Studio Brentegani
Via Crocetta, 14, Sommacampagna (VR) | Via della Pietà, 12, Trieste
3495633621 – ivano.brentegani@gmail.com – ivano.brentegani@ingpec.eu

PROGETTO:

COMUNE DI PIACENZA
SERVIZIO INFRASTRUTTURE E LAVORI PUBBLICI

AFFIDAMENTO DIRETTO DI SERVIZI DI INGEGNERIA E ARCHITETTURA INERENTI PROGETTAZIONE DEFINITIVA ED ESECUTIVA, DIREZIONE LAVORI, COORDINAMENTO DELLA SICUREZZA IN FASE DI PROGETTAZIONE ED ESECUZIONE E REDAZIONE CERTIFICATO DI REGOLARE ESECUZIONE DEGLI INTERVENTI DI RECUPERO FUNZIONALE PONTE AD ARCO IN MURATURA DI VIA COLOMBO - PIACENZA ALL' ING. IVANO BRENTEGANI
DETERMINAZIONE DIRIGENZIALE n.2090 del 22/09/2022
CUP: E33D22000690004
CUI: S00229080338202200062
CIG: ZA837D672F

OGGETTO: RECUPERO FUNZIONALE PONTE AD ARCO IN MURATURA – VIA COLOMBO PIACENZA

GST01 – RELAZIONE SISMICA E SULLE STRUTTURE

Ing. Ivano Brentegani
Ordine Ingegneri Verona A4126

Emissione 00: novembre 2022

INDICE

1. PREMESSE

Oggetto della presente relazione di calcolo è la strutture in carpenteria metallica necessaria per il recupero funzionale del ponte ad arco in muratura sito in Via Colombo, nel Comune di Piacenza (PC) identificato nella rappresentazione a seguire.
Attualmente la struttura è risultata non adatta a sostenere i carichi derivati dal traffico veicolare di Via Colombo, come esplicitato all'interno della relazione della valutazione della sicurezza redatta dall'ing. Stefano Rossi nel documento REL-2-01-0 del 20.05.2020.
Attualmente l'intradosso del ponte è interdetto all'accesso mediante elementi prefabbricati in c.a.p.
Il rilievo dei manufatti è quindi quello realizzato da parte dell'ing. Stefano Rossi all'interno del documento ST-2-01-0 di data 02.12.2019.
L'intradosso del ponte, verso via Edoardo Marcolini, come indicato dalla Committenza, risulta chiusa da un muro in conglomerato cementizio armato che sorregge un terrapieno adibito a parco nell'area che confina con via Edoardo Marcolini.

Figura 1 - inquadramento area di interesse.

2. NORMATIVA

D.Min. Infrastrutture Min. Interni e Prot. Civile 17 Gennaio 2018 e allegate "Norme tecniche per le costruzioni".
Circolare 21/01/19, n. 7 C.S.LL.PP "Istruzioni per l'applicazione dell'aggiornamento delle Norme Tecniche delle Costruzioni di cui al decreto ministeriale 17 gennaio 2018"
D.Min. Infrastrutture e trasporti 14 Settembre 2005 e allegate "Norme tecniche per le costruzioni".
D.M. LL.PP. 9 Gennaio 1996 "Norme tecniche per il calcolo, l'esecuzione ed il collaudo delle strutture in cemento armato, normale e precompresso e per le strutture metalliche".
D.M. LL.PP. 16 Gennaio 1996 "Norme tecniche relative ai <<Criteri generali per la verifica di sicurezza delle costruzioni e dei carichi e sovraccarichi>>".
D.M. LL.PP. 16 Gennaio 1996 "Norme tecniche per le costruzioni in zone sismiche".
Circolare 4/07/96, n.156AA.GG./STC. istruzioni per l'applicazione delle "Norme tecniche relative ai <<Criteri generali per la verifica di sicurezza delle costruzioni e dei carichi e sovraccarichi>>" di cui al D.M. 16/01/96.
Circolare 10/04/97, n.65AA.GG. istruzioni per l'applicazione delle "Norme tecniche per le costruzioni in zone sismiche" di cui al D.M. 16/01/96.
D.M. LL.PP. 20 Novembre 1987 "Norme tecniche per la progettazione, esecuzione e collaudo degli edifici in muratura e per il loro consolidamento".

Circolare 4 Gennaio 1989 n. 30787 "Istruzioni in merito alle norme tecniche per la progettazione, esecuzione e collaudo degli edifici in muratura e per il loro consolidamento".
D.M. LL.PP. 11 Marzo 1988 "Norme tecniche riguardanti le indagini sui terreni e sulle rocce, la stabilità dei pendii naturali e delle scarpate, i criteri generali e le prescrizioni per la progettazione, l'esecuzione e il collaudo delle opere di sostegno delle terre e delle opere di fondazione".
D.M. LL.PP. 3 Dicembre 1987 "Norme tecniche per la progettazione, esecuzione e collaudo delle costruzioni prefabbricate".
UNI 9502 - Procedimento analitico per valutare la resistenza al fuoco degli elementi costruttivi di conglomerato cementizio armato, normale e precompresso - edizione maggio 2001
Ordinanza del Presidente del Consiglio dei Ministri n. 3274 del 20 marzo 2003 "Primi elementi in materia di criteri generali per la classificazione sismica del territorio nazionale e di normative tecniche per le costruzioni in zona sismica" e successive modificazioni e integrazioni.
UNI EN 1990:2006 13/04/2006 Eurocodice 0 - Criteri generali di progettazione strutturale.
UNI EN 1991-1-1:2004 01/08/2004 Eurocodice 1 - Azioni sulle strutture - Parte 1-1: Azioni in generale - Pesi per unità di volume, pesi propri e sovraccarichi per gli edifici.
UNI EN 1991-2:2005 01/03/2005 Eurocodice 1 - Azioni sulle strutture - Parte 2: Carichi da traffico sui ponti.
UNI EN 1991-1-3:2004 01/10/2004 Eurocodice 1 - Azioni sulle strutture - Parte 1-3: Azioni in generale - Carichi da neve.
UNI EN 1991-1-4:2005 01/07/2005 Eurocodice 1 - Azioni sulle strutture - Parte 1-4: Azioni in generale - Azioni del vento.
UNI EN 1991-1-5:2004 01/10/2004 Eurocodice 1 - Azioni sulle strutture - Parte 1-5: Azioni in generale - Azioni termiche.
UNI EN 1992-1-1:2005 24/11/2005 Eurocodice 2 - Progettazione delle strutture di calcestruzzo - Parte 1-1: Regole generali e regole per gli edifici.
UNI EN 1992-1-2:2005 01/04/2005 Eurocodice 2 - Progettazione delle strutture di calcestruzzo - Parte 1-2: Regole generali - Progettazione strutturale contro l'incendio.
UNI EN 1993-1-1:2005 01/08/2005 Eurocodice 3 - Progettazione delle strutture di acciaio - Parte 1-1: Regole generali e regole per gli edifici.
UNI EN 1993-1-8:2005 01/08/2005 Eurocodice 3 - Progettazione delle strutture di acciaio - Parte 1-8: Progettazione dei collegamenti.
UNI EN 1994-1-1:2005 01/03/2005 Eurocodice 4 - Progettazione delle strutture composte acciaio-calcestruzzo - Parte 1-1: Regole generali e regole per gli edifici.
UNI EN 1994-2:2006 12/01/2006 Eurocodice 4 - Progettazione delle strutture composte acciaio-calcestruzzo - Parte 2: Regole generali e regole per i ponti.
UNI EN 1995-1-1:2005 01/02/2005 Eurocodice 5 - Progettazione delle strutture di legno - Parte 1-1: Regole generali – Regole comuni e regole per gli edifici.
UNI EN 1995-2:2005 01/01/2005 Eurocodice 5 - Progettazione delle strutture di legno - Parte 2: Ponti.
UNI EN 1996-1-1:2006 26/01/2006 Eurocodice 6 - Progettazione delle strutture di muratura - Parte 1-1: Regole generali per strutture di muratura armata e non armata.
UNI EN 1996-3:2006 09/03/2006 Eurocodice 6 - Progettazione delle strutture di muratura - Parte 3: Metodi di calcolo semplificato per strutture di muratura non armata.
UNI EN 1997-1:2005 01/02/2005 Eurocodice 7 - Progettazione geotecnica - Parte 1: Regole generali.
UNI EN 1998-1:2005 01/03/2005 Eurocodice 8 - Progettazione delle strutture per la resistenza sismica - Parte 1: Regole generali, azioni sismiche e regole per gli edifici.
UNI EN 1998-3:2005 01/08/2005 Eurocodice 8 - Progettazione delle strutture per la resistenza sismica - Parte 3: Valutazione e adeguamento degli edifici.
UNI EN 1998-5:2005 01/01/2005 Eurocodice 8 - Progettazione delle strutture per la resistenza sismica - Parte 5: Fondazioni, strutture di contenimento ed aspetti geotecnici.

3. DOCUMENTAZIONE DI RIFERIMENTO

Per l'opera in oggetto si è ricevuta la documentazione rifeeria alla valutazione della sicurezza redatta dall'ing. Stefano Rossi nel mese di maggio 2020 ed il rilievo della struttura redatta dall'ing. Stefano Rossi nel mese di dicembre 2019.

4. DESCRIZIONE DELLE OPERE

L'opera che si intende realizzare a carico della struttura esistente, è rappresentato da un sistema di centinatura fissa in acciaio allo scopo di sorreggere a rafforzare la struttura esistente.
Come da viabilità superficiale, l'area intradossale del ponte, è stata suddivisa in 4 parti distinte:

- marciapiede non protetto da sicurvia:
- parcheggio;
- corsia di tranaito;
- marciapiede protetto da sicurvia.

per rispondere alle differenze applicazioni del carico, l'intervento prevede la giustapposizione di numero due tipologie di elementi in carpenteria metallica secondo le metodologie riportate all'interno delle tavole progettuali allegate alla presente.

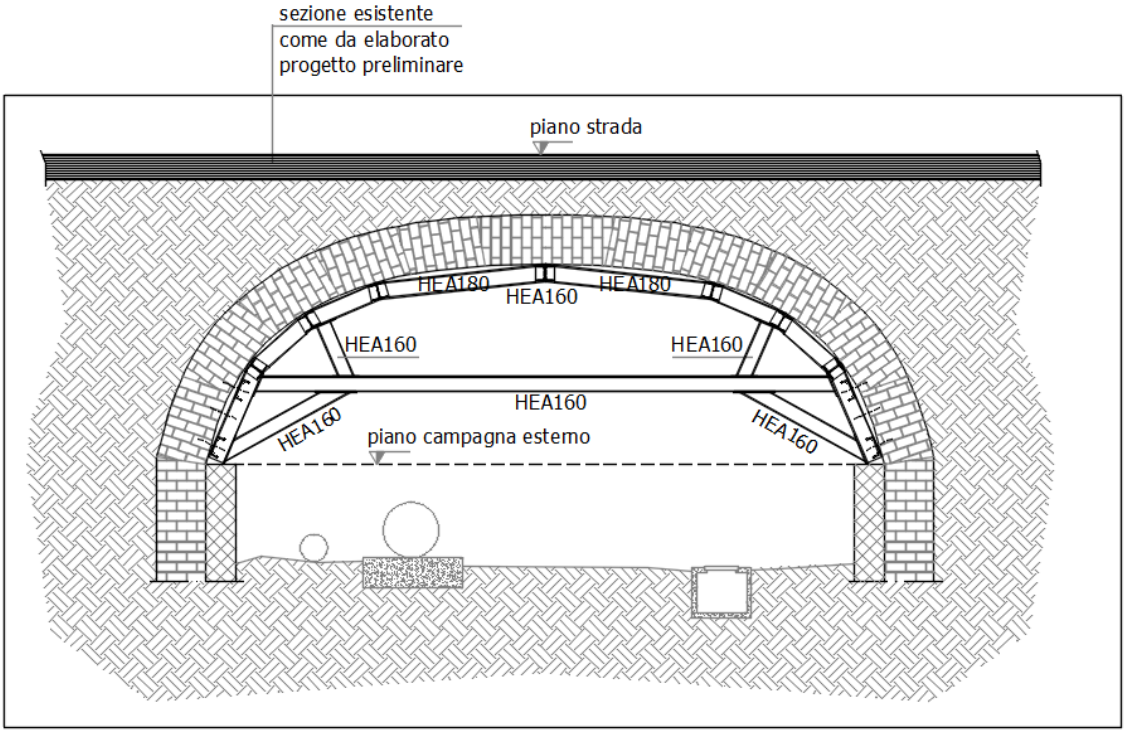

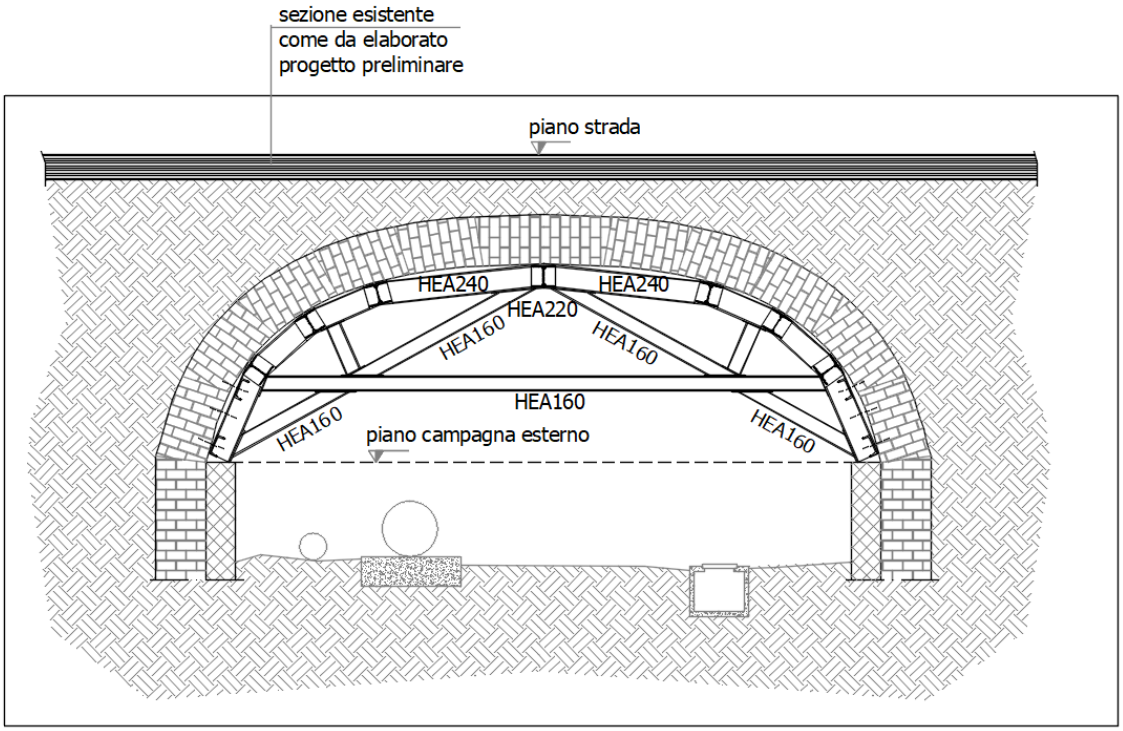

5. CARATTERISTICHE DEI MATERIALI

- **SPECIFICHE DEI MATERIALI NUOVI**

5.1. CLASSE DI ESECUZIONE

Si identifica la classe di esecuzione secondo le seguenti modalità:

Prospetto B.1 – Definizione della classe di conseguenze		
Classe di conseguenze	Descrizione	Esempi di edifici e di opere di ingegneria civile
CC3	Elevate conseguenze per perdita di vite umane, o conseguenze molto gravi in termini economici, sociali o ambientali	Gradinate in impianti sportivi, edifici pubblici nei quali le conseguenze del collasso sono alte (per esempio, una sala concerti)
CC2	Conseguenze medie per perdita di vite umane, conseguenze considerevoli in termini economici, sociali o ambientali	Edifici residenziali e per uffici, edifici pubblici nei quali le conseguenze del collasso sono medie (per esempio un edificio per uffici)
CC1	Conseguenze basse per perdita di vite umane, e conseguenze modeste o trascurabili in termini economici, sociali o ambientali	Costruzioni agricole, nei quali generalmente nessuno entra (per esempio, i magazzini), serre

Table C.1 - Choice of execution class (EXC)		
Reliability Class (RC) or Consequences Class (CC)	Type of loading	
	Static, quasi-static or seismic DCL[a]	Fatigue[b] or seismic DCM or DCH[a]
RC3 or CC3	EXC3[c]	EXC3[c]
RC2 or CC2	EXC2	EXC3
RC1 or CC1	EXC1	EXC2
[a] Seismic ductility classes are defined in EN 1998-1: Low=DCL; Medium=DCM; High=DCH. [b] See EN 1993-1-9. [c] EXC4 may be specify for structures with extreme consequences of structural failure.		

vista la classe delle conseguenze la classe di esecuzione è la classe **EXC3**.

5.1.2 Acciai

5.1.2.1 Proprietà acciai base

Descrizione: *descrizione o nome assegnato all'elemento.*
E: *modulo di elasticità longitudinale del materiale per edifici o materiali nuovi. [daN/cm²]*
G: *modulo di elasticità tangenziale del materiale, viene impiegato nella modellazione di aste e di elementi guscio a comportamento ortotropo. [daN/cm²]*
v: *coefficiente di Poisson. Il valore è adimensionale.*
γ: *peso specifico del materiale. [daN/cm³]*
α: *coefficiente longitudinale di dilatazione termica. [°C-1]*

Descrizione	E	G	v	γ	α
S275	2100000	Default (807692.31)	0.3	0.00785	0.000012

5.1.2.2 Proprietà acciai CNR 10011

Descrizione: *descrizione o nome assegnato all'elemento.*
Tipo: *descrizione per norma.*
fy(s<=40 mm): *resistenza di snervamento fy per spessori <=40 mm. [daN/cm²]*
fy(s>40 mm): *resistenza di snervamento fy per spessori >40 mm. [daN/cm²]*
fu(s<=40 mm): *resistenza di rottura per trazione fu per spessori <=40 mm. [daN/cm²]*

***fu(s>40 mm)**: resistenza di rottura per trazione fu per spessori >40 mm. [daN/cm²]*
***Prosp. Omega**: prospetto per coefficienti Omega.*
***σ amm.(s<=40 mm)**: σ ammissibile per spessori <=40 mm. [daN/cm²]*
***σ amm.(s>40 mm)**: σ ammissibile per spessori >40 mm. [daN/cm²]*
***fd(s<=40 mm)**: resistenza di progetto fd per spessori <=40 mm. [daN/cm²]*
***fd(s>40 mm)**: resistenza di progetto fd per spessori >40 mm. [daN/cm²]*

Descrizione	Tipo	fy(s<=40 mm)	fy(s>40 mm)	fu(s<=40 mm)	fu(s>40 mm)	Prosp. Omega	σ amm.(s<=40 mm)	σ amm.(s>40 mm)	fd(s<=40 mm)	fd(s>40 mm)
S275	FE430	2750	2550	4300	4100	III	1900	1700	2750	2500

5.1.2.3 Proprietà acciai CNR 10022

***Descrizione**: descrizione o nome assegnato all'elemento.*
***Tipo**: descrizione per norma.*
***fy**: resistenza di snervamento fy. [daN/cm²]*
***fu**: resistenza di rottura fu. [daN/cm²]*
***fd**: resistenza di progetto fd. [daN/cm²]*
***Prospetto omega sag.fr.(s<3mm)**: prospetto coeff. omega per spessori < 3 mm.*
***Prospetto omega sag.fr.(s>=3mm)**: prospetto coeff. omega per spessori >= 3 mm.*
***Prospetti σ crit. Eulero**: prospetti σ critiche euleriane.*

Descrizione	Tipo	fy	fu	fd	Prospetto omega sag.fr.(s<3mm)	Prospetto omega sag.fr.(s>=3mm)	Prospetti σ crit. Eulero
S275	FE430	2750	4300	2750	d	e	I

5.1.2.4 Proprietà acciai EC3

***Descrizione**: descrizione o nome assegnato all'elemento.*
***Tipo**: descrizione per norma.*
***fy(s<=40 mm)**: resistenza di snervamento fy per spessori <=40 mm. [daN/cm²]*
***fy(s>40 mm)**: resistenza di snervamento fy per spessori >40 mm. [daN/cm²]*
***fu(s<=40 mm)**: resistenza di rottura per trazione fu per spessori <=40 mm. [daN/cm²]*
***fu(s>40 mm)**: resistenza di rottura per trazione fu per spessori >40 mm. [daN/cm²]*

Descrizione	Tipo	fy(s<=40 mm)	fy(s>40 mm)	fu(s<=40 mm)	fu(s>40 mm)
S275	S275	2750	2550	4300	4100

5.2 SEZIONI

5.2.1 Sezioni in acciaio

5.2.1.1 Profili singoli in acciaio

5.2.1.1.1 HEA - HEM - HEB - IPE

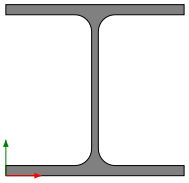

***Descrizione**: descrizione o nome assegnato all'elemento.*
***Sup.**: superficie bagnata per unità di lunghezza. [mm]*
***Area Tx FEM**: area di taglio in direzione X per l'analisi FEM. [mm²]*
***Area Ty FEM**: area di taglio in direzione Y per l'analisi FEM. [mm²]*
***JxFEM**: momento di inerzia attorno all'asse X per l'analisi FEM. [mm4]*
***JyFEM**: momento di inerzia attorno all'asse Y per l'analisi FEM. [mm4]*
***JtFEM**: momento d'inerzia torsionale corretto con il fattore di forma per l'analisi FEM. [mm4]*
***b**: larghezza dell'ala. [mm]*
***h**: altezza del profilo. [mm]*
***s**: spessore dell'anima. [mm]*
***t**: spessore delle ali. [mm]*
***r**: raggio del raccordo ala-anima. [mm]*
***f**: truschino. [mm]*

Descrizione	Sup.	Area Tx FEM	Area Ty FEM	JxFEM	JyFEM	JtFEM	b	h	s	t	r	f
HEA160	906.1	2400	858	16747032	6156152	87408	160	152	6	9	15	88

Descrizione	Sup.	Area Tx FEM	Area Ty FEM	JxFEM	JyFEM	JtFEM	b	h	s	t	r	f
HEA180	1024.1	2850	969	25125509	9246467	113829	180	171	6	9.5	15	99
HEA220	1254.9	4033	1393	54147141	19546471	216708	220	210	7	11	18	130
HEA240	1368.7	4800	1635	77712997	27689611	305449	240	230	7.5	12	21	150

5.2.1.1.2 UPN

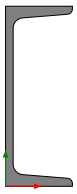

***Descrizione**: descrizione o nome assegnato all'elemento.*
***Sup.**: superficie bagnata per unità di lunghezza. [mm]*
***Area Tx FEM**: area di taglio in direzione X per l'analisi FEM. [mm²]*
***Area Ty FEM**: area di taglio in direzione Y per l'analisi FEM. [mm²]*
***JxFEM**: momento di inerzia attorno all'asse X per l'analisi FEM. [mm4]*
***JyFEM**: momento di inerzia attorno all'asse Y per l'analisi FEM. [mm4]*
***JtFEM**: momento d'inerzia torsionale corretto con il fattore di forma per l'analisi FEM. [mm4]*
***b**: larghezza dell'ala. [mm]*
***h**: altezza del profilo. [mm]*
***s**: spessore dell'anima. [mm]*
***t**: spessore delle ali. [mm]*
***r**: raggio del raccordo ala-anima. [mm]*
***f**: truschino. [mm]*
***r1**: raggio dello smusso delle ali. [mm]*
***p%**: pendenza delle ali. Il valore è adimensionale.*
***z**: posizione in cui viene misurato lo spessore delle ali. [mm]*

Descrizione	Sup.	Area Tx FEM	Area Ty FEM	JxFEM	JyFEM	JtFEM	b	h	s	t	r	f	r1	p%	z
UPN200	660.3	1754	1700	1.9E7	1.5E6	107431	75	200	8.5	11.5	11.5	45	6	8	37.5

5.2.1.2 Caratteristiche inerziali sezioni in acciaio

5.2.1.2.1 Caratteristiche inerziali principali sezioni in acciaio

***Descrizione**: descrizione o nome assegnato all'elemento.*
***Xg**: coordinata X del baricentro. [cm]*
***Yg**: coordinata Y del baricentro. [cm]*
***Area**: area inerziale nel sistema geometrico centrato nel baricentro. [cm²]*
***Jx**: momento d'inerzia attorno all'asse orizzontale baricentrico di definizione della sezione. [cm4]*
***Jy**: momento d'inerzia attorno all'asse verticale baricentrico di definizione della sezione. [cm4]*
***Jxy**: momento centrifugo rispetto al sistema di riferimento baricentrico di definizione della sezione. [cm4]*
***Jm**: momento d'inerzia attorno all'asse baricentrico principale M. [cm4]*
***Jn**: momento d'inerzia attorno all'asse baricentrico principale N. [cm4]*
***α X su M**: angolo tra gli assi del sistema di riferimento geometrico di definizione e quelli del sistema di riferimento principale. [deg]*
***Jt**: momento d'inerzia torsionale corretto con il fattore di forma. [cm4]*

Descrizione	Xg	Yg	Area	Jx	Jy	Jxy	Jm	Jn	α X su M	Jt
HEA160	8	7.6	38.82	1674.7	615.62	0	1674.7	615.62	0	8.74
HEA180	9	8.55	45.3	2512.55	924.65	0	2512.55	924.65	0	11.38
HEA220	11	10.5	64.41	5414.71	1954.65	0	5414.71	1954.65	0	21.67
HEA240	12	11.5	76.92	7771.3	2768.96	0	7771.3	2768.96	0	30.54
UPN200	2.01	10	32.19	1911.41	147.68	0	1911.41	147.68	0	10.74

5.2.1.2.2 Caratteristiche inerziali momenti sezioni in acciaio

***Descrizione**: descrizione o nome assegnato all'elemento.*
***ix**: raggio di inerzia relativo all'asse x. [cm]*
***iy**: raggio di inerzia relativo all'asse y. [cm]*
***im**: raggio di inerzia relativo all'asse principale m. [cm]*
***in**: raggio di inerzia relativo all'asse principale n. [cm]*
***Sx**: momento statico relativo all'asse x. [cm³]*
***Sy**: momento statico relativo all'asse y. [cm³]*
***Wx**: modulo di resistenza elastico minimo relativo all'asse x. [cm³]*
***Wy**: modulo di resistenza elastico minimo relativo all'asse y. [cm³]*
***Wm**: modulo di resistenza elastico minimo relativo all'asse principale m. [cm³]*
***Wn**: modulo di resistenza elastico minimo relativo all'asse principale n. [cm³]*
***Wplx**: modulo di resistenza plastico relativo all'asse x. [cm³]*

***Wply**: modulo di resistenza plastico relativo all'asse y. [cm³]*

Descrizione	ix	iy	im	in	Sx	Sy	Wx	Wy	Wm	Wn	Wplx	Wply
HEA160	6.57	3.98	6.57	3.98	122.71	58.84	220.36	76.95	220.36	76.95	245.43	117.67
HEA180	7.45	4.52	7.45	4.52	162.59	78.27	293.87	102.74	293.87	102.74	325.17	156.53
HEA220	9.17	5.51	9.17	5.51	284.51	135.33	515.69	177.7	515.69	177.7	569.03	270.66
HEA240	10.05	6	10.05	6	372.74	175.9	675.77	230.75	675.77	230.75	745.47	351.79
UPN200	7.71	2.14	7.71	2.14	113.91	29.28	191.14	26.92	191.14	26.92	227.82	51.87

5.2.1.2.3 Caratteristiche inerziali taglio sezioni in acciaio

***Descrizione**: descrizione o nome assegnato all'elemento.*
***Atx**: area a taglio lungo x. [cm²]*
***Aty**: area a taglio lungo y. [cm²]*

Descrizione	Atx	Aty
HEA160	28.8	9.12
HEA180	34.2	10.26
HEA220	48.4	14.7
HEA240	57.6	17.25
UPN200	17.54	17

5.3 TERRENI

***Descrizione**: descrizione o nome assegnato all'elemento.*
***Natura geologica**: natura geologica del terreno (granulare, coesivo, roccia).*
***Coesione (c')**: coesione efficace del terreno. [daN/cm²]*
***Coesione non drenata (Cu)**: coesione non drenata (Cu) del terreno, per terreni eminentemente coesivi. [daN/cm²]*
***Angolo di attrito interno φ**: angolo di attrito interno del terreno. [deg]*
***Angolo di attrito di interfaccia δ**: angolo di attrito all'interfaccia tra terreno-cls. [deg]*
***Coeff. α di adesione della coesione (0;1)**: coeff. di adesione della coesione all'interfaccia terreno-cls, compreso tra 0 ed 1. Il valore è adimensionale.*
***Coeff. di spinta K0**: coefficiente di spinta a riposo del terreno. Il valore è adimensionale.*
***γ naturale**: peso specifico naturale del terreno in sito, assegnato alle zone non immerse. [daN/cm³]*
***γ saturo**: peso specifico saturo del terreno in sito, assegnato alle zone immerse. [daN/cm³]*
***E**: modulo elastico longitudinale del terreno. [daN/cm²]*
***v**: coefficiente di Poisson del terreno. Il valore è adimensionale.*
***Qualità roccia RQD (0;1)**: rock quality degree. Indice di qualità della roccia, assume valori nell'intervallo (0;1). Il valore è adimensionale.*

Descrizione	Natura geologica	Coesione (c')	Coesione non drenata (Cu)	Angolo di attrito interno φ	Angolo di attrito di interfaccia δ	Coeff. α di adesione della coesione (0;1)	Coeff. di spinta K0	γ naturale	γ saturo	E	v	Qualità roccia RQD (0;1)
sabbia media limosa debolmente ghiaiosa	Granulare incoerente (Sabbie)	0	0	24	20	1	0.59	0.00185	0.00205	75	0.3	0

6 DATI DI DEFINIZIONE

6.1 PREFERENZE COMMESSA

6.1.1 Preferenze di analisi

Metodo di analisi	D.M. 17-01-18 (N.T.C.)	
Tipo di costruzione	2 - Costruzioni con livelli di prestazioni ordinari	
Vn	50	
Classe d'uso	IV	
Vr	100	
Tipo di analisi	Lineare dinamica	
Località	Piacenza; Latitudine ED50 45.0477° (45° 2' 52''); Longitudine ED50 9.7004° (9° 42' 1''); Altitudine s.l.m. 60.17 m.	
Categoria del suolo	A - Ammassi rocciosi affioranti o terreni molto rigidi	
Categoria topografica	T1 - Superficie pianeggiante, pendii e rilievi isolati con inclinazione media i<=15°	
Ss orizzontale SLO	1	
Tb orizzontale SLO	0.079	[s]
Tc orizzontale SLO	0.236	[s]
Td orizzontale SLO	1.768	[s]
Ss orizzontale SLD	1	
Tb orizzontale SLD	0.087	[s]
Tc orizzontale SLD	0.26	[s]
Td orizzontale SLD	1.807	[s]
Ss orizzontale SLV	1	
Tb orizzontale SLV	0.098	[s]
Tc orizzontale SLV	0.294	[s]
Td orizzontale SLV	2.072	[s]

St	1	
PVr SLO (%)	81	
Tr SLO	60.21	
Ag/g SLO	0.0419	
Fo SLO	2.556	
Tc* SLO	0.236	[s]
PVr SLD (%)	63	
Tr SLD	101	
Ag/g SLD	0.0516	
Fo SLD	2.554	
Tc* SLD	0.26	[s]
PVr SLV (%)	10	
Tr SLV	949.12	
Ag/g SLV	0.1179	
Fo SLV	2.5	
Tc* SLV	0.294	[s]
Smorzamento viscoso (%)	5	
Classe di duttilità	Non dissipativa	
Rotazione del sisma	0	[deg]
Quota dello '0' sismico	0	[cm]
Regolarità in pianta	Si	
Regolarità in elevazione	Si	
Edificio acciaio	Si	
Edificio esistente	No	
Altezza costruzione	0	[cm]
T1,x	0.21485	[s]
T1,y	1.88555	[s]
λ SLO,x	0.85	
λ SLO,y	1	
λ SLD,x	0.85	
λ SLD,y	1	
λ SLV,x	0.85	
λ SLV,y	1	
Numero modi	3	
Metodo di Ritz	applicato	
Limite spostamenti interpiano SLD	0.005	
Fattore di comportamento per sisma SLD X	1.5	
Fattore di comportamento per sisma SLD Y	1.5	
Fattore di comportamento per sisma SLV X	1.5	
Fattore di comportamento per sisma SLV Y	1.5	
Coefficiente di sicurezza per carico limite (fondazioni superficiali)	2.3	
Coefficiente di sicurezza per scorrimento (fondazioni superficiali)	1.1	
Coefficiente di sicurezza portanza verticale pali infissi, punta	1.15	
Coefficiente di sicurezza portanza verticale pali infissi, laterale compressione	1.15	
Coefficiente di sicurezza portanza verticale pali infissi, laterale trazione	1.25	
Coefficiente di sicurezza portanza verticale pali trivellati, punta	1.35	
Coefficiente di sicurezza portanza verticale pali trivellati, laterale compressione	1.15	
Coefficiente di sicurezza portanza verticale pali trivellati, laterale trazione	1.25	
Coefficiente di sicurezza portanza verticale micropali, punta	1.35	
Coefficiente di sicurezza portanza verticale micropali, laterale compressione	1.15	
Coefficiente di sicurezza portanza verticale micropali, laterale trazione	1.25	
Coefficiente di sicurezza portanza trasversale pali	1.3	
Fattore di correlazione resistenza caratteristica dei pali in base alle verticali indagate	1.7	
Coefficiente di sicurezza per ribaltamento (plinti superficiali)	1.15	
Combinazioni analisi statica non lineare.	Componenti orizzontali separate secondo Circolare 7 21-01-19 §C7.3.5	
Calcola I.R. per elementi nuovi	No	

6.1.2 Spettri D.M. 17-01-18

Acc./g: *Accelerazione spettrale normalizzata ottenuta dividendo l'accelerazione spettrale per l'accelerazione di gravità.*
Periodo: *Periodo di vibrazione.*

Spettro di risposta elastico in accelerazione delle componenti orizzontali SLO § 3.2.3.2.1 [3.2.2]

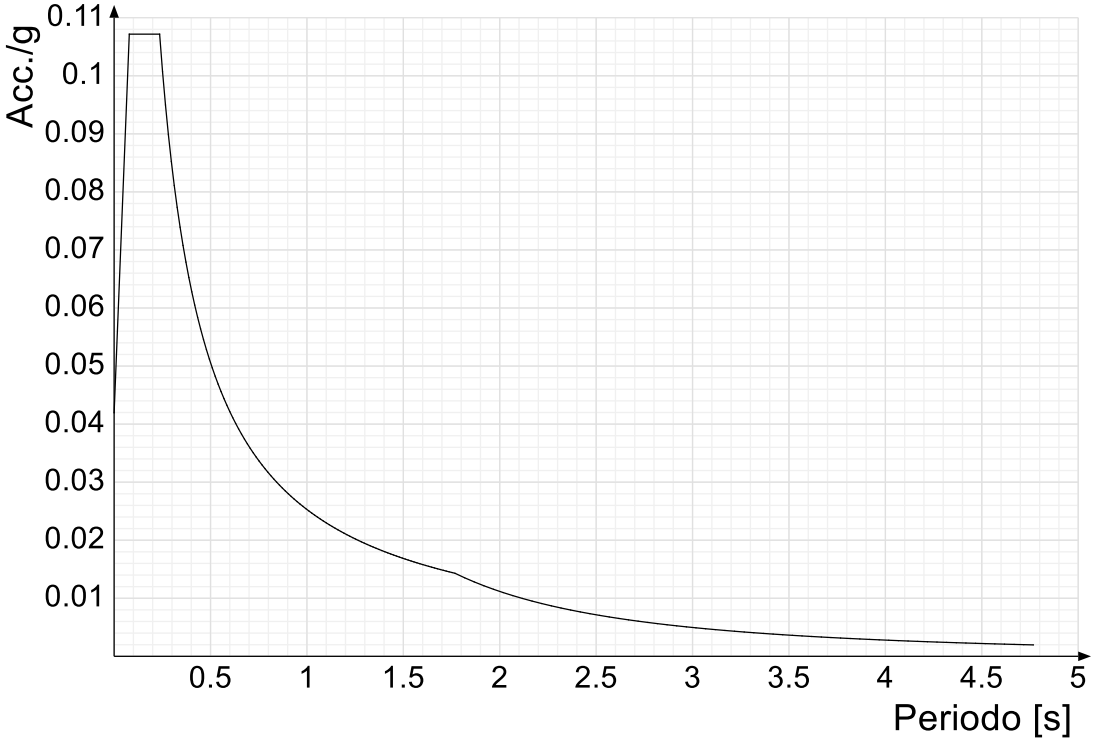

Spettro di risposta elastico in accelerazione delle componenti orizzontali SLD § 3.2.3.2.1 [3.2.2]

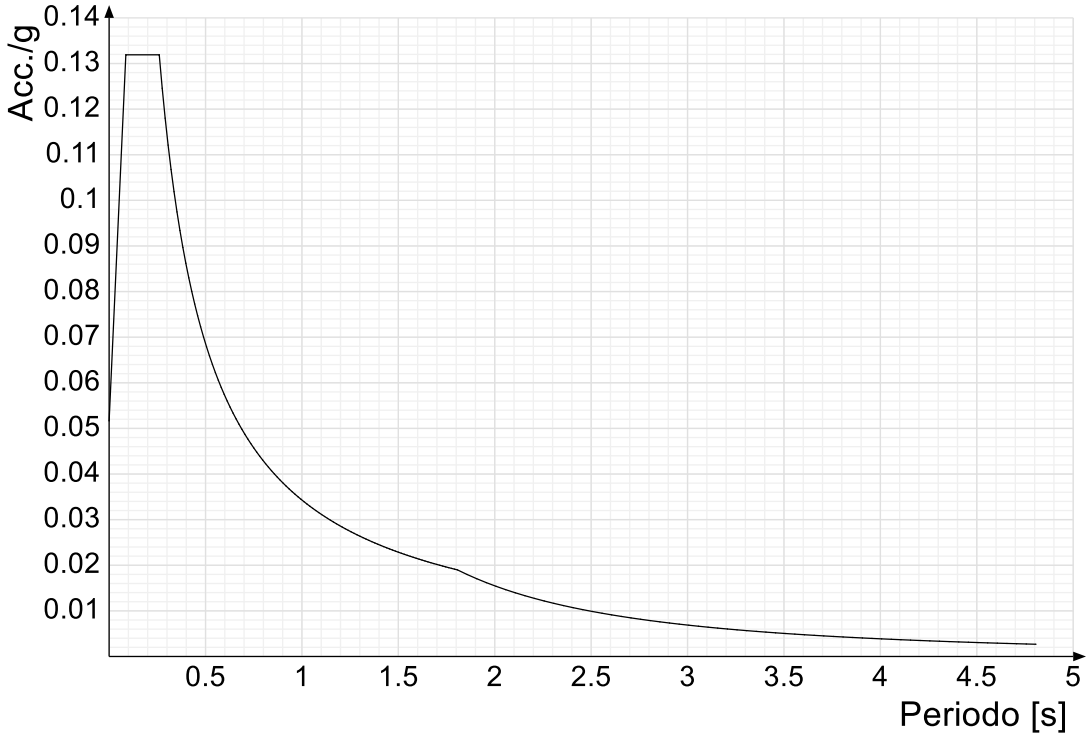

Spettro di risposta elastico in accelerazione delle componenti orizzontali SLV § 3.2.3.2.1 [3.2.2]

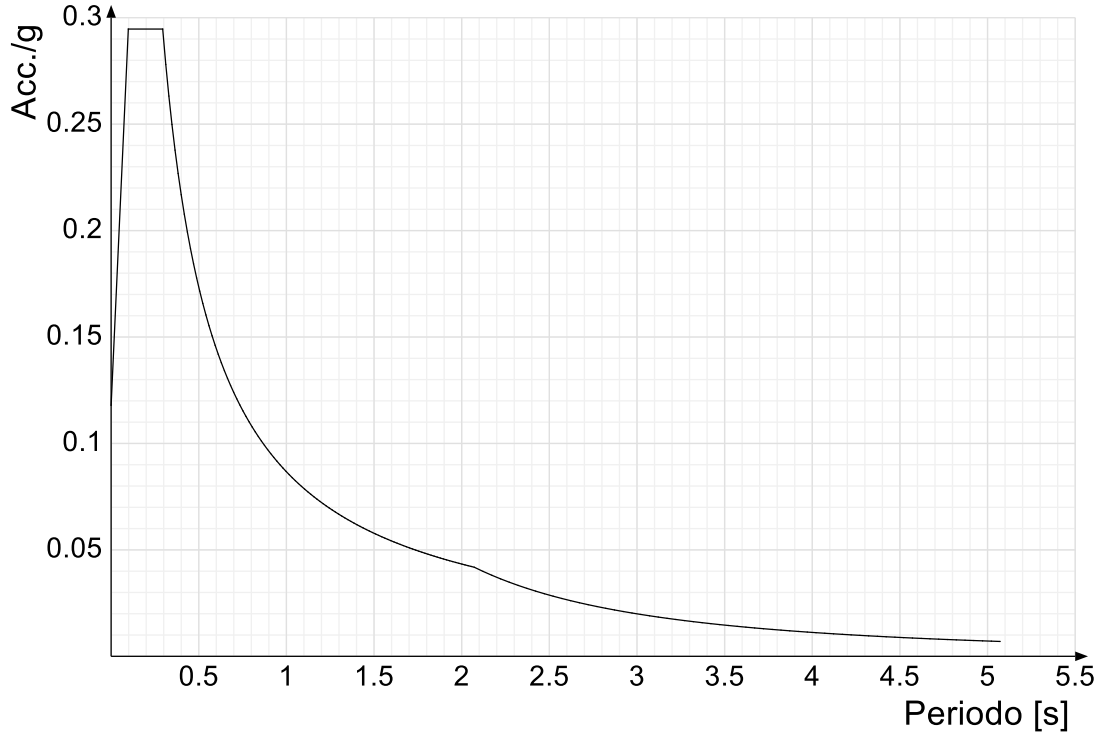

Spettro di risposta di progetto in accelerazione delle componenti orizzontali SLO § 3.2.3.4

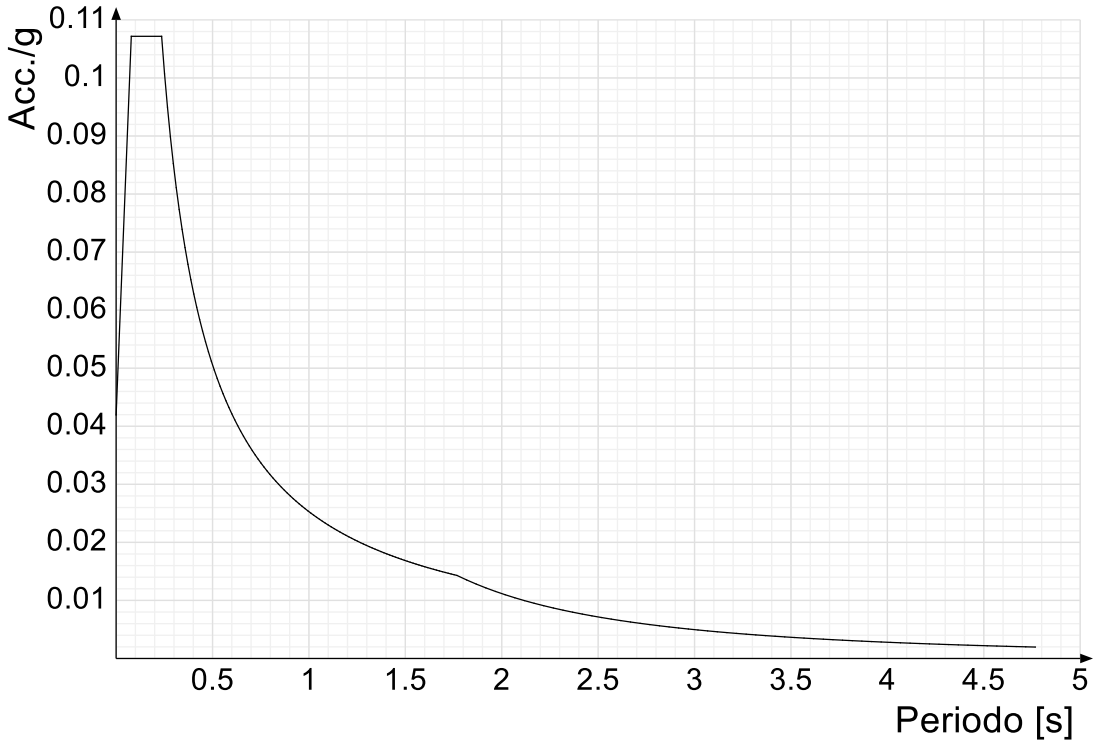

Spettro di risposta di progetto in accelerazione della componente X SLD § 3.2.3.5

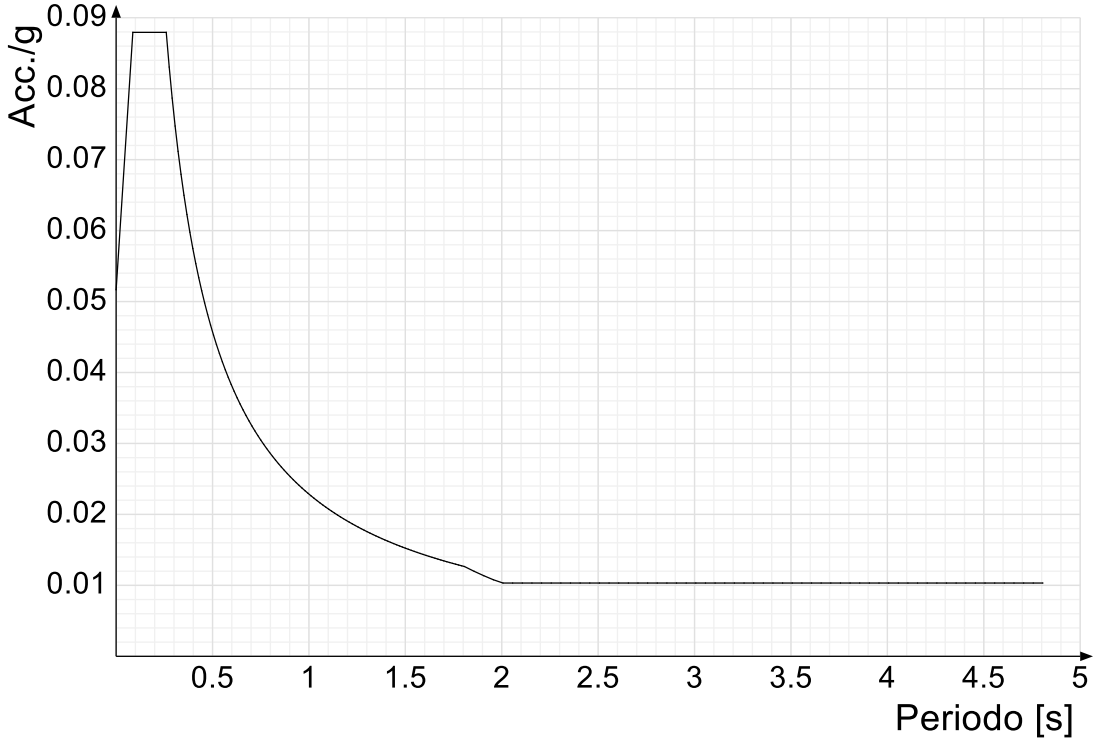

Spettro di risposta di progetto in accelerazione della componente Y SLD § 3.2.3.5

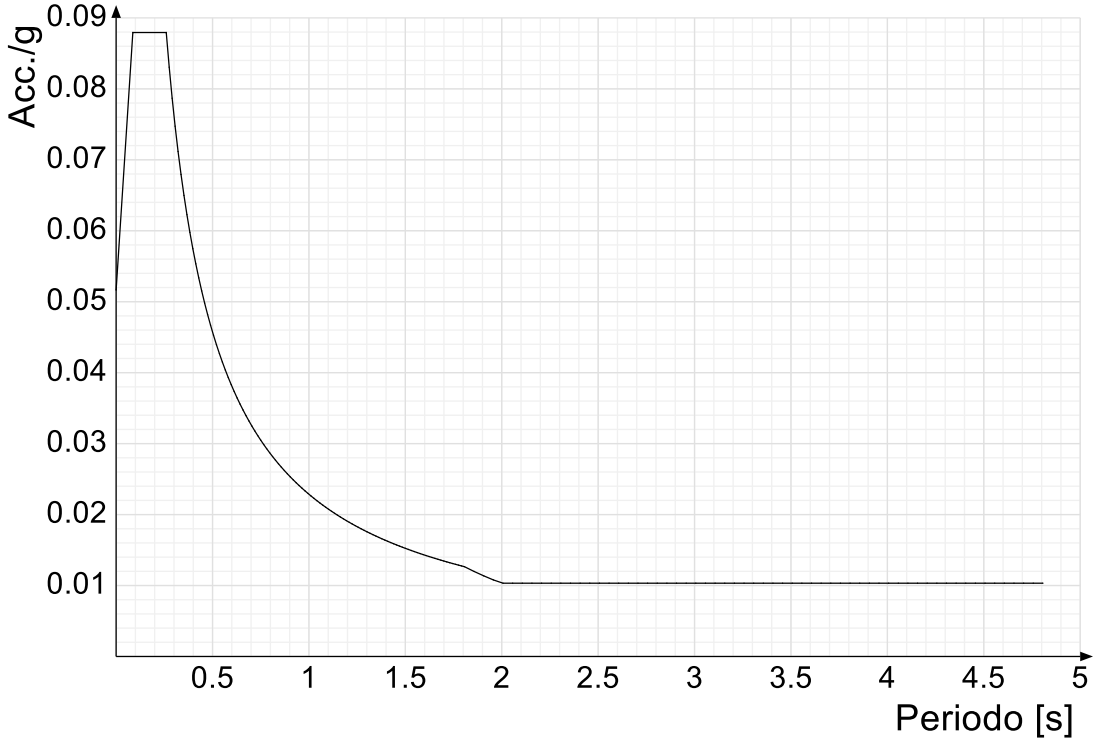

Spettro di risposta di progetto in accelerazione della componente X SLV § 3.2.3.5

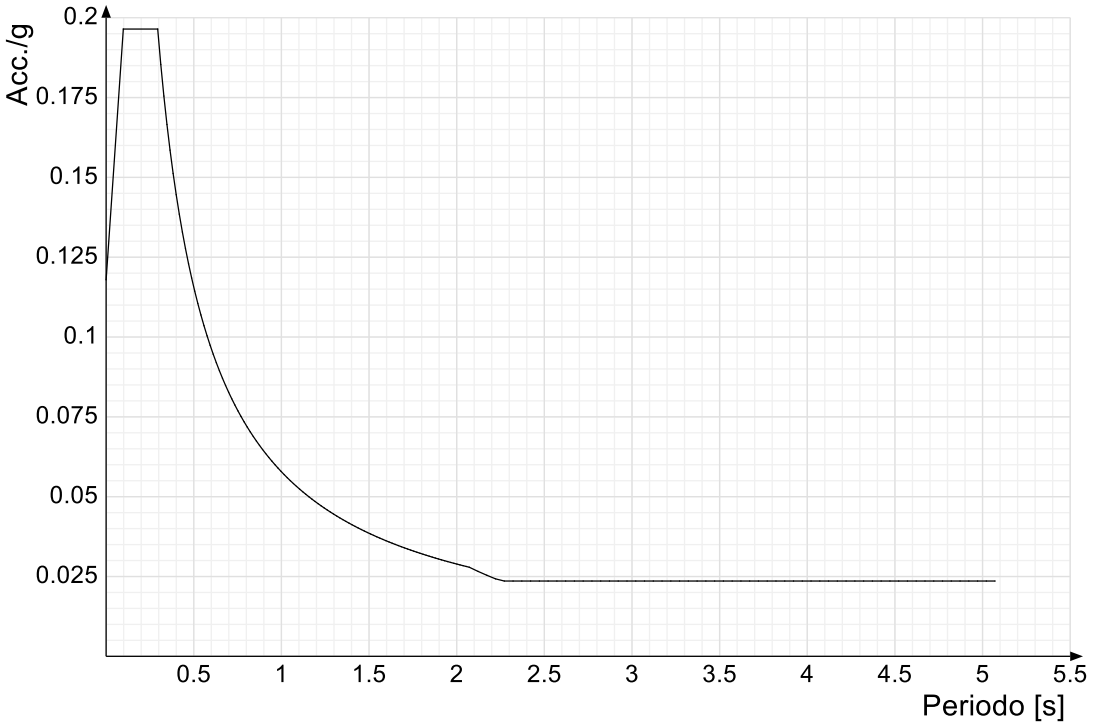

Spettro di risposta di progetto in accelerazione della componente Y SLV § 3.2.3.5

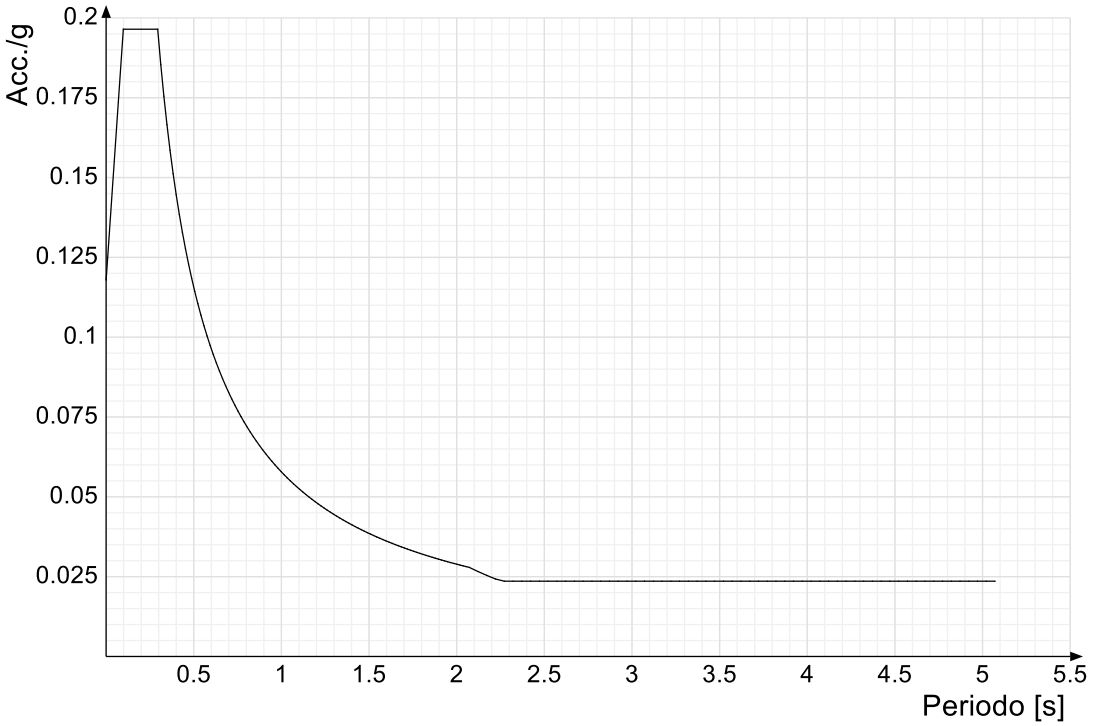

Confronti spettri SLV-SLD

Vengono confrontati lo spettro Spettro di risposta di progetto in accelerazione della componente X SLD § 3.2.3.5 (di colore rosso) e Spettro di risposta di progetto in accelerazione della componente X SLV § 3.2.3.5 (di colore nero).

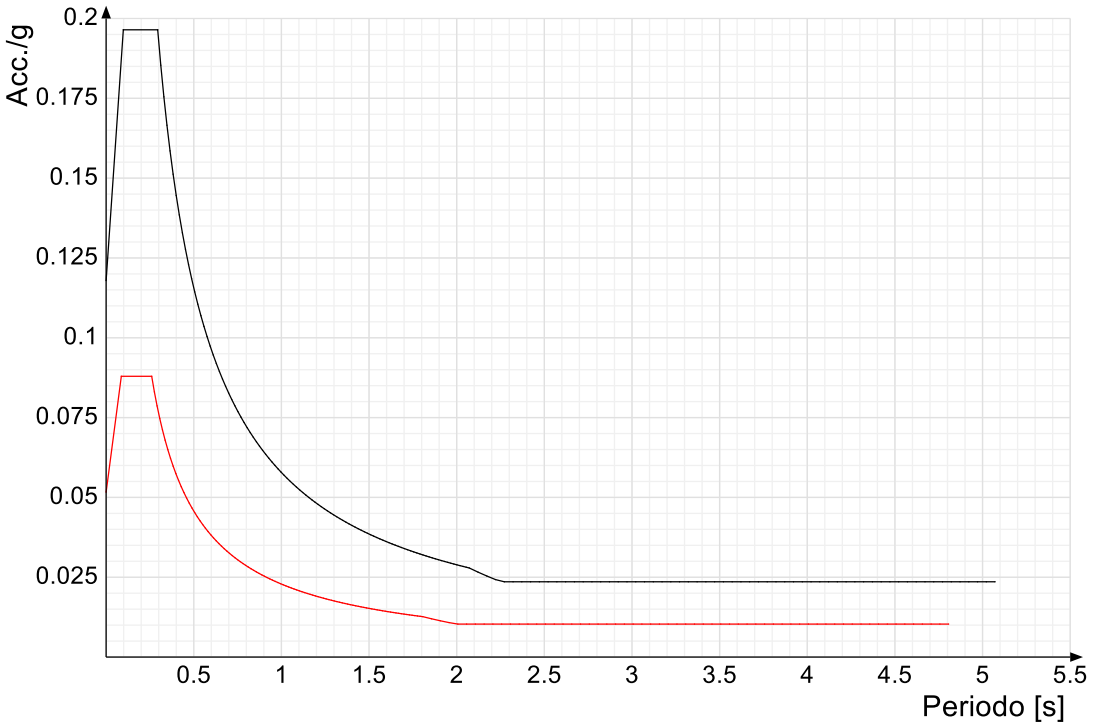

Vengono confrontati lo spettro Spettro di risposta di progetto in accelerazione della componente Y SLD § 3.2.3.5 (di colore rosso) e Spettro di risposta di progetto in accelerazione della componente Y SLV § 3.2.3.5 (di colore nero).

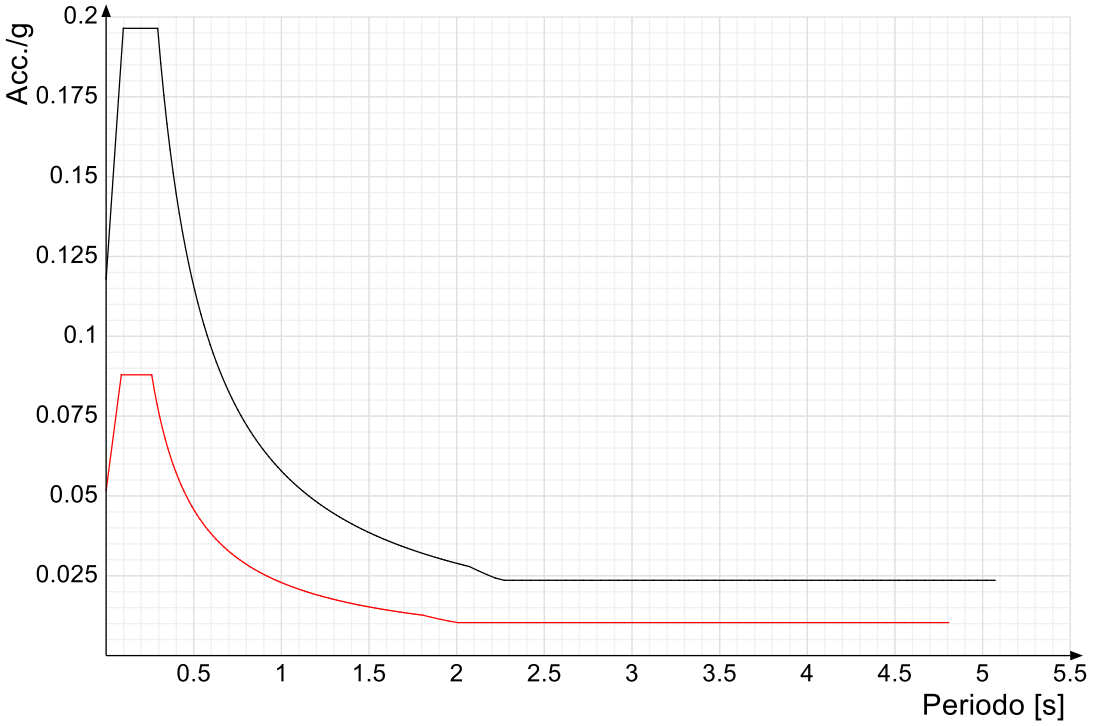

6.1.3 Preferenze di verifica

6.1.3.1 Normativa di verifica in uso

Norma di verifica	D.M. 17-01-18 (N.T.C.)
Cemento armato	Preferenze analisi di verifica in stato limite
Legno	Preferenze di verifica legno D.M. 17-01-18 (N.T.C.)
Acciaio	Preferenze di verifica acciaio D.M. 17-01-18 (N.T.C.)
Alluminio	Preferenze di verifica alluminio EC9
Pannelli in gessofibra	Preferenze di verifica pannelli gessofibra D.M. 17-01-18 (N.T.C.)

6.1.3.2 Normativa di verifica C.A.

γs (fattore di sicurezza parziale per l'acciaio)	1.15	
γc (fattore di sicurezza parziale per il calcestruzzo)	1.5	
Limite σc/fck in combinazione rara	0.6	
Limite σc/fck in combinazione quasi permanente	0.45	
Limite σf/fyk in combinazione rara	0.8	
Coefficiente di riduzione della τ per cattiva aderenza	0.7	
Dimensione limite fessure w1 §4.1.2.2.4	0.02	[cm]
Dimensione limite fessure w2 §4.1.2.2.4	0.03	[cm]
Dimensione limite fessure w3 §4.1.2.2.4	0.04	[cm]
Fattori parziali di sicurezza unitari per meccanismi duttili di strutture esistenti con fattore q	Si	
Copriferro secondo EC2	No	

6.1.3.3 Normativa di verifica legno

γ combinazioni fondamentali massiccio	1.5
γ combinazioni fondamentali lamellare	1.45
γ combinazioni fondamentali unioni	1.5
γ combinazioni eccezionali	1
γ combinazioni esercizio	1
Kmod durata istantaneo, classe 1	1.1
Kmod durata istantaneo, classe 2	1.1
Kmod durata istantaneo, classe 3	0.9
Kmod durata breve, classe 1	0.9
Kmod durata breve, classe 2	0.9
Kmod durata breve, classe 3	0.7
Kmod durata media, classe 1	0.8
Kmod durata media, classe 2	0.8
Kmod durata media, classe 3	0.65
Kmod durata lunga, classe 1	0.7
Kmod durata lunga, classe 2	0.7
Kmod durata lunga, classe 3	0.55
Kmod durata permanente, classe 1	0.6
Kmod durata permanente, classe 2	0.6
Kmod durata permanente, classe 3	0.5
Kdef classe 1	0.6
Kdef classe 2	0.8
Kdef classe 3	2

6.1.3.4 Normativa di verifica acciaio

γm0	1.05
γm1	1.05
γm2	1.25
Coefficiente riduttivo per effetto vettoriale	0.7
Calcolo coefficienti C1, C2, C3 per Mcr	automatico
Coefficienti α, β per flessione deviata	unitari
Verifica semplificata conservativa	si
L/e0 iniziale per profili accoppiati compressi	500
Metodo semplificato formula (4.2.82)	si
Escludi 6.2.6.7 e 6.2.6.8 in 7.5.4.3 e 7.5.4.5	si
Applica Nota 1 del prospetto 6.2	si
Riduzione fy per tubi tondi di classe 4	no
Effettua la verifica secondo 6.2.8 con irrigidimenti superiori (piastra di base)	si
Limite spostamento relativo interpiano e monopiano colonne	0.00333
Limite spostamento relativo complessivo multipiano colonne	0.002
Considera taglio resistente estremità sagomati	no
Fattori parziali di sicurezza unitari per meccanismi duttili di strutture esistenti con fattore q	si

6.1.4 Preferenze FEM

Dimensione massima ottimale mesh pareti (default)	80	[cm]
Dimensione massima ottimale mesh piastre (default)	80	[cm]
Tipo di mesh dei gusci (default)	Quadrilateri o triangoli	
Tipo di mesh imposta ai gusci	Specifico dell'elemento	
Metodo P-Delta	non utilizzato	
Analisi buckling	non utilizzata	
Rapporto spessore flessionale/membranale gusci muratura verticali	0.2	
Spessori membranale e flessionale pareti XLAM da sole tavole verticali	No	
Moltiplicatore rigidezza connettori pannelli pareti legno a diaframma	1	
Tolleranza di parallelismo	4.99	[deg]
Tolleranza di unicità punti	10	[cm]
Tolleranza generazione nodi di aste	1	[cm]
Tolleranza di parallelismo in suddivisione aste	4.99	[deg]
Tolleranza generazione nodi di gusci	4	[cm]
Tolleranza eccentricità carichi concentrati	100	[cm]
Considera deformabilità a taglio negli elementi guscio	No	
Modello elastico pareti in muratura	Gusci	
Concentra masse pareti nei vertici	No	
Segno risultati analisi spettrale	Analisi statica	
Memoria utilizzabile dal solutore	8000000	
Metodo di risoluzione della matrice	Intel MKL PARDISO	
Scrivi commenti nel file di input	No	
Scrivi file di output in formato testo	No	
Solidi colle e corpi ruvidi (default)	Solidi reali	
Moltiplicatore rigidezza molla torsionale applicata ad aste di fondazione	1	
Modello trave su suolo alla Winkler nel caso di modellazione lineare	Equilibrio elastico	

6.1.5 Moltiplicatori inerziali

***Tipologia**: tipo di entità a cui si riferiscono i moltiplicatori inerziali.*

***J2**: moltiplicatore inerziale di J2. Il valore è adimensionale.*
***J3**: moltiplicatore inerziale di J3. Il valore è adimensionale.*
***Jt**: moltiplicatore inerziale di Jt. Il valore è adimensionale.*
***A**: moltiplicatore dell'area della sezione. Il valore è adimensionale.*
***A2**: moltiplicatore dell'area a taglio in direzione 2. Il valore è adimensionale.*
***A3**: moltiplicatore dell'area a taglio in direzione 3. Il valore è adimensionale.*
***Conci rigidi**: fattore di riduzione dei tronchi rigidi. Il valore è adimensionale.*

Tipologia	J2	J3	Jt	A	A2	A3	Conci rigidi
Trave C.A.	1	1	0.01	1	1	1	0.5
Pilastro C.A.	1	1	0.01	1	1	1	0.5
Trave di fondazione	1	1	0.01	1	1	1	0.5
Palo	1	1	0.01	1	1	1	0
Trave in legno	1	1	1	1	1	1	1
Colonna in legno	1	1	1	1	1	1	1
Trave in acciaio	1	1	1	1	1	1	1
Colonna in acciaio	1	1	1	1	1	1	1
Trave di reticolare in acciaio	1	1	1	1	1	1	1
Maschio in muratura	0	1	0	1	1	1	1
Trave di accoppiamento in muratura	0	1	0	1	1	1	1
Trave di scala C.A. nervata	1	1	1	1	1	1	0.5
Trave tralicciata	1	1	0.01	1	1	1	0.5

6.1.6 Preferenze di analisi non lineare FEM

Metodo iterativo	Secante
Tolleranza iterazione	0.00001
Numero massimo iterazioni	50

6.1.7 Preferenze di analisi carichi superficiali

Detrazione peso proprio solai nelle zone di sovrapposizione	non applicata	
Metodo di ripartizione	a zone d'influenza	
Percentuale carico calcolato a trave continua	0	
Esegui smoothing diagrammi di carico	applicata	
Tolleranza smoothing altezza trapezi	0.001	[daN/cm]
Tolleranza smoothing altezza media trapezi	0.001	[daN/cm]

6.1.8 Preferenze del suolo

Fondazioni non modellate e struttura bloccata alla base	si	
Fondazioni bloccate orizzontalmente	si	
Considera peso sismico delle fondazioni	no	
Fondazioni superficiali e profonde su suolo elastoplastico	no	
Coefficiente di sottofondo verticale per fondazioni superficiali (default)	3	[daN/cm³]
Rapporto di coefficiente sottofondo orizzontale/verticale	0.5	
Pressione verticale limite sul terreno per abbassamento (default)	10	[daN/cm²]
Pressione verticale limite sul terreno per innalzamento (default)	0.001	[daN/cm²]
Metodo di calcolo della K verticale	Vesic	
Metodo di calcolo della portanza e della pressione limite	Vesic	
Terreno laterale di riporto da piano posa fondazioni (default)	sabbia media limosa debolmente ghiaiosa	
Dimensione massima della discretizzazione del palo (default)	200	[cm]
Moltiplicatore coesione per pressione orizzontale limite nei pali	1	
Moltiplicatore spinta passiva per pressione orizzontale pali	1	
K punta palo (default)	4	[daN/cm³]
Pressione limite punta palo (default)	10	[daN/cm²]
Pressione per verifica schiacciamento fondazioni superficiali	6	[daN/cm²]
Calcola cedimenti fondazioni superficiali	no	
Spessore massimo strato	100	[cm]
Profondità massima	3000	[cm]
Cedimento assoluto ammissibile	5	[cm]
Cedimento differenziale ammissibile	5	[cm]
Cedimento relativo ammissibile	5	[cm]
Rapporto di inflessione F/L ammissibile	0.003333	
Rotazione rigida ammissibile	0.191	[deg]
Rotazione assoluta ammissibile	0.191	[deg]
Distorsione positiva ammissibile	0.191	[deg]
Distorsione negativa ammissibile	0.095	[deg]
Considera fondazioni compensate	no	
Coefficiente di riduzione della a Max attesa	0.3	
Condizione per la valutazione della spinta su pareti	Lungo termine	
Considera l'azione sismica del terreno anche su pareti sotto lo zero sismico	no	
Calcola cedimenti teorici pali	no	
Considera accorciamento del palo	si	
Distanza influenza cedimento palo	1000	[cm]
Distribuzione attrito laterale	Attrito laterale uniforme	
Ripartizione del carico	Ripartizione come da modello FEM	
Scelta terreno laterale	Media pesata degli strati coinvolti	
Scelta terreno punta	Media pesata degli strati coinvolti	
Cedimento assoluto ammissibile	5	[cm]
Cedimento medio ammissibile	5	[cm]
Cedimento differenziale ammissibile	5	[cm]
Rotazione rigida ammissibile	0.191	[deg]
Trascura la coesione efficace in verifica allo scorrimento	si	
Considera inclinazione spinta del terreno contro pareti	no	
Esegui verifica a liquefazione	no	
Metodo di verifica liquefazione	Seed-Idriss (1982)	
Coeff. di sicurezza minimo a liquefazione	1.3	
Magnitudo scaling factor per liquefazione	1	

6.1.9 Preferenze progetto muratura

Forza minima aggancio al piano (default)	0	[daN/cm]
Denominatore per momento ortogonale (default)	8	
Minima resistenza trazione travi (default)	30000	[daN]
Angolo cuneo verifica ribaltamento (default)	30	[deg]
Considera d = 0.8 * h nei maschi senza fibre compresse	No	
Verifica pressoflessione deviata	No	
Considera effetto piastra in presenza di irrigidimenti	Si	
N = 0 per verifica fessurazione diagonale elementi esistenti in D.M. 17-01-2018	Si	

6.2 AZIONI E CARICHI

6.2.1 Azione del vento

Zona	Zona 2	
Rugosità	Aree urbane (non di classe A), suburbane, industriali e boschive	
Categoria esposizione	IV	
Vb	2500	[cm/s]
Tr	50	[cm/s]
Ct	1	[cm/s]
qr	0.00391	[daN/cm²]

6.2.2 Azione della neve

Zona	Zona I mediterranea	
Classe topografica	Aree in cui non è presente una significativa rimozione di neve sulla costruzione prodotta dal vento, a causa del terreno, altre costruzioni o alberi	
Ce	1	
Ct	1	
Tr	50	
qsk	0.015	[daN/cm²]

Copertura ad una falda D.M. 17-01-18 §3.4.3.2

α	0	[deg]
μ	0.8	
q	0.012	[daN/cm²]

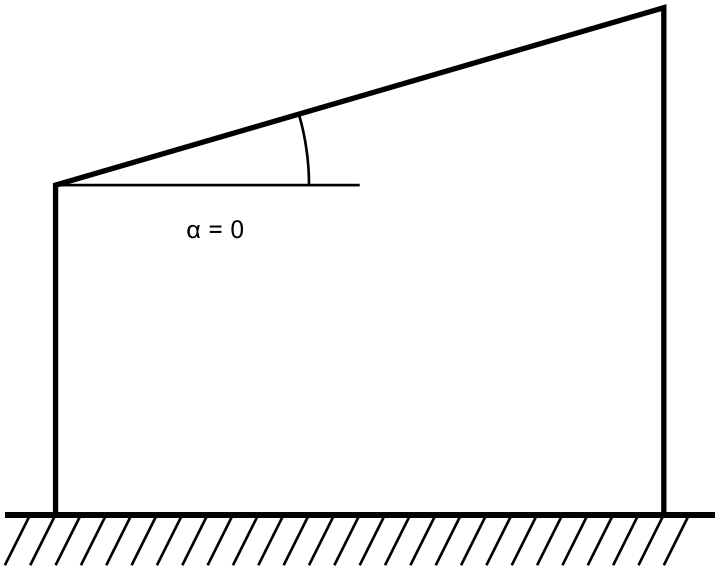

6.2.3 Condizioni elementari di carico

***Descrizione**: nome assegnato alla condizione elementare.*
***Nome breve**: nome breve assegnato alla condizione elementare.*
***Durata**: descrive la durata della condizione (necessario per strutture in legno).*

***ψ0**: coefficiente moltiplicatore ψ0. Il valore è adimensionale.*
***ψ1**: coefficiente moltiplicatore ψ1. Il valore è adimensionale.*
***ψ2**: coefficiente moltiplicatore ψ2. Il valore è adimensionale.*
***Con segno**: descrive se la condizione elementare ha la possibilità di variare di segno.*

Descrizione	Nome breve	Durata	ψ0	ψ1	ψ2	Con segno
Pesi strutturali	Pesi	Permanente				
Permanenti portati	Port.	Permanente				
Eccezione SdC3	Eccezione SdC3	Media	0.4	0.4	0	
Neve	Neve	Media	0.5	0.2	0	
Eccezionale SdC4	Eccezionale SdC4	Media	0.4	0.4	0	
Eccezionale SdC1	Eccezionale SdC1	Media	0.75	0.75	0	
ΔT	ΔT	Media	0.6	0.5	0	No
Sisma X SLV	X SLV					
Sisma Y SLV	Y SLV					
Sisma Z SLV	Z SLV					
Eccentricità Y per sisma X SLV	EY SLV					
Eccentricità X per sisma Y SLV	EX SLV					
Sisma X SLD	X SLD					
Sisma Y SLD	Y SLD					
Sisma Z SLD	Z SLD					
Eccentricità Y per sisma X SLD	EY SLD					
Eccentricità X per sisma Y SLD	EX SLD					
Sisma X SLO	X SLO					
Sisma Y SLO	Y SLO					
Sisma Z SLO	Z SLO					
Eccentricità Y per sisma X SLO	EY SLO					
Eccentricità X per sisma Y SLO	EX SLO					
Terreno sisma X SLV	Tr x SLV					
Terreno sisma Y SLV	Tr y SLV					
Terreno sisma Z SLV	Tr z SLV					
Terreno sisma X SLD	Tr x SLD					
Terreno sisma Y SLD	Tr y SLD					
Terreno sisma Z SLD	Tr z SLD					
Terreno sisma X SLO	Tr x SLO					
Terreno sisma Y SLO	Tr y SLO					
Terreno sisma Z SLO	Tr z SLO					
Rig. Ux	R Ux					
Rig. Uy	R Uy					
Rig. Rz	R Rz					

6.2.4 Combinazioni di carico

***Nome**: E' il nome esteso che contraddistingue la condizione elementare di carico.*
***Nome breve**: E' il nome compatto della condizione elementare di carico, che viene utilizzato altrove nella relazione.*
***Pesi**: Pesi strutturali*
***Port.**: Permanenti portati*
***Eccezione SdC3**: Eccezione SdC3*
***Neve**: Neve*
***Eccezionale SdC4**: Eccezionale SdC4*
***Eccezionale SdC1**: Eccezionale SdC1*
***ΔT**: ΔT*
***X SLO**: Sisma X SLO*
***Y SLO**: Sisma Y SLO*
***Z SLO**: Sisma Z SLO*
***EY SLO**: Eccentricità Y per sisma X SLO*
***EX SLO**: Eccentricità X per sisma Y SLO*
***Tr x SLO**: Terreno sisma X SLO*
***Tr y SLO**: Terreno sisma Y SLO*
***Tr z SLO**: Terreno sisma Z SLO*
***X SLD**: Sisma X SLD*
***Y SLD**: Sisma Y SLD*
***Z SLD**: Sisma Z SLD*
***EY SLD**: Eccentricità Y per sisma X SLD*
***EX SLD**: Eccentricità X per sisma Y SLD*
***Tr x SLD**: Terreno sisma X SLD*
***Tr y SLD**: Terreno sisma Y SLD*

***Tr z SLD**: Terreno sisma Z SLD*
***X SLV**: Sisma X SLV*
***Y SLV**: Sisma Y SLV*
***Z SLV**: Sisma Z SLV*
***EY SLV**: Eccentricità Y per sisma X SLV*
***EX SLV**: Eccentricità X per sisma Y SLV*
***Tr x SLV**: Terreno sisma X SLV*
***Tr y SLV**: Terreno sisma Y SLV*
***Tr z SLV**: Terreno sisma Z SLV*
***R Ux**: Rig. Ux*
***R Uy**: Rig. Uy*
***R Rz**: Rig. Rz*

Tutte le combinazioni di carico vengono raggruppate per famiglia di appartenenza. Le celle di una riga contengono i coefficienti moltiplicatori della i-esima combinazione, dove il valore della prima cella è da intendersi come moltiplicatore associato alla prima condizione elementare, la seconda cella si riferisce alla seconda condizione elementare e così via.

Famiglia SLU

Il nome compatto della famiglia è SLU.

Nome	Nome breve	Pesi	Port.	Eccezione SdC3	Neve	Eccezionale SdC4	Eccezionale SdC1	ΔT
1	SLU 1	1	0.8	0	0	0	0	0
2	SLU 2	1	0.8	0	0	0	1.5	0
3	SLU 3	1	0.8	0	0	0.6	1.5	0
4	SLU 4	1	0.8	0	0	1.5	0	0
5	SLU 5	1	0.8	0	0	1.5	1.125	0
6	SLU 6	1	0.8	0	0.75	0	1.5	0
7	SLU 7	1	0.8	0	0.75	0.6	1.5	0
8	SLU 8	1	0.8	0	0.75	1.5	0	0
9	SLU 9	1	0.8	0	0.75	1.5	1.125	0
10	SLU 10	1	0.8	0	1.5	0	0	0
11	SLU 11	1	0.8	0	1.5	0	1.125	0
12	SLU 12	1	0.8	0	1.5	0.6	0	0
13	SLU 13	1	0.8	0	1.5	0.6	1.125	0
14	SLU 14	1	0.8	0.6	0	0	1.5	0
15	SLU 15	1	0.8	0.6	0	0.6	1.5	0
16	SLU 16	1	0.8	0.6	0	1.5	0	0
17	SLU 17	1	0.8	0.6	0	1.5	1.125	0
18	SLU 18	1	0.8	0.6	0.75	0	1.5	0
19	SLU 19	1	0.8	0.6	0.75	0.6	1.5	0
20	SLU 20	1	0.8	0.6	0.75	1.5	0	0
21	SLU 21	1	0.8	0.6	0.75	1.5	1.125	0
22	SLU 22	1	0.8	0.6	1.5	0	0	0
23	SLU 23	1	0.8	0.6	1.5	0	1.125	0
24	SLU 24	1	0.8	0.6	1.5	0.6	0	0
25	SLU 25	1	0.8	0.6	1.5	0.6	1.125	0
26	SLU 26	1	0.8	1.5	0	0	0	0
27	SLU 27	1	0.8	1.5	0	0	1.125	0
28	SLU 28	1	0.8	1.5	0	0.6	0	0
29	SLU 29	1	0.8	1.5	0	0.6	1.125	0
30	SLU 30	1	0.8	1.5	0.75	0	0	0
31	SLU 31	1	0.8	1.5	0.75	0	1.125	0
32	SLU 32	1	0.8	1.5	0.75	0.6	0	0
33	SLU 33	1	0.8	1.5	0.75	0.6	1.125	0
34	SLU 34	1	1.5	0	0	0	0	0
35	SLU 35	1	1.5	0	0	0	1.5	0
36	SLU 36	1	1.5	0	0	0.6	1.5	0
37	SLU 37	1	1.5	0	0	1.5	0	0
38	SLU 38	1	1.5	0	0	1.5	1.125	0
39	SLU 39	1	1.5	0	0.75	0	1.5	0
40	SLU 40	1	1.5	0	0.75	0.6	1.5	0
41	SLU 41	1	1.5	0	0.75	1.5	0	0
42	SLU 42	1	1.5	0	0.75	1.5	1.125	0
43	SLU 43	1	1.5	0	1.5	0	0	0
44	SLU 44	1	1.5	0	1.5	0	1.125	0
45	SLU 45	1	1.5	0	1.5	0.6	0	0
46	SLU 46	1	1.5	0	1.5	0.6	1.125	0
47	SLU 47	1	1.5	0.6	0	0	1.5	0
48	SLU 48	1	1.5	0.6	0	0.6	1.5	0
49	SLU 49	1	1.5	0.6	0	1.5	0	0
50	SLU 50	1	1.5	0.6	0	1.5	1.125	0
51	SLU 51	1	1.5	0.6	0.75	0	1.5	0
52	SLU 52	1	1.5	0.6	0.75	0.6	1.5	0
53	SLU 53	1	1.5	0.6	0.75	1.5	0	0
54	SLU 54	1	1.5	0.6	0.75	1.5	1.125	0
55	SLU 55	1	1.5	0.6	1.5	0	0	0
56	SLU 56	1	1.5	0.6	1.5	0	1.125	0
57	SLU 57	1	1.5	0.6	1.5	0.6	0	0
58	SLU 58	1	1.5	0.6	1.5	0.6	1.125	0
59	SLU 59	1	1.5	1.5	0	0	0	0
60	SLU 60	1	1.5	1.5	0	0	1.125	0
61	SLU 61	1	1.5	1.5	0	0.6	0	0

Nome	Nome breve	Pesi	Port.	Eccezione SdC3	Neve	Eccezionale SdC4	Eccezionale SdC1	ΔT
62	SLU 62	1	1.5	1.5	0	0.6	1.125	0
63	SLU 63	1	1.5	1.5	0.75	0	0	0
64	SLU 64	1	1.5	1.5	0.75	0	1.125	0
65	SLU 65	1	1.5	1.5	0.75	0.6	0	0
66	SLU 66	1	1.5	1.5	0.75	0.6	1.125	0
67	SLU 67	1.3	0.8	0	0	0	0	0
68	SLU 68	1.3	0.8	0	0	0	1.5	0
69	SLU 69	1.3	0.8	0	0	0.6	1.5	0
70	SLU 70	1.3	0.8	0	0	1.5	0	0
71	SLU 71	1.3	0.8	0	0	1.5	1.125	0
72	SLU 72	1.3	0.8	0	0.75	0	1.5	0
73	SLU 73	1.3	0.8	0	0.75	0.6	1.5	0
74	SLU 74	1.3	0.8	0	0.75	1.5	0	0
75	SLU 75	1.3	0.8	0	0.75	1.5	1.125	0
76	SLU 76	1.3	0.8	0	1.5	0	0	0
77	SLU 77	1.3	0.8	0	1.5	0	1.125	0
78	SLU 78	1.3	0.8	0	1.5	0.6	0	0
79	SLU 79	1.3	0.8	0	1.5	0.6	1.125	0
80	SLU 80	1.3	0.8	0.6	0	0	1.5	0
81	SLU 81	1.3	0.8	0.6	0	0.6	1.5	0
82	SLU 82	1.3	0.8	0.6	0	1.5	0	0
83	SLU 83	1.3	0.8	0.6	0	1.5	1.125	0
84	SLU 84	1.3	0.8	0.6	0.75	0	1.5	0
85	SLU 85	1.3	0.8	0.6	0.75	0.6	1.5	0
86	SLU 86	1.3	0.8	0.6	0.75	1.5	0	0
87	SLU 87	1.3	0.8	0.6	0.75	1.5	1.125	0
88	SLU 88	1.3	0.8	0.6	1.5	0	0	0
89	SLU 89	1.3	0.8	0.6	1.5	0	1.125	0
90	SLU 90	1.3	0.8	0.6	1.5	0.6	0	0
91	SLU 91	1.3	0.8	0.6	1.5	0.6	1.125	0
92	SLU 92	1.3	0.8	1.5	0	0	0	0
93	SLU 93	1.3	0.8	1.5	0	0	1.125	0
94	SLU 94	1.3	0.8	1.5	0	0.6	0	0
95	SLU 95	1.3	0.8	1.5	0	0.6	1.125	0
96	SLU 96	1.3	0.8	1.5	0.75	0	0	0
97	SLU 97	1.3	0.8	1.5	0.75	0	1.125	0
98	SLU 98	1.3	0.8	1.5	0.75	0.6	0	0
99	SLU 99	1.3	0.8	1.5	0.75	0.6	1.125	0
100	SLU 100	1.3	1.5	0	0	0	0	0
101	SLU 101	1.3	1.5	0	0	0	1.5	0
102	SLU 102	1.3	1.5	0	0	0.6	1.5	0
103	SLU 103	1.3	1.5	0	0	1.5	0	0
104	SLU 104	1.3	1.5	0	0	1.5	1.125	0
105	SLU 105	1.3	1.5	0	0.75	0	1.5	0
106	SLU 106	1.3	1.5	0	0.75	0.6	1.5	0
107	SLU 107	1.3	1.5	0	0.75	1.5	0	0
108	SLU 108	1.3	1.5	0	0.75	1.5	1.125	0
109	SLU 109	1.3	1.5	0	1.5	0	0	0
110	SLU 110	1.3	1.5	0	1.5	0	1.125	0
111	SLU 111	1.3	1.5	0	1.5	0.6	0	0
112	SLU 112	1.3	1.5	0	1.5	0.6	1.125	0
113	SLU 113	1.3	1.5	0.6	0	0	1.5	0
114	SLU 114	1.3	1.5	0.6	0	0.6	1.5	0
115	SLU 115	1.3	1.5	0.6	0	1.5	0	0
116	SLU 116	1.3	1.5	0.6	0	1.5	1.125	0
117	SLU 117	1.3	1.5	0.6	0.75	0	1.5	0
118	SLU 118	1.3	1.5	0.6	0.75	0.6	1.5	0
119	SLU 119	1.3	1.5	0.6	0.75	1.5	0	0
120	SLU 120	1.3	1.5	0.6	0.75	1.5	1.125	0
121	SLU 121	1.3	1.5	0.6	1.5	0	0	0
122	SLU 122	1.3	1.5	0.6	1.5	0	1.125	0
123	SLU 123	1.3	1.5	0.6	1.5	0.6	0	0
124	SLU 124	1.3	1.5	0.6	1.5	0.6	1.125	0
125	SLU 125	1.3	1.5	1.5	0	0	0	0
126	SLU 126	1.3	1.5	1.5	0	0	1.125	0
127	SLU 127	1.3	1.5	1.5	0	0.6	0	0
128	SLU 128	1.3	1.5	1.5	0	0.6	1.125	0
129	SLU 129	1.3	1.5	1.5	0.75	0	0	0
130	SLU 130	1.3	1.5	1.5	0.75	0	1.125	0
131	SLU 131	1.3	1.5	1.5	0.75	0.6	0	0
132	SLU 132	1.3	1.5	1.5	0.75	0.6	1.125	0

Famiglia SLE rara

Il nome compatto della famiglia è SLE RA.

Nome	Nome breve	Pesi	Port.	Eccezione SdC3	Neve	Eccezionale SdC4	Eccezionale SdC1	ΔT
1	SLE RA 1	1	1	0	0	0	0	0
2	SLE RA 2	1	1	0	0	0	1	0
3	SLE RA 3	1	1	0	0	0.4	1	0
4	SLE RA 4	1	1	0	0	1	0	0
5	SLE RA 5	1	1	0	0	1	0.75	0
6	SLE RA 6	1	1	0	0.5	0	1	0
7	SLE RA 7	1	1	0	0.5	0.4	1	0
8	SLE RA 8	1	1	0	0.5	1	0	0
9	SLE RA 9	1	1	0	0.5	1	0.75	0
10	SLE RA 10	1	1	0	1	0	0	0
11	SLE RA 11	1	1	0	1	0	0.75	0
12	SLE RA 12	1	1	0	1	0.4	0	0
13	SLE RA 13	1	1	0	1	0.4	0.75	0
14	SLE RA 14	1	1	0.4	0	0	1	0
15	SLE RA 15	1	1	0.4	0	0.4	1	0
16	SLE RA 16	1	1	0.4	0	1	0	0
17	SLE RA 17	1	1	0.4	0	1	0.75	0
18	SLE RA 18	1	1	0.4	0.5	0	1	0

Nome	Nome breve	Pesi	Port.	Eccezione SdC3	Neve	Eccezionale SdC4	Eccezionale SdC1	ΔT
19	SLE RA 19	1	1	0.4	0.5	0.4	1	0
20	SLE RA 20	1	1	0.4	0.5	1	0	0
21	SLE RA 21	1	1	0.4	0.5	1	0.75	0
22	SLE RA 22	1	1	0.4	1	0	0	0
23	SLE RA 23	1	1	0.4	1	0	0.75	0
24	SLE RA 24	1	1	0.4	1	0.4	0	0
25	SLE RA 25	1	1	0.4	1	0.4	0.75	0
26	SLE RA 26	1	1	1	0	0	0	0
27	SLE RA 27	1	1	1	0	0	0.75	0
28	SLE RA 28	1	1	1	0	0.4	0	0
29	SLE RA 29	1	1	1	0	0.4	0.75	0
30	SLE RA 30	1	1	1	0.5	0	0	0
31	SLE RA 31	1	1	1	0.5	0	0.75	0
32	SLE RA 32	1	1	1	0.5	0.4	0	0
33	SLE RA 33	1	1	1	0.5	0.4	0.75	0

Famiglia SLE frequente

Il nome compatto della famiglia è SLE FR.

Nome	Nome breve	Pesi	Port.	Eccezione SdC3	Neve	Eccezionale SdC4	Eccezionale SdC1	ΔT
1	SLE FR 1	1	1	0	0	0	0	0
2	SLE FR 2	1	1	0	0	0	0.75	0
3	SLE FR 3	1	1	0	0	0.4	0	0
4	SLE FR 4	1	1	0	0.2	0	0	0
5	SLE FR 5	1	1	0.4	0	0	0	0

Famiglia SLE quasi permanente

Il nome compatto della famiglia è SLE QP.

Nome	Nome breve	Pesi	Port.	Eccezione SdC3	Neve	Eccezionale SdC4	Eccezionale SdC1	ΔT
1	SLE QP 1	1	1	0	0	0	0	0

Famiglia SLU eccezionale

Il nome compatto della famiglia è SLU EX.

Nome	Nome breve	Pesi	Port.	Eccezione SdC3	Neve	Eccezionale SdC4	Eccezionale SdC1	ΔT

Famiglia SLO

Il nome compatto della famiglia è SLO.

Poiché il numero di condizioni elementari previste per le combinazioni di questa famiglia è cospicuo, la tabella verrà spezzata in più parti.

Nome	Nome breve	Pesi	Port.	Eccezione SdC3	Neve	Eccezionale SdC4	Eccezionale SdC1	ΔT	X SLO
1	SLO 1	1	1	0	0	0	0	0	-1
2	SLO 2	1	1	0	0	0	0	0	-1
3	SLO 3	1	1	0	0	0	0	0	-1
4	SLO 4	1	1	0	0	0	0	0	-1
5	SLO 5	1	1	0	0	0	0	0	-0.3
6	SLO 6	1	1	0	0	0	0	0	-0.3
7	SLO 7	1	1	0	0	0	0	0	-0.3
8	SLO 8	1	1	0	0	0	0	0	-0.3
9	SLO 9	1	1	0	0	0	0	0	0.3
10	SLO 10	1	1	0	0	0	0	0	0.3
11	SLO 11	1	1	0	0	0	0	0	0.3
12	SLO 12	1	1	0	0	0	0	0	0.3
13	SLO 13	1	1	0	0	0	0	0	1
14	SLO 14	1	1	0	0	0	0	0	1
15	SLO 15	1	1	0	0	0	0	0	1
16	SLO 16	1	1	0	0	0	0	0	1

Nome	Nome breve	Y SLO	Z SLO	EY SLO	EX SLO	Tr x SLO	Tr y SLO	Tr z SLO
1	SLO 1	-0.3	0	-1	0.3	-1	-0.3	0
2	SLO 2	-0.3	0	1	-0.3	-1	-0.3	0
3	SLO 3	0.3	0	-1	0.3	-1	0.3	0
4	SLO 4	0.3	0	1	-0.3	-1	0.3	0
5	SLO 5	-1	0	-0.3	1	-0.3	-1	0
6	SLO 6	-1	0	0.3	-1	-0.3	-1	0
7	SLO 7	1	0	-0.3	1	-0.3	1	0
8	SLO 8	1	0	0.3	-1	-0.3	1	0
9	SLO 9	-1	0	-0.3	1	0.3	-1	0
10	SLO 10	-1	0	0.3	-1	0.3	-1	0
11	SLO 11	1	0	-0.3	1	0.3	1	0
12	SLO 12	1	0	0.3	-1	0.3	1	0
13	SLO 13	-0.3	0	-1	0.3	1	-0.3	0
14	SLO 14	-0.3	0	1	-0.3	1	-0.3	0
15	SLO 15	0.3	0	-1	0.3	1	0.3	0
16	SLO 16	0.3	0	1	-0.3	1	0.3	0

Famiglia SLD

Il nome compatto della famiglia è SLD.

Poiché il numero di condizioni elementari previste per le combinazioni di questa famiglia è cospicuo, la tabella verrà spezzata in più parti.

Nome	Nome breve	Pesi	Port.	Eccezione SdC3	Neve	Eccezionale SdC4	Eccezionale SdC1	ΔT	X SLD
1	SLD 1	1	1	0	0	0	0	0	-1
2	SLD 2	1	1	0	0	0	0	0	-1
3	SLD 3	1	1	0	0	0	0	0	-1
4	SLD 4	1	1	0	0	0	0	0	-1
5	SLD 5	1	1	0	0	0	0	0	-0.3
6	SLD 6	1	1	0	0	0	0	0	-0.3
7	SLD 7	1	1	0	0	0	0	0	-0.3

Nome	Nome breve	Pesi	Port.	Eccezione SdC3	Neve	Eccezionale SdC4	Eccezionale SdC1	ΔT	X SLD
8	SLD 8	1	1	0	0	0	0	0	-0.3
9	SLD 9	1	1	0	0	0	0	0	0.3
10	SLD 10	1	1	0	0	0	0	0	0.3
11	SLD 11	1	1	0	0	0	0	0	0.3
12	SLD 12	1	1	0	0	0	0	0	0.3
13	SLD 13	1	1	0	0	0	0	0	1
14	SLD 14	1	1	0	0	0	0	0	1
15	SLD 15	1	1	0	0	0	0	0	1
16	SLD 16	1	1	0	0	0	0	0	1

Nome	Nome breve	Y SLD	Z SLD	EY SLD	EX SLD	Tr x SLD	Tr y SLD	Tr z SLD
1	SLD 1	-0.3	0	-1	0.3	-1	-0.3	0
2	SLD 2	-0.3	0	1	-0.3	-1	-0.3	0
3	SLD 3	0.3	0	-1	0.3	-1	0.3	0
4	SLD 4	0.3	0	1	-0.3	-1	0.3	0
5	SLD 5	-1	0	-0.3	1	-0.3	-1	0
6	SLD 6	-1	0	0.3	-1	-0.3	-1	0
7	SLD 7	1	0	-0.3	1	-0.3	1	0
8	SLD 8	1	0	0.3	-1	-0.3	1	0
9	SLD 9	-1	0	-0.3	1	0.3	-1	0
10	SLD 10	-1	0	0.3	-1	0.3	-1	0
11	SLD 11	1	0	-0.3	1	0.3	1	0
12	SLD 12	1	0	0.3	-1	0.3	1	0
13	SLD 13	-0.3	0	-1	0.3	1	-0.3	0
14	SLD 14	-0.3	0	1	-0.3	1	-0.3	0
15	SLD 15	0.3	0	-1	0.3	1	0.3	0
16	SLD 16	0.3	0	1	-0.3	1	0.3	0

Famiglia SLV

Il nome compatto della famiglia è SLV.
Poiché il numero di condizioni elementari previste per le combinazioni di questa famiglia è cospicuo, la tabella verrà spezzata in più parti.

Nome	Nome breve	Pesi	Port.	Eccezione SdC3	Neve	Eccezionale SdC4	Eccezionale SdC1	ΔT	X SLV
1	SLV 1	1	1	0	0	0	0	0	-1
2	SLV 2	1	1	0	0	0	0	0	-1
3	SLV 3	1	1	0	0	0	0	0	-1
4	SLV 4	1	1	0	0	0	0	0	-1
5	SLV 5	1	1	0	0	0	0	0	-0.3
6	SLV 6	1	1	0	0	0	0	0	-0.3
7	SLV 7	1	1	0	0	0	0	0	-0.3
8	SLV 8	1	1	0	0	0	0	0	-0.3
9	SLV 9	1	1	0	0	0	0	0	0.3
10	SLV 10	1	1	0	0	0	0	0	0.3
11	SLV 11	1	1	0	0	0	0	0	0.3
12	SLV 12	1	1	0	0	0	0	0	0.3
13	SLV 13	1	1	0	0	0	0	0	1
14	SLV 14	1	1	0	0	0	0	0	1
15	SLV 15	1	1	0	0	0	0	0	1
16	SLV 16	1	1	0	0	0	0	0	1

Nome	Nome breve	Y SLV	Z SLV	EY SLV	EX SLV	Tr x SLV	Tr y SLV	Tr z SLV
1	SLV 1	-0.3	0	-1	0.3	-1	-0.3	0
2	SLV 2	-0.3	0	1	-0.3	-1	-0.3	0
3	SLV 3	0.3	0	-1	0.3	-1	0.3	0
4	SLV 4	0.3	0	1	-0.3	-1	0.3	0
5	SLV 5	-1	0	-0.3	1	-0.3	-1	0
6	SLV 6	-1	0	0.3	-1	-0.3	-1	0
7	SLV 7	1	0	-0.3	1	-0.3	1	0
8	SLV 8	1	0	0.3	-1	-0.3	1	0
9	SLV 9	-1	0	-0.3	1	0.3	-1	0
10	SLV 10	-1	0	0.3	-1	0.3	-1	0
11	SLV 11	1	0	-0.3	1	0.3	1	0
12	SLV 12	1	0	0.3	-1	0.3	1	0
13	SLV 13	-0.3	0	-1	0.3	1	-0.3	0
14	SLV 14	-0.3	0	1	-0.3	1	-0.3	0
15	SLV 15	0.3	0	-1	0.3	1	0.3	0
16	SLV 16	0.3	0	1	-0.3	1	0.3	0

Famiglia Calcolo rigidezza torsionale/flessionale di piano

Il nome compatto della famiglia è CRTFP.

Nome	Nome breve	R Ux	R Uy	R Rz
Rig. Ux+	CRTFP Ux+	1	0	0
Rig. Ux-	CRTFP Ux-	-1	0	0
Rig. Uy+	CRTFP Uy+	0	1	0
Rig. Uy-	CRTFP Uy-	0	-1	0
Rig. Rz+	CRTFP Rz+	0	0	1
Rig. Rz-	CRTFP Rz-	0	0	-1

6.2.5 Definizioni di carichi lineari

***Nome**: nome identificativo della definizione di carico.*
***Valori**: valori associati alle condizioni di carico.*
***Condizione**: condizione di carico a cui sono associati i valori.*
***Descrizione**: nome assegnato alla condizione elementare.*
***Fx i.**: valore iniziale della forza, per unità di lunghezza, agente in direzione X. [daN/cm]*
***Fx f.**: valore finale della forza, per unità di lunghezza, agente in direzione X. [daN/cm]*

***Fy i.**: valore iniziale della forza, per unità di lunghezza, agente in direzione Y. [daN/cm]*
***Fy f.**: valore finale della forza, per unità di lunghezza, agente in direzione Y. [daN/cm]*
***Fz i.**: valore iniziale della forza, per unità di lunghezza, agente in direzione Z. [daN/cm]*
***Fz f.**: valore finale della forza, per unità di lunghezza, agente in direzione Z. [daN/cm]*
***Mx i.**: valore iniziale della coppia, per unità di lunghezza, agente attorno l'asse X. [daN]*
***Mx f.**: valore finale della coppia, per unità di lunghezza, agente attorno l'asse X. [daN]*
***My i.**: valore iniziale della coppia, per unità di lunghezza, agente attorno l'asse Y. [daN]*
***My f.**: valore finale della coppia, per unità di lunghezza, agente attorno l'asse Y. [daN]*
***Mz i.**: valore iniziale della coppia, per unità di lunghezza, agente attorno l'asse Z. [daN]*
***Mz f.**: valore finale della coppia, per unità di lunghezza, agente attorno l'asse Z. [daN]*

Nome	Valori												
	Condizione	Fx i.	Fx f.	Fy i.	Fy f.	Fz i.	Fz f.	Mx i.	Mx f.	My i.	My f.	Mz i.	Mz f.
	Descrizione												
1	Pesi strutturali	0	0	0	0	-57.7	-57.7	0	0	0	0	0	0
	Permanenti portati	0	0	0	0	0	0	0	0	0	0	0	0
	Eccezione SdC3	0	0	0	0	0	0	0	0	0	0	0	0
	Neve	0	0	0	0	0	0	0	0	0	0	0	0
	Eccezionale SdC4	0	0	0	0	0	0	0	0	0	0	0	0
	Eccezionale SdC1	0	0	0	0	0	0	0	0	0	0	0	0
2	Pesi strutturali	0	0	0	0	-29	-29	0	0	0	0	0	0
	Permanenti portati	0	0	0	0	0	0	0	0	0	0	0	0
	Eccezione SdC3	0	0	0	0	0	0	0	0	0	0	0	0
	Neve	0	0	0	0	0	0	0	0	0	0	0	0
	Eccezionale SdC4	0	0	0	0	0	0	0	0	0	0	0	0
	Eccezionale SdC1	0	0	0	0	0	0	0	0	0	0	0	0
3	Pesi strutturali	0	0	0	0	-28.4	-28.4	0	0	0	0	0	0
	Permanenti portati	0	0	0	0	0	0	0	0	0	0	0	0
	Eccezione SdC3	0	0	0	0	0	0	0	0	0	0	0	0
	Neve	0	0	0	0	0	0	0	0	0	0	0	0
	Eccezionale SdC4	0	0	0	0	0	0	0	0	0	0	0	0
	Eccezionale SdC1	0	0	0	0	0	0	0	0	0	0	0	0

6.2.6 Definizioni di carichi superficiali

***Nome**: nome identificativo della definizione di carico.*
***Valori**: valori associati alle condizioni di carico.*
***Condizione**: condizione di carico a cui sono associati i valori.*
***Descrizione**: nome assegnato alla condizione elementare.*
***Valore**: modulo del carico superficiale applicato alla superficie. [daN/cm²]*
***Applicazione**: modalità con cui il carico è applicato alla superficie.*

Nome	Valori		
	Condizione	Valore	Applicazione
	Descrizione		
1	Pesi strutturali	0	Verticale
	Permanenti portati	0	Verticale
	Eccezione SdC3	0.2088	Verticale
	Neve	0.012	Verticale
	Eccezionale SdC4	0	Verticale
	Eccezionale SdC1	0	Verticale
2	Pesi strutturali	0	Verticale
	Permanenti portati	0	Verticale
	Eccezione SdC3	0.025	Verticale
	Neve	0.012	Verticale
	Eccezionale SdC4	0	Verticale
	Eccezionale SdC1	0	Verticale
3	Pesi strutturali	0	Verticale
	Permanenti portati	0	Verticale
	Eccezione SdC3	0	Verticale
	Neve	0.012	Verticale
	Eccezionale SdC4	0.0177	Verticale
	Eccezionale SdC1	0	Verticale
4	Pesi strutturali	0	Verticale
	Permanenti portati	0	Verticale
	Eccezione SdC3	0	Verticale
	Neve	0.012	Verticale
	Eccezionale SdC4	0	Verticale
	Eccezionale SdC1	1.2531	Verticale
5	Pesi strutturali	0	Verticale
	Permanenti portati	0	Verticale
	Eccezione SdC3	0	Verticale
	Neve	0.012	Verticale
	Eccezionale SdC4	0	Verticale
	Eccezionale SdC1	0.09	Verticale
6	Pesi strutturali	0	Verticale
	Permanenti portati	0	Verticale
	Eccezione SdC3	0	Verticale
	Neve	0.012	Verticale
	Eccezionale SdC4	0	Verticale
	Eccezionale SdC1	0.8355	Verticale

6.3 QUOTE

6.3.1 Livelli

***Descrizione breve**: nome sintetico assegnato al livello.*
***Descrizione**: nome assegnato al livello.*
***Quota**: quota superiore espressa nel sistema di riferimento assoluto. [cm]*
***Spessore**: spessore del livello. [cm]*

Descrizione breve	Descrizione	Quota	Spessore
L1	Fondazione	0	24
L2	Impalcato 1	100	24
L3	impalcato 2	150	24
L4	impalcato 3	180	24
L5	impalcato 4	200	24

6.3.2 Falde

***Descrizione breve**: nome sintetico assegnato alla falda.*
***Descrizione**: nome assegnato alla falda.*
***Sp.**: spessore del piano della falda. [cm]*
***Primo punto**: primo punto di definizione del piano dell'estradosso della falda.*
***X**: coordinata X. [cm]*
***Y**: coordinata Y. [cm]*
***Quota**: quota. esprimibile come livello, falda, piano orizzontale alla Z specificata. [cm]*
***Secondo punto**: secondo punto di definizione del piano dell'estradosso della falda.*
***X**: coordinata X. [cm]*
***Y**: coordinata Y. [cm]*
***Quota**: quota. esprimibile come livello, falda, piano orizzontale alla Z specificata. [cm]*
***Terzo punto**: terzo punto di definizione del piano dell'estradosso della falda.*
***X**: coordinata X. [cm]*
***Y**: coordinata Y. [cm]*
***Quota**: quota. esprimibile come livello, falda, piano orizzontale alla Z specificata. [cm]*

Descrizione breve	Descrizione	Sp.	Primo punto			Secondo punto			Terzo punto		
			X	Y	Quota	X	Y	Quota	X	Y	Quota
F1	Falda 3	24	170.5	0	impalcato 3	170.5	200	impalcato 3	98	200	impalcato 2
F2	Falda 4	24	340	0	impalcato 4	340	200	impalcato 4	170.5	200	impalcato 3
F3	Falda 1	24	42.5	0	Impalcato 1	42.5	200	Impalcato 1	0	200	Fondazione
F4	Falda 2	24	98	0	impalcato 2	98	200	impalcato 2	42.5	200	Impalcato 1
F5	Falda 5	24	680	200	Fondazione	637.5	200	Impalcato 1	637.5	0	Impalcato 1
F6	Falda 6	24	637.5	200	Impalcato 1	582	200	impalcato 2	582	0	impalcato 2
F7	Falda 7	24	582	200	impalcato 2	509.5	200	impalcato 3	509.5	0	impalcato 3
F8	Falda 8	24	509.5	200	impalcato 3	340	200	impalcato 4	340	0	impalcato 4

6.5 ELEMENTI DI INPUT

6.5.1 Fili fissi

6.5.1.1 Fili fissi di piano

***Livello**: quota di inserimento espressa con notazione breve esprimibile come livello, falda, piano orizzontale alla Z specificata. [cm]*
***Punto**: punto di inserimento.*
***X**: coordinata X. [cm]*
***Y**: coordinata Y. [cm]*
***Estradosso**: distanza dalla quota di inserimento misurata in direzione ortogonale al piano della quota e con verso positivo verso l'alto. [cm]*
***Angolo**: angolo misurato dal semiasse positivo delle ascisse in verso antiorario. [deg]*
***Tipo**: tipo di simbolo.*
***T.c.**: testo completo visualizzato accanto al filo fisso, costituito dalla concatenazione del prefisso e del testo.*

Livello	Punto		Estradosso	Angolo	Tipo	T.c.
	X	Y				
L1	42.5	100	0	270	Croce	13
L1	637.5	600	0	0	Croce	104
L1	637.5	1200	0	0	Croce	107
L1	680	1400	0	0	Croce	119
L1	0	200	0	0	Croce	2
L1	637.5	200	0	0	Croce	102
L1	680	1600	0	0	Croce	120

Livello	Punto		Estradosso	Angolo	Tipo	T.c.
	X	Y				
L1	680	600	0	0	Croce	115
L1	680	1200	0	0	Croce	118
L1	637.5	1400	0	0	Croce	108
L1	0	1400	0	0	Croce	8
L1	680	200	0	0	Croce	113
L1	637.5	1600	0	0	Croce	109
L1	0	1600	0	0	Croce	9

Livello	Punto		Estradosso	Angolo	Tipo	T.c.
	X	Y				
L1	0	600	0	0	Croce	4
L1	637.5	800	0	0	Croce	105
L1	637.5	0	0	0	Croce	101
L1	0	0	0	0	Croce	1
L1	0	2000	0	0	Croce	11
L1	637.5	2000	0	0	Croce	111
L1	0	1200	0	0	Croce	7
L1	0	1000	0	0	Croce	6
L1	0	1800	0	0	Croce	10
L1	680	400	0	0	Croce	114
L2	42.5	1200	0	0	Croce	19
L2	170.5	1000	0	0	Croce	42
L2	42.5	1600	0	0	Croce	21
L2	42.5	1400	0	0	Croce	20
L2	489.5	1400	0	0	Croce	75
L2	190.5	1600	0	0	Croce	54
L2	42.5	1800	0	0	Croce	22
L2	489.5	1800	0	0	Croce	77
L2	190.5	2000	0	0	Croce	56
L2	489.5	800	0	0	Croce	72
L2	190.5	200	0	0	Croce	52
L2	42.5	600	0	0	Croce	16
L2	42.5	800	0	0	Croce	17
L2	170.5	800	0	0	Croce	40
L2	489.5	600	0	0	Croce	71
L2	42.5	400	0	0	Croce	15
L2	190.5	400	0	0	Croce	53
L3	582	200	0	0	Croce	91
L3	98	400	0	0	Croce	26
L3	582	1400	0	0	Croce	97
L3	582	1800	0	0	Croce	99
L3	98	0	0	0	Croce	24
L3	582	2000	0	0	Croce	100
L3	98	1400	0	0	Croce	31
L3	582	1200	0	0	Croce	96
L3	582	1000	0	0	Croce	95
L3	98	800	0	0	Croce	28
L3	582	800	0	0	Croce	94
L4	509.5	0	0	0	Croce	79
L4	170.5	800	0	0	Croce	41
L4	509.5	1800	0	0	Croce	88
L4	170.5	1800	0	0	Croce	49
L4	509.5	1000	0	0	Croce	84
L4	509.5	800	0	0	Croce	83
L4	509.5	400	0	0	Croce	81
L4	170.5	1600	0	0	Croce	48
L4	170.5	1400	0	0	Croce	46
L4	170.5	1200	0	0	Croce	44
L4	509.5	1200	0	0	Croce	85
L5	340	0	0	0	Croce	57
L5	340	200	0	0	Croce	58
L5	340	1000	0	0	Croce	62
L5	340	1200	0	0	Croce	63
L5	340	2000	0	0	Croce	67

Livello	Punto		Estradosso	Angolo	Tipo	T.c.
	X	Y				
L1	680	800	0	0	Croce	116
L1	680	1800	0	0	Croce	121
L1	680	0	0	0	Croce	112
L1	637.5	1000	0	0	Croce	106
L1	680	2000	0	0	Croce	122
L1	637.5	1800	0	0	Croce	110
L1	680	1000	0	0	Croce	117
L1	0	800	0	0	Croce	5
L1	637.5	400	0	0	Croce	103
L1	0	400	0	0	Croce	3
L2	489.5	2000	0	0	Croce	78
L2	489.5	1000	0	0	Croce	73
L2	489.5	1200	0	0	Croce	74
L2	170.5	1400	0	0	Croce	47
L2	42.5	1000	0	0	Croce	18
L2	489.5	1600	0	0	Croce	76
L2	190.5	1800	0	0	Croce	55
L2	42.5	2000	0	0	Croce	23
L2	170.5	1200	0	0	Croce	45
L2	42.5	0	0	0	Croce	12
L2	489.5	200	0	0	Croce	69
L2	190.5	0	0	0	Croce	51
L2	489.5	0	0	0	Croce	68
L2	42.5	200	0	0	Croce	14
L2	170.5	600	0	0	Croce	38
L2	489.5	400	0	0	Croce	70
L3	98	200	0	0	Croce	25
L3	98	1600	0	0	Croce	32
L3	582	400	0	0	Croce	92
L3	98	1800	0	0	Croce	33
L3	582	0	0	0	Croce	90
L3	98	2000	0	0	Croce	34
L3	582	1600	0	0	Croce	98
L3	98	1000	0	0	Croce	29
L3	98	600	0	0	Croce	27
L3	98	1200	0	0	Croce	30
L3	582	600	0	0	Croce	93
L4	170.5	0	0	0	Croce	35
L4	509.5	600	0	0	Croce	82
L4	170.5	2000	0	0	Croce	50
L4	509.5	2000	0	0	Croce	89
L4	170.5	1000	0	0	Croce	43
L4	170.5	200	0	0	Croce	36
L4	170.5	400	0	0	Croce	37
L4	509.5	1600	0	0	Croce	87
L4	509.5	200	0	0	Croce	80
L4	509.5	1400	0	0	Croce	86
L4	170.5	600	0	0	Croce	39
L5	340	1400	0	0	Croce	64
L5	340	600	0	0	Croce	60
L5	340	800	0	0	Croce	61
L5	340	1600	0	0	Croce	65
L5	340	1800	0	0	Croce	66
L5	340	400	0	0	Croce	59

6.5.2 Travi in acciaio

6.5.2.1 Travi in acciaio di piano

***Sezione**: sezione in acciaio.*
***P.i.**: posizione dei punti d'inserimento rispetto alla geometria della sezione. S=Sinistra, C=Centro, D=Destra*
***Liv.**: quota del punto di inserimento iniziale. esprimibile come livello, falda, piano orizzontale alla Z specificata. [cm]*
***Punto i.**: punto di inserimento iniziale.*
***X**: coordinata X. [cm]*
***Y**: coordinata Y. [cm]*
***Punto f.**: punto di inserimento finale.*
***X**: coordinata X. [cm]*
***Y**: coordinata Y. [cm]*
***Estr.**: distanza dalla quota di inserimento misurata in direzione ortogonale al piano della quota e con verso positivo verso l'alto. [cm]*
***Mat.**: riferimento ad una definizione di materiale in acciaio.*
***Car.lin.**: riferimento alla definizione di un carico lineare.L: valori del carico espressi nel sistema locale dell'elemento.G: valori del carico espressi nel sistema globale.*
***Sovr.**: aliquota di sovraresistenza da assicurare in verifica.*
***S.Z**: indica se l'elemento deve essere verificato considerando il sisma verticale.*
***C.i.**: svincolo o cerniera da applicare al relativo estremo dell'asta nel modello.*
***C.f.**: svincolo o cerniera da applicare al relativo estremo dell'asta nel modello.*
***P.lin.**: peso per unità di lunghezza. [daN/cm]*
***Cal.**: descrizione sintetica dell'eventuale calastrello della sezione accoppiata o composita.*

Sezione	P.i.	Liv.	Punto i.		Punto f.		Estr.	Mat.	Car.lin.	Sovr.	S.Z	C.i.	C.f.	P.lin.	Cal.
			X	Y	X	Y									
HEA160	C	L2	637.5	0	489.5	0	0	S275	Nessuno; G	0	No	Svincolo: M2, M3	No	0.3	
HEA160	C	L2	190.5	1800	42.5	1800	0	S275	Nessuno; G	0	No	No	Svincolo: M2, M3	0.3	
HEA160	C	L2	637.5	2000	489.5	2000	0	S275	Nessuno; G	0	No	Svincolo: M2, M3	No	0.3	
HEA160	C	L2	489.5	2000	190.5	2000	0	S275	Nessuno; G	0	No	No	No	0.3	
HEA160	C	L2	190.5	2000	42.5	2000	0	S275	Nessuno; G	0	No	No	Svincolo: M2, M3	0.3	
HEA160	C	L2	637.5	1999.7	637.5	1800	0	S275	Nessuno; G	0	No	Svincolo: M2, M3	Svincolo: M2, M3	0.3	
HEA160	C	L2	42.5	2000	42.5	1800	0	S275	Nessuno; G	0	No	Svincolo: M2, M3	Svincolo: M2, M3	0.3	
HEA160	C	L2	637.5	1799.7	637.5	1600	0	S275	Nessuno; G	0	No	Svincolo: M2, M3	Svincolo: M2, M3	0.3	
HEA160	C	L2	42.5	1800	42.5	1600	0	S275	Nessuno; G	0	No	Svincolo: M2, M3	Svincolo: M2, M3	0.3	
HEA160	C	L2	637.5	1599.7	637.5	1400	0	S275	Nessuno; G	0	No	Svincolo: M2, M3	Svincolo: M2, M3	0.3	
HEA160	C	L2	42.5	1600	42.5	1400	0	S275	Nessuno; G	0	No	Svincolo: M2, M3	Svincolo: M2, M3	0.3	
HEA160	C	L2	42.5	200	42.5	100	0	S275	Nessuno; G	0	No	Svincolo: M2, M3	No	0.3	
HEA160	C	L2	489.5	1800	190.5	1800	0	S275	Nessuno; G	0	No	No	No	0.3	
HEA220	C	L2	637.5	1399.7	637.5	1200	0	S275	Nessuno; G	0	No	Svincolo: M2, M3	Svincolo: M2, M3	0.51	
HEA220	C	L2	637.5	1199.7	637.5	1000	0	S275	Nessuno; G	0	No	Svincolo: M2, M3	Svincolo: M2, M3	0.51	
HEA220	C	L2	42.5	1200	42.5	1000	0	S275	Nessuno; G	0	No	Svincolo: M2, M3	Svincolo: M2, M3	0.51	
HEA220	C	L2	637.5	999.7	637.5	800	0	S275	Nessuno; G	0	No	Svincolo: M2, M3	Svincolo: M2, M3	0.51	
HEA220	C	L2	42.5	1000	42.5	800	0	S275	Nessuno; G	0	No	Svincolo: M2, M3	Svincolo: M2, M3	0.51	
HEA220	C	L2	637.5	799.7	637.5	600	0	S275	Nessuno; G	0	No	Svincolo: M2, M3	Svincolo: M2, M3	0.51	
HEA220	C	L2	42.5	800	42.5	600	0	S275	Nessuno; G	0	No	Svincolo: M2, M3	Svincolo: M2, M3	0.51	
HEA160	C	L2	637.5	599.7	637.5	400	0	S275	Nessuno; G	0	No	Svincolo: M2, M3	Svincolo: M2, M3	0.3	
HEA160	C	L2	637.5	399.7	637.5	200	0	S275	Nessuno; G	0	No	Svincolo: M2, M3	Svincolo: M2, M3	0.3	
HEA160	C	L2	637.5	199.7	637.5	0	0	S275	Nessuno; G	0	No	Svincolo: M2, M3	Svincolo: M2, M3	0.3	
HEA160	C	L2	42.5	600	42.5	400	0	S275	Nessuno; G	0	No	Svincolo: M2, M3	Svincolo: M2, M3	0.3	
HEA160	C	L2	42.5	400	42.5	200	0	S275	Nessuno; G	0	No	Svincolo: M2, M3	Svincolo: M2, M3	0.3	
HEA220	C	L2	42.5	1400	42.5	1200	0	S275	Nessuno; G	0	No	Svincolo: M2, M3	Svincolo: M2, M3	0.51	
HEA160	C	L2	637.5	1800	489.5	1800	0	S275	Nessuno; G	0	No	Svincolo: M2, M3	No	0.3	
HEA160	C	L2	42.5	100	42.5	0	0	S275	Nessuno; G	0	No	No	Svincolo: M2, M3	0.3	
HEA160	C	L2	489.5	1600	190.5	1600	0	S275	Nessuno; G	0	No	No	No	0.3	
HEA160	C	L2	170.5	600	42.5	600	0	S275	Nessuno; G	0	No	No	Svincolo: M2, M3	0.3	
HEA160	C	L2	637.5	800	509.5	800	0	S275	Nessuno; G	0	No	Svincolo: M2, M3	No	0.3	
HEA160	C	L2	509.5	800	170.5	800	0	S275	Nessuno; G	0	No	No	No	0.3	
HEA160	C	L2	509.5	600	170.5	600	0	S275	Nessuno; G	0	No	No	No	0.3	
HEA160	C	L2	190.5	1600	42.5	1600	0	S275	Nessuno; G	0	No	No	Svincolo: M2, M3	0.3	
HEA160	C	L2	637.5	200	489.5	200	0	S275	Nessuno; G	0	No	Svincolo: M2, M3	No	0.3	
HEA160	C	L2	170.5	800	42.5	800	0	S275	Nessuno; G	0	No	No	Svincolo: M2, M3	0.3	
HEA160	C	L2	637.5	1000	509.5	1000	0	S275	Nessuno; G	0	No	Svincolo: M2, M3	No	0.3	
HEA160	C	L2	509.5	1000	170.5	1000	0	S275	Nessuno; G	0	No	No	No	0.3	
HEA160	C	L2	637.5	600	509.5	600	0	S275	Nessuno; G	0	No	Svincolo: M2, M3	No	0.3	
HEA160	C	L2	637.5	400	489.5	400	0	S275	Nessuno; G	0	No	Svincolo: M2, M3	No	0.3	
HEA160	C	L2	489.5	400	190.5	400	0	S275	Nessuno; G	0	No	No	No	0.3	
HEA160	C	L2	170.5	1000	42.5	1000	0	S275	Nessuno; G	0	No	No	Svincolo: M2, M3	0.3	
HEA160	C	L2	190.5	200	42.5	200	0	S275	Nessuno; G	0	No	No	Svincolo: M2, M3	0.3	
HEA160	C	L2	190.5	400	42.5	400	0	S275	Nessuno; G	0	No	No	Svincolo: M2, M3	0.3	
HEA160	C	L2	637.5	1600	489.5	1600	0	S275	Nessuno; G	0	No	Svincolo: M2, M3	No	0.3	
HEA160	C	L2	170.5	1400	42.5	1400	0	S275	Nessuno; G	0	No	No	Svincolo: M2, M3	0.3	
HEA160	C	L2	509.5	1400	170.5	1400	0	S275	Nessuno; G	0	No	No	No	0.3	
HEA160	C	L2	637.5	1400	509.5	1400	0	S275	Nessuno; G	0	No	Svincolo: M2, M3	No	0.3	
HEA160	C	L2	489.5	200	190.5	200	0	S275	Nessuno; G	0	No	No	No	0.3	

Sezione	P.i.	Liv.	Punto i.		Punto f.		Estr.	Mat.	Car.lin.	Sovr.	S.Z	C.i.	C.f.	P.lin.	Cal.
			X	Y	X	Y									
HEA160	C	L2	637.5	1200	509.5	1200	0	S275	Nessuno; G	0	No	Svincolo: M2, M3	No	0.3	
HEA160	C	L2	170.5	1200	42.5	1200	0	S275	Nessuno; G	0	No	No	Svincolo: M2, M3	0.3	
HEA160	C	L2	489.5	0	190.5	0	0	S275	Nessuno; G	0	No	No	No	0.3	
HEA160	C	L2	190.5	0	42.5	0	0	S275	Nessuno; G	0	No	No	Svincolo: M2, M3	0.3	
HEA160	C	L2	509.5	1200	170.5	1200	0	S275	Nessuno; G	0	No	No	No	0.3	
HEA160	C	L3	582	400	582	200	0	S275	Nessuno; G	0	No	Svincolo: M2, M3	Svincolo: M2, M3	0.3	
HEA220	C	L3	98	800	98	600	0	S275	Nessuno; G	0	No	Svincolo: M2, M3	Svincolo: M2, M3	0.51	
HEA220	C	L3	582	1000	582	800	0	S275	Nessuno; G	0	No	Svincolo: M2, M3	Svincolo: M2, M3	0.51	
HEA220	C	L3	98	1000	98	800	0	S275	Nessuno; G	0	No	Svincolo: M2, M3	Svincolo: M2, M3	0.51	
HEA220	C	L3	582	800	582	600	0	S275	Nessuno; G	0	No	Svincolo: M2, M3	Svincolo: M2, M3	0.51	
HEA160	C	L3	98	600	98	400	0	S275	Nessuno; G	0	No	Svincolo: M2, M3	Svincolo: M2, M3	0.3	
HEA220	C	L3	98	1200	98	1000	0	S275	Nessuno; G	0	No	Svincolo: M2, M3	Svincolo: M2, M3	0.51	
HEA160	C	L3	582	600	582	400	0	S275	Nessuno; G	0	No	Svincolo: M2, M3	Svincolo: M2, M3	0.3	
HEA160	C	L3	98	400	98	200	0	S275	Nessuno; G	0	No	Svincolo: M2, M3	Svincolo: M2, M3	0.3	
HEA160	C	L3	582	2000	582	1800	0	S275	Nessuno; G	0	No	Svincolo: M2, M3	Svincolo: M2, M3	0.3	
HEA160	C	L3	98	2000	98	1800	0	S275	Nessuno; G	0	No	Svincolo: M2, M3	Svincolo: M2, M3	0.3	
HEA160	C	L3	582	1800	582	1600	0	S275	Nessuno; G	0	No	Svincolo: M2, M3	Svincolo: M2, M3	0.3	
HEA160	C	L3	98	1800	98	1600	0	S275	Nessuno; G	0	No	Svincolo: M2, M3	Svincolo: M2, M3	0.3	
HEA220	C	L3	582	1200	582	1000	0	S275	Nessuno; G	0	No	Svincolo: M2, M3	Svincolo: M2, M3	0.51	
HEA160	C	L3	582	1600	582	1400	0	S275	Nessuno; G	0	No	Svincolo: M2, M3	Svincolo: M2, M3	0.3	
HEA160	C	L3	98	200	98	0	0	S275	Nessuno; G	0	No	Svincolo: M2, M3	Svincolo: M2, M3	0.3	
HEA160	C	L3	582	200	582	0	0	S275	Nessuno; G	0	No	Svincolo: M2, M3	Svincolo: M2, M3	0.3	
HEA220	C	L3	582	1400	582	1200	0	S275	Nessuno; G	0	No	Svincolo: M2, M3	Svincolo: M2, M3	0.51	
HEA220	C	L3	98	1400	98	1200	0	S275	Nessuno; G	0	No	Svincolo: M2, M3	Svincolo: M2, M3	0.51	
HEA160	C	L3	98	1600	98	1400	0	S275	Nessuno; G	0	No	Svincolo: M2, M3	Svincolo: M2, M3	0.3	
HEA160	C	L4	170.5	600	170.5	400	0	S275	Nessuno; G	0	No	Svincolo: M2, M3	Svincolo: M2, M3	0.3	
HEA160	C	L4	509.5	200	509.5	0	0	S275	Nessuno; G	0	No	Svincolo: M2, M3	Svincolo: M2, M3	0.3	
HEA160	C	L4	509.5	600	509.5	400	0	S275	Nessuno; G	0	No	Svincolo: M2, M3	Svincolo: M2, M3	0.3	
HEA160	C	L4	170.5	200	170.5	0	0	S275	Nessuno; G	0	No	Svincolo: M2, M3	Svincolo: M2, M3	0.3	
HEA160	C	L4	509.5	400	509.5	200	0	S275	Nessuno; G	0	No	Svincolo: M2, M3	Svincolo: M2, M3	0.3	
HEA160	C	L4	170.5	400	170.5	200	0	S275	Nessuno; G	0	No	Svincolo: M2, M3	Svincolo: M2, M3	0.3	
HEA220	C	L4	509.5	1200	509.5	1000	0	S275	Nessuno; G	0	No	Svincolo: M2, M3	Svincolo: M2, M3	0.51	
HEA160	C	L4	509.5	1600	509.5	1400	0	S275	Nessuno; G	0	No	Svincolo: M2, M3	Svincolo: M2, M3	0.3	
HEA220	C	L4	509.5	800	509.5	600	0	S275	Nessuno; G	0	No	Svincolo: M2, M3	Svincolo: M2, M3	0.51	
HEA160	C	L4	509.5	2000	509.5	1800	0	S275	Nessuno; G	0	No	Svincolo: M2, M3	Svincolo: M2, M3	0.3	
HEA220	C	L4	170.5	1000	170.5	800	0	S275	Nessuno; G	0	No	Svincolo: M2, M3	Svincolo: M2, M3	0.51	
HEA220	C	L4	509.5	1000	509.5	800	0	S275	Nessuno; G	0	No	Svincolo: M2, M3	Svincolo: M2, M3	0.51	
HEA160	C	L4	170.5	2000	170.5	1800	0	S275	Nessuno; G	0	No	Svincolo: M2, M3	Svincolo: M2, M3	0.3	
HEA220	C	L4	170.5	1200	170.5	1000	0	S275	Nessuno; G	0	No	Svincolo: M2, M3	Svincolo: M2, M3	0.51	
HEA220	C	L4	170.5	1400	170.5	1200	0	S275	Nessuno; G	0	No	Svincolo: M2, M3	Svincolo: M2, M3	0.51	
HEA220	C	L4	509.5	1400	509.5	1200	0	S275	Nessuno; G	0	No	Svincolo: M2, M3	Svincolo: M2, M3	0.51	
HEA220	C	L4	170.5	800	170.5	600	0	S275	Nessuno; G	0	No	Svincolo: M2, M3	Svincolo: M2, M3	0.51	
HEA160	C	L4	509.5	1800	509.5	1600	0	S275	Nessuno; G	0	No	Svincolo: M2, M3	Svincolo: M2, M3	0.3	
HEA160	C	L4	170.5	1600	170.5	1400	0	S275	Nessuno; G	0	No	Svincolo: M2, M3	Svincolo: M2, M3	0.3	
HEA160	C	L4	170.5	1800	170.5	1600	0	S275	Nessuno; G	0	No	Svincolo: M2, M3	Svincolo: M2, M3	0.3	
HEA160	C	L5	340	200	340	0	0	S275	Nessuno; G	0	No	Svincolo: M2, M3	Svincolo: M2, M3	0.3	
HEA160	C	L5	340	2000	340	1800	0	S275	Nessuno; G	0	No	Svincolo: M2, M3	Svincolo: M2, M3	0.3	
HEA160	C	L5	340	1600	340	1400	0	S275	Nessuno; G	0	No	Svincolo: M2, M3	Svincolo: M2, M3	0.3	
HEA160	C	L5	340	400	340	200	0	S275	Nessuno; G	0	No	Svincolo: M2, M3	Svincolo: M2, M3	0.3	

Sezione	P.i.	Liv.	Punto i.		Punto f.		Estr.	Mat.	Car.lin.	Sovr.	S.Z	C.i.	C.f.	P.lin.	Cal.
			X	Y	X	Y									
HEA240	C	L5	340	1400	340	1200	0	S275	Nessuno; G	0	No	Svincolo: M2, M3	Svincolo: M2, M3	0.6	
HEA160	C	L5	340	600	340	400	0	S275	Nessuno; G	0	No	Svincolo: M2, M3	Svincolo: M2, M3	0.3	
HEA240	C	L5	340	1200	340	1000	0	S275	Nessuno; G	0	No	Svincolo: M2, M3	Svincolo: M2, M3	0.6	
HEA240	C	L5	340	1000	340	800	0	S275	Nessuno; G	0	No	Svincolo: M2, M3	Svincolo: M2, M3	0.6	
HEA160	C	L5	340	1800	340	1600	0	S275	Nessuno; G	0	No	Svincolo: M2, M3	Svincolo: M2, M3	0.3	
HEA240	C	L5	340	800	340	600	0	S275	Nessuno; G	0	No	Svincolo: M2, M3	Svincolo: M2, M3	0.6	

6.5.2.2 Travi in acciaio tra quote

***Sezione**: sezione in acciaio.*
***P.i.**: posizione dei punti d'inserimento rispetto alla geometria della sezione. S=Sinistra, C=Centro, D=Destra*
***Quota i.**: quota del punto di inserimento iniziale. esprimibile come livello, falda, piano orizzontale alla Z specificata. [cm]*
***Quota f.**: quota del punto di inserimento finale. esprimibile come livello, falda, piano orizzontale alla Z specificata. [cm]*
***Punto i.**: punto di inserimento iniziale.*
* ***X**: coordinata X. [cm]*
* ***Y**: coordinata Y. [cm]*
***Punto f.**: punto di inserimento finale.*
* ***X**: coordinata X. [cm]*
* ***Y**: coordinata Y. [cm]*
***Mat.**: riferimento ad una definizione di materiale in acciaio.*
***Car.lin.**: riferimento alla definizione di un carico lineare.L: valori del carico espressi nel sistema locale dell'elemento.G: valori del carico espressi nel sistema globale.*
***Sovr.**: aliquota di sovraresistenza da assicurare in verifica.*
***S.Z**: indica se l'elemento deve essere verificato considerando il sisma verticale.*
***C.i.**: svincolo o cerniera da applicare al relativo estremo dell'asta nel modello.*
***C.f.**: svincolo o cerniera da applicare al relativo estremo dell'asta nel modello.*
***P.lin.**: peso per unità di lunghezza. [daN/cm]*
***Cal.**: descrizione sintetica dell'eventuale calastrello della sezione accoppiata o composita.*

Sezione	P.i.	Quota i.	Quota f.	Punto i.		Punto f.		Mat.	Car.lin.	Sovr.	S.Z	C.i.	C.f.	P.lin.	Cal.
				X	Y	X	Y								
HEA180	C	L1	L2	0	0	42.5	0	S275	1; G	0	No	No	No	0.36	
UPN200	C	L1	L2	680	400	637.5	600	S275	Nessuno; G	0	No	Svincolo: M2, M3	Svincolo: M2, M3	0.25	
UPN200	C	L1	L2	680	600	637.5	400	S275	Nessuno; G	0	No	Svincolo: M2, M3	Svincolo: M2, M3	0.25	
UPN200	C	L1	L2	680	200	637.5	400	S275	Nessuno; G	0	No	Svincolo: M2, M3	Svincolo: M2, M3	0.25	
UPN200	C	L1	L2	680	400	637.5	200	S275	Nessuno; G	0	No	Svincolo: M2, M3	Svincolo: M2, M3	0.25	
UPN200	C	L1	L2	680	0	637.5	200	S275	Nessuno; G	0	No	Svincolo: M2, M3	Svincolo: M2, M3	0.25	
UPN200	C	L1	L2	680	200	637.5	0	S275	Nessuno; G	0	No	Svincolo: M2, M3	Svincolo: M2, M3	0.25	
HEA160	C	L1	L2	0	2000	190.5	2000	S275	Nessuno; G	0	No	Svincolo: M2, M3	Svincolo: M2, M3	0.3	
HEA160	C	L1	L2	680	2000	489.5	1999.7	S275	Nessuno; G	0	No	Svincolo: M2, M3	Svincolo: M2, M3	0.3	
HEA180	C	L1	L2	680	2000	637.5	2000	S275	1; G	0	No	No	No	0.36	
HEA180	C	L1	L2	0	2000	42.5	2000	S275	1; G	0	No	No	No	0.36	
HEA160	C	L1	L2	0	1800	190.5	1800	S275	Nessuno; G	0	No	Svincolo: M2, M3	Svincolo: M2, M3	0.3	
HEA160	C	L1	L2	680	1800	489.5	1799.7	S275	Nessuno; G	0	No	Svincolo: M2, M3	Svincolo: M2, M3	0.3	
HEA180	C	L1	L2	680	1800	637.5	1800	S275	1; G	0	No	No	No	0.36	
HEA180	C	L1	L2	0	1800	42.5	1800	S275	1; G	0	No	No	No	0.36	
HEA160	C	L1	L2	0	1600	190.5	1600	S275	Nessuno; G	0	No	Svincolo: M2, M3	Svincolo: M2, M3	0.3	
HEA160	C	L1	L2	680	1600	489.5	1599.7	S275	Nessuno; G	0	No	Svincolo: M2, M3	Svincolo: M2, M3	0.3	
HEA180	C	L1	L2	680	1600	637.5	1600	S275	1; G	0	No	No	No	0.36	
HEA180	C	L1	L2	0	1600	42.5	1600	S275	1; G	0	No	No	No	0.36	
HEA160	C	L1	L2	0	1400	170.5	1400	S275	Nessuno; G	0	No	Svincolo: M2, M3	Svincolo: M2, M3	0.3	
HEA160	C	L1	L2	680	1400	509.5	1399.7	S275	Nessuno; G	0	No	Svincolo: M2, M3	Svincolo: M2, M3	0.3	
UPN200	C	L1	L2	0	200	42.5	0	S275	Nessuno; G	0	No	Svincolo: M2, M3	Svincolo: M2, M3	0.25	
HEA240	C	L1	L2	680	1400	637.5	1400	S275	1; G	0	No	No	No	0.6	
HEA240	C	L1	L2	0	1400	42.5	1400	S275	1; G	0	No	No	No	0.6	
HEA160	C	L1	L2	0	1200	170.5	1200	S275	Nessuno; G	0	No	Svincolo: M2, M3	Svincolo: M2, M3	0.3	
HEA160	C	L1	L2	680	1200	509.5	1199.7	S275	Nessuno; G	0	No	Svincolo: M2, M3	Svincolo: M2, M3	0.3	
HEA240	C	L1	L2	680	1200	637.5	1200	S275	1; G	0	No	No	No	0.6	
HEA240	C	L1	L2	0	1200	42.5	1200	S275	1; G	0	No	No	No	0.6	
UPN200	C	L1	L2	680	800	637.5	600	S275	Nessuno; G	0	No	Svincolo: M2, M3	Svincolo: M2, M3	0.25	

Sezione	P.i.	Quota i.	Quota f.	Punto i.		Punto f.		Mat.	Car.lin.	Sovr.	S.Z	C.i.	C.f.	P.lin.	Cal.
				X	Y	X	Y								
UPN200	C	L1	L2	680	600	637.5	800	S275	Nessuno; G	0	No	Svincolo: M2, M3	Svincolo: M2, M3	0.25	
UPN200	C	L1	L2	680	1000	637.5	800	S275	Nessuno; G	0	No	Svincolo: M2, M3	Svincolo: M2, M3	0.25	
UPN200	C	L1	L2	680	800	637.5	1000	S275	Nessuno; G	0	No	Svincolo: M2, M3	Svincolo: M2, M3	0.25	
UPN200	C	L1	L2	0	200	42.5	400	S275	Nessuno; G	0	No	Svincolo: M2, M3	Svincolo: M2, M3	0.25	
UPN200	C	L1	L2	0	400	42.5	200	S275	Nessuno; G	0	No	Svincolo: M2, M3	Svincolo: M2, M3	0.25	
UPN200	C	L1	L2	0	400	42.5	600	S275	Nessuno; G	0	No	Svincolo: M2, M3	Svincolo: M2, M3	0.25	
UPN200	C	L1	L2	0	600	42.5	400	S275	Nessuno; G	0	No	Svincolo: M2, M3	Svincolo: M2, M3	0.25	
UPN200	C	L1	L2	0	600	42.5	800	S275	Nessuno; G	0	No	Svincolo: M2, M3	Svincolo: M2, M3	0.25	
UPN200	C	L1	L2	0	800	42.5	600	S275	Nessuno; G	0	No	Svincolo: M2, M3	Svincolo: M2, M3	0.25	
UPN200	C	L1	L2	0	800	42.5	1000	S275	Nessuno; G	0	No	Svincolo: M2, M3	Svincolo: M2, M3	0.25	
UPN200	C	L1	L2	0	1000	42.5	800	S275	Nessuno; G	0	No	Svincolo: M2, M3	Svincolo: M2, M3	0.25	
UPN200	C	L1	L2	0	1000	42.5	1200	S275	Nessuno; G	0	No	Svincolo: M2, M3	Svincolo: M2, M3	0.25	
UPN200	C	L1	L2	0	1200	42.5	1000	S275	Nessuno; G	0	No	Svincolo: M2, M3	Svincolo: M2, M3	0.25	
UPN200	C	L1	L2	0	1200	42.5	1400	S275	Nessuno; G	0	No	Svincolo: M2, M3	Svincolo: M2, M3	0.25	
UPN200	C	L1	L2	0	1400	42.5	1200	S275	Nessuno; G	0	No	Svincolo: M2, M3	Svincolo: M2, M3	0.25	
UPN200	C	L1	L2	0	1400	42.5	1600	S275	Nessuno; G	0	No	Svincolo: M2, M3	Svincolo: M2, M3	0.25	
HEA160	C	L1	L2	0	1000	170.5	1000	S275	Nessuno; G	0	No	Svincolo: M2, M3	Svincolo: M2, M3	0.3	
UPN200	C	L1	L2	0	1600	42.5	1400	S275	Nessuno; G	0	No	Svincolo: M2, M3	Svincolo: M2, M3	0.25	
UPN200	C	L1	L2	0	1800	42.5	1600	S275	Nessuno; G	0	No	Svincolo: M2, M3	Svincolo: M2, M3	0.25	
UPN200	C	L1	L2	0	1800	42.5	2000	S275	Nessuno; G	0	No	Svincolo: M2, M3	Svincolo: M2, M3	0.25	
UPN200	C	L1	L2	0	2000	42.5	1800	S275	Nessuno; G	0	No	Svincolo: M2, M3	Svincolo: M2, M3	0.25	
UPN200	C	L1	L2	680	1800	637.5	2000	S275	Nessuno; G	0	No	Svincolo: M2, M3	Svincolo: M2, M3	0.25	
UPN200	C	L1	L2	680	2000	637.5	1800	S275	Nessuno; G	0	No	Svincolo: M2, M3	Svincolo: M2, M3	0.25	
UPN200	C	L1	L2	680	1600	637.5	1800	S275	Nessuno; G	0	No	Svincolo: M2, M3	Svincolo: M2, M3	0.25	
UPN200	C	L1	L2	680	1800	637.5	1600	S275	Nessuno; G	0	No	Svincolo: M2, M3	Svincolo: M2, M3	0.25	
UPN200	C	L1	L2	680	1400	637.5	1600	S275	Nessuno; G	0	No	Svincolo: M2, M3	Svincolo: M2, M3	0.25	
UPN200	C	L1	L2	680	1600	637.5	1400	S275	Nessuno; G	0	No	Svincolo: M2, M3	Svincolo: M2, M3	0.25	
UPN200	C	L1	L2	680	1200	637.5	1400	S275	Nessuno; G	0	No	Svincolo: M2, M3	Svincolo: M2, M3	0.25	
UPN200	C	L1	L2	680	1400	637.5	1200	S275	Nessuno; G	0	No	Svincolo: M2, M3	Svincolo: M2, M3	0.25	
UPN200	C	L1	L2	680	1000	637.5	1200	S275	Nessuno; G	0	No	Svincolo: M2, M3	Svincolo: M2, M3	0.25	
UPN200	C	L1	L2	680	1200	637.5	1000	S275	Nessuno; G	0	No	Svincolo: M2, M3	Svincolo: M2, M3	0.25	
UPN200	C	L1	L2	0	1600	42.5	1800	S275	Nessuno; G	0	No	Svincolo: M2, M3	Svincolo: M2, M3	0.25	
HEA160	C	L1	L2	680	1000	509.5	999.7	S275	Nessuno; G	0	No	Svincolo: M2, M3	Svincolo: M2, M3	0.3	
UPN200	C	L1	L2	0	0	42.5	200	S275	Nessuno; G	0	No	Svincolo: M2, M3	Svincolo: M2, M3	0.25	
HEA160	C	L1	L2	0	200	190.5	200	S275	Nessuno; G	0	No	Svincolo: M2, M3	Svincolo: M2, M3	0.3	
HEA160	C	L1	L2	0	600	170.5	600	S275	Nessuno; G	0	No	Svincolo: M2, M3	Svincolo: M2, M3	0.3	
HEA240	C	L1	L2	0	800	42.5	800	S275	1; G	0	No	No	No	0.6	
HEA240	C	L1	L2	680	800	637.5	800	S275	1; G	0	No	No	No	0.6	
HEA240	C	L1	L2	680	600	637.5	600	S275	1; G	0	No	No	No	0.6	
HEA240	C	L1	L2	0	600	42.5	600	S275	1; G	0	No	No	No	0.6	
HEA160	C	L1	L2	680	200	489.5	199.7	S275	Nessuno; G	0	No	Svincolo: M2, M3	Svincolo: M2, M3	0.3	
HEA180	C	L1	L2	680	200	637.5	200	S275	1; G	0	No	No	No	0.36	
HEA180	C	L1	L2	0	200	42.5	200	S275	1; G	0	No	No	No	0.36	
HEA160	C	L1	L2	680	800	509.5	799.7	S275	Nessuno; G	0	No	Svincolo: M2, M3	Svincolo: M2, M3	0.3	
HEA160	C	L1	L2	0	800	170.5	800	S275	Nessuno; G	0	No	Svincolo: M2, M3	Svincolo: M2, M3	0.3	
HEA160	C	L1	L2	0	400	190.5	400	S275	Nessuno; G	0	No	Svincolo: M2, M3	Svincolo: M2, M3	0.3	
HEA160	C	L1	L2	680	400	489.5	399.7	S275	Nessuno; G	0	No	Svincolo: M2, M3	Svincolo: M2, M3	0.3	
HEA160	C	L1	L2	680	600	509.5	599.7	S275	Nessuno; G	0	No	Svincolo: M2, M3	Svincolo: M2, M3	0.3	
HEA240	C	L1	L2	0	1000	42.5	1000	S275	1; G	0	No	No	No	0.6	
HEA180	C	L1	L2	680	400	637.5	400	S275	1; G	0	No	No	No	0.36	
HEA180	C	L1	L2	0	400	42.5	400	S275	1; G	0	No	No	No	0.36	
HEA180	C	L1	L2	680	0	637.5	0	S275	1; G	0	No	No	No	0.36	
HEA160	C	L1	L2	0	0	190.5	0	S275	Nessuno; G	0	No	Svincolo: M2, M3	Svincolo: M2, M3	0.3	
HEA160	C	L1	L2	680	0	489.5	-0.3	S275	Nessuno; G	0	No	Svincolo: M2, M3	Svincolo: M2, M3	0.3	

Sezione	P.i.	Quota i.	Quota f.	Punto i.		Punto f.		Mat.	Car.lin.	Sovr.	S.Z	C.i.	C.f.	P.lin.	Cal.
				X	Y	X	Y								
HEA240	C	L1	L2	680	1000	637.5	1000	S275	1; G	0	No	No	No	0.6	
HEA160	C	L2	L5	170.5	800	340	800	S275	Nessuno; G	0	No	No	No	0.3	
HEA160	C	L2	L5	509.5	800	340	800	S275	Nessuno; G	0	No	No	No	0.3	
HEA160	C	L2	L5	170.5	600	340	600	S275	Nessuno; G	0	No	No	No	0.3	
HEA180	C	L2	L3	42.5	0	98	0	S275	1; G	0	No	No	No	0.36	
HEA160	C	L2	L5	509.5	600	340	600	S275	Nessuno; G	0	No	No	No	0.3	
HEA180	C	L2	L3	42.5	400	98	400	S275	1; G	0	No	No	No	0.36	
HEA160	C	L2	L5	509.5	1000	340	1000	S275	Nessuno; G	0	No	No	No	0.3	
HEA160	C	L2	L3	489.5	2000	582	2000	S275	Nessuno; G	0	No	Svincolo: M2, M3	Svincolo: M2, M3	0.3	
HEA240	C	L2	L3	637.5	600	582	600	S275	1; G	0	No	No	No	0.6	
HEA180	C	L2	L3	637.5	2000	582	2000	S275	1; G	0	No	No	No	0.36	
HEA240	C	L2	L3	42.5	1000	98	1000	S275	1; G	0	No	No	No	0.6	
HEA160	C	L2	L3	190.5	1800	98	1800	S275	Nessuno; G	0	No	Svincolo: M2, M3	Svincolo: M2, M3	0.3	
HEA160	C	L2	L3	190.5	2000	98	2000	S275	Nessuno; G	0	No	Svincolo: M2, M3	Svincolo: M2, M3	0.3	
HEA160	C	L2	L5	170.5	1000	340	1000	S275	Nessuno; G	0	No	No	No	0.3	
HEA160	C	L2	L5	509.5	1400	340	1400	S275	Nessuno; G	0	No	No	No	0.3	
HEA180	C	L2	L3	637.5	0	582	0	S275	1; G	0	No	No	No	0.36	
HEA160	C	L2	L5	170.5	1200	340	1200	S275	Nessuno; G	0	No	No	No	0.3	
HEA180	C	L2	L3	637.5	400	582	400	S275	1; G	0	No	No	No	0.36	
HEA160	C	L2	L5	170.5	1400	340	1400	S275	Nessuno; G	0	No	No	No	0.3	
HEA240	C	L2	L3	42.5	600	98	600	S275	1; G	0	No	No	No	0.6	
HEA160	C	L2	L3	190.5	200	98	200	S275	Nessuno; G	0	No	Svincolo: M2, M3	Svincolo: M2, M3	0.3	
HEA160	C	L2	L3	489.5	200	582	200	S275	Nessuno; G	0	No	Svincolo: M2, M3	Svincolo: M2, M3	0.3	
HEA160	C	L2	L3	489.5	1800	582	1800	S275	Nessuno; G	0	No	Svincolo: M2, M3	Svincolo: M2, M3	0.3	
HEA180	C	L2	L3	637.5	200	582	200	S275	1; G	0	No	No	No	0.36	
HEA180	C	L2	L3	42.5	200	98	200	S275	1; G	0	No	No	No	0.36	
HEA160	C	L2	L3	489.5	0	582	0	S275	Nessuno; G	0	No	Svincolo: M2, M3	Svincolo: M2, M3	0.3	
HEA160	C	L2	L3	190.5	400	98	400	S275	Nessuno; G	0	No	Svincolo: M2, M3	Svincolo: M2, M3	0.3	
HEA160	C	L2	L3	190.5	0	98	0	S275	Nessuno; G	0	No	Svincolo: M2, M3	Svincolo: M2, M3	0.3	
HEA160	C	L2	L3	489.5	400	582	400	S275	Nessuno; G	0	No	Svincolo: M2, M3	Svincolo: M2, M3	0.3	
HEA160	C	L2	L5	509.5	1200	340	1200	S275	Nessuno; G	0	No	No	No	0.3	
HEA240	C	L2	L3	637.5	1000	582	1000	S275	1; G	0	No	No	No	0.6	
HEA180	C	L2	L3	42.5	2000	98	2000	S275	1; G	0	No	No	No	0.36	
HEA240	C	L2	L3	637.5	1400	582	1400	S275	1; G	0	No	No	No	0.6	
HEA240	C	L2	L3	637.5	1200	582	1200	S275	1; G	0	No	No	No	0.6	
HEA240	C	L2	L3	42.5	1200	98	1200	S275	1; G	0	No	No	No	0.6	
HEA160	C	L2	L3	509.5	1200	582	1200	S275	Nessuno; G	0	No	Svincolo: M2, M3	Svincolo: M2, M3	0.3	
HEA160	C	L2	L3	170.5	1200	98	1200	S275	Nessuno; G	0	No	Svincolo: M2, M3	Svincolo: M2, M3	0.3	
HEA160	C	L2	L3	509.5	800	582	800	S275	Nessuno; G	0	No	Svincolo: M2, M3	Svincolo: M2, M3	0.3	
HEA160	C	L2	L3	170.5	800	98	800	S275	Nessuno; G	0	No	Svincolo: M2, M3	Svincolo: M2, M3	0.3	
HEA240	C	L2	L3	42.5	1400	98	1400	S275	1; G	0	No	No	No	0.6	
HEA160	C	L2	L3	170.5	1000	98	1000	S275	Nessuno; G	0	No	Svincolo: M2, M3	Svincolo: M2, M3	0.3	
HEA160	C	L2	L3	509.5	1000	582	1000	S275	Nessuno; G	0	No	Svincolo: M2, M3	Svincolo: M2, M3	0.3	
HEA240	C	L2	L3	637.5	800	582	800	S275	1; G	0	No	No	No	0.6	
HEA160	C	L2	L3	509.5	1400	582	1400	S275	Nessuno; G	0	No	Svincolo: M2, M3	Svincolo: M2, M3	0.3	
HEA160	C	L2	L3	170.5	1400	98	1400	S275	Nessuno; G	0	No	Svincolo: M2, M3	Svincolo: M2, M3	0.3	
HEA180	C	L2	L3	42.5	1600	98	1600	S275	1; G	0	No	No	No	0.36	
HEA180	C	L2	L3	637.5	1600	582	1600	S275	1; G	0	No	No	No	0.36	
HEA160	C	L2	L3	170.5	600	98	600	S275	Nessuno; G	0	No	Svincolo: M2, M3	Svincolo: M2, M3	0.3	
HEA240	C	L2	L3	42.5	800	98	800	S275	1; G	0	No	No	No	0.6	
HEA160	C	L2	L3	190.5	1600	98	1600	S275	Nessuno; G	0	No	Svincolo: M2, M3	Svincolo: M2, M3	0.3	
HEA160	C	L2	L3	509.5	600	582	600	S275	Nessuno; G	0	No	Svincolo: M2, M3	Svincolo: M2, M3	0.3	
HEA180	C	L2	L3	637.5	1800	582	1800	S275	1; G	0	No	No	No	0.36	
HEA180	C	L2	L3	42.5	1800	98	1800	S275	1; G	0	No	No	No	0.36	
HEA160	C	L2	L3	489.5	1600	582	1600	S275	Nessuno; G	0	No	Svincolo: M2, M3	Svincolo: M2, M3	0.3	
HEA180	C	L3	L4	582	0	509.5	0	S275	2; G	0	No	No	No	0.36	
HEA240	C	L3	L4	98	1200	170.5	1200	S275	2; G	0	No	No	No	0.6	
HEA240	C	L3	L4	582	1200	509.5	1200	S275	2; G	0	No	No	No	0.6	
HEA240	C	L3	L4	98	1000	170.5	1000	S275	2; G	0	No	No	No	0.6	
HEA180	C	L3	L4	582	1800	509.5	1800	S275	2; G	0	No	No	No	0.36	
HEA180	C	L3	L4	98	1800	170.5	1800	S275	2; G	0	No	No	No	0.36	
HEA240	C	L3	L4	582	1000	509.5	1000	S275	2; G	0	No	No	No	0.6	
HEA240	C	L3	L4	582	600	509.5	600	S275	2; G	0	No	No	No	0.6	
HEA180	C	L3	L4	98	200	170.5	200	S275	2; G	0	No	No	No	0.36	
HEA180	C	L3	L4	582	200	509.5	200	S275	2; G	0	No	No	No	0.36	

Sezione	P.i.	Quota i.	Quota f.	Punto i.		Punto f.		Mat.	Car.lin.	Sovr.	S.Z	C.i.	C.f.	P.lin.	Cal.
				X	Y	X	Y								
HEA180	C	L3	L4	98	2000	170.5	2000	S275	2; G	0	No	No	No	0.36	
HEA180	C	L3	L4	582	400	509.5	400	S275	2; G	0	No	No	No	0.36	
HEA240	C	L3	L4	98	1400	170.5	1400	S275	2; G	0	No	No	No	0.6	
HEA240	C	L3	L4	582	1400	509.5	1400	S275	2; G	0	No	No	No	0.6	
HEA240	C	L3	L4	582	800	509.5	800	S275	2; G	0	No	No	No	0.6	
HEA240	C	L3	L4	98	800	170.5	800	S275	2; G	0	No	No	No	0.6	
HEA180	C	L3	L4	98	0	170.5	0	S275	2; G	0	No	No	No	0.36	
HEA240	C	L3	L4	98	600	170.5	600	S275	2; G	0	No	No	No	0.6	
HEA180	C	L3	L4	98	400	170.5	400	S275	2; G	0	No	No	No	0.36	
HEA180	C	L3	L4	98	1600	170.5	1600	S275	2; G	0	No	No	No	0.36	
HEA180	C	L3	L4	582	1600	509.5	1600	S275	2; G	0	No	No	No	0.36	
HEA180	C	L3	L4	582	2000	509.5	2000	S275	2; G	0	No	No	No	0.36	
HEA180	C	L4	L5	170.5	0	340.9	0	S275	3; G	0	No	No	No	0.36	
HEA240	C	L4	L5	509.5	1000	340	1000	S275	3; G	0	No	No	No	0.6	
HEA180	C	L4	L5	509.5	0	340	0	S275	3; G	0	No	No	No	0.36	
HEA240	C	L4	L5	170.5	1000	340.9	1000	S275	3; G	0	No	No	No	0.6	
HEA180	C	L4	L5	509.5	1800	340	1800	S275	3; G	0	No	No	No	0.36	
HEA180	C	L4	L5	170.5	400	340.9	400	S275	3; G	0	No	No	No	0.36	
HEA240	C	L4	L5	170.5	600	340.9	600	S275	3; G	0	No	No	No	0.6	
HEA240	C	L4	L5	509.5	600	340	600	S275	3; G	0	No	No	No	0.6	
HEA180	C	L4	L5	509.5	2000	340	2000	S275	3; G	0	No	No	No	0.36	
HEA180	C	L4	L5	170.5	2000	340.9	2000	S275	3; G	0	No	No	No	0.36	
HEA180	C	L4	L5	170.5	1600	340.9	1600	S275	3; G	0	No	No	No	0.36	
HEA180	C	L4	L5	509.5	1600	340	1600	S275	3; G	0	No	No	No	0.36	
HEA180	C	L4	L5	509.5	400	340	400	S275	3; G	0	No	No	No	0.36	
HEA240	C	L4	L5	170.5	1400	340.9	1400	S275	3; G	0	No	No	No	0.6	
HEA180	C	L4	L5	170.5	200	340.9	200	S275	3; G	0	No	No	No	0.36	
HEA180	C	L4	L5	509.5	200	340	200	S275	3; G	0	No	No	No	0.36	
HEA240	C	L4	L5	509.5	800	340	800	S275	3; G	0	No	No	No	0.6	
HEA240	C	L4	L5	170.5	800	340.9	800	S275	3; G	0	No	No	No	0.6	
HEA240	C	L4	L5	170.5	1200	340.9	1200	S275	3; G	0	No	No	No	0.6	
HEA240	C	L4	L5	509.5	1200	340	1200	S275	3; G	0	No	No	No	0.6	
HEA180	C	L4	L5	170.5	1800	340.9	1800	S275	3; G	0	No	No	No	0.36	
HEA240	C	L4	L5	509.5	1400	340	1400	S275	3; G	0	No	No	No	0.6	

6.5.3 Carichi superficiali

6.5.3.1 Carichi superficiali di falda

***Carico**: riferimento alla definizione di un carico di superficie.*
***Solaio**: caratteristiche dell'eventuale solaio in latero-cemento, C.A. o legno.*
***Falda**: quota di inserimento espressa con notazione breve esprimibile come livello, falda, piano orizzontale alla Z specificata. [cm]*
***Punti**: punti di definizione in pianta.*
***Indice**: indice del punto corrente nell'insieme dei punti di definizione dell'elemento.*
***X**: coordinata X. [cm]*
***Y**: coordinata Y. [cm]*
***Estr.**: distanza dalla quota di inserimento misurata in direzione ortogonale al piano della quota e con verso positivo verso l'alto. [cm]*
***Angolo**: direzione delle nervature che trasmettono il carico.Angolo misurato dal semiasse positivo delle ascisse in verso antiorario. [deg]*
***Comp.**: descrizione sintetica del comportamento del carico superficiale o, nel caso di comportamento membranale, riferimento alla decrizione analitica della membrana.*
***Fori**: riferimenti a tutti gli elementi che forano il carico superficiale.*

Carico	Solaio	Falda	Punti			Estr.	Angolo	Comp.	Fori
			Indice	X	Y				
5		F1	1	98	1200	0	0	Nessuno	
			2	170.5	1200				
			3	169.1	1400				
			4	98	1400				
5		F1	1	98	1000	0	0	Nessuno	
			2	170.5	1000				
			3	169.1	1200				
			4	98	1200				
2		F1	1	98	1600	0	0	Nessuno	
			2	170.5	1600				
			3	170.5	1800				
			4	98	1800				
2		F1	1	98	600	0	0	Nessuno	
			2	170.5	600				
			3	169.1	800				
			4	98	800				
2		F1	1	98	200	0	0	Nessuno	
			2	170.5	200				
			3	170.5	400				
			4	98	400				
2		F1	1	98	1400	0	0	Nessuno	
			2	170.5	1400				
			3	170.5	1600				
			4	98	1600				
2		F1	1	98	1800	0	0	Nessuno	
			2	170.5	1800				
			3	170.5	2000				
			4	98	2000				
2		F1	1	98	800	0	0	Nessuno	
			2	170.5	800				
			3	169.1	1000				
			4	98	1000				

Carico	Solaio	Falda	Punti			Estr.	Angolo	Comp.	Fori
			Indice	X	Y				
2		F1	1	98	0	0	0	Nessuno	
			2	170.5	0				
			3	170.5	200				
			4	98	200				
2		F1	1	98	400	0	0	Nessuno	
			2	170.5	400				
			3	170.5	600				
			4	98	600				
2		F2	1	170.5	400	0	0	Nessuno	
			2	340	400				
			3	340	600				
			4	170.5	600				
3		F2	1	170.5	1400	0	0	Nessuno	
			2	340	1400				
			3	340	1600				
			4	170.5	1600				
2		F2	1	170.5	1800	0	0	Nessuno	
			2	340	1800				
			3	340	2000				
			4	170.5	2000				
2		F2	1	170.5	1600	0	0	Nessuno	
			2	340	1600				
			3	340	1800				
			4	170.5	1800				
5		F2	1	170.5	1200	0	0	Nessuno	
			2	170.5	1000				
			3	340	1000				
			4	340	1200				
6		F2	1	170.5	600	0	0	Nessuno	
			2	340	600				
			3	340	800				
			4	170.5	800				
2		F2	1	170.5	1400	0	0	Nessuno	
			2	340	1400				
			3	340	1600				
			4	170.5	1600				
2		F2	1	170.5	0	0	0	Nessuno	
			2	340	0				
			3	340	200				
			4	170.5	200				
5		F2	1	170.5	1400	0	0	Nessuno	
			2	170.5	1200				
			3	340	1200				
			4	340	1400				
1		F2	1	170.5	0	0	0	Nessuno	
			2	340	0				
			3	340	200				
			4	170.5	200				
3		F2	1	170.5	1600	0	0	Nessuno	
			2	340	1600				
			3	340	1800				
			4	170.5	1800				
2		F2	1	170.5	200	0	0	Nessuno	
			2	340	200				
			3	340	400				
			4	170.5	400				
4		F2	1	170.5	1200	0	0	Nessuno	
			2	340	1200				
			3	340	1400				
			4	170.5	1400				
6		F2	1	170.5	800	0	0	Nessuno	
			2	340	800				
			3	340	1000				
			4	170.5	1000				
1		F2	1	170.5	200	0	0	Nessuno	
			2	340	200				
			3	340	400				
			4	170.5	400				
4		F2	1	170.5	1000	0	0	Nessuno	
			2	340	1000				
			3	340	1200				
			4	170.5	1200				
3		F2	1	170.5	1800	0	0	Nessuno	
			2	340	1800				
			3	340	2000				
			4	170.5	2000				
2		F3	1	0	1800	0	0	Nessuno	
			2	42.5	1800				
			3	42.5	2000				
			4	0	2000				
2		F3	1	0	200	0	0	Nessuno	
			2	42.5	200				
			3	42.5	400				
			4	0	400				
2		F3	1	0	400	0	0	Nessuno	
			2	42.5	400				
			3	42.5	600				
			4	0	600				
5		F3	1	0	1000	0	0	Nessuno	
			2	42.5	1000				
			3	42.5	1200				
			4	0	1200				
2		F3	1	0	1600	0	0	Nessuno	
			2	42.5	1600				
			3	42.5	1800				

Carico	Solaio	Falda	Punti			Estr.	Angolo	Comp.	Fori
			Indice	X	Y				
			4	0	1800				
2		F3	1	0	1400	0	0	Nessuno	
			2	42.5	1400				
			3	42.5	1600				
			4	0	1600				
2		F3	1	0	0	0	0	Nessuno	
			2	42.5	0				
			3	42.5	200				
			4	0	200				
2		F3	1	0	800	0	0	Nessuno	
			2	42.5	800				
			3	42.5	1000				
			4	0	1000				
2		F3	1	0	600	0	0	Nessuno	
			2	42.5	600				
			3	42.5	800				
			4	0	800				
5		F3	1	0	1200	0	0	Nessuno	
			2	42.5	1200				
			3	42.5	1400				
			4	0	1400				
2		F4	1	42.5	0	0	0	Nessuno	
			2	98	0				
			3	98	200				
			4	42.5	200				
2		F4	1	42.5	400	0	0	Nessuno	
			2	98	400				
			3	98	600				
			4	42.5	600				
2		F4	1	42.5	200	0	0	Nessuno	
			2	98	200				
			3	98	400				
			4	42.5	400				
2		F4	1	42.5	1400	0	0	Nessuno	
			2	98	1400				
			3	98	1600				
			4	42.5	1600				
5		F4	1	42.5	1200	0	0	Nessuno	
			2	98	1200				
			3	98	1400				
			4	42.5	1400				
2		F4	1	42.5	1600	0	0	Nessuno	
			2	98	1600				
			3	98	1800				
			4	42.5	1800				
2		F4	1	42.5	800	0	0	Nessuno	
			2	98	800				
			3	98	1000				
			4	42.5	1000				
5		F4	1	42.5	1000	0	0	Nessuno	
			2	98	1000				
			3	98	1200				
			4	42.5	1200				
2		F4	1	42.5	600	0	0	Nessuno	
			2	98	600				
			3	98	800				
			4	42.5	800				
2		F4	1	42.5	1800	0	0	Nessuno	
			2	98	1800				
			3	98	2000				
			4	42.5	2000				
2		F5	1	637.5	600	0	0	Nessuno	
			2	680	600				
			3	680	800				
			4	637.5	800				
5		F5	1	637.5	1200	0	0	Nessuno	
			2	680	1200				
			3	680	1400				
			4	637.5	1400				
2		F5	1	637.5	800	0	0	Nessuno	
			2	680	800				
			3	680	1000				
			4	637.5	1000				
5		F5	1	637.5	1000	0	0	Nessuno	
			2	680	1000				
			3	680	1200				
			4	637.5	1200				
2		F5	1	637.5	400	0	0	Nessuno	
			2	680	400				
			3	680	600				
			4	637.5	600				
2		F5	1	637.5	0	0	0	Nessuno	
			2	680	0				
			3	680	200				
			4	637.5	200				
2		F5	1	637.5	200	0	0	Nessuno	
			2	680	200				
			3	680	400				
			4	637.5	400				
2		F5	1	637.5	1800	0	0	Nessuno	
			2	680	1800				
			3	680	2000				
			4	637.5	2000				
2		F5	1	637.5	1600	0	0	Nessuno	
			2	680	1600				

Carico	Solaio	Falda	Punti			Estr.	Angolo	Comp.	Fori
			Indice	X	Y				
			3	680	1800				
			4	637.5	1800				
2		F5	1	637.5	1400	0	0	Nessuno	
			2	680	1400				
			3	680	1600				
			4	637.5	1600				
2		F6	1	582	400	0	0	Nessuno	
			2	637.5	400				
			3	637.5	600				
			4	582	600				
2		F6	1	582	600	0	0	Nessuno	
			2	637.5	600				
			3	637.5	800				
			4	582	800				
2		F6	1	582	0	0	0	Nessuno	
			2	637.5	0				
			3	637.5	200				
			4	582	200				
2		F6	1	582	200	0	0	Nessuno	
			2	637.5	200				
			3	637.5	400				
			4	582	400				
2		F6	1	582	800	0	0	Nessuno	
			2	637.5	800				
			3	637.5	1000				
			4	582	1000				
2		F6	1	582	1800	0	0	Nessuno	
			2	637.5	1800				
			3	637.5	2000				
			4	582	2000				
2		F6	1	582	1600	0	0	Nessuno	
			2	637.5	1600				
			3	637.5	1800				
			4	582	1800				
5		F6	1	582	1200	0	0	Nessuno	
			2	637.5	1200				
			3	637.5	1400				
			4	582	1400				
5		F6	1	582	1000	0	0	Nessuno	
			2	637.5	1000				
			3	637.5	1200				
			4	582	1200				
2		F6	1	582	1400	0	0	Nessuno	
			2	637.5	1400				
			3	637.5	1600				
			4	582	1600				
5		F7	1	509.5	1200	0	0	Nessuno	
			2	582	1200				
			3	582	1400				
			4	510.9	1400				
2		F7	1	510.9	400	0	0	Nessuno	
			2	582	400				
			3	582	600				
			4	509.5	600				
2		F7	1	509.5	800	0	0	Nessuno	
			2	582	800				
			3	582	1000				
			4	510.9	1000				
2		F7	1	510.9	0	0	0	Nessuno	
			2	582	0				
			3	582	200				
			4	509.5	200				
2		F7	1	510.9	1800	0	0	Nessuno	
			2	582	1800				
			3	582	2000				
			4	509.5	2000				
2		F7	1	510.9	200	0	0	Nessuno	
			2	582	200				
			3	582	400				
			4	509.5	400				
2		F7	1	509.5	600	0	0	Nessuno	
			2	582	600				
			3	582	800				
			4	510.9	800				
2		F7	1	510.9	1400	0	0	Nessuno	
			2	582	1400				
			3	582	1600				
			4	509.5	1600				
5		F7	1	509.5	1000	0	0	Nessuno	
			2	582	1000				
			3	582	1200				
			4	510.9	1200				
2		F7	1	510.9	1600	0	0	Nessuno	
			2	582	1600				
			3	582	1800				
			4	509.5	1800				
4		F8	1	340	1200	0	0	Nessuno	
			2	509.5	1200				
			3	509.5	1400				
			4	340	1400				
4		F8	1	340	1000	0	0	Nessuno	
			2	509.5	1000				
			3	509.5	1200				
			4	340	1200				
1		F8	1	340	0	0	0	Nessuno	

Carico	Solaio	Falda	Punti			Estr.	Angolo	Comp.	Fori
			Indice	X	Y				
			2	509.5	0				
			3	509.5	200				
			4	340	200				
6		F8	1	340	800	0	0	Nessuno	
			2	509.5	800				
			3	509.5	1000				
			4	340	1000				
2		F8	1	340	200	0	0	Nessuno	
			2	509.5	200				
			3	509.5	400				
			4	340	400				
1		F8	1	340	200	0	0	Nessuno	
			2	509.5	200				
			3	509.5	400				
			4	340	400				
5		F8	1	340	1200	0	0	Nessuno	
			2	509.5	1200				
			3	509.5	1400				
			4	341.4	1400				
2		F8	1	338.6	1800	0	0	Nessuno	
			2	508.1	1800				
			3	508.1	2000				
			4	338.6	2000				
2		F8	1	338.6	1600	0	0	Nessuno	
			2	508.1	1600				
			3	508.1	1800				
			4	338.6	1800				
2		F8	1	340	400	0	0	Nessuno	
			2	509.5	400				
			3	509.5	600				
			4	340	600				
2		F8	1	340	800	0	0	Nessuno	
			2	509.5	800				
			3	509.5	1000				
			4	341.4	1000				
3		F8	1	340	1800	0	0	Nessuno	
			2	509.5	1800				
			3	509.5	2000				
			4	340	2000				
2		F8	1	340	0	0	0	Nessuno	
			2	509.5	0				
			3	509.5	200				
			4	340	200				
5		F8	1	340	1000	0	0	Nessuno	
			2	509.5	1000				
			3	509.5	1200				
			4	341.4	1200				
3		F8	1	340	1400	0	0	Nessuno	
			2	509.5	1400				
			3	509.5	1600				
			4	340	1600				
3		F8	1	340	1600	0	0	Nessuno	
			2	509.5	1600				
			3	509.5	1800				
			4	340	1800				
2		F8	1	338.6	1400	0	0	Nessuno	
			2	508.1	1400				
			3	508.1	1600				
			4	338.6	1600				
6		F8	1	340	600	0	0	Nessuno	
			2	509.5	600				
			3	509.5	800				
			4	340	800				

6.5.4 Vincoli

6.5.4.1 Vincoli di piano

***Livello**: quota di inserimento espressa con notazione breve esprimibile come livello, falda, piano orizzontale alla Z specificata. [cm]*
***Punto**: punto di inserimento.*
***X**: coordinata X. [cm]*
***Y**: coordinata Y. [cm]*
***Estr.**: distanza dalla quota di inserimento misurata in direzione ortogonale al piano della quota e con verso positivo verso l'alto. [cm]*
***Ux**: limitazione al GDL oppure rigidezza della molla elastica-lineare. [daN/cm]*
***Uy**: limitazione al GDL oppure rigidezza della molla elastica-lineare. [daN/cm]*
***Uz**: limitazione al GDL oppure rigidezza della molla elastica-lineare. [daN/cm]*
***Rx**: limitazione al GDL oppure rigidezza della molla elastica-lineare. [daN*cm/deg]*
***Ry**: limitazione al GDL oppure rigidezza della molla elastica-lineare. [daN*cm/deg]*
***Rz**: limitazione al GDL oppure rigidezza della molla elastica-lineare. [daN*cm/deg]*

Livello	Punto		Estr.	Ux	Uy	Uz	Rx	Ry	Rz
	X	Y							
L1	680	0	0	Bloccato	Bloccato	Bloccato	Libero	Libero	Libero
L1	0	1600	0	Bloccato	Bloccato	Bloccato	Libero	Libero	Libero
L1	0	1400	0	Bloccato	Bloccato	Bloccato	Libero	Libero	Libero
L1	0	1000	0	Bloccato	Bloccato	Bloccato	Libero	Libero	Libero
L1	0	1200	0	Bloccato	Bloccato	Bloccato	Libero	Libero	Libero

Livello	Punto		Estr.	Ux	Uy	Uz	Rx	Ry	Rz
	X	Y							
L1	0	800	0	Bloccato	Bloccato	Bloccato	Libero	Libero	Libero
L1	0	600	0	Bloccato	Bloccato	Bloccato	Libero	Libero	Libero
L1	0	400	0	Bloccato	Bloccato	Bloccato	Libero	Libero	Libero
L1	0	200	0	Bloccato	Bloccato	Bloccato	Libero	Libero	Libero
L1	0	0	0	Bloccato	Bloccato	Bloccato	Libero	Libero	Libero
L1	680	2000	0	Bloccato	Bloccato	Bloccato	Libero	Libero	Libero
L1	680	1800	0	Bloccato	Bloccato	Bloccato	Libero	Libero	Libero
L1	680	1600	0	Bloccato	Bloccato	Bloccato	Libero	Libero	Libero
L1	680	1400	0	Bloccato	Bloccato	Bloccato	Libero	Libero	Libero
L1	680	1000	0	Bloccato	Bloccato	Bloccato	Libero	Libero	Libero
L1	680	1200	0	Bloccato	Bloccato	Bloccato	Libero	Libero	Libero
L1	680	800	0	Bloccato	Bloccato	Bloccato	Libero	Libero	Libero
L1	680	600	0	Bloccato	Bloccato	Bloccato	Libero	Libero	Libero
L1	680	400	0	Bloccato	Bloccato	Bloccato	Libero	Libero	Libero
L1	680	200	0	Bloccato	Bloccato	Bloccato	Libero	Libero	Libero
L1	0	1800	0	Bloccato	Bloccato	Bloccato	Libero	Libero	Libero
L1	0	2000	0	Bloccato	Bloccato	Bloccato	Libero	Libero	Libero

7 DATI DI MODELLAZIONE

7.1 NODI

7.1.1 Nodi di definizione

***Indice**: numero dell'elemento nell'insieme che lo contiene.*
***Posizione**: coordinate del nodo.*
***X**: coordinata X. [cm]*
***Y**: coordinata Y. [cm]*
***Z**: coordinata Z. [cm]*

Indice	Posizione			Indice	Posizione			Indice	Posizione			Indice	Posizione		
	X	Y	Z		X	Y	Z		X	Y	Z		X	Y	Z
2	0	0	-12	3	680	0	-12	4	0	200	-12	5	680	200	-12
6	0	400	-12	7	680	400	-12	8	0	600	-12	9	680	600	-12
10	0	800	-12	11	680	800	-12	12	0	1000	-12	13	680	1000	-12
14	0	1200	-12	15	680	1200	-12	16	0	1400	-12	17	680	1400	-12
18	0	1600	-12	19	680	1600	-12	20	0	1800	-12	21	680	1800	-12
22	0	2000	-12	23	680	2000	-12	24	42.5	0	88	25	190.5	0	88
26	489.5	0	88	27	637.5	0	88	28	42.5	100	88	29	42.5	200	88
30	190.5	200	88	31	489.5	200	88	32	637.5	200	88	33	42.5	400	88
34	190.5	400	88	35	489.5	400	88	36	637.5	400	88	37	42.5	600	88
38	170.5	600	88	39	509.5	600	88	40	637.5	600	88	41	42.5	800	88
42	170.5	800	88	43	509.5	800	88	44	637.5	800	88	45	42.5	1000	88
46	170.5	1000	88	47	509.5	1000	88	48	637.5	1000	88	49	42.5	1200	88
50	170.5	1200	88	51	509.5	1200	88	52	637.5	1200	88	53	42.5	1400	88
54	170.5	1400	88	55	509.5	1400	88	56	637.5	1400	88	57	42.5	1600	88
58	190.5	1600	88	59	489.5	1600	88	60	637.5	1600	88	61	42.5	1800	88
62	190.5	1800	88	63	489.5	1800	88	64	637.5	1800	88	65	42.5	2000	88
66	190.5	2000	88	67	489.5	2000	88	68	637.5	2000	88	69	98	0	138
70	582	0	138	71	98	200	138	72	582	200	138	73	98	400	138
74	582	400	138	75	98	600	138	76	582	600	138	77	98	800	138
78	582	800	138	79	98	1000	138	80	582	1000	138	81	98	1200	138
82	582	1200	138	83	98	1400	138	84	582	1400	138	85	98	1600	138
86	582	1600	138	87	98	1800	138	88	582	1800	138	89	98	2000	138
90	582	2000	138	91	170.5	0	168	92	509.5	0	168	93	170.5	200	168
94	509.5	200	168	95	170.5	400	168	96	509.5	400	168	97	170.5	600	168
98	509.5	600	168	99	170.5	800	168	100	509.5	800	168	101	170.5	1000	168
102	509.5	1000	168	103	170.5	1200	168	104	509.5	1200	168	105	170.5	1400	168
106	509.5	1400	168	107	170.5	1600	168	108	509.5	1600	168	109	170.5	1800	168
110	509.5	1800	168	111	170.5	2000	168	112	509.5	2000	168	113	340	0	188
114	340	200	188	115	340	400	188	116	340	600	188	117	340	800	188
118	340	1000	188	119	340	1200	188	120	340	1400	188	121	340	1600	188
122	340	1800	188	123	340	2000	188								

7.2 CARICHI CONCENTRATI

***Indice**: numero dell'elemento nell'insieme che lo contiene.*
***Nodo**: nodo su cui agisce il carico.*
***Condizione**: condizione elementare mappata nella quale agisce il carico.*
***Fx**: componente della forza lungo l'asse X. [daN]*
***Fy**: componente della forza lungo l'asse Y. [daN]*
***Fz**: componente della forza lungo l'asse Z. [daN]*
***Mx**: componente del momento attorno all'asse X. [daN*cm]*

***My**: componente del momento attorno all'asse Y. [daN*cm]*
***Mz**: componente del momento attorno all'asse Z. [daN*cm]*

Indice	Nodo	Condizione	Fx	Fy	Fz	Mx	My	Mz	Indice	Nodo	Condizione	Fx	Fy	Fz	Mx	My	Mz

7.3 CARICHI CONCENTRATI SISMICI

***Indice**: numero dell'elemento nell'insieme che lo contiene.*
***Nodo**: nodo su cui agisce il carico.*
***Condizione**: condizione elementare mappata nella quale agisce il carico.*
***Fx**: componente della forza lungo l'asse X. [daN]*
***Fy**: componente della forza lungo l'asse Y. [daN]*
***Fz**: componente della forza lungo l'asse Z. [daN]*
***Mz**: componente del momento attorno all'asse Z. [daN*cm]*
***Peso**: peso sismico. [daN]*
***γ**: coefficiente γ. Il valore è adimensionale.*

Indice	Nodo	Condizione	Fx	Fy	Fz	Mz	Peso	γ	Indice	Nodo	Condizione	Fx	Fy	Fz	Mz	Peso	γ
1	24	Sisma X SLV	586.4	0	0	0	5.4E3	0.651	2	24	Sisma Y SLV	0	107.7	0	0	5.4E3	0.651
3	24	Sisma X SLO	319.9	0	0	0	5.4E3	0.651	4	24	Sisma Y SLO	0	44.2	0	0	5.4E3	0.651
5	24	Sisma X SLD	262.5	0	0	0	5.4E3	0.651	6	24	Sisma Y SLD	0	40.8	0	0	5.4E3	0.651
7	25	Sisma X SLV	12.7	0	0	0	1.2E2	0.651	8	25	Sisma Y SLV	0	2.3	0	0	1.2E2	0.651
9	25	Sisma X SLO	6.9	0	0	0	1.2E2	0.651	10	25	Sisma Y SLO	0	1	0	0	1.2E2	0.651
11	25	Sisma X SLD	5.7	0	0	0	1.2E2	0.651	12	25	Sisma Y SLD	0	0.9	0	0	1.2E2	0.651
13	26	Sisma X SLV	12.7	0	0	0	1.2E2	0.651	14	26	Sisma Y SLV	0	2.3	0	0	1.2E2	0.651
15	26	Sisma X SLO	6.9	0	0	0	1.2E2	0.651	16	26	Sisma Y SLO	0	1	0	0	1.2E2	0.651
17	26	Sisma X SLD	5.7	0	0	0	1.2E2	0.651	18	26	Sisma Y SLD	0	0.9	0	0	1.2E2	0.651
19	27	Sisma X SLV	588.1	0	0	0	5.4E3	0.651	20	27	Sisma Y SLV	0	108	0	0	5.4E3	0.651
21	27	Sisma X SLO	320.8	0	0	0	5.4E3	0.651	22	27	Sisma Y SLO	0	44.3	0	0	5.4E3	0.651
23	27	Sisma X SLD	263.2	0	0	0	5.4E3	0.651	24	27	Sisma Y SLD	0	40.9	0	0	5.4E3	0.651
25	28	Sisma X SLV	3.3	0	0	0	3.0E1	0.651	26	28	Sisma Y SLV	0	0.6	0	0	3.0E1	0.651
27	28	Sisma X SLO	1.8	0	0	0	3.0E1	0.651	28	28	Sisma Y SLO	0	0.2	0	0	3.0E1	0.651
29	28	Sisma X SLD	1.5	0	0	0	3.0E1	0.651	30	28	Sisma Y SLD	0	0.2	0	0	3.0E1	0.651
31	29	Sisma X SLV	592.8	0	0	0	5.5E3	0.651	32	29	Sisma Y SLV	0	108.8	0	0	5.5E3	0.651
33	29	Sisma X SLO	323.4	0	0	0	5.5E3	0.651	34	29	Sisma Y SLO	0	44.6	0	0	5.5E3	0.651
35	29	Sisma X SLD	265.4	0	0	0	5.5E3	0.651	36	29	Sisma Y SLD	0	41.2	0	0	5.5E3	0.651
37	30	Sisma X SLV	12.7	0	0	0	1.2E2	0.651	38	30	Sisma Y SLV	0	2.3	0	0	1.2E2	0.651
39	30	Sisma X SLO	6.9	0	0	0	1.2E2	0.651	40	30	Sisma Y SLO	0	1	0	0	1.2E2	0.651
41	30	Sisma X SLD	5.7	0	0	0	1.2E2	0.651	42	30	Sisma Y SLD	0	0.9	0	0	1.2E2	0.651
43	31	Sisma X SLV	12.7	0	0	0	1.2E2	0.651	44	31	Sisma Y SLV	0	2.3	0	0	1.2E2	0.651
45	31	Sisma X SLO	6.9	0	0	0	1.2E2	0.651	46	31	Sisma Y SLO	0	1	0	0	1.2E2	0.651
47	31	Sisma X SLD	5.7	0	0	0	1.2E2	0.651	48	31	Sisma Y SLD	0	0.9	0	0	1.2E2	0.651
49	32	Sisma X SLV	594.5	0	0	0	5.5E3	0.651	50	32	Sisma Y SLV	0	109.1	0	0	5.5E3	0.651
51	32	Sisma X SLO	324.3	0	0	0	5.5E3	0.651	52	32	Sisma Y SLO	0	44.8	0	0	5.5E3	0.651
53	32	Sisma X SLD	266.1	0	0	0	5.5E3	0.651	54	32	Sisma Y SLD	0	41.4	0	0	5.5E3	0.651
55	33	Sisma X SLV	594.5	0	0	0	5.5E3	0.651	56	33	Sisma Y SLV	0	109.1	0	0	5.5E3	0.651
57	33	Sisma X SLO	324.3	0	0	0	5.5E3	0.651	58	33	Sisma Y SLO	0	44.8	0	0	5.5E3	0.651
59	33	Sisma X SLD	266.1	0	0	0	5.5E3	0.651	60	33	Sisma Y SLD	0	41.4	0	0	5.5E3	0.651
61	34	Sisma X SLV	12.7	0	0	0	1.2E2	0.651	62	34	Sisma Y SLV	0	2.3	0	0	1.2E2	0.651
63	34	Sisma X SLO	6.9	0	0	0	1.2E2	0.651	64	34	Sisma Y SLO	0	1	0	0	1.2E2	0.651
65	34	Sisma X SLD	5.7	0	0	0	1.2E2	0.651	66	34	Sisma Y SLD	0	0.9	0	0	1.2E2	0.651
67	35	Sisma X SLV	12.7	0	0	0	1.2E2	0.651	68	35	Sisma Y SLV	0	2.3	0	0	1.2E2	0.651
69	35	Sisma X SLO	6.9	0	0	0	1.2E2	0.651	70	35	Sisma Y SLO	0	1	0	0	1.2E2	0.651
71	35	Sisma X SLD	5.7	0	0	0	1.2E2	0.651	72	35	Sisma Y SLD	0	0.9	0	0	1.2E2	0.651
73	36	Sisma X SLV	594.5	0	0	0	5.5E3	0.651	74	36	Sisma Y SLV	0	109.1	0	0	5.5E3	0.651
75	36	Sisma X SLO	324.3	0	0	0	5.5E3	0.651	76	36	Sisma Y SLO	0	44.8	0	0	5.5E3	0.651
77	36	Sisma X SLD	266.1	0	0	0	5.5E3	0.651	78	36	Sisma Y SLD	0	41.4	0	0	5.5E3	0.651
79	37	Sisma X SLV	598.8	0	0	0	5.5E3	0.651	80	37	Sisma Y SLV	0	109.9	0	0	5.5E3	0.651
81	37	Sisma X SLO	326.7	0	0	0	5.5E3	0.651	82	37	Sisma Y SLO	0	45.1	0	0	5.5E3	0.651
83	37	Sisma X SLD	268	0	0	0	5.5E3	0.651	84	37	Sisma Y SLD	0	41.7	0	0	5.5E3	0.651
85	38	Sisma X SLV	15.7	0	0	0	1.4E2	0.651	86	38	Sisma Y SLV	0	2.9	0	0	1.4E2	0.651
87	38	Sisma X SLO	8.6	0	0	0	1.4E2	0.651	88	38	Sisma Y SLO	0	1.2	0	0	1.4E2	0.651
89	38	Sisma X SLD	7	0	0	0	1.4E2	0.651	90	38	Sisma Y SLD	0	1.1	0	0	1.4E2	0.651
91	39	Sisma X SLV	15.7	0	0	0	1.4E2	0.651	92	39	Sisma Y SLV	0	2.9	0	0	1.4E2	0.651
93	39	Sisma X SLO	8.6	0	0	0	1.4E2	0.651	94	39	Sisma Y SLO	0	1.2	0	0	1.4E2	0.651
95	39	Sisma X SLD	7	0	0	0	1.4E2	0.651	96	39	Sisma Y SLD	0	1.1	0	0	1.4E2	0.651
97	40	Sisma X SLV	598.8	0	0	0	5.5E3	0.651	98	40	Sisma Y SLV	0	109.9	0	0	5.5E3	0.651
99	40	Sisma X SLO	326.7	0	0	0	5.5E3	0.651	100	40	Sisma Y SLO	0	45.1	0	0	5.5E3	0.651
101	40	Sisma X SLD	268	0	0	0	5.5E3	0.651	102	40	Sisma Y SLD	0	41.7	0	0	5.5E3	0.651
103	41	Sisma X SLV	601	0	0	0	5.5E3	0.651	104	41	Sisma Y SLV	0	110.3	0	0	5.5E3	0.651
105	41	Sisma X SLO	327.9	0	0	0	5.5E3	0.651	106	41	Sisma Y SLO	0	45.3	0	0	5.5E3	0.651
107	41	Sisma X SLD	269	0	0	0	5.5E3	0.651	108	41	Sisma Y SLD	0	41.8	0	0	5.5E3	0.651
109	42	Sisma X SLV	15.7	0	0	0	1.4E2	0.651	110	42	Sisma Y SLV	0	2.9	0	0	1.4E2	0.651
111	42	Sisma X SLO	8.6	0	0	0	1.4E2	0.651	112	42	Sisma Y SLO	0	1.2	0	0	1.4E2	0.651
113	42	Sisma X SLD	7	0	0	0	1.4E2	0.651	114	42	Sisma Y SLD	0	1.1	0	0	1.4E2	0.651
115	43	Sisma X SLV	15.7	0	0	0	1.4E2	0.651	116	43	Sisma Y SLV	0	2.9	0	0	1.4E2	0.651
117	43	Sisma X SLO	8.6	0	0	0	1.4E2	0.651	118	43	Sisma Y SLO	0	1.2	0	0	1.4E2	0.651
119	43	Sisma X SLD	7	0	0	0	1.4E2	0.651	120	43	Sisma Y SLD	0	1.1	0	0	1.4E2	0.651
121	44	Sisma X SLV	601	0	0	0	5.5E3	0.651	122	44	Sisma Y SLV	0	110.3	0	0	5.5E3	0.651
123	44	Sisma X SLO	327.9	0	0	0	5.5E3	0.651	124	44	Sisma Y SLO	0	45.3	0	0	5.5E3	0.651
125	44	Sisma X SLD	269	0	0	0	5.5E3	0.651	126	44	Sisma Y SLD	0	41.8	0	0	5.5E3	0.651
127	45	Sisma X SLV	601	0	0	0	5.5E3	0.651	128	45	Sisma Y SLV	0	110.3	0	0	5.5E3	0.651
129	45	Sisma X SLO	327.9	0	0	0	5.5E3	0.651	130	45	Sisma Y SLO	0	45.3	0	0	5.5E3	0.651
131	45	Sisma X SLD	269	0	0	0	5.5E3	0.651	132	45	Sisma Y SLD	0	41.8	0	0	5.5E3	0.651
133	46	Sisma X SLV	15.7	0	0	0	1.4E2	0.651	134	46	Sisma Y SLV	0	2.9	0	0	1.4E2	0.651

Indice	Nodo	Condizione	Fx	Fy	Fz	Mz	Peso	γ	Indice	Nodo	Condizione	Fx	Fy	Fz	Mz	Peso	γ
135	46	Sisma X SLO	8.6	0	0	0	1.4E2	0.651	136	46	Sisma Y SLO	0	1.2	0	0	1.4E2	0.651
137	46	Sisma X SLD	7	0	0	0	1.4E2	0.651	138	46	Sisma Y SLD	0	1.1	0	0	1.4E2	0.651
139	47	Sisma X SLV	15.7	0	0	0	1.4E2	0.651	140	47	Sisma Y SLV	0	2.9	0	0	1.4E2	0.651
141	47	Sisma X SLO	8.6	0	0	0	1.4E2	0.651	142	47	Sisma Y SLO	0	1.2	0	0	1.4E2	0.651
143	47	Sisma X SLD	7	0	0	0	1.4E2	0.651	144	47	Sisma Y SLD	0	1.1	0	0	1.4E2	0.651
145	48	Sisma X SLV	601	0	0	0	5.5E3	0.651	146	48	Sisma Y SLV	0	110.3	0	0	5.5E3	0.651
147	48	Sisma X SLO	327.9	0	0	0	5.5E3	0.651	148	48	Sisma Y SLO	0	45.3	0	0	5.5E3	0.651
149	48	Sisma X SLD	269	0	0	0	5.5E3	0.651	150	48	Sisma Y SLD	0	41.8	0	0	5.5E3	0.651
151	49	Sisma X SLV	601	0	0	0	5.5E3	0.651	152	49	Sisma Y SLV	0	110.3	0	0	5.5E3	0.651
153	49	Sisma X SLO	327.9	0	0	0	5.5E3	0.651	154	49	Sisma Y SLO	0	45.3	0	0	5.5E3	0.651
155	49	Sisma X SLD	269	0	0	0	5.5E3	0.651	156	49	Sisma Y SLD	0	41.8	0	0	5.5E3	0.651
157	50	Sisma X SLV	15.7	0	0	0	1.4E2	0.651	158	50	Sisma Y SLV	0	2.9	0	0	1.4E2	0.651
159	50	Sisma X SLO	8.6	0	0	0	1.4E2	0.651	160	50	Sisma Y SLO	0	1.2	0	0	1.4E2	0.651
161	50	Sisma X SLD	7	0	0	0	1.4E2	0.651	162	50	Sisma Y SLD	0	1.1	0	0	1.4E2	0.651
163	51	Sisma X SLV	15.7	0	0	0	1.4E2	0.651	164	51	Sisma Y SLV	0	2.9	0	0	1.4E2	0.651
165	51	Sisma X SLO	8.6	0	0	0	1.4E2	0.651	166	51	Sisma Y SLO	0	1.2	0	0	1.4E2	0.651
167	51	Sisma X SLD	7	0	0	0	1.4E2	0.651	168	51	Sisma Y SLD	0	1.1	0	0	1.4E2	0.651
169	52	Sisma X SLV	601	0	0	0	5.5E3	0.651	170	52	Sisma Y SLV	0	110.3	0	0	5.5E3	0.651
171	52	Sisma X SLO	327.9	0	0	0	5.5E3	0.651	172	52	Sisma Y SLO	0	45.3	0	0	5.5E3	0.651
173	52	Sisma X SLD	269	0	0	0	5.5E3	0.651	174	52	Sisma Y SLD	0	41.8	0	0	5.5E3	0.651
175	53	Sisma X SLV	598.8	0	0	0	5.5E3	0.651	176	53	Sisma Y SLV	0	109.9	0	0	5.5E3	0.651
177	53	Sisma X SLO	326.7	0	0	0	5.5E3	0.651	178	53	Sisma Y SLO	0	45.1	0	0	5.5E3	0.651
179	53	Sisma X SLD	268	0	0	0	5.5E3	0.651	180	53	Sisma Y SLD	0	41.7	0	0	5.5E3	0.651
181	54	Sisma X SLV	15.7	0	0	0	1.4E2	0.651	182	54	Sisma Y SLV	0	2.9	0	0	1.4E2	0.651
183	54	Sisma X SLO	8.6	0	0	0	1.4E2	0.651	184	54	Sisma Y SLO	0	1.2	0	0	1.4E2	0.651
185	54	Sisma X SLD	7	0	0	0	1.4E2	0.651	186	54	Sisma Y SLD	0	1.1	0	0	1.4E2	0.651
187	55	Sisma X SLV	15.7	0	0	0	1.4E2	0.651	188	55	Sisma Y SLV	0	2.9	0	0	1.4E2	0.651
189	55	Sisma X SLO	8.6	0	0	0	1.4E2	0.651	190	55	Sisma Y SLO	0	1.2	0	0	1.4E2	0.651
191	55	Sisma X SLD	7	0	0	0	1.4E2	0.651	192	55	Sisma Y SLD	0	1.1	0	0	1.4E2	0.651
193	56	Sisma X SLV	598.8	0	0	0	5.5E3	0.651	194	56	Sisma Y SLV	0	109.9	0	0	5.5E3	0.651
195	56	Sisma X SLO	326.7	0	0	0	5.5E3	0.651	196	56	Sisma Y SLO	0	45.1	0	0	5.5E3	0.651
197	56	Sisma X SLD	268	0	0	0	5.5E3	0.651	198	56	Sisma Y SLD	0	41.7	0	0	5.5E3	0.651
199	57	Sisma X SLV	594.5	0	0	0	5.5E3	0.651	200	57	Sisma Y SLV	0	109.1	0	0	5.5E3	0.651
201	57	Sisma X SLO	324.3	0	0	0	5.5E3	0.651	202	57	Sisma Y SLO	0	44.8	0	0	5.5E3	0.651
203	57	Sisma X SLD	266.1	0	0	0	5.5E3	0.651	204	57	Sisma Y SLD	0	41.4	0	0	5.5E3	0.651
205	58	Sisma X SLV	12.7	0	0	0	1.2E2	0.651	206	58	Sisma Y SLV	0	2.3	0	0	1.2E2	0.651
207	58	Sisma X SLO	6.9	0	0	0	1.2E2	0.651	208	58	Sisma Y SLO	0	1	0	0	1.2E2	0.651
209	58	Sisma X SLD	5.7	0	0	0	1.2E2	0.651	210	58	Sisma Y SLD	0	0.9	0	0	1.2E2	0.651
211	59	Sisma X SLV	12.7	0	0	0	1.2E2	0.651	212	59	Sisma Y SLV	0	2.3	0	0	1.2E2	0.651
213	59	Sisma X SLO	6.9	0	0	0	1.2E2	0.651	214	59	Sisma Y SLO	0	1	0	0	1.2E2	0.651
215	59	Sisma X SLD	5.7	0	0	0	1.2E2	0.651	216	59	Sisma Y SLD	0	0.9	0	0	1.2E2	0.651
217	60	Sisma X SLV	594.5	0	0	0	5.5E3	0.651	218	60	Sisma Y SLV	0	109.1	0	0	5.5E3	0.651
219	60	Sisma X SLO	324.3	0	0	0	5.5E3	0.651	220	60	Sisma Y SLO	0	44.8	0	0	5.5E3	0.651
221	60	Sisma X SLD	266.1	0	0	0	5.5E3	0.651	222	60	Sisma Y SLD	0	41.4	0	0	5.5E3	0.651
223	61	Sisma X SLV	594.5	0	0	0	5.5E3	0.651	224	61	Sisma Y SLV	0	109.1	0	0	5.5E3	0.651
225	61	Sisma X SLO	324.3	0	0	0	5.5E3	0.651	226	61	Sisma Y SLO	0	44.8	0	0	5.5E3	0.651
227	61	Sisma X SLD	266.1	0	0	0	5.5E3	0.651	228	61	Sisma Y SLD	0	41.4	0	0	5.5E3	0.651
229	62	Sisma X SLV	12.7	0	0	0	1.2E2	0.651	230	62	Sisma Y SLV	0	2.3	0	0	1.2E2	0.651
231	62	Sisma X SLO	6.9	0	0	0	1.2E2	0.651	232	62	Sisma Y SLO	0	1	0	0	1.2E2	0.651
233	62	Sisma X SLD	5.7	0	0	0	1.2E2	0.651	234	62	Sisma Y SLD	0	0.9	0	0	1.2E2	0.651
235	63	Sisma X SLV	12.7	0	0	0	1.2E2	0.651	236	63	Sisma Y SLV	0	2.3	0	0	1.2E2	0.651
237	63	Sisma X SLO	6.9	0	0	0	1.2E2	0.651	238	63	Sisma Y SLO	0	1	0	0	1.2E2	0.651
239	63	Sisma X SLD	5.7	0	0	0	1.2E2	0.651	240	63	Sisma Y SLD	0	0.9	0	0	1.2E2	0.651
241	64	Sisma X SLV	594.5	0	0	0	5.5E3	0.651	242	64	Sisma Y SLV	0	109.1	0	0	5.5E3	0.651
243	64	Sisma X SLO	324.3	0	0	0	5.5E3	0.651	244	64	Sisma Y SLO	0	44.8	0	0	5.5E3	0.651
245	64	Sisma X SLD	266.1	0	0	0	5.5E3	0.651	246	64	Sisma Y SLD	0	41.4	0	0	5.5E3	0.651
247	65	Sisma X SLV	588.1	0	0	0	5.4E3	0.651	248	65	Sisma Y SLV	0	108	0	0	5.4E3	0.651
249	65	Sisma X SLO	320.8	0	0	0	5.4E3	0.651	250	65	Sisma Y SLO	0	44.3	0	0	5.4E3	0.651
251	65	Sisma X SLD	263.2	0	0	0	5.4E3	0.651	252	65	Sisma Y SLD	0	40.9	0	0	5.4E3	0.651
253	66	Sisma X SLV	12.7	0	0	0	1.2E2	0.651	254	66	Sisma Y SLV	0	2.3	0	0	1.2E2	0.651
255	66	Sisma X SLO	6.9	0	0	0	1.2E2	0.651	256	66	Sisma Y SLO	0	1	0	0	1.2E2	0.651
257	66	Sisma X SLD	5.7	0	0	0	1.2E2	0.651	258	66	Sisma Y SLD	0	0.9	0	0	1.2E2	0.651
259	67	Sisma X SLV	12.7	0	0	0	1.2E2	0.651	260	67	Sisma Y SLV	0	2.3	0	0	1.2E2	0.651
261	67	Sisma X SLO	6.9	0	0	0	1.2E2	0.651	262	67	Sisma Y SLO	0	1	0	0	1.2E2	0.651
263	67	Sisma X SLD	5.7	0	0	0	1.2E2	0.651	264	67	Sisma Y SLD	0	0.9	0	0	1.2E2	0.651
265	68	Sisma X SLV	588.1	0	0	0	5.4E3	0.651	266	68	Sisma Y SLV	0	108	0	0	5.4E3	0.651
267	68	Sisma X SLO	320.8	0	0	0	5.4E3	0.651	268	68	Sisma Y SLO	0	44.3	0	0	5.4E3	0.651
269	68	Sisma X SLD	263.2	0	0	0	5.4E3	0.651	270	68	Sisma Y SLD	0	40.9	0	0	5.4E3	0.651
271	69	Sisma X SLV	574.4	0	0	0	3.4E3	1.021	272	69	Sisma Y SLV	0	105.5	0	0	3.4E3	1.021
273	69	Sisma X SLO	313.4	0	0	0	3.4E3	1.021	274	69	Sisma Y SLO	0	43.3	0	0	3.4E3	1.021
275	69	Sisma X SLD	257.1	0	0	0	3.4E3	1.021	276	69	Sisma Y SLD	0	40	0	0	3.4E3	1.021
277	70	Sisma X SLV	574.4	0	0	0	3.4E3	1.021	278	70	Sisma Y SLV	0	105.5	0	0	3.4E3	1.021
279	70	Sisma X SLO	313.4	0	0	0	3.4E3	1.021	280	70	Sisma Y SLO	0	43.3	0	0	3.4E3	1.021
281	70	Sisma X SLD	257.1	0	0	0	3.4E3	1.021	282	70	Sisma Y SLD	0	40	0	0	3.4E3	1.021
283	71	Sisma X SLV	579.6	0	0	0	3.4E3	1.021	284	71	Sisma Y SLV	0	106.4	0	0	3.4E3	1.021
285	71	Sisma X SLO	316.2	0	0	0	3.4E3	1.021	286	71	Sisma Y SLO	0	43.6	0	0	3.4E3	1.021
287	71	Sisma X SLD	259.5	0	0	0	3.4E3	1.021	288	71	Sisma Y SLD	0	40.3	0	0	3.4E3	1.021
289	72	Sisma X SLV	579.6	0	0	0	3.4E3	1.021	290	72	Sisma Y SLV	0	106.4	0	0	3.4E3	1.021
291	72	Sisma X SLO	316.2	0	0	0	3.4E3	1.021	292	72	Sisma Y SLO	0	43.6	0	0	3.4E3	1.021
293	72	Sisma X SLD	259.5	0	0	0	3.4E3	1.021	294	72	Sisma Y SLD	0	40.3	0	0	3.4E3	1.021
295	73	Sisma X SLV	579.6	0	0	0	3.4E3	1.021	296	73	Sisma Y SLV	0	106.4	0	0	3.4E3	1.021
297	73	Sisma X SLO	316.2	0	0	0	3.4E3	1.021	298	73	Sisma Y SLO	0	43.6	0	0	3.4E3	1.021
299	73	Sisma X SLD	259.5	0	0	0	3.4E3	1.021	300	73	Sisma Y SLD	0	40.3	0	0	3.4E3	1.021
301	74	Sisma X SLV	579.6	0	0	0	3.4E3	1.021	302	74	Sisma Y SLV	0	106.4	0	0	3.4E3	1.021
303	74	Sisma X SLO	316.2	0	0	0	3.4E3	1.021	304	74	Sisma Y SLO	0	43.6	0	0	3.4E3	1.021
305	74	Sisma X SLD	259.5	0	0	0	3.4E3	1.021	306	74	Sisma Y SLD	0	40.3	0	0	3.4E3	1.021
307	75	Sisma X SLV	585.9	0	0	0	3.4E3	1.021	308	75	Sisma Y SLV	0	107.6	0	0	3.4E3	1.021
309	75	Sisma X SLO	319.6	0	0	0	3.4E3	1.021	310	75	Sisma Y SLO	0	44.1	0	0	3.4E3	1.021
311	75	Sisma X SLD	262.2	0	0	0	3.4E3	1.021	312	75	Sisma Y SLD	0	40.8	0	0	3.4E3	1.021
313	76	Sisma X SLV	585.9	0	0	0	3.4E3	1.021	314	76	Sisma Y SLV	0	107.6	0	0	3.4E3	1.021
315	76	Sisma X SLO	319.6	0	0	0	3.4E3	1.021	316	76	Sisma Y SLO	0	44.1	0	0	3.4E3	1.021
317	76	Sisma X SLD	262.2	0	0	0	3.4E3	1.021	318	76	Sisma Y SLD	0	40.8	0	0	3.4E3	1.021
319	77	Sisma X SLV	589.3	0	0	0	3.5E3	1.021	320	77	Sisma Y SLV	0	108.2	0	0	3.5E3	1.021
321	77	Sisma X SLO	321.5	0	0	0	3.5E3	1.021	322	77	Sisma Y SLO	0	44.4	0	0	3.5E3	1.021
323	77	Sisma X SLD	263.8	0	0	0	3.5E3	1.021	324	77	Sisma Y SLD	0	41	0	0	3.5E3	1.021

Indice	Nodo	Condizione	Fx	Fy	Fz	Mz	Peso	γ
325	78	Sisma X SLV	589.3	0	0	0	3.5E3	1.021
327	78	Sisma X SLO	321.5	0	0	0	3.5E3	1.021
329	78	Sisma X SLD	263.8	0	0	0	3.5E3	1.021
331	79	Sisma X SLV	589.3	0	0	0	3.5E3	1.021
333	79	Sisma X SLO	321.5	0	0	0	3.5E3	1.021
335	79	Sisma X SLD	263.8	0	0	0	3.5E3	1.021
337	80	Sisma X SLV	589.3	0	0	0	3.5E3	1.021
339	80	Sisma X SLO	321.5	0	0	0	3.5E3	1.021
341	80	Sisma X SLD	263.8	0	0	0	3.5E3	1.021
343	81	Sisma X SLV	589.3	0	0	0	3.5E3	1.021
345	81	Sisma X SLO	321.5	0	0	0	3.5E3	1.021
347	81	Sisma X SLD	263.8	0	0	0	3.5E3	1.021
349	82	Sisma X SLV	589.3	0	0	0	3.5E3	1.021
351	82	Sisma X SLO	321.5	0	0	0	3.5E3	1.021
353	82	Sisma X SLD	263.8	0	0	0	3.5E3	1.021
355	83	Sisma X SLV	585.9	0	0	0	3.4E3	1.021
357	83	Sisma X SLO	319.6	0	0	0	3.4E3	1.021
359	83	Sisma X SLD	262.2	0	0	0	3.4E3	1.021
361	84	Sisma X SLV	585.9	0	0	0	3.4E3	1.021
363	84	Sisma X SLO	319.6	0	0	0	3.4E3	1.021
365	84	Sisma X SLD	262.2	0	0	0	3.4E3	1.021
367	85	Sisma X SLV	579.6	0	0	0	3.4E3	1.021
369	85	Sisma X SLO	316.2	0	0	0	3.4E3	1.021
371	85	Sisma X SLD	259.5	0	0	0	3.4E3	1.021
373	86	Sisma X SLV	579.6	0	0	0	3.4E3	1.021
375	86	Sisma X SLO	316.2	0	0	0	3.4E3	1.021
377	86	Sisma X SLD	259.5	0	0	0	3.4E3	1.021
379	87	Sisma X SLV	579.6	0	0	0	3.4E3	1.021
381	87	Sisma X SLO	316.2	0	0	0	3.4E3	1.021
383	87	Sisma X SLD	259.5	0	0	0	3.4E3	1.021
385	88	Sisma X SLV	579.6	0	0	0	3.4E3	1.021
387	88	Sisma X SLO	316.2	0	0	0	3.4E3	1.021
389	88	Sisma X SLD	259.5	0	0	0	3.4E3	1.021
391	89	Sisma X SLV	574.4	0	0	0	3.4E3	1.021
393	89	Sisma X SLO	313.4	0	0	0	3.4E3	1.021
395	89	Sisma X SLD	257.1	0	0	0	3.4E3	1.021
397	90	Sisma X SLV	574.4	0	0	0	3.4E3	1.021
399	90	Sisma X SLO	313.4	0	0	0	3.4E3	1.021
401	90	Sisma X SLD	257.1	0	0	0	3.4E3	1.021
403	91	Sisma X SLV	755	0	0	0	3.6E3	1.243
405	91	Sisma X SLO	411.9	0	0	0	3.6E3	1.243
407	91	Sisma X SLD	338	0	0	0	3.6E3	1.243
409	92	Sisma X SLV	755	0	0	0	3.6E3	1.243
411	92	Sisma X SLO	411.9	0	0	0	3.6E3	1.243
413	92	Sisma X SLD	338	0	0	0	3.6E3	1.243
415	93	Sisma X SLV	761.4	0	0	0	3.7E3	1.243
417	93	Sisma X SLO	415.3	0	0	0	3.7E3	1.243
419	93	Sisma X SLD	340.8	0	0	0	3.7E3	1.243
421	94	Sisma X SLV	761.4	0	0	0	3.7E3	1.243
423	94	Sisma X SLO	415.3	0	0	0	3.7E3	1.243
425	94	Sisma X SLD	340.8	0	0	0	3.7E3	1.243
427	95	Sisma X SLV	761.4	0	0	0	3.7E3	1.243
429	95	Sisma X SLO	415.3	0	0	0	3.7E3	1.243
431	95	Sisma X SLD	340.8	0	0	0	3.7E3	1.243
433	96	Sisma X SLV	761.4	0	0	0	3.7E3	1.243
435	96	Sisma X SLO	415.3	0	0	0	3.7E3	1.243
437	96	Sisma X SLD	340.8	0	0	0	3.7E3	1.243
439	97	Sisma X SLV	772	0	0	0	3.7E3	1.243
441	97	Sisma X SLO	421.1	0	0	0	3.7E3	1.243
443	97	Sisma X SLD	345.5	0	0	0	3.7E3	1.243
445	98	Sisma X SLV	772	0	0	0	3.7E3	1.243
447	98	Sisma X SLO	421.1	0	0	0	3.7E3	1.243
449	98	Sisma X SLD	345.5	0	0	0	3.7E3	1.243
451	99	Sisma X SLV	776.1	0	0	0	3.7E3	1.243
453	99	Sisma X SLO	423.4	0	0	0	3.7E3	1.243
455	99	Sisma X SLD	347.4	0	0	0	3.7E3	1.243
457	100	Sisma X SLV	776.1	0	0	0	3.7E3	1.243
459	100	Sisma X SLO	423.4	0	0	0	3.7E3	1.243
461	100	Sisma X SLD	347.4	0	0	0	3.7E3	1.243
463	101	Sisma X SLV	776.1	0	0	0	3.7E3	1.243
465	101	Sisma X SLO	423.4	0	0	0	3.7E3	1.243
467	101	Sisma X SLD	347.4	0	0	0	3.7E3	1.243
469	102	Sisma X SLV	776.1	0	0	0	3.7E3	1.243
471	102	Sisma X SLO	423.4	0	0	0	3.7E3	1.243
473	102	Sisma X SLD	347.4	0	0	0	3.7E3	1.243
475	103	Sisma X SLV	776.1	0	0	0	3.7E3	1.243
477	103	Sisma X SLO	423.4	0	0	0	3.7E3	1.243
479	103	Sisma X SLD	347.4	0	0	0	3.7E3	1.243
481	104	Sisma X SLV	776.1	0	0	0	3.7E3	1.243
483	104	Sisma X SLO	423.4	0	0	0	3.7E3	1.243
485	104	Sisma X SLD	347.4	0	0	0	3.7E3	1.243
487	105	Sisma X SLV	772	0	0	0	3.7E3	1.243
489	105	Sisma X SLO	421.1	0	0	0	3.7E3	1.243
491	105	Sisma X SLD	345.5	0	0	0	3.7E3	1.243
493	106	Sisma X SLV	772	0	0	0	3.7E3	1.243
495	106	Sisma X SLO	421.1	0	0	0	3.7E3	1.243
497	106	Sisma X SLD	345.5	0	0	0	3.7E3	1.243
499	107	Sisma X SLV	761.4	0	0	0	3.7E3	1.243
501	107	Sisma X SLO	415.3	0	0	0	3.7E3	1.243
503	107	Sisma X SLD	340.8	0	0	0	3.7E3	1.243
505	108	Sisma X SLV	761.4	0	0	0	3.7E3	1.243
507	108	Sisma X SLO	415.3	0	0	0	3.7E3	1.243
509	108	Sisma X SLD	340.8	0	0	0	3.7E3	1.243
511	109	Sisma X SLV	761.4	0	0	0	3.7E3	1.243
513	109	Sisma X SLO	415.3	0	0	0	3.7E3	1.243

Indice	Nodo	Condizione	Fx	Fy	Fz	Mz	Peso	γ
326	78	Sisma Y SLV	0	108.2	0	0	3.5E3	1.021
328	78	Sisma Y SLO	0	44.4	0	0	3.5E3	1.021
330	78	Sisma Y SLD	0	41	0	0	3.5E3	1.021
332	79	Sisma Y SLV	0	108.2	0	0	3.5E3	1.021
334	79	Sisma Y SLO	0	44.4	0	0	3.5E3	1.021
336	79	Sisma Y SLD	0	41	0	0	3.5E3	1.021
338	80	Sisma Y SLV	0	108.2	0	0	3.5E3	1.021
340	80	Sisma Y SLO	0	44.4	0	0	3.5E3	1.021
342	80	Sisma Y SLD	0	41	0	0	3.5E3	1.021
344	81	Sisma Y SLV	0	108.2	0	0	3.5E3	1.021
346	81	Sisma Y SLO	0	44.4	0	0	3.5E3	1.021
348	81	Sisma Y SLD	0	41	0	0	3.5E3	1.021
350	82	Sisma Y SLV	0	108.2	0	0	3.5E3	1.021
352	82	Sisma Y SLO	0	44.4	0	0	3.5E3	1.021
354	82	Sisma Y SLD	0	41	0	0	3.5E3	1.021
356	83	Sisma Y SLV	0	107.6	0	0	3.4E3	1.021
358	83	Sisma Y SLO	0	44.1	0	0	3.4E3	1.021
360	83	Sisma Y SLD	0	40.8	0	0	3.4E3	1.021
362	84	Sisma Y SLV	0	107.6	0	0	3.4E3	1.021
364	84	Sisma Y SLO	0	44.1	0	0	3.4E3	1.021
366	84	Sisma Y SLD	0	40.8	0	0	3.4E3	1.021
368	85	Sisma Y SLV	0	106.4	0	0	3.4E3	1.021
370	85	Sisma Y SLO	0	43.6	0	0	3.4E3	1.021
372	85	Sisma Y SLD	0	40.3	0	0	3.4E3	1.021
374	86	Sisma Y SLV	0	106.4	0	0	3.4E3	1.021
376	86	Sisma Y SLO	0	43.6	0	0	3.4E3	1.021
378	86	Sisma Y SLD	0	40.3	0	0	3.4E3	1.021
380	87	Sisma Y SLV	0	106.4	0	0	3.4E3	1.021
382	87	Sisma Y SLO	0	43.6	0	0	3.4E3	1.021
384	87	Sisma Y SLD	0	40.3	0	0	3.4E3	1.021
386	88	Sisma Y SLV	0	106.4	0	0	3.4E3	1.021
388	88	Sisma Y SLO	0	43.6	0	0	3.4E3	1.021
390	88	Sisma Y SLD	0	40.3	0	0	3.4E3	1.021
392	89	Sisma Y SLV	0	105.5	0	0	3.4E3	1.021
394	89	Sisma Y SLO	0	43.3	0	0	3.4E3	1.021
396	89	Sisma Y SLD	0	40	0	0	3.4E3	1.021
398	90	Sisma Y SLV	0	105.5	0	0	3.4E3	1.021
400	90	Sisma Y SLO	0	43.3	0	0	3.4E3	1.021
402	90	Sisma Y SLD	0	40	0	0	3.4E3	1.021
404	91	Sisma Y SLV	0	138.6	0	0	3.6E3	1.243
406	91	Sisma Y SLO	0	56.9	0	0	3.6E3	1.243
408	91	Sisma Y SLD	0	52.5	0	0	3.6E3	1.243
410	92	Sisma Y SLV	0	138.6	0	0	3.6E3	1.243
412	92	Sisma Y SLO	0	56.9	0	0	3.6E3	1.243
414	92	Sisma Y SLD	0	52.5	0	0	3.6E3	1.243
416	93	Sisma Y SLV	0	139.8	0	0	3.7E3	1.243
418	93	Sisma Y SLO	0	57.3	0	0	3.7E3	1.243
420	93	Sisma Y SLD	0	53	0	0	3.7E3	1.243
422	94	Sisma Y SLV	0	139.8	0	0	3.7E3	1.243
424	94	Sisma Y SLO	0	57.3	0	0	3.7E3	1.243
426	94	Sisma Y SLD	0	53	0	0	3.7E3	1.243
428	95	Sisma Y SLV	0	139.8	0	0	3.7E3	1.243
430	95	Sisma Y SLO	0	57.3	0	0	3.7E3	1.243
432	95	Sisma Y SLD	0	53	0	0	3.7E3	1.243
434	96	Sisma Y SLV	0	139.8	0	0	3.7E3	1.243
436	96	Sisma Y SLO	0	57.3	0	0	3.7E3	1.243
438	96	Sisma Y SLD	0	53	0	0	3.7E3	1.243
440	97	Sisma Y SLV	0	141.7	0	0	3.7E3	1.243
442	97	Sisma Y SLO	0	58.1	0	0	3.7E3	1.243
444	97	Sisma Y SLD	0	53.7	0	0	3.7E3	1.243
446	98	Sisma Y SLV	0	141.7	0	0	3.7E3	1.243
448	98	Sisma Y SLO	0	58.1	0	0	3.7E3	1.243
450	98	Sisma Y SLD	0	53.7	0	0	3.7E3	1.243
452	99	Sisma Y SLV	0	142.5	0	0	3.7E3	1.243
454	99	Sisma Y SLO	0	58.4	0	0	3.7E3	1.243
456	99	Sisma Y SLD	0	54	0	0	3.7E3	1.243
458	100	Sisma Y SLV	0	142.5	0	0	3.7E3	1.243
460	100	Sisma Y SLO	0	58.4	0	0	3.7E3	1.243
462	100	Sisma Y SLD	0	54	0	0	3.7E3	1.243
464	101	Sisma Y SLV	0	142.5	0	0	3.7E3	1.243
466	101	Sisma Y SLO	0	58.4	0	0	3.7E3	1.243
468	101	Sisma Y SLD	0	54	0	0	3.7E3	1.243
470	102	Sisma Y SLV	0	142.5	0	0	3.7E3	1.243
472	102	Sisma Y SLO	0	58.4	0	0	3.7E3	1.243
474	102	Sisma Y SLD	0	54	0	0	3.7E3	1.243
476	103	Sisma Y SLV	0	142.5	0	0	3.7E3	1.243
478	103	Sisma Y SLO	0	58.4	0	0	3.7E3	1.243
480	103	Sisma Y SLD	0	54	0	0	3.7E3	1.243
482	104	Sisma Y SLV	0	142.5	0	0	3.7E3	1.243
484	104	Sisma Y SLO	0	58.4	0	0	3.7E3	1.243
486	104	Sisma Y SLD	0	54	0	0	3.7E3	1.243
488	105	Sisma Y SLV	0	141.7	0	0	3.7E3	1.243
490	105	Sisma Y SLO	0	58.1	0	0	3.7E3	1.243
492	105	Sisma Y SLD	0	53.7	0	0	3.7E3	1.243
494	106	Sisma Y SLV	0	141.7	0	0	3.7E3	1.243
496	106	Sisma Y SLO	0	58.1	0	0	3.7E3	1.243
498	106	Sisma Y SLD	0	53.7	0	0	3.7E3	1.243
500	107	Sisma Y SLV	0	139.8	0	0	3.7E3	1.243
502	107	Sisma Y SLO	0	57.3	0	0	3.7E3	1.243
504	107	Sisma Y SLD	0	53	0	0	3.7E3	1.243
506	108	Sisma Y SLV	0	139.8	0	0	3.7E3	1.243
508	108	Sisma Y SLO	0	57.3	0	0	3.7E3	1.243
510	108	Sisma Y SLD	0	53	0	0	3.7E3	1.243
512	109	Sisma Y SLV	0	139.8	0	0	3.7E3	1.243
514	109	Sisma Y SLO	0	57.3	0	0	3.7E3	1.243

Indice	Nodo	Condizione	Fx	Fy	Fz	Mz	Peso	γ
515	109	Sisma X SLD	340.8	0	0	0	3.7E3	1.243
517	110	Sisma X SLV	761.4	0	0	0	3.7E3	1.243
519	110	Sisma X SLO	415.3	0	0	0	3.7E3	1.243
521	110	Sisma X SLD	340.8	0	0	0	3.7E3	1.243
523	111	Sisma X SLV	755	0	0	0	3.6E3	1.243
525	111	Sisma X SLO	411.9	0	0	0	3.6E3	1.243
527	111	Sisma X SLD	338	0	0	0	3.6E3	1.243
529	112	Sisma X SLV	755	0	0	0	3.6E3	1.243
531	112	Sisma X SLO	411.9	0	0	0	3.6E3	1.243
533	112	Sisma X SLD	338	0	0	0	3.6E3	1.243
535	113	Sisma X SLV	1.1E3	0	0	0	4.9E3	1.391
537	113	Sisma X SLO	625.9	0	0	0	4.9E3	1.391
539	113	Sisma X SLD	513.6	0	0	0	4.9E3	1.391
541	114	Sisma X SLV	1.2E3	0	0	0	5.0E3	1.391
543	114	Sisma X SLO	629.8	0	0	0	5.0E3	1.391
545	114	Sisma X SLD	516.8	0	0	0	5.0E3	1.391
547	115	Sisma X SLV	1.2E3	0	0	0	5.0E3	1.391
549	115	Sisma X SLO	629.8	0	0	0	5.0E3	1.391
551	115	Sisma X SLD	516.8	0	0	0	5.0E3	1.391
553	116	Sisma X SLV	1.2E3	0	0	0	5.1E3	1.391
555	116	Sisma X SLO	646.6	0	0	0	5.1E3	1.391
557	116	Sisma X SLD	530.5	0	0	0	5.1E3	1.391
559	117	Sisma X SLV	1.2E3	0	0	0	5.1E3	1.391
561	117	Sisma X SLO	650.4	0	0	0	5.1E3	1.391
563	117	Sisma X SLD	533.6	0	0	0	5.1E3	1.391
565	118	Sisma X SLV	1.2E3	0	0	0	5.1E3	1.391
567	118	Sisma X SLO	650.4	0	0	0	5.1E3	1.391
569	118	Sisma X SLD	533.6	0	0	0	5.1E3	1.391
571	119	Sisma X SLV	1.2E3	0	0	0	5.1E3	1.391
573	119	Sisma X SLO	650.4	0	0	0	5.1E3	1.391
575	119	Sisma X SLD	533.6	0	0	0	5.1E3	1.391
577	120	Sisma X SLV	1.2E3	0	0	0	5.1E3	1.391
579	120	Sisma X SLO	646.6	0	0	0	5.1E3	1.391
581	120	Sisma X SLD	530.5	0	0	0	5.1E3	1.391
583	121	Sisma X SLV	1.2E3	0	0	0	5.0E3	1.391
585	121	Sisma X SLO	629.8	0	0	0	5.0E3	1.391
587	121	Sisma X SLD	516.8	0	0	0	5.0E3	1.391
589	122	Sisma X SLV	1.2E3	0	0	0	5.0E3	1.391
591	122	Sisma X SLO	629.8	0	0	0	5.0E3	1.391
593	122	Sisma X SLD	516.8	0	0	0	5.0E3	1.391
595	123	Sisma X SLV	1.1E3	0	0	0	4.9E3	1.391
597	123	Sisma X SLO	625.9	0	0	0	4.9E3	1.391
599	123	Sisma X SLD	513.6	0	0	0	4.9E3	1.391

Indice	Nodo	Condizione	Fx	Fy	Fz	Mz	Peso	γ
516	109	Sisma Y SLD	0	53	0	0	3.7E3	1.243
518	110	Sisma Y SLV	0	139.8	0	0	3.7E3	1.243
520	110	Sisma Y SLO	0	57.3	0	0	3.7E3	1.243
522	110	Sisma Y SLD	0	53	0	0	3.7E3	1.243
524	111	Sisma Y SLV	0	138.6	0	0	3.6E3	1.243
526	111	Sisma Y SLO	0	56.9	0	0	3.6E3	1.243
528	111	Sisma Y SLD	0	52.5	0	0	3.6E3	1.243
530	112	Sisma Y SLV	0	138.6	0	0	3.6E3	1.243
532	112	Sisma Y SLO	0	56.9	0	0	3.6E3	1.243
534	112	Sisma Y SLD	0	52.5	0	0	3.6E3	1.243
536	113	Sisma Y SLV	0	210.7	0	0	4.9E3	1.391
538	113	Sisma Y SLO	0	86.4	0	0	4.9E3	1.391
540	113	Sisma Y SLD	0	79.8	0	0	4.9E3	1.391
542	114	Sisma Y SLV	0	212	0	0	5.0E3	1.391
544	114	Sisma Y SLO	0	86.9	0	0	5.0E3	1.391
546	114	Sisma Y SLD	0	80.3	0	0	5.0E3	1.391
548	115	Sisma Y SLV	0	212	0	0	5.0E3	1.391
550	115	Sisma Y SLO	0	86.9	0	0	5.0E3	1.391
552	115	Sisma Y SLD	0	80.3	0	0	5.0E3	1.391
554	116	Sisma Y SLV	0	217.6	0	0	5.1E3	1.391
556	116	Sisma Y SLO	0	89.2	0	0	5.1E3	1.391
558	116	Sisma Y SLD	0	82.5	0	0	5.1E3	1.391
560	117	Sisma Y SLV	0	218.9	0	0	5.1E3	1.391
562	117	Sisma Y SLO	0	89.8	0	0	5.1E3	1.391
564	117	Sisma Y SLD	0	82.9	0	0	5.1E3	1.391
566	118	Sisma Y SLV	0	218.9	0	0	5.1E3	1.391
568	118	Sisma Y SLO	0	89.8	0	0	5.1E3	1.391
570	118	Sisma Y SLD	0	82.9	0	0	5.1E3	1.391
572	119	Sisma Y SLV	0	218.9	0	0	5.1E3	1.391
574	119	Sisma Y SLO	0	89.8	0	0	5.1E3	1.391
576	119	Sisma Y SLD	0	82.9	0	0	5.1E3	1.391
578	120	Sisma Y SLV	0	217.6	0	0	5.1E3	1.391
580	120	Sisma Y SLO	0	89.2	0	0	5.1E3	1.391
582	120	Sisma Y SLD	0	82.5	0	0	5.1E3	1.391
584	121	Sisma Y SLV	0	212	0	0	5.0E3	1.391
586	121	Sisma Y SLO	0	86.9	0	0	5.0E3	1.391
588	121	Sisma Y SLD	0	80.3	0	0	5.0E3	1.391
590	122	Sisma Y SLV	0	212	0	0	5.0E3	1.391
592	122	Sisma Y SLO	0	86.9	0	0	5.0E3	1.391
594	122	Sisma Y SLD	0	80.3	0	0	5.0E3	1.391
596	123	Sisma Y SLV	0	210.7	0	0	4.9E3	1.391
598	123	Sisma Y SLO	0	86.4	0	0	4.9E3	1.391
600	123	Sisma Y SLD	0	79.8	0	0	4.9E3	1.391

7.4 ASTE

7.4.1 Carichi su aste

7.4.1.1 Carichi trapezoidali locali

***Indice asta**: indice dell'asta a cui si riferisce il carico trapezoidale.*
***Condizione**: condizione elementare di carico a cui si riferisce il carico.*
***Posizione iniziale**: posizione iniziale del carico sull'asse locale 1. [cm]*
***F1 iniziale**: componente del valore iniziale del carico lungo l'asse locale 1. [daN/cm]*
***F2 iniziale**: componente del valore iniziale del carico lungo l'asse locale 2. [daN/cm]*
***F3 iniziale**: componente del valore iniziale del carico lungo l'asse locale 3. [daN/cm]*
***Posizione finale**: posizione finale del carico sull'asse locale 1. [cm]*
***F1 finale**: componente del valore finale del carico lungo l'asse locale 1. [daN/cm]*
***F2 finale**: componente del valore finale del carico lungo l'asse locale 2. [daN/cm]*
***F3 finale**: componente del valore finale del carico lungo l'asse locale 3. [daN/cm]*

Indice asta	Condizione	Posizione iniziale	F1 iniziale	F2 iniziale	F3 iniziale	Posizione finale	F1 finale	F2 finale	F3 finale
1	Pesi strutturali	0	-53.131	-22.581	0	108.7	-53.131	-22.581	0
2	Pesi strutturali	0	-53.131	-22.581	0	108.7	-53.131	-22.581	0
3	Pesi strutturali	0	-38.641	-42.891	0	74.7	-38.641	-42.891	0
4	Pesi strutturali	0	-38.641	-42.891	0	74.7	-38.641	-42.891	0
5	Pesi strutturali	0	-11.092	-26.806	0	78.5	-11.092	-26.806	0
6	Pesi strutturali	0	-11.092	-26.806	0	78.5	-11.092	-26.806	0
7	Pesi strutturali	0	-3.328	-28.204	0	170.7	-3.328	-28.204	0
8	Pesi strutturali	0	-3.328	-28.204	0	170.7	-3.328	-28.204	0
16	Pesi strutturali	0	-53.131	-22.581	0	108.7	-53.131	-22.581	0
17	Pesi strutturali	0	-53.131	-22.581	0	108.7	-53.131	-22.581	0
18	Pesi strutturali	0	-38.641	-42.891	0	74.7	-38.641	-42.891	0
19	Pesi strutturali	0	-38.641	-42.891	0	74.7	-38.641	-42.891	0
20	Pesi strutturali	0	-11.092	-26.806	0	78.5	-11.092	-26.806	0
21	Pesi strutturali	0	-11.092	-26.806	0	78.5	-11.092	-26.806	0
22	Pesi strutturali	0	-3.328	-28.204	0	170.7	-3.328	-28.204	0
23	Pesi strutturali	0	-3.328	-28.204	0	170.7	-3.328	-28.204	0
31	Pesi strutturali	0	-53.131	-22.581	0	108.7	-53.131	-22.581	0
32	Pesi strutturali	0	-53.131	-22.581	0	108.7	-53.131	-22.581	0
33	Pesi strutturali	0	-38.641	-42.891	0	74.7	-38.641	-42.891	0
34	Pesi strutturali	0	-38.641	-42.891	0	74.7	-38.641	-42.891	0
35	Pesi strutturali	0	-11.092	-26.806	0	78.5	-11.092	-26.806	0
36	Pesi strutturali	0	-11.092	-26.806	0	78.5	-11.092	-26.806	0

Indice asta	Condizione	Posizione iniziale	F1 iniziale	F2 iniziale	F3 iniziale	Posizione finale	F1 finale	F2 finale	F3 finale
37	Pesi strutturali	0	-3.328	-28.204	0	170.7	-3.328	-28.204	0
38	Pesi strutturali	0	-3.328	-28.204	0	170.7	-3.328	-28.204	0
46	Pesi strutturali	0	-53.131	-22.581	0	108.7	-53.131	-22.581	0
47	Pesi strutturali	0	-53.131	-22.581	0	108.7	-53.131	-22.581	0
48	Pesi strutturali	0	-38.641	-42.891	0	74.7	-38.641	-42.891	0
49	Pesi strutturali	0	-38.641	-42.891	0	74.7	-38.641	-42.891	0
50	Pesi strutturali	0	-11.092	-26.806	0	78.5	-11.092	-26.806	0
51	Pesi strutturali	0	-11.092	-26.806	0	78.5	-11.092	-26.806	0
52	Pesi strutturali	0	-3.328	-28.204	0	170.7	-3.328	-28.204	0
53	Pesi strutturali	0	-3.328	-28.204	0	170.7	-3.328	-28.204	0
61	Pesi strutturali	0	-53.131	-22.581	0	108.7	-53.131	-22.581	0
62	Pesi strutturali	0	-53.131	-22.581	0	108.7	-53.131	-22.581	0
63	Pesi strutturali	0	-38.641	-42.891	0	74.7	-38.641	-42.891	0
64	Pesi strutturali	0	-38.641	-42.891	0	74.7	-38.641	-42.891	0
65	Pesi strutturali	0	-11.092	-26.806	0	78.5	-11.092	-26.806	0
66	Pesi strutturali	0	-11.092	-26.806	0	78.5	-11.092	-26.806	0
67	Pesi strutturali	0	-3.328	-28.204	0	170.7	-3.328	-28.204	0
68	Pesi strutturali	0	-3.328	-28.204	0	170.7	-3.328	-28.204	0
76	Pesi strutturali	0	-53.131	-22.581	0	108.7	-53.131	-22.581	0
77	Pesi strutturali	0	-53.131	-22.581	0	108.7	-53.131	-22.581	0
78	Pesi strutturali	0	-38.641	-42.891	0	74.7	-38.641	-42.891	0
79	Pesi strutturali	0	-38.641	-42.891	0	74.7	-38.641	-42.891	0
80	Pesi strutturali	0	-11.092	-26.806	0	78.5	-11.092	-26.806	0
81	Pesi strutturali	0	-11.092	-26.806	0	78.5	-11.092	-26.806	0
82	Pesi strutturali	0	-3.328	-28.204	0	170.7	-3.328	-28.204	0
83	Pesi strutturali	0	-3.328	-28.204	0	170.7	-3.328	-28.204	0
91	Pesi strutturali	0	-53.131	-22.581	0	108.7	-53.131	-22.581	0
92	Pesi strutturali	0	-53.131	-22.581	0	108.7	-53.131	-22.581	0
93	Pesi strutturali	0	-38.641	-42.891	0	74.7	-38.641	-42.891	0
94	Pesi strutturali	0	-38.641	-42.891	0	74.7	-38.641	-42.891	0
95	Pesi strutturali	0	-11.092	-26.806	0	78.5	-11.092	-26.806	0
96	Pesi strutturali	0	-11.092	-26.806	0	78.5	-11.092	-26.806	0
97	Pesi strutturali	0	-3.328	-28.204	0	170.7	-3.328	-28.204	0
98	Pesi strutturali	0	-3.328	-28.204	0	170.7	-3.328	-28.204	0
106	Pesi strutturali	0	-53.131	-22.581	0	108.7	-53.131	-22.581	0
107	Pesi strutturali	0	-53.131	-22.581	0	108.7	-53.131	-22.581	0
108	Pesi strutturali	0	-38.641	-42.891	0	74.7	-38.641	-42.891	0
109	Pesi strutturali	0	-38.641	-42.891	0	74.7	-38.641	-42.891	0
110	Pesi strutturali	0	-11.092	-26.806	0	78.5	-11.092	-26.806	0
111	Pesi strutturali	0	-11.092	-26.806	0	78.5	-11.092	-26.806	0
112	Pesi strutturali	0	-3.328	-28.204	0	170.7	-3.328	-28.204	0
113	Pesi strutturali	0	-3.328	-28.204	0	170.7	-3.328	-28.204	0
121	Pesi strutturali	0	-53.131	-22.581	0	108.7	-53.131	-22.581	0
122	Pesi strutturali	0	-53.131	-22.581	0	108.7	-53.131	-22.581	0
123	Pesi strutturali	0	-38.641	-42.891	0	74.7	-38.641	-42.891	0
124	Pesi strutturali	0	-38.641	-42.891	0	74.7	-38.641	-42.891	0
125	Pesi strutturali	0	-11.092	-26.806	0	78.5	-11.092	-26.806	0
126	Pesi strutturali	0	-11.092	-26.806	0	78.5	-11.092	-26.806	0
127	Pesi strutturali	0	-3.328	-28.204	0	170.7	-3.328	-28.204	0
128	Pesi strutturali	0	-3.328	-28.204	0	170.7	-3.328	-28.204	0
136	Pesi strutturali	0	-53.131	-22.581	0	108.7	-53.131	-22.581	0
137	Pesi strutturali	0	-53.131	-22.581	0	108.7	-53.131	-22.581	0
138	Pesi strutturali	0	-38.641	-42.891	0	74.7	-38.641	-42.891	0
139	Pesi strutturali	0	-38.641	-42.891	0	74.7	-38.641	-42.891	0
140	Pesi strutturali	0	-11.092	-26.806	0	78.5	-11.092	-26.806	0
141	Pesi strutturali	0	-11.092	-26.806	0	78.5	-11.092	-26.806	0
142	Pesi strutturali	0	-3.328	-28.204	0	170.7	-3.328	-28.204	0
143	Pesi strutturali	0	-3.328	-28.204	0	170.7	-3.328	-28.204	0
151	Pesi strutturali	0	-53.131	-22.581	0	108.7	-53.131	-22.581	0
152	Pesi strutturali	0	-53.131	-22.581	0	108.7	-53.131	-22.581	0
153	Pesi strutturali	0	-38.641	-42.891	0	74.7	-38.641	-42.891	0
154	Pesi strutturali	0	-38.641	-42.891	0	74.7	-38.641	-42.891	0
155	Pesi strutturali	0	-11.092	-26.806	0	78.5	-11.092	-26.806	0
156	Pesi strutturali	0	-11.092	-26.806	0	78.5	-11.092	-26.806	0
157	Pesi strutturali	0	-3.328	-28.204	0	170.7	-3.328	-28.204	0
158	Pesi strutturali	0	-3.328	-28.204	0	170.7	-3.328	-28.204	0
166	Eccezione SdC3	0	0	-0.981	0	200	0	-0.981	0
166	Neve	0	0	-0.471	0	200	0	-0.471	0
166	Eccezione SdC3	0	0	-0.934	0	200	0	-0.934	0
166	Neve	0	0	-0.448	0	200	0	-0.448	0
167	Eccezione SdC3	0	0	-0.934	0	200	0	-0.934	0
167	Neve	0	0	-0.448	0	200	0	-0.448	0
167	Eccezione SdC3	0	0	-0.981	0	200	0	-0.981	0
167	Neve	0	0	-0.471	0	200	0	-0.471	0
168	Eccezione SdC3	0	0	-0.934	0	200	0	-0.934	0
168	Neve	0	0	-0.448	0	200	0	-0.448	0
168	Eccezione SdC3	0	0	0	0	9	0	-0.122	0
168	Neve	0	0	0	0	9	0	-0.059	0
168	Eccezione SdC3	9	0	-0.122	0	18	0	-0.123	0
168	Neve	9	0	-0.059	0	18	0	-0.059	0
168	Eccezione SdC3	18	0	-0.123	0	37.6	0	-0.266	0
168	Neve	18	0	-0.059	0	37.6	0	-0.128	0
168	Eccezione SdC3	37.6	0	-0.266	0	55.7	0	-0.378	0
168	Neve	37.6	0	-0.128	0	55.7	0	-0.182	0
168	Eccezione SdC3	55.7	0	-0.378	0	82	0	-0.511	0
168	Neve	55.7	0	-0.182	0	82	0	-0.245	0
168	Eccezione SdC3	82	0	-0.511	0	91	0	-0.618	0
168	Neve	82	0	-0.245	0	91	0	-0.297	0
168	Eccezione SdC3	91	0	-0.618	0	100	0	-0.679	0
168	Neve	91	0	-0.297	0	100	0	-0.326	0
168	Eccezione SdC3	100	0	-0.679	0	109	0	-0.618	0
168	Neve	100	0	-0.326	0	109	0	-0.297	0
168	Eccezione SdC3	109	0	-0.618	0	118	0	-0.511	0
168	Neve	109	0	-0.297	0	118	0	-0.245	0
168	Eccezione SdC3	118	0	-0.511	0	144.3	0	-0.378	0
168	Neve	118	0	-0.245	0	144.3	0	-0.182	0

Indice asta	Condizione	Posizione iniziale	F1 iniziale	F2 iniziale	F3 iniziale	Posizione finale	F1 finale	F2 finale	F3 finale
168	Eccezione SdC3	144.3	0	-0.378	0	162.4	0	-0.266	0
168	Neve	144.3	0	-0.182	0	162.4	0	-0.128	0
168	Eccezione SdC3	162.4	0	-0.266	0	182	0	-0.123	0
168	Neve	162.4	0	-0.128	0	182	0	-0.059	0
168	Eccezione SdC3	182	0	-0.123	0	191	0	-0.122	0
168	Neve	182	0	-0.059	0	191	0	-0.059	0
169	Eccezione SdC3	0	0	0	0	9	0	-0.122	0
169	Neve	0	0	0	0	9	0	-0.059	0
169	Eccezione SdC3	9	0	-0.122	0	18	0	-0.123	0
169	Neve	9	0	-0.059	0	18	0	-0.059	0
169	Eccezione SdC3	18	0	-0.123	0	37.6	0	-0.266	0
169	Neve	18	0	-0.059	0	37.6	0	-0.128	0
169	Eccezione SdC3	37.6	0	-0.266	0	55.7	0	-0.378	0
169	Neve	37.6	0	-0.128	0	55.7	0	-0.182	0
169	Eccezione SdC3	55.7	0	-0.378	0	82	0	-0.511	0
169	Neve	55.7	0	-0.182	0	82	0	-0.245	0
169	Eccezione SdC3	82	0	-0.511	0	91	0	-0.618	0
169	Neve	82	0	-0.245	0	91	0	-0.297	0
169	Eccezione SdC3	91	0	-0.618	0	100	0	-0.679	0
169	Neve	91	0	-0.297	0	100	0	-0.326	0
169	Eccezione SdC3	100	0	-0.679	0	109	0	-0.618	0
169	Neve	100	0	-0.326	0	109	0	-0.297	0
169	Eccezione SdC3	109	0	-0.618	0	118	0	-0.511	0
169	Neve	109	0	-0.297	0	118	0	-0.245	0
169	Eccezione SdC3	118	0	-0.511	0	144.3	0	-0.378	0
169	Neve	118	0	-0.245	0	144.3	0	-0.182	0
169	Eccezione SdC3	144.3	0	-0.378	0	162.4	0	-0.266	0
169	Neve	144.3	0	-0.182	0	162.4	0	-0.128	0
169	Eccezione SdC3	162.4	0	-0.266	0	182	0	-0.123	0
169	Neve	162.4	0	-0.128	0	182	0	-0.059	0
169	Eccezione SdC3	182	0	-0.123	0	191	0	-0.122	0
169	Neve	182	0	-0.059	0	191	0	-0.059	0
169	Eccezione SdC3	191	0	-0.122	0	200	0	0	0
169	Neve	191	0	-0.059	0	200	0	0	0
169	Eccezione SdC3	0	0	-0.934	0	200	0	-0.934	0
169	Neve	0	0	-0.448	0	200	0	-0.448	0
170	Eccezione SdC3	0	0	-2.098	0	200	0	-2.098	0
170	Neve	0	0	-2.031	0	200	0	-2.031	0
170	Eccezionale SdC4	0	0	-1.51	0	200	0	-1.51	0
170	Eccezione SdC3	0	0	-0.981	0	200	0	-0.943	0
170	Neve	0	0	-0.471	0	200	0	-0.453	0
171	Eccezione SdC3	0	0	-2.133	0	200	0	-2.133	0
171	Neve	0	0	-2.048	0	200	0	-2.048	0
171	Eccezionale SdC4	0	0	-1.51	0	200	0	-1.51	0
171	Eccezione SdC3	0	0	-0.981	0	200	0	-0.981	0
171	Neve	0	0	-0.471	0	200	0	-0.471	0
172	Eccezione SdC3	0	0	-2.133	0	200	0	-2.133	0
172	Neve	0	0	-2.048	0	200	0	-2.048	0
172	Eccezionale SdC4	0	0	-1.51	0	200	0	-1.51	0
172	Eccezione SdC3	0	0	-2.169	0	200	0	-2.169	0
172	Neve	0	0	-2.065	0	200	0	-2.065	0
172	Eccezionale SdC4	0	0	-1.51	0	200	0	-1.51	0
173	Eccezione SdC3	0	0	-0.981	0	200	0	-0.981	0
173	Neve	0	0	-0.471	0	200	0	-0.471	0
173	Eccezione SdC3	0	0	-0.934	0	200	0	-0.934	0
173	Neve	0	0	-0.448	0	200	0	-0.448	0
174	Eccezione SdC3	0	0	-0.934	0	200	0	-0.934	0
174	Neve	0	0	-0.448	0	200	0	-0.448	0
174	Eccezione SdC3	0	0	-0.981	0	200	0	-0.981	0
174	Neve	0	0	-0.471	0	200	0	-0.471	0
175	Eccezione SdC3	0	0	-0.934	0	200	0	-0.934	0
175	Neve	0	0	-0.448	0	200	0	-0.448	0
175	Eccezione SdC3	9	0	-0.122	0	18	0	-0.123	0
175	Neve	9	0	-0.059	0	18	0	-0.059	0
175	Eccezione SdC3	18	0	-0.123	0	37.6	0	-0.266	0
175	Neve	18	0	-0.059	0	37.6	0	-0.128	0
175	Eccezione SdC3	37.6	0	-0.266	0	55.7	0	-0.378	0
175	Neve	37.6	0	-0.128	0	55.7	0	-0.182	0
175	Eccezione SdC3	55.7	0	-0.378	0	82	0	-0.511	0
175	Neve	55.7	0	-0.182	0	82	0	-0.245	0
175	Eccezione SdC3	82	0	-0.511	0	91	0	-0.618	0
175	Neve	82	0	-0.245	0	91	0	-0.297	0
175	Eccezione SdC3	91	0	-0.618	0	100	0	-0.679	0
175	Neve	91	0	-0.297	0	100	0	-0.326	0
175	Eccezione SdC3	100	0	-0.679	0	109	0	-0.618	0
175	Neve	100	0	-0.326	0	109	0	-0.297	0
175	Eccezione SdC3	109	0	-0.618	0	118	0	-0.511	0
175	Neve	109	0	-0.297	0	118	0	-0.245	0
175	Eccezione SdC3	118	0	-0.511	0	144.3	0	-0.378	0
175	Neve	118	0	-0.245	0	144.3	0	-0.182	0
175	Eccezione SdC3	144.3	0	-0.378	0	162.4	0	-0.266	0
175	Neve	144.3	0	-0.182	0	162.4	0	-0.128	0
175	Eccezione SdC3	162.4	0	-0.266	0	182	0	-0.123	0
175	Neve	162.4	0	-0.128	0	182	0	-0.059	0
175	Eccezione SdC3	182	0	-0.123	0	191	0	-0.122	0
175	Neve	182	0	-0.059	0	191	0	-0.059	0
175	Eccezione SdC3	191	0	-0.122	0	200	0	0	0
175	Neve	191	0	-0.059	0	200	0	0	0
176	Eccezione SdC3	0	0	0	0	9	0	-0.122	0
176	Neve	0	0	0	0	9	0	-0.059	0
176	Eccezione SdC3	9	0	-0.122	0	18	0	-0.123	0
176	Neve	9	0	-0.059	0	18	0	-0.059	0
176	Eccezione SdC3	18	0	-0.123	0	37.6	0	-0.266	0
176	Neve	18	0	-0.059	0	37.6	0	-0.128	0
176	Eccezione SdC3	37.6	0	-0.266	0	55.7	0	-0.378	0
176	Neve	37.6	0	-0.128	0	55.7	0	-0.182	0

Indice asta	Condizione	Posizione iniziale	F1 iniziale	F2 iniziale	F3 iniziale	Posizione finale	F1 finale	F2 finale	F3 finale
176	Eccezione SdC3	55.7	0	-0.378	0	82	0	-0.511	0
176	Neve	55.7	0	-0.182	0	82	0	-0.245	0
176	Eccezione SdC3	82	0	-0.511	0	91	0	-0.618	0
176	Neve	82	0	-0.245	0	91	0	-0.297	0
176	Eccezione SdC3	91	0	-0.618	0	100	0	-0.679	0
176	Neve	91	0	-0.297	0	100	0	-0.326	0
176	Eccezione SdC3	100	0	-0.679	0	109	0	-0.618	0
176	Neve	100	0	-0.326	0	109	0	-0.297	0
176	Eccezione SdC3	109	0	-0.618	0	118	0	-0.511	0
176	Neve	109	0	-0.297	0	118	0	-0.245	0
176	Eccezione SdC3	118	0	-0.511	0	144.3	0	-0.378	0
176	Neve	118	0	-0.245	0	144.3	0	-0.182	0
176	Eccezione SdC3	144.3	0	-0.378	0	162.4	0	-0.266	0
176	Neve	144.3	0	-0.182	0	162.4	0	-0.128	0
176	Eccezione SdC3	162.4	0	-0.266	0	182	0	-0.123	0
176	Neve	162.4	0	-0.128	0	182	0	-0.059	0
176	Eccezione SdC3	182	0	-0.123	0	191	0	0	0
176	Neve	182	0	-0.059	0	191	0	0	0
176	Eccezione SdC3	191	0	-0.122	0	200	0	0	0
176	Neve	191	0	-0.059	0	200	0	0	0
176	Eccezione SdC3	0	0	-0.934	0	200	0	-0.934	0
176	Neve	0	0	-0.448	0	200	0	-0.448	0
177	Eccezione SdC3	0	0	-2.098	0	200	0	-2.098	0
177	Neve	0	0	-2.031	0	200	0	-2.031	0
177	Eccezionale SdC4	0	0	-1.51	0	200	0	-1.51	0
177	Eccezione SdC3	0	0	-0.981	0	200	0	-0.943	0
177	Neve	0	0	-0.471	0	200	0	-0.453	0
178	Eccezione SdC3	0	0	-2.133	0	200	0	-2.133	0
178	Neve	0	0	-2.048	0	200	0	-2.048	0
178	Eccezionale SdC4	0	0	-1.51	0	200	0	-1.51	0
178	Eccezione SdC3	0	0	-0.981	0	200	0	-0.981	0
178	Neve	0	0	-0.471	0	200	0	-0.471	0
179	Eccezione SdC3	0	0	-2.133	0	200	0	-2.133	0
179	Neve	0	0	-2.048	0	200	0	-2.048	0
179	Eccezionale SdC4	0	0	-1.51	0	200	0	-1.51	0
179	Eccezione SdC3	0	0	-2.169	0	200	0	-2.169	0
179	Neve	0	0	-2.065	0	200	0	-2.065	0
179	Eccezionale SdC4	0	0	-1.51	0	200	0	-1.51	0
180	Eccezione SdC3	0	0	-0.981	0	200	0	-0.981	0
180	Neve	0	0	-0.471	0	200	0	-0.471	0
180	Eccezione SdC3	0	0	-0.934	0	200	0	-0.934	0
180	Neve	0	0	-0.448	0	200	0	-0.448	0
181	Eccezione SdC3	0	0	-0.934	0	200	0	-0.934	0
181	Neve	0	0	-0.448	0	200	0	-0.448	0
181	Eccezione SdC3	0	0	-0.981	0	200	0	-0.981	0
181	Neve	0	0	-0.471	0	200	0	-0.471	0
182	Eccezione SdC3	0	0	-0.934	0	200	0	-0.934	0
182	Neve	0	0	-0.448	0	200	0	-0.448	0
182	Eccezione SdC3	0	0	0	0	9	0	-0.122	0
182	Neve	0	0	0	0	9	0	-0.059	0
182	Eccezione SdC3	9	0	-0.122	0	18	0	-0.123	0
182	Neve	9	0	-0.059	0	18	0	-0.059	0
182	Eccezione SdC3	18	0	-0.123	0	37.6	0	-0.266	0
182	Neve	18	0	-0.059	0	37.6	0	-0.128	0
182	Eccezione SdC3	37.6	0	-0.266	0	55.7	0	-0.378	0
182	Neve	37.6	0	-0.128	0	55.7	0	-0.182	0
182	Eccezione SdC3	55.7	0	-0.378	0	82	0	-0.511	0
182	Neve	55.7	0	-0.182	0	82	0	-0.245	0
182	Eccezione SdC3	82	0	-0.511	0	91	0	-0.618	0
182	Neve	82	0	-0.245	0	91	0	-0.297	0
182	Eccezione SdC3	91	0	-0.618	0	100	0	-0.679	0
182	Neve	91	0	-0.297	0	100	0	-0.326	0
182	Eccezione SdC3	100	0	-0.679	0	109	0	-0.618	0
182	Neve	100	0	-0.326	0	109	0	-0.297	0
182	Eccezione SdC3	109	0	-0.618	0	118	0	-0.511	0
182	Neve	109	0	-0.297	0	118	0	-0.245	0
182	Eccezione SdC3	118	0	-0.511	0	144.3	0	-0.378	0
182	Neve	118	0	-0.245	0	144.3	0	-0.182	0
182	Eccezione SdC3	144.3	0	-0.378	0	162.4	0	-0.266	0
182	Neve	144.3	0	-0.182	0	162.4	0	-0.128	0
182	Eccezione SdC3	162.4	0	-0.266	0	182	0	-0.123	0
182	Neve	162.4	0	-0.128	0	182	0	-0.059	0
182	Eccezione SdC3	182	0	-0.123	0	200	0	0	0
182	Neve	182	0	-0.059	0	200	0	0	0
183	Eccezione SdC3	0	0	0	0	9	0	-0.122	0
183	Neve	0	0	0	0	9	0	-0.059	0
183	Eccezione SdC3	9	0	0	0	18	0	-0.123	0
183	Neve	9	0	0	0	18	0	-0.059	0
183	Eccezione SdC3	18	0	-0.123	0	37.6	0	-0.266	0
183	Neve	18	0	-0.059	0	37.6	0	-0.128	0
183	Eccezione SdC3	37.6	0	-0.266	0	55.7	0	-0.378	0
183	Neve	37.6	0	-0.128	0	55.7	0	-0.182	0
183	Eccezione SdC3	55.7	0	-0.378	0	82	0	-0.511	0
183	Neve	55.7	0	-0.182	0	82	0	-0.245	0
183	Eccezione SdC3	82	0	-0.511	0	91	0	-0.618	0
183	Neve	82	0	-0.245	0	91	0	-0.297	0
183	Eccezione SdC3	91	0	-0.618	0	100	0	-0.679	0
183	Neve	91	0	-0.297	0	100	0	-0.326	0
183	Eccezione SdC3	100	0	-0.679	0	109	0	-0.618	0
183	Neve	100	0	-0.326	0	109	0	-0.297	0
183	Eccezione SdC3	109	0	-0.618	0	118	0	-0.511	0
183	Neve	109	0	-0.297	0	118	0	-0.245	0
183	Eccezione SdC3	118	0	-0.511	0	144.3	0	-0.378	0
183	Neve	118	0	-0.245	0	144.3	0	-0.182	0
183	Eccezione SdC3	144.3	0	-0.378	0	162.4	0	-0.266	0
183	Neve	144.3	0	-0.182	0	162.4	0	-0.128	0

Indice asta	Condizione	Posizione iniziale	F1 iniziale	F2 iniziale	F3 iniziale	Posizione finale	F1 finale	F2 finale	F3 finale
183	Eccezione SdC3	162.4	0	-0.266	0	182	0	-0.123	0
183	Neve	162.4	0	-0.128	0	182	0	-0.059	0
183	Eccezione SdC3	182	0	-0.123	0	200	0	0	0
183	Neve	182	0	-0.059	0	200	0	0	0
183	Eccezione SdC3	0	0	-0.934	0	200	0	-0.934	0
183	Neve	0	0	-0.448	0	200	0	-0.448	0
184	Eccezione SdC3	0	0	-2.098	0	200	0	-2.098	0
184	Neve	0	0	-2.031	0	200	0	-2.031	0
184	Eccezionale SdC4	0	0	-1.51	0	200	0	-1.51	0
184	Eccezione SdC3	0	0	-0.981	0	200	0	-0.943	0
184	Neve	0	0	-0.471	0	200	0	-0.453	0
185	Eccezione SdC3	0	0	-2.133	0	200	0	-2.133	0
185	Neve	0	0	-2.048	0	200	0	-2.048	0
185	Eccezionale SdC4	0	0	-1.51	0	200	0	-1.51	0
185	Eccezione SdC3	0	0	-0.981	0	200	0	-0.981	0
185	Neve	0	0	-0.471	0	200	0	-0.471	0
186	Eccezione SdC3	0	0	-2.133	0	200	0	-2.133	0
186	Neve	0	0	-2.048	0	200	0	-2.048	0
186	Eccezionale SdC4	0	0	-1.51	0	200	0	-1.51	0
186	Eccezione SdC3	0	0	-2.169	0	200	0	-2.169	0
186	Neve	0	0	-2.065	0	200	0	-2.065	0
186	Eccezionale SdC4	0	0	-1.51	0	200	0	-1.51	0
187	Neve	0	0	-0.471	0	200	0	-0.471	0
187	Eccezionale SdC1	0	0	-3.531	0	200	0	-3.531	0
187	Neve	0	0	-0.448	0	200	0	-0.448	0
187	Eccezionale SdC1	0	0	-3.362	0	200	0	-3.362	0
188	Neve	0	0	-0.448	0	200	0	-0.448	0
188	Eccezionale SdC1	0	0	-3.362	0	200	0	-3.362	0
188	Neve	0	0	-0.471	0	200	0	-0.471	0
188	Eccezionale SdC1	0	0	-3.531	0	200	0	-3.531	0
189	Neve	0	0	-0.448	0	200	0	-0.448	0
189	Eccezionale SdC1	0	0	-3.362	0	200	0	-3.362	0
189	Neve	0	0	0	0	18	0	-0.059	0
189	Eccezionale SdC1	0	0	0	0	18	0	-0.441	0
189	Neve	18	0	-0.059	0	33.7	0	-0.102	0
189	Eccezionale SdC1	18	0	-0.441	0	33.7	0	-0.767	0
189	Neve	33.7	0	-0.102	0	51.8	0	-0.169	0
189	Eccezionale SdC1	33.7	0	-0.767	0	51.8	0	-1.266	0
189	Neve	51.8	0	-0.169	0	91	0	-0.297	0
189	Eccezionale SdC1	51.8	0	-1.266	0	91	0	-2.224	0
189	Neve	91	0	-0.297	0	100	0	-0.337	0
189	Eccezionale SdC1	91	0	-2.224	0	100	0	-2.531	0
189	Neve	100	0	-0.337	0	109	0	-0.297	0
189	Eccezionale SdC1	100	0	-2.531	0	109	0	-2.224	0
189	Neve	109	0	-0.297	0	148.2	0	-0.169	0
189	Eccezionale SdC1	109	0	-2.224	0	148.2	0	-1.266	0
189	Neve	148.2	0	-0.169	0	166.3	0	-0.102	0
189	Eccezionale SdC1	148.2	0	-1.266	0	166.3	0	-0.767	0
189	Neve	166.3	0	-0.102	0	182	0	-0.059	0
189	Eccezionale SdC1	166.3	0	-0.767	0	182	0	-0.441	0
189	Neve	182	0	-0.059	0	200	0	0	0
189	Eccezionale SdC1	182	0	-0.441	0	200	0	0	0
190	Neve	0	0	0	0	18	0	-0.059	0
190	Eccezionale SdC1	0	0	0	0	18	0	-0.441	0
190	Neve	18	0	-0.059	0	33.7	0	-0.102	0
190	Eccezionale SdC1	18	0	-0.441	0	33.7	0	-0.767	0
190	Neve	33.7	0	-0.102	0	51.8	0	-0.169	0
190	Eccezionale SdC1	33.7	0	-0.767	0	51.8	0	-1.266	0
190	Neve	51.8	0	-0.169	0	91	0	-0.297	0
190	Eccezionale SdC1	51.8	0	-1.266	0	91	0	-2.224	0
190	Neve	91	0	-0.297	0	100	0	-0.337	0
190	Eccezionale SdC1	91	0	-2.224	0	100	0	-2.531	0
190	Neve	100	0	-0.337	0	109	0	-0.297	0
190	Eccezionale SdC1	100	0	-2.531	0	109	0	-2.224	0
190	Neve	109	0	-0.297	0	148.2	0	-0.169	0
190	Eccezionale SdC1	109	0	-2.224	0	148.2	0	-1.266	0
190	Neve	148.2	0	-0.169	0	166.3	0	-0.102	0
190	Eccezionale SdC1	148.2	0	-1.266	0	166.3	0	-0.767	0
190	Neve	166.3	0	-0.102	0	182	0	-0.059	0
190	Eccezionale SdC1	166.3	0	-0.767	0	182	0	-0.441	0
190	Neve	182	0	-0.059	0	200	0	0	0
190	Eccezionale SdC1	182	0	-0.441	0	200	0	0	0
190	Neve	0	0	-0.448	0	200	0	-0.448	0
190	Eccezionale SdC1	0	0	-3.362	0	200	0	-3.362	0
191	Neve	0	0	-2.048	0	200	0	-2.048	0
191	Eccezionale SdC1	0	0	-114.617	0	200	0	-114.617	0
191	Neve	0	0	-0.453	0	188	0	-0.471	0
191	Eccezionale SdC1	0	0	-3.394	0	188	0	-3.531	0
191	Neve	188	0	-0.471	0	200	0	-0.471	0
191	Eccezionale SdC1	188	0	-3.531	0	200	0	-3.531	0
192	Neve	0	0	-2.048	0	200	0	-2.048	0
192	Eccezionale SdC1	0	0	-114.617	0	200	0	-114.617	0
192	Neve	0	0	-0.453	0	188	0	-0.471	0
192	Eccezionale SdC1	0	0	-3.394	0	188	0	-3.531	0
192	Neve	188	0	-0.471	0	200	0	-0.471	0
192	Eccezionale SdC1	188	0	-3.531	0	200	0	-3.531	0
193	Neve	0	0	-2.048	0	200	0	-2.048	0
193	Eccezionale SdC1	0	0	-114.617	0	200	0	-114.617	0
193	Neve	0	0	-2.031	0	188	0	-2.048	0
193	Eccezionale SdC1	0	0	-114.49	0	188	0	-114.617	0
193	Neve	188	0	-2.048	0	200	0	-2.048	0
193	Eccezionale SdC1	188	0	-114.617	0	200	0	-114.617	0
194	Neve	0	0	-0.471	0	200	0	-0.471	0
194	Eccezionale SdC1	0	0	-3.531	0	200	0	-3.531	0
194	Neve	0	0	-0.448	0	200	0	-0.448	0
194	Eccezionale SdC1	0	0	-3.362	0	200	0	-3.362	0

Indice asta	Condizione	Posizione iniziale	F1 iniziale	F2 iniziale	F3 iniziale	Posizione finale	F1 finale	F2 finale	F3 finale
195	Neve	0	0	-0.448	0	200	0	-0.448	0
195	Eccezionale SdC1	0	0	-3.362	0	200	0	-3.362	0
195	Neve	0	0	-0.471	0	200	0	-0.471	0
195	Eccezionale SdC1	0	0	-3.531	0	200	0	-3.531	0
196	Neve	0	0	-0.448	0	200	0	-0.448	0
196	Eccezionale SdC1	0	0	-3.362	0	200	0	-3.362	0
196	Neve	0	0	0	0	18	0	-0.059	0
196	Eccezionale SdC1	0	0	0	0	18	0	-0.441	0
196	Neve	18	0	-0.059	0	33.7	0	-0.102	0
196	Eccezionale SdC1	18	0	-0.441	0	33.7	0	-0.767	0
196	Neve	33.7	0	-0.102	0	51.8	0	-0.169	0
196	Eccezionale SdC1	33.7	0	-0.767	0	51.8	0	-1.266	0
196	Neve	51.8	0	-0.169	0	91	0	-0.297	0
196	Eccezionale SdC1	51.8	0	-1.266	0	91	0	-2.224	0
196	Neve	91	0	-0.297	0	100	0	-0.337	0
196	Eccezionale SdC1	91	0	-2.224	0	100	0	-2.531	0
196	Neve	100	0	-0.337	0	109	0	-0.297	0
196	Eccezionale SdC1	100	0	-2.531	0	109	0	-2.224	0
196	Neve	109	0	-0.297	0	148.2	0	-0.169	0
196	Eccezionale SdC1	109	0	-2.224	0	148.2	0	-1.266	0
196	Neve	148.2	0	-0.169	0	166.3	0	-0.102	0
196	Eccezionale SdC1	148.2	0	-1.266	0	166.3	0	-0.767	0
196	Neve	166.3	0	-0.102	0	182	0	-0.059	0
196	Eccezionale SdC1	166.3	0	-0.767	0	182	0	-0.441	0
196	Neve	182	0	-0.059	0	200	0	0	0
196	Eccezionale SdC1	182	0	-0.441	0	200	0	0	0
197	Neve	0	0	0	0	18	0	-0.059	0
197	Eccezionale SdC1	0	0	0	0	18	0	-0.441	0
197	Neve	18	0	-0.059	0	33.7	0	-0.102	0
197	Eccezionale SdC1	18	0	-0.441	0	33.7	0	-0.767	0
197	Neve	33.7	0	-0.102	0	51.8	0	-0.169	0
197	Eccezionale SdC1	33.7	0	-0.767	0	51.8	0	-1.266	0
197	Neve	51.8	0	-0.169	0	91	0	-0.297	0
197	Eccezionale SdC1	51.8	0	-1.266	0	91	0	-2.224	0
197	Neve	91	0	-0.297	0	100	0	-0.337	0
197	Eccezionale SdC1	91	0	-2.224	0	100	0	-2.531	0
197	Neve	100	0	-0.337	0	109	0	-0.297	0
197	Eccezionale SdC1	100	0	-2.531	0	109	0	-2.224	0
197	Neve	109	0	-0.297	0	148.2	0	-0.169	0
197	Eccezionale SdC1	109	0	-2.224	0	148.2	0	-1.266	0
197	Neve	148.2	0	-0.169	0	166.3	0	-0.102	0
197	Eccezionale SdC1	148.2	0	-1.266	0	166.3	0	-0.767	0
197	Neve	166.3	0	-0.102	0	182	0	-0.059	0
197	Eccezionale SdC1	166.3	0	-0.767	0	182	0	-0.441	0
197	Neve	182	0	-0.059	0	200	0	0	0
197	Eccezionale SdC1	182	0	-0.441	0	200	0	0	0
197	Neve	0	0	-0.448	0	200	0	-0.448	0
197	Eccezionale SdC1	0	0	-3.362	0	200	0	-3.362	0
198	Neve	0	0	-2.048	0	200	0	-2.048	0
198	Eccezionale SdC1	0	0	-114.617	0	200	0	-114.617	0
198	Neve	0	0	-0.453	0	188	0	-0.471	0
198	Eccezionale SdC1	0	0	-3.394	0	188	0	-3.531	0
198	Neve	188	0	-0.471	0	200	0	-0.471	0
198	Eccezionale SdC1	188	0	-3.531	0	200	0	-3.531	0
199	Neve	0	0	-2.048	0	200	0	-2.048	0
199	Eccezionale SdC1	0	0	-114.617	0	200	0	-114.617	0
199	Neve	0	0	-0.453	0	188	0	-0.471	0
199	Eccezionale SdC1	0	0	-3.394	0	188	0	-3.531	0
199	Neve	188	0	-0.471	0	200	0	-0.471	0
199	Eccezionale SdC1	188	0	-3.531	0	200	0	-3.531	0
200	Neve	0	0	-2.048	0	200	0	-2.048	0
200	Eccezionale SdC1	0	0	-114.617	0	200	0	-114.617	0
200	Neve	0	0	-2.031	0	188	0	-2.048	0
200	Eccezionale SdC1	0	0	-114.49	0	188	0	-114.617	0
200	Neve	188	0	-2.048	0	200	0	-2.048	0
200	Eccezionale SdC1	188	0	-114.617	0	200	0	-114.617	0
201	Eccezione SdC3	0	0	-0.981	0	200	0	-0.981	0
201	Neve	0	0	-0.471	0	200	0	-0.471	0
201	Eccezione SdC3	0	0	-0.934	0	200	0	-0.934	0
201	Neve	0	0	-0.448	0	200	0	-0.448	0
202	Eccezione SdC3	0	0	-0.934	0	200	0	-0.934	0
202	Neve	0	0	-0.448	0	200	0	-0.448	0
202	Eccezione SdC3	0	0	-0.981	0	200	0	-0.981	0
202	Neve	0	0	-0.471	0	200	0	-0.471	0
203	Eccezione SdC3	0	0	-0.934	0	200	0	-0.934	0
203	Neve	0	0	-0.448	0	200	0	-0.448	0
203	Eccezione SdC3	0	0	0	0	18	0	-0.123	0
203	Neve	0	0	0	0	18	0	-0.059	0
203	Eccezione SdC3	18	0	-0.123	0	33.7	0	-0.213	0
203	Neve	18	0	-0.059	0	33.7	0	-0.102	0
203	Eccezione SdC3	33.7	0	-0.213	0	51.8	0	-0.352	0
203	Neve	33.7	0	-0.102	0	51.8	0	-0.169	0
203	Eccezione SdC3	51.8	0	-0.352	0	91	0	-0.618	0
203	Neve	51.8	0	-0.169	0	91	0	-0.297	0
203	Eccezione SdC3	91	0	-0.618	0	100	0	-0.703	0
203	Neve	91	0	-0.297	0	100	0	-0.337	0
203	Eccezione SdC3	100	0	-0.703	0	109	0	-0.618	0
203	Neve	100	0	-0.337	0	109	0	-0.297	0
203	Eccezione SdC3	109	0	-0.618	0	148.2	0	-0.352	0
203	Neve	109	0	-0.297	0	148.2	0	-0.169	0
203	Eccezione SdC3	148.2	0	-0.352	0	166.3	0	-0.213	0
203	Neve	148.2	0	-0.169	0	166.3	0	-0.102	0
203	Eccezione SdC3	166.3	0	-0.213	0	182	0	-0.123	0
203	Neve	166.3	0	-0.102	0	182	0	-0.059	0
203	Eccezione SdC3	182	0	-0.123	0	200	0	0	0
203	Neve	182	0	-0.059	0	200	0	0	0

Indice asta	Condizione	Posizione iniziale	F1 iniziale	F2 iniziale	F3 iniziale	Posizione finale	F1 finale	F2 finale	F3 finale
204	Eccezione SdC3	0	0	0	0	18	0	-0.123	0
204	Neve	0	0	0	0	18	0	-0.059	0
204	Eccezione SdC3	18	0	-0.123	0	33.7	0	-0.213	0
204	Neve	18	0	-0.059	0	33.7	0	-0.102	0
204	Eccezione SdC3	33.7	0	-0.213	0	51.8	0	-0.352	0
204	Neve	33.7	0	-0.102	0	51.8	0	-0.169	0
204	Eccezione SdC3	51.8	0	-0.352	0	91	0	-0.618	0
204	Neve	51.8	0	-0.169	0	91	0	-0.297	0
204	Eccezione SdC3	91	0	-0.618	0	100	0	-0.703	0
204	Neve	91	0	-0.297	0	100	0	-0.337	0
204	Eccezione SdC3	100	0	-0.703	0	109	0	-0.618	0
204	Neve	100	0	-0.337	0	109	0	-0.297	0
204	Eccezione SdC3	109	0	-0.618	0	148.2	0	-0.352	0
204	Neve	109	0	-0.297	0	148.2	0	-0.169	0
204	Eccezione SdC3	148.2	0	-0.352	0	166.3	0	-0.213	0
204	Neve	148.2	0	-0.169	0	166.3	0	-0.102	0
204	Eccezione SdC3	166.3	0	-0.213	0	182	0	-0.123	0
204	Neve	166.3	0	-0.102	0	182	0	-0.059	0
204	Eccezione SdC3	182	0	-0.123	0	200	0	0	0
204	Neve	182	0	-0.059	0	200	0	0	0
204	Eccezione SdC3	0	0	-0.934	0	200	0	-0.934	0
204	Neve	0	0	-0.448	0	200	0	-0.448	0
205	Eccezione SdC3	0	0	-2.133	0	200	0	-2.133	0
205	Neve	0	0	-2.048	0	200	0	-2.048	0
205	Eccezionale SdC1	0	0	-71.3	0	200	0	-71.3	0
205	Eccezione SdC3	0	0	-0.943	0	188	0	-0.981	0
205	Neve	0	0	-0.453	0	188	0	-0.471	0
205	Eccezione SdC3	188	0	-0.981	0	200	0	-0.981	0
205	Neve	188	0	-0.471	0	200	0	-0.471	0
206	Neve	0	0	-1.024	0	200	0	-1.024	0
206	Eccezionale SdC1	0	0	-71.3	0	200	0	-71.3	0
206	Eccezione SdC3	0	0	-0.943	0	188	0	-0.981	0
206	Neve	0	0	-0.453	0	188	0	-0.471	0
206	Eccezione SdC3	188	0	-0.981	0	200	0	-0.981	0
206	Neve	188	0	-0.471	0	200	0	-0.471	0
207	Neve	0	0	-1.024	0	200	0	-1.024	0
207	Eccezionale SdC1	0	0	-71.3	0	200	0	-71.3	0
207	Eccezione SdC3	0	0	-2.098	0	188	0	-2.133	0
207	Neve	0	0	-2.031	0	188	0	-2.048	0
207	Eccezionale SdC1	0	0	-71.3	0	188	0	-71.3	0
207	Eccezione SdC3	188	0	-2.133	0	200	0	-2.133	0
207	Neve	188	0	-2.048	0	200	0	-2.048	0
207	Eccezionale SdC1	188	0	-71.3	0	200	0	-71.3	0
208	Eccezione SdC3	0	0	-0.981	0	200	0	-0.981	0
208	Neve	0	0	-0.471	0	200	0	-0.471	0
208	Eccezione SdC3	0	0	-0.934	0	200	0	-0.934	0
208	Neve	0	0	-0.448	0	200	0	-0.448	0
209	Eccezione SdC3	0	0	-0.934	0	200	0	-0.934	0
209	Neve	0	0	-0.448	0	200	0	-0.448	0
209	Eccezione SdC3	0	0	-0.981	0	200	0	-0.981	0
209	Neve	0	0	-0.471	0	200	0	-0.471	0
210	Eccezione SdC3	0	0	-0.934	0	200	0	-0.934	0
210	Neve	0	0	-0.448	0	200	0	-0.448	0
210	Eccezione SdC3	0	0	0	0	18	0	-0.123	0
210	Neve	0	0	0	0	18	0	-0.059	0
210	Eccezione SdC3	18	0	-0.123	0	33.7	0	-0.213	0
210	Neve	18	0	-0.059	0	33.7	0	-0.102	0
210	Eccezione SdC3	33.7	0	-0.213	0	51.8	0	-0.352	0
210	Neve	33.7	0	-0.102	0	51.8	0	-0.169	0
210	Eccezione SdC3	51.8	0	-0.352	0	91	0	-0.618	0
210	Neve	51.8	0	-0.169	0	91	0	-0.297	0
210	Eccezione SdC3	91	0	-0.618	0	100	0	-0.703	0
210	Neve	91	0	-0.297	0	100	0	-0.337	0
210	Eccezione SdC3	100	0	-0.703	0	109	0	-0.618	0
210	Neve	100	0	-0.337	0	109	0	-0.297	0
210	Eccezione SdC3	109	0	-0.618	0	148.2	0	-0.352	0
210	Neve	109	0	-0.297	0	148.2	0	-0.169	0
210	Eccezione SdC3	148.2	0	-0.352	0	166.3	0	-0.213	0
210	Neve	148.2	0	-0.169	0	166.3	0	-0.102	0
210	Eccezione SdC3	166.3	0	-0.213	0	182	0	-0.123	0
210	Neve	166.3	0	-0.102	0	182	0	-0.059	0
210	Eccezione SdC3	182	0	-0.123	0	200	0	0	0
210	Neve	182	0	-0.059	0	200	0	0	0
211	Eccezione SdC3	0	0	0	0	18	0	-0.123	0
211	Neve	0	0	0	0	18	0	-0.059	0
211	Eccezione SdC3	18	0	-0.123	0	33.7	0	-0.213	0
211	Neve	18	0	-0.059	0	33.7	0	-0.102	0
211	Eccezione SdC3	33.7	0	-0.213	0	51.8	0	-0.352	0
211	Neve	33.7	0	-0.102	0	51.8	0	-0.169	0
211	Eccezione SdC3	51.8	0	-0.352	0	91	0	-0.618	0
211	Neve	51.8	0	-0.169	0	91	0	-0.297	0
211	Eccezione SdC3	91	0	-0.618	0	100	0	-0.703	0
211	Neve	91	0	-0.297	0	100	0	-0.337	0
211	Eccezione SdC3	100	0	-0.703	0	109	0	-0.618	0
211	Neve	100	0	-0.337	0	109	0	-0.297	0
211	Eccezione SdC3	109	0	-0.618	0	148.2	0	-0.352	0
211	Neve	109	0	-0.297	0	148.2	0	-0.169	0
211	Eccezione SdC3	148.2	0	-0.352	0	166.3	0	-0.213	0
211	Neve	148.2	0	-0.169	0	166.3	0	-0.102	0
211	Eccezione SdC3	166.3	0	-0.213	0	182	0	-0.123	0
211	Neve	166.3	0	-0.102	0	182	0	-0.059	0
211	Eccezione SdC3	182	0	-0.123	0	200	0	0	0
211	Neve	182	0	-0.059	0	200	0	0	0
211	Eccezione SdC3	0	0	-0.934	0	200	0	-0.934	0
211	Neve	0	0	-0.448	0	200	0	-0.448	0
212	Neve	0	0	-1.024	0	200	0	-1.024	0

Indice asta	Condizione	Posizione iniziale	F1 iniziale	F2 iniziale	F3 iniziale	Posizione finale	F1 finale	F2 finale	F3 finale
212	Eccezionale SdC1	0	0	-71.3	0	200	0	-71.3	0
212	Eccezione SdC3	0	0	-0.943	0	188	0	-0.981	0
212	Neve	0	0	-0.453	0	188	0	-0.471	0
212	Eccezione SdC3	188	0	-0.981	0	200	0	-0.981	0
212	Neve	188	0	-0.471	0	200	0	-0.471	0
213	Neve	0	0	-1.024	0	200	0	-1.024	0
213	Eccezionale SdC1	0	0	-71.3	0	200	0	-71.3	0
213	Eccezione SdC3	0	0	-0.943	0	188	0	-0.981	0
213	Neve	0	0	-0.453	0	188	0	-0.471	0
213	Eccezione SdC3	188	0	-0.981	0	200	0	-0.981	0
213	Neve	188	0	-0.471	0	200	0	-0.471	0
214	Neve	0	0	-1.024	0	200	0	-1.024	0
214	Eccezionale SdC1	0	0	-71.3	0	200	0	-71.3	0
214	Neve	0	0	-1.024	0	200	0	-1.024	0
214	Eccezionale SdC1	0	0	-71.3	0	200	0	-71.3	0
215	Eccezione SdC3	0	0	-0.981	0	200	0	-0.981	0
215	Neve	0	0	-0.471	0	200	0	-0.471	0
215	Eccezione SdC3	0	0	-0.934	0	200	0	-0.934	0
215	Neve	0	0	-0.448	0	200	0	-0.448	0
216	Eccezione SdC3	0	0	-0.934	0	200	0	-0.934	0
216	Neve	0	0	-0.448	0	200	0	-0.448	0
216	Eccezione SdC3	0	0	-0.981	0	200	0	-0.981	0
216	Neve	0	0	-0.471	0	200	0	-0.471	0
217	Eccezione SdC3	0	0	-0.934	0	200	0	-0.934	0
217	Neve	0	0	-0.448	0	200	0	-0.448	0
217	Eccezione SdC3	0	0	0	0	19.6	0	-0.133	0
217	Neve	0	0	0	0	19.6	0	-0.064	0
217	Eccezione SdC3	19.6	0	-0.133	0	37.6	0	-0.266	0
217	Neve	19.6	0	-0.064	0	37.6	0	-0.128	0
217	Eccezione SdC3	37.6	0	-0.266	0	55.7	0	-0.378	0
217	Neve	37.6	0	-0.128	0	55.7	0	-0.182	0
217	Eccezione SdC3	55.7	0	-0.378	0	82	0	-0.511	0
217	Neve	55.7	0	-0.182	0	82	0	-0.245	0
217	Eccezione SdC3	82	0	-0.511	0	91	0	-0.618	0
217	Neve	82	0	-0.245	0	91	0	-0.297	0
217	Eccezione SdC3	91	0	-0.618	0	100	0	-0.679	0
217	Neve	91	0	-0.297	0	100	0	-0.326	0
217	Eccezione SdC3	100	0	-0.679	0	109	0	-0.618	0
217	Neve	100	0	-0.326	0	109	0	-0.297	0
217	Eccezione SdC3	109	0	-0.618	0	118	0	-0.511	0
217	Neve	109	0	-0.297	0	118	0	-0.245	0
217	Eccezione SdC3	118	0	-0.511	0	144.3	0	-0.378	0
217	Neve	118	0	-0.245	0	144.3	0	-0.182	0
217	Eccezione SdC3	144.3	0	-0.378	0	162.4	0	-0.266	0
217	Neve	144.3	0	-0.182	0	162.4	0	-0.128	0
217	Eccezione SdC3	162.4	0	-0.266	0	182	0	-0.123	0
217	Neve	162.4	0	-0.128	0	182	0	-0.059	0
217	Eccezione SdC3	182	0	-0.123	0	191	0	0	0
217	Neve	182	0	-0.059	0	191	0	0	0
218	Eccezione SdC3	0	0	-2.133	0	200	0	-2.133	0
218	Neve	0	0	-1.024	0	200	0	-1.024	0
218	Eccezione SdC3	0	0	-0.981	0	12	0	-0.981	0
218	Neve	0	0	-0.471	0	12	0	-0.471	0
218	Eccezione SdC3	12	0	-0.981	0	200	0	-0.943	0
218	Neve	12	0	-0.471	0	200	0	-0.453	0
219	Eccezione SdC3	0	0	-2.133	0	200	0	-2.133	0
219	Neve	0	0	-1.024	0	200	0	-1.024	0
219	Eccezione SdC3	0	0	-0.981	0	200	0	-0.981	0
219	Neve	0	0	-0.471	0	200	0	-0.471	0
220	Eccezione SdC3	0	0	-2.133	0	200	0	-2.133	0
220	Neve	0	0	-1.024	0	200	0	-1.024	0
220	Eccezione SdC3	0	0	-2.133	0	200	0	-2.133	0
220	Neve	0	0	-1.024	0	200	0	-1.024	0
221	Eccezione SdC3	0	0	-0.981	0	200	0	-0.981	0
221	Neve	0	0	-0.471	0	200	0	-0.471	0
221	Eccezione SdC3	0	0	-0.934	0	200	0	-0.934	0
221	Neve	0	0	-0.448	0	200	0	-0.448	0
222	Eccezione SdC3	0	0	-0.934	0	200	0	-0.934	0
222	Neve	0	0	-0.448	0	200	0	-0.448	0
222	Eccezione SdC3	0	0	-0.981	0	200	0	-0.981	0
222	Neve	0	0	-0.471	0	200	0	-0.471	0
223	Eccezione SdC3	0	0	-0.934	0	200	0	-0.934	0
223	Neve	0	0	-0.448	0	200	0	-0.448	0
223	Eccezione SdC3	0	0	0	0	9	0	-0.122	0
223	Neve	0	0	0	0	9	0	-0.059	0
223	Eccezione SdC3	9	0	-0.122	0	18	0	-0.123	0
223	Neve	9	0	-0.059	0	18	0	-0.059	0
223	Eccezione SdC3	18	0	-0.123	0	37.6	0	-0.266	0
223	Neve	18	0	-0.059	0	37.6	0	-0.128	0
223	Eccezione SdC3	37.6	0	-0.266	0	55.7	0	-0.378	0
223	Neve	37.6	0	-0.128	0	55.7	0	-0.182	0
223	Eccezione SdC3	55.7	0	-0.378	0	82	0	-0.511	0
223	Neve	55.7	0	-0.182	0	82	0	-0.245	0
223	Eccezione SdC3	82	0	-0.511	0	91	0	-0.618	0
223	Neve	82	0	-0.245	0	91	0	-0.297	0
223	Eccezione SdC3	91	0	-0.618	0	100	0	-0.679	0
223	Neve	91	0	-0.297	0	100	0	-0.326	0
223	Eccezione SdC3	100	0	-0.679	0	109	0	-0.618	0
223	Neve	100	0	-0.326	0	109	0	-0.297	0
223	Eccezione SdC3	109	0	-0.618	0	118	0	-0.511	0
223	Neve	109	0	-0.297	0	118	0	-0.245	0
223	Eccezione SdC3	118	0	-0.511	0	144.3	0	-0.378	0
223	Neve	118	0	-0.245	0	144.3	0	-0.182	0
223	Eccezione SdC3	144.3	0	-0.378	0	162.4	0	-0.266	0
223	Neve	144.3	0	-0.182	0	162.4	0	-0.128	0
223	Eccezione SdC3	162.4	0	-0.266	0	182	0	-0.123	0

Indice asta	Condizione	Posizione iniziale	F1 iniziale	F2 iniziale	F3 iniziale	Posizione finale	F1 finale	F2 finale	F3 finale
223	Neve	162.4	0	-0.128	0	182	0	-0.059	0
223	Eccezione SdC3	182	0	-0.123	0	191	0	0	0
223	Neve	182	0	-0.059	0	191	0	0	0
223	Eccezione SdC3	191	0	-0.122	0	200	0	0	0
223	Neve	191	0	-0.059	0	200	0	0	0
224	Eccezione SdC3	0	0	-19.952	0	200	0	-19.952	0
224	Neve	0	0	-2.048	0	200	0	-2.048	0
224	Eccezione SdC3	0	0	-0.981	0	200	0	-0.943	0
224	Neve	0	0	-0.471	0	200	0	-0.453	0
225	Eccezione SdC3	0	0	-19.952	0	200	0	-19.952	0
225	Neve	0	0	-2.048	0	200	0	-2.048	0
225	Eccezione SdC3	0	0	-0.981	0	200	0	-0.981	0
225	Neve	0	0	-0.471	0	200	0	-0.471	0
226	Eccezione SdC3	0	0	-19.952	0	200	0	-19.952	0
226	Neve	0	0	-2.048	0	200	0	-2.048	0
226	Eccezione SdC3	0	0	-19.952	0	200	0	-19.952	0
226	Neve	0	0	-2.048	0	200	0	-2.048	0
227	Eccezione SdC3	0	0	-0.981	0	200	0	-0.981	0
227	Neve	0	0	-0.471	0	200	0	-0.471	0
227	Eccezione SdC3	0	0	-0.934	0	200	0	-0.934	0
227	Neve	0	0	-0.448	0	200	0	-0.448	0
228	Eccezione SdC3	0	0	-0.934	0	200	0	-0.934	0
228	Neve	0	0	-0.448	0	200	0	-0.448	0
228	Eccezione SdC3	0	0	-0.981	0	200	0	-0.981	0
228	Neve	0	0	-0.471	0	200	0	-0.471	0
229	Eccezione SdC3	0	0	-0.934	0	200	0	-0.934	0
229	Neve	0	0	-0.448	0	200	0	-0.448	0
229	Eccezione SdC3	9	0	-0.122	0	18	0	-0.123	0
229	Neve	9	0	-0.059	0	18	0	-0.059	0
229	Eccezione SdC3	18	0	-0.123	0	37.6	0	-0.266	0
229	Neve	18	0	-0.059	0	37.6	0	-0.128	0
229	Eccezione SdC3	37.6	0	-0.266	0	55.7	0	-0.378	0
229	Neve	37.6	0	-0.128	0	55.7	0	-0.182	0
229	Eccezione SdC3	55.7	0	-0.378	0	82	0	-0.511	0
229	Neve	55.7	0	-0.182	0	82	0	-0.245	0
229	Eccezione SdC3	82	0	-0.511	0	91	0	-0.618	0
229	Neve	82	0	-0.245	0	91	0	-0.297	0
229	Eccezione SdC3	91	0	-0.618	0	100	0	-0.679	0
229	Neve	91	0	-0.297	0	100	0	-0.326	0
229	Eccezione SdC3	100	0	-0.679	0	109	0	-0.618	0
229	Neve	100	0	-0.326	0	109	0	-0.297	0
229	Eccezione SdC3	109	0	-0.618	0	118	0	-0.511	0
229	Neve	109	0	-0.297	0	118	0	-0.245	0
229	Eccezione SdC3	118	0	-0.511	0	144.3	0	-0.378	0
229	Neve	118	0	-0.245	0	144.3	0	-0.182	0
229	Eccezione SdC3	144.3	0	-0.378	0	162.4	0	-0.266	0
229	Neve	144.3	0	-0.182	0	162.4	0	-0.128	0
229	Eccezione SdC3	162.4	0	-0.266	0	182	0	-0.123	0
229	Neve	162.4	0	-0.128	0	182	0	-0.059	0
229	Eccezione SdC3	182	0	-0.123	0	191	0	0	0
229	Neve	182	0	-0.059	0	191	0	0	0
230	Eccezione SdC3	0	0	-19.952	0	200	0	-19.952	0
230	Neve	0	0	-2.048	0	200	0	-2.048	0
230	Eccezione SdC3	0	0	-0.981	0	200	0	-0.943	0
230	Neve	0	0	-0.471	0	200	0	-0.453	0
231	Eccezione SdC3	0	0	-19.952	0	200	0	-19.952	0
231	Neve	0	0	-2.048	0	200	0	-2.048	0
231	Eccezione SdC3	0	0	-0.981	0	200	0	-0.981	0
231	Neve	0	0	-0.471	0	200	0	-0.471	0
232	Eccezione SdC3	0	0	-19.952	0	200	0	-19.952	0
232	Neve	0	0	-2.048	0	200	0	-2.048	0
232	Eccezione SdC3	0	0	-19.952	0	200	0	-19.952	0
232	Neve	0	0	-2.048	0	200	0	-2.048	0
233	Eccezione SdC3	0	0	0	0	19.6	0	-0.133	0
233	Neve	0	0	0	0	19.6	0	-0.064	0
233	Eccezione SdC3	19.6	0	-0.133	0	37.6	0	-0.266	0
233	Neve	19.6	0	-0.064	0	37.6	0	-0.128	0
233	Eccezione SdC3	37.6	0	-0.266	0	55.7	0	-0.378	0
233	Neve	37.6	0	-0.128	0	55.7	0	-0.182	0
233	Eccezione SdC3	55.7	0	-0.378	0	82	0	-0.511	0
233	Neve	55.7	0	-0.182	0	82	0	-0.245	0
233	Eccezione SdC3	82	0	-0.511	0	91	0	-0.618	0
233	Neve	82	0	-0.245	0	91	0	-0.297	0
233	Eccezione SdC3	91	0	-0.618	0	100	0	-0.679	0
233	Neve	91	0	-0.297	0	100	0	-0.326	0
233	Eccezione SdC3	100	0	-0.679	0	109	0	-0.618	0
233	Neve	100	0	-0.326	0	109	0	-0.297	0
233	Eccezione SdC3	109	0	-0.618	0	118	0	-0.511	0
233	Neve	109	0	-0.297	0	118	0	-0.245	0
233	Eccezione SdC3	118	0	-0.511	0	144.3	0	-0.378	0
233	Neve	118	0	-0.245	0	144.3	0	-0.182	0
233	Eccezione SdC3	144.3	0	-0.378	0	162.4	0	-0.266	0
233	Neve	144.3	0	-0.182	0	162.4	0	-0.128	0
233	Eccezione SdC3	162.4	0	-0.266	0	182	0	-0.123	0
233	Neve	162.4	0	-0.128	0	182	0	-0.059	0
233	Eccezione SdC3	182	0	-0.123	0	191	0	-0.122	0
233	Neve	182	0	-0.059	0	191	0	-0.059	0
233	Eccezione SdC3	191	0	-0.122	0	200	0	0	0
233	Neve	191	0	-0.059	0	200	0	0	0
233	Eccezione SdC3	0	0	-0.934	0	200	0	-0.934	0
233	Neve	0	0	-0.448	0	200	0	-0.448	0
234	Eccezione SdC3	0	0	0	0	9	0	-0.122	0
234	Neve	0	0	0	0	9	0	-0.059	0
234	Eccezione SdC3	9	0	-0.122	0	18	0	-0.123	0
234	Neve	9	0	-0.059	0	18	0	-0.059	0
234	Eccezione SdC3	18	0	-0.123	0	37.6	0	-0.266	0

Indice asta	Condizione	Posizione iniziale	F1 iniziale	F2 iniziale	F3 iniziale	Posizione finale	F1 finale	F2 finale	F3 finale
234	Neve	18	0	-0.059	0	37.6	0	-0.128	0
234	Eccezione SdC3	37.6	0	-0.266	0	55.7	0	-0.378	0
234	Neve	37.6	0	-0.128	0	55.7	0	-0.182	0
234	Eccezione SdC3	55.7	0	-0.378	0	82	0	-0.511	0
234	Neve	55.7	0	-0.182	0	82	0	-0.245	0
234	Eccezione SdC3	82	0	-0.511	0	91	0	-0.618	0
234	Neve	82	0	-0.245	0	91	0	-0.297	0
234	Eccezione SdC3	91	0	-0.618	0	100	0	-0.679	0
234	Neve	91	0	-0.297	0	100	0	-0.326	0
234	Eccezione SdC3	100	0	-0.679	0	109	0	-0.618	0
234	Neve	100	0	-0.326	0	109	0	-0.297	0
234	Eccezione SdC3	109	0	-0.618	0	118	0	-0.511	0
234	Neve	109	0	-0.297	0	118	0	-0.245	0
234	Eccezione SdC3	118	0	-0.511	0	144.3	0	-0.378	0
234	Neve	118	0	-0.245	0	144.3	0	-0.182	0
234	Eccezione SdC3	144.3	0	-0.378	0	162.4	0	-0.266	0
234	Neve	144.3	0	-0.182	0	162.4	0	-0.128	0
234	Eccezione SdC3	162.4	0	-0.266	0	182	0	-0.123	0
234	Neve	162.4	0	-0.128	0	182	0	-0.059	0
234	Eccezione SdC3	182	0	-0.123	0	191	0	-0.122	0
234	Neve	182	0	-0.059	0	191	0	-0.059	0
234	Eccezione SdC3	191	0	-0.122	0	200	0	0	0
234	Neve	191	0	-0.059	0	200	0	0	0
234	Eccezione SdC3	0	0	-0.934	0	200	0	-0.934	0
234	Neve	0	0	-0.448	0	200	0	-0.448	0
235	Eccezione SdC3	0	0	0	0	9	0	-0.122	0
235	Neve	0	0	0	0	9	0	-0.059	0
235	Eccezione SdC3	9	0	-0.122	0	18	0	-0.123	0
235	Neve	9	0	-0.059	0	18	0	-0.059	0
235	Eccezione SdC3	18	0	-0.123	0	37.6	0	-0.266	0
235	Neve	18	0	-0.059	0	37.6	0	-0.128	0
235	Eccezione SdC3	37.6	0	-0.266	0	55.7	0	-0.378	0
235	Neve	37.6	0	-0.128	0	55.7	0	-0.182	0
235	Eccezione SdC3	55.7	0	-0.378	0	82	0	-0.511	0
235	Neve	55.7	0	-0.182	0	82	0	-0.245	0
235	Eccezione SdC3	82	0	-0.511	0	91	0	-0.618	0
235	Neve	82	0	-0.245	0	91	0	-0.297	0
235	Eccezione SdC3	91	0	-0.618	0	100	0	-0.679	0
235	Neve	91	0	-0.297	0	100	0	-0.326	0
235	Eccezione SdC3	0	0	-0.934	0	100	0	-0.934	0
235	Neve	0	0	-0.448	0	100	0	-0.448	0
246	Eccezione SdC3	0	0	-0.679	0	9	0	-0.618	0
246	Neve	0	0	-0.326	0	9	0	-0.297	0
246	Eccezione SdC3	9	0	-0.618	0	18	0	-0.511	0
246	Neve	9	0	-0.297	0	18	0	-0.245	0
246	Eccezione SdC3	18	0	-0.511	0	44.3	0	-0.378	0
246	Neve	18	0	-0.245	0	44.3	0	-0.182	0
246	Eccezione SdC3	44.3	0	-0.378	0	62.4	0	-0.266	0
246	Neve	44.3	0	-0.182	0	62.4	0	-0.128	0
246	Eccezione SdC3	62.4	0	-0.266	0	82	0	-0.123	0
246	Neve	62.4	0	-0.128	0	82	0	-0.059	0
246	Eccezione SdC3	82	0	-0.123	0	91	0	0	0
246	Neve	82	0	-0.059	0	91	0	0	0
246	Eccezione SdC3	91	0	-0.122	0	100	0	0	0
246	Neve	91	0	-0.059	0	100	0	0	0
246	Eccezione SdC3	0	0	-0.934	0	100	0	-0.934	0
246	Neve	0	0	-0.448	0	100	0	-0.448	0
247	Eccezione SdC3	0	-0.524	-1.072	0	12.3	-0.524	-1.072	0
247	Neve	0	-0.252	-0.515	0	12.3	-0.252	-0.515	0
247	Eccezione SdC3	12.3	-0.524	-1.072	0	14.1	-0.516	-1.055	0
247	Neve	12.3	-0.252	-0.515	0	14.1	-0.248	-0.507	0
247	Eccezione SdC3	14.1	-0.516	-1.055	0	34.6	-0.524	-1.072	0
247	Neve	14.1	-0.248	-0.507	0	34.6	-0.252	-0.515	0
247	Eccezione SdC3	34.6	-0.524	-1.072	0	105.6	-0.524	-1.072	0
247	Neve	34.6	-0.252	-0.515	0	105.6	-0.252	-0.515	0
247	Eccezione SdC3	105.6	-0.262	-0.536	0	115.9	-0.286	-0.584	0
247	Neve	105.6	-0.126	-0.257	0	115.9	-0.137	-0.281	0
247	Eccezione SdC3	115.9	-0.286	-0.584	0	126.1	-0.327	-0.668	0
247	Neve	115.9	-0.137	-0.281	0	126.1	-0.157	-0.321	0
247	Eccezione SdC3	126.1	-0.327	-0.668	0	156	-0.378	-0.774	0
247	Neve	126.1	-0.157	-0.321	0	156	-0.182	-0.371	0
247	Eccezione SdC3	156	-0.378	-0.774	0	176.6	-0.422	-0.862	0
247	Neve	156	-0.182	-0.371	0	176.6	-0.202	-0.414	0
247	Eccezione SdC3	176.6	-0.422	-0.862	0	198.9	-0.477	-0.975	0
247	Neve	176.6	-0.202	-0.414	0	198.9	-0.229	-0.468	0
247	Eccezione SdC3	198.9	-0.477	-0.975	0	209.2	-0.524	-1.072	0
247	Neve	198.9	-0.229	-0.468	0	209.2	-0.252	-0.515	0
247	Eccezione SdC3	209.2	-0.524	-1.072	0	219.4	-0.524	-1.072	0
247	Neve	209.2	-0.252	-0.515	0	219.4	-0.252	-0.515	0
248	Eccezione SdC3	0	-0.524	1.072	0	12.3	-0.524	1.072	0
248	Neve	0	-0.252	0.515	0	12.3	-0.252	0.515	0
248	Eccezione SdC3	12.3	-0.524	1.072	0	14.1	-0.516	1.055	0
248	Neve	12.3	-0.252	0.515	0	14.1	-0.248	0.507	0
248	Eccezione SdC3	14.1	-0.516	1.055	0	34.6	-0.524	1.072	0
248	Neve	14.1	-0.248	0.507	0	34.6	-0.252	0.515	0
248	Eccezione SdC3	34.6	-0.524	1.072	0	105.6	-0.524	1.072	0
248	Neve	34.6	-0.252	0.515	0	105.6	-0.252	0.515	0
248	Eccezione SdC3	105.6	-0.262	0.536	0	115.9	-0.286	0.584	0
248	Neve	105.6	-0.126	0.257	0	115.9	-0.137	0.281	0
248	Eccezione SdC3	115.9	-0.286	0.584	0	126.1	-0.327	0.668	0
248	Neve	115.9	-0.137	0.281	0	126.1	-0.157	0.321	0
248	Eccezione SdC3	126.1	-0.327	0.668	0	156	-0.378	0.774	0
248	Neve	126.1	-0.157	0.321	0	156	-0.182	0.371	0
248	Eccezione SdC3	156	-0.378	0.774	0	176.6	-0.422	0.862	0
248	Neve	156	-0.182	0.371	0	176.6	-0.202	0.414	0
248	Eccezione SdC3	176.6	-0.422	0.862	0	198.9	-0.477	0.975	0

Indice asta	Condizione	Posizione iniziale	F1 iniziale	F2 iniziale	F3 iniziale	Posizione finale	F1 finale	F2 finale	F3 finale
248	Neve	176.6	-0.202	0.414	0	198.9	-0.229	0.468	0
248	Eccezione SdC3	198.9	-0.477	0.975	0	209.2	-0.477	0.976	0
248	Neve	198.9	-0.229	0.468	0	209.2	-0.229	0.468	0
248	Eccezione SdC3	209.2	-0.524	1.072	0	219.4	-0.524	1.072	0
248	Neve	209.2	-0.252	0.515	0	219.4	-0.252	0.515	0
249	Eccezione SdC3	0	-0.524	-1.072	0	12.3	-0.524	-1.072	0
249	Neve	0	-0.252	-0.515	0	12.3	-0.252	-0.515	0
249	Eccezione SdC3	12.3	-0.524	-1.072	0	14.1	-0.516	-1.055	0
249	Neve	12.3	-0.252	-0.515	0	14.1	-0.248	-0.507	0
249	Eccezione SdC3	14.1	-0.516	-1.055	0	34.6	-0.524	-1.072	0
249	Neve	14.1	-0.248	-0.507	0	34.6	-0.252	-0.515	0
249	Eccezione SdC3	34.6	-0.524	-1.072	0	105.6	-0.524	-1.072	0
249	Neve	34.6	-0.252	-0.515	0	105.6	-0.252	-0.515	0
249	Eccezione SdC3	105.6	-0.262	-0.536	0	115.9	-0.286	-0.584	0
249	Neve	105.6	-0.126	-0.257	0	115.9	-0.137	-0.281	0
249	Eccezione SdC3	115.9	-0.286	-0.584	0	126.1	-0.327	-0.668	0
249	Neve	115.9	-0.137	-0.281	0	126.1	-0.157	-0.321	0
249	Eccezione SdC3	126.1	-0.327	-0.668	0	156	-0.378	-0.774	0
249	Neve	126.1	-0.157	-0.321	0	156	-0.182	-0.371	0
249	Eccezione SdC3	156	-0.378	-0.774	0	176.6	-0.422	-0.862	0
249	Neve	156	-0.182	-0.371	0	176.6	-0.202	-0.414	0
249	Eccezione SdC3	176.6	-0.422	-0.862	0	198.9	-0.477	-0.975	0
249	Neve	176.6	-0.202	-0.414	0	198.9	-0.229	-0.468	0
249	Eccezione SdC3	198.9	-0.477	-0.975	0	209.2	-0.524	-1.072	0
249	Neve	198.9	-0.229	-0.468	0	209.2	-0.252	-0.515	0
249	Eccezione SdC3	209.2	-0.047	-0.096	0	219.4	0	0	0
249	Neve	209.2	-0.023	-0.046	0	219.4	0	0	0
250	Eccezione SdC3	0	-0.524	1.072	0	12.3	-0.524	1.072	0
250	Neve	0	-0.252	0.515	0	12.3	-0.252	0.515	0
250	Eccezione SdC3	12.3	-0.524	1.072	0	14.1	-0.516	1.055	0
250	Neve	12.3	-0.252	0.515	0	14.1	-0.248	0.507	0
250	Eccezione SdC3	14.1	-0.516	1.055	0	34.6	-0.524	1.072	0
250	Neve	14.1	-0.248	0.507	0	34.6	-0.252	0.515	0
250	Eccezione SdC3	34.6	-0.524	1.072	0	105.6	-0.524	1.072	0
250	Neve	34.6	-0.252	0.515	0	105.6	-0.252	0.515	0
250	Eccezione SdC3	105.6	-0.262	0.536	0	115.9	-0.286	0.584	0
250	Neve	105.6	-0.126	0.257	0	115.9	-0.137	0.281	0
250	Eccezione SdC3	115.9	-0.286	0.584	0	126.1	-0.327	0.668	0
250	Neve	115.9	-0.137	0.281	0	126.1	-0.157	0.321	0
250	Eccezione SdC3	126.1	-0.327	0.668	0	156	-0.378	0.774	0
250	Neve	126.1	-0.157	0.321	0	156	-0.182	0.371	0
250	Eccezione SdC3	156	-0.378	0.774	0	176.6	-0.422	0.862	0
250	Neve	156	-0.182	0.371	0	176.6	-0.202	0.414	0
250	Eccezione SdC3	176.6	-0.422	0.862	0	198.9	-0.477	0.975	0
250	Neve	176.6	-0.202	0.414	0	198.9	-0.229	0.468	0
250	Eccezione SdC3	198.9	-0.477	0.975	0	209.2	-0.477	0.976	0
250	Neve	198.9	-0.229	0.468	0	209.2	-0.229	0.468	0
250	Eccezione SdC3	209.2	-0.047	0.096	0	219.4	0	0	0
250	Neve	209.2	-0.023	0.046	0	219.4	0	0	0
251	Eccezione SdC3	0	-0.524	-1.072	0	12.3	-0.524	-1.072	0
251	Neve	0	-0.252	-0.515	0	12.3	-0.252	-0.515	0
251	Eccezione SdC3	12.3	-0.524	-1.072	0	14.1	-0.516	-1.055	0
251	Neve	12.3	-0.252	-0.515	0	14.1	-0.248	-0.507	0
251	Eccezione SdC3	14.1	-0.516	-1.055	0	34.6	-0.524	-1.072	0
251	Neve	14.1	-0.248	-0.507	0	34.6	-0.252	-0.515	0
251	Eccezione SdC3	34.6	-0.524	-1.072	0	105.6	-0.524	-1.072	0
251	Neve	34.6	-0.252	-0.515	0	105.6	-0.252	-0.515	0
251	Eccezione SdC3	105.6	-0.262	-0.536	0	115.9	-0.286	-0.584	0
251	Neve	105.6	-0.126	-0.257	0	115.9	-0.137	-0.281	0
251	Eccezione SdC3	115.9	-0.286	-0.584	0	126.1	-0.327	-0.668	0
251	Neve	115.9	-0.137	-0.281	0	126.1	-0.157	-0.321	0
251	Eccezione SdC3	126.1	-0.327	-0.668	0	156	-0.378	-0.774	0
251	Neve	126.1	-0.157	-0.321	0	156	-0.182	-0.371	0
251	Eccezione SdC3	156	-0.378	-0.774	0	176.6	-0.422	-0.862	0
251	Neve	156	-0.182	-0.371	0	176.6	-0.202	-0.414	0
251	Eccezione SdC3	176.6	-0.422	-0.862	0	198.9	-0.477	-0.975	0
251	Neve	176.6	-0.202	-0.414	0	198.9	-0.229	-0.468	0
251	Eccezione SdC3	198.9	-0.477	-0.975	0	209.2	-0.524	-1.072	0
251	Neve	198.9	-0.229	-0.468	0	209.2	-0.252	-0.515	0
251	Eccezione SdC3	209.2	-0.524	-1.072	0	219.4	-0.524	-1.072	0
251	Neve	209.2	-0.252	-0.515	0	219.4	-0.252	-0.515	0
252	Eccezione SdC3	0	-0.524	1.072	0	12.3	-0.524	1.072	0
252	Neve	0	-0.252	0.515	0	12.3	-0.252	0.515	0
252	Eccezione SdC3	12.3	-0.524	1.072	0	14.1	-0.516	1.055	0
252	Neve	12.3	-0.252	0.515	0	14.1	-0.248	0.507	0
252	Eccezione SdC3	14.1	-0.516	1.055	0	34.6	-0.524	1.072	0
252	Neve	14.1	-0.248	0.507	0	34.6	-0.252	0.515	0
252	Eccezione SdC3	34.6	-0.524	1.072	0	105.6	-0.524	1.072	0
252	Neve	34.6	-0.252	0.515	0	105.6	-0.252	0.515	0
252	Eccezione SdC3	105.6	-0.262	0.536	0	115.9	-0.286	0.584	0
252	Neve	105.6	-0.126	0.257	0	115.9	-0.137	0.281	0
252	Eccezione SdC3	115.9	-0.286	0.584	0	126.1	-0.327	0.668	0
252	Neve	115.9	-0.137	0.281	0	126.1	-0.157	0.321	0
252	Eccezione SdC3	126.1	-0.327	0.668	0	156	-0.378	0.774	0
252	Neve	126.1	-0.157	0.321	0	156	-0.182	0.371	0
252	Eccezione SdC3	156	-0.378	0.774	0	176.6	-0.422	0.862	0
252	Neve	156	-0.182	0.371	0	176.6	-0.202	0.414	0
252	Eccezione SdC3	176.6	-0.422	0.862	0	198.9	-0.477	0.975	0
252	Neve	176.6	-0.202	0.414	0	198.9	-0.229	0.468	0
252	Eccezione SdC3	198.9	-0.477	0.975	0	219.4	-0.524	1.072	0
252	Neve	198.9	-0.229	0.468	0	219.4	-0.252	0.515	0
253	Eccezione SdC3	0	-0.524	-1.072	0	105.6	-0.524	-1.072	0
253	Neve	0	-0.252	-0.515	0	105.6	-0.252	-0.515	0
253	Eccezione SdC3	105.6	-0.253	-0.517	0	115.9	-0.286	-0.584	0
253	Neve	105.6	-0.121	-0.248	0	115.9	-0.137	-0.281	0
253	Eccezione SdC3	115.9	-0.286	-0.584	0	160.5	-0.389	-0.795	0

Indice asta	Condizione	Posizione iniziale	F1 iniziale	F2 iniziale	F3 iniziale	Posizione finale	F1 finale	F2 finale	F3 finale
253	Neve	115.9	-0.137	-0.281	0	160.5	-0.187	-0.381	0
253	Eccezione SdC3	160.5	-0.389	-0.795	0	181	-0.442	-0.904	0
253	Neve	160.5	-0.187	-0.381	0	181	-0.212	-0.434	0
253	Eccezione SdC3	181	-0.442	-0.904	0	198.9	-0.477	-0.975	0
253	Neve	181	-0.212	-0.434	0	198.9	-0.229	-0.468	0
253	Eccezione SdC3	198.9	-0.477	-0.975	0	219.4	-0.524	-1.072	0
253	Neve	198.9	-0.229	-0.468	0	219.4	-0.252	-0.515	0
254	Eccezione SdC3	0	-0.524	1.072	0	105.6	-0.524	1.072	0
254	Neve	0	-0.252	0.515	0	105.6	-0.252	0.515	0
254	Eccezione SdC3	105.6	-0.253	0.517	0	115.9	-0.286	0.584	0
254	Neve	105.6	-0.121	0.248	0	115.9	-0.137	0.281	0
254	Eccezione SdC3	115.9	-0.286	0.584	0	160.5	-0.389	0.795	0
254	Neve	115.9	-0.137	0.281	0	160.5	-0.187	0.381	0
254	Eccezione SdC3	160.5	-0.389	0.795	0	181	-0.442	0.904	0
254	Neve	160.5	-0.187	0.381	0	181	-0.212	0.434	0
254	Eccezione SdC3	181	-0.442	0.904	0	198.9	-0.477	0.975	0
254	Neve	181	-0.212	0.434	0	198.9	-0.229	0.468	0
254	Eccezione SdC3	198.9	-0.477	0.975	0	219.4	-0.524	1.072	0
254	Neve	198.9	-0.229	0.468	0	219.4	-0.252	0.515	0
255	Eccezione SdC3	0	-0.524	-1.072	0	105.6	-0.524	-1.072	0
255	Neve	0	-0.252	-0.515	0	105.6	-0.252	-0.515	0
255	Eccezione SdC3	105.6	-0.253	-0.517	0	115.9	-0.286	-0.584	0
255	Neve	105.6	-0.121	-0.248	0	115.9	-0.137	-0.281	0
255	Eccezione SdC3	115.9	-0.286	-0.584	0	160.5	-0.389	-0.795	0
255	Neve	115.9	-0.137	-0.281	0	160.5	-0.187	-0.381	0
255	Eccezione SdC3	160.5	-0.389	-0.795	0	181	-0.442	-0.904	0
255	Neve	160.5	-0.187	-0.381	0	181	-0.212	-0.434	0
255	Eccezione SdC3	181	-0.442	-0.904	0	198.9	-0.477	-0.975	0
255	Neve	181	-0.212	-0.434	0	198.9	-0.229	-0.468	0
255	Eccezione SdC3	198.9	-0.477	-0.975	0	219.4	-0.524	-1.072	0
255	Neve	198.9	-0.229	-0.468	0	219.4	-0.252	-0.515	0
256	Eccezione SdC3	0	-0.524	1.072	0	105.6	-0.524	1.072	0
256	Neve	0	-0.252	0.515	0	105.6	-0.252	0.515	0
256	Eccezione SdC3	105.6	-0.253	0.517	0	115.9	-0.286	0.584	0
256	Neve	105.6	-0.121	0.248	0	115.9	-0.137	0.281	0
256	Eccezione SdC3	115.9	-0.286	0.584	0	160.5	-0.389	0.795	0
256	Neve	115.9	-0.137	0.281	0	160.5	-0.187	0.381	0
256	Eccezione SdC3	160.5	-0.389	0.795	0	181	-0.442	0.904	0
256	Neve	160.5	-0.187	0.381	0	181	-0.212	0.434	0
256	Eccezione SdC3	181	-0.442	0.904	0	198.9	-0.477	0.975	0
256	Neve	181	-0.212	0.434	0	198.9	-0.229	0.468	0
256	Eccezione SdC3	198.9	-0.477	0.975	0	219.4	-0.524	1.072	0
256	Neve	198.9	-0.229	0.468	0	219.4	-0.252	0.515	0
257	Neve	0	-0.252	-0.515	0	105.6	-0.252	-0.515	0
257	Eccezionale SdC1	0	-1.888	-3.86	0	105.6	-1.888	-3.86	0
257	Neve	105.6	-0.121	-0.248	0	115.9	-0.137	-0.281	0
257	Eccezionale SdC1	105.6	-0.911	-1.862	0	115.9	-1.029	-2.104	0
257	Neve	115.9	-0.137	-0.281	0	160.5	-0.187	-0.381	0
257	Eccezionale SdC1	115.9	-1.029	-2.104	0	160.5	-1.399	-2.861	0
257	Neve	160.5	-0.187	-0.381	0	181	-0.212	-0.434	0
257	Eccezionale SdC1	160.5	-1.399	-2.861	0	181	-1.592	-3.254	0
257	Neve	181	-0.212	-0.434	0	198.9	-0.229	-0.468	0
257	Eccezionale SdC1	181	-1.592	-3.254	0	198.9	-1.717	-3.511	0
257	Neve	198.9	-0.229	-0.468	0	219.4	-0.252	-0.515	0
257	Eccezionale SdC1	198.9	-1.717	-3.511	0	219.4	-1.888	-3.86	0
258	Neve	0	-0.252	0.515	0	105.6	-0.252	0.515	0
258	Eccezionale SdC1	0	-1.888	3.86	0	105.6	-1.888	3.86	0
258	Neve	105.6	-0.121	0.248	0	115.9	-0.137	0.281	0
258	Eccezionale SdC1	105.6	-0.911	1.862	0	115.9	-1.029	2.104	0
258	Neve	115.9	-0.137	0.281	0	160.5	-0.187	0.381	0
258	Eccezionale SdC1	115.9	-1.029	2.104	0	160.5	-1.399	2.861	0
258	Neve	160.5	-0.187	0.381	0	181	-0.212	0.434	0
258	Eccezionale SdC1	160.5	-1.399	2.861	0	181	-1.592	3.254	0
258	Neve	181	-0.212	0.434	0	198.9	-0.229	0.468	0
258	Eccezionale SdC1	181	-1.592	3.254	0	198.9	-1.717	3.511	0
258	Neve	198.9	-0.229	0.468	0	219.4	-0.252	0.515	0
258	Eccezionale SdC1	198.9	-1.717	3.511	0	219.4	-1.888	3.86	0
259	Neve	0	-0.252	-0.515	0	105.6	-0.252	-0.515	0
259	Eccezionale SdC1	0	-1.888	-3.86	0	105.6	-1.888	-3.86	0
259	Neve	105.6	-0.121	-0.248	0	115.9	-0.137	-0.281	0
259	Eccezionale SdC1	105.6	-0.911	-1.862	0	115.9	-1.029	-2.104	0
259	Neve	115.9	-0.137	-0.281	0	160.5	-0.187	-0.381	0
259	Eccezionale SdC1	115.9	-1.029	-2.104	0	160.5	-1.399	-2.861	0
259	Neve	160.5	-0.187	-0.381	0	181	-0.212	-0.434	0
259	Eccezionale SdC1	160.5	-1.399	-2.861	0	181	-1.592	-3.254	0
259	Neve	181	-0.212	-0.434	0	198.9	-0.229	-0.468	0
259	Eccezionale SdC1	181	-1.592	-3.254	0	198.9	-1.717	-3.511	0
259	Neve	198.9	-0.229	-0.468	0	219.4	-0.252	-0.515	0
259	Eccezionale SdC1	198.9	-1.717	-3.511	0	219.4	-1.888	-3.86	0
260	Neve	0	-0.252	0.515	0	105.6	-0.252	0.515	0
260	Eccezionale SdC1	0	-1.888	3.86	0	105.6	-1.888	3.86	0
260	Neve	105.6	-0.121	0.248	0	115.9	-0.137	0.281	0
260	Eccezionale SdC1	105.6	-0.911	1.862	0	115.9	-1.029	2.104	0
260	Neve	115.9	-0.137	0.281	0	160.5	-0.187	0.381	0
260	Eccezionale SdC1	115.9	-1.029	2.104	0	160.5	-1.399	2.861	0
260	Neve	160.5	-0.187	0.381	0	181	-0.212	0.434	0
260	Eccezionale SdC1	160.5	-1.399	2.861	0	181	-1.592	3.254	0
260	Neve	181	-0.212	0.434	0	198.9	-0.229	0.468	0
260	Eccezionale SdC1	181	-1.592	3.254	0	198.9	-1.717	3.511	0
260	Neve	198.9	-0.229	0.468	0	219.4	-0.252	0.515	0
260	Eccezionale SdC1	198.9	-1.717	3.511	0	219.4	-1.888	3.86	0
261	Eccezione SdC3	0	-0.524	-1.072	0	12.3	-0.524	-1.072	0
261	Neve	0	-0.252	-0.515	0	12.3	-0.252	-0.515	0
261	Eccezione SdC3	12.3	-0.524	-1.072	0	14.1	-0.516	-1.055	0
261	Neve	12.3	-0.252	-0.515	0	14.1	-0.248	-0.507	0
261	Eccezione SdC3	14.1	-0.516	-1.055	0	34.6	-0.524	-1.072	0

Indice asta	Condizione	Posizione iniziale	F1 iniziale	F2 iniziale	F3 iniziale	Posizione finale	F1 finale	F2 finale	F3 finale
261	Neve	14.1	-0.248	-0.507	0	34.6	-0.252	-0.515	0
261	Eccezione SdC3	34.6	-0.524	-1.072	0	105.6	-0.524	-1.072	0
261	Neve	34.6	-0.252	-0.515	0	105.6	-0.252	-0.515	0
261	Eccezione SdC3	105.6	-0.262	-0.536	0	115.9	-0.286	-0.584	0
261	Neve	105.6	-0.126	-0.257	0	115.9	-0.137	-0.281	0
261	Eccezione SdC3	115.9	-0.286	-0.584	0	126.1	-0.327	-0.668	0
261	Neve	115.9	-0.137	-0.281	0	126.1	-0.157	-0.321	0
261	Eccezione SdC3	126.1	-0.327	-0.668	0	156	-0.378	-0.774	0
261	Neve	126.1	-0.157	-0.321	0	156	-0.182	-0.371	0
261	Eccezione SdC3	156	-0.378	-0.774	0	176.6	-0.422	-0.862	0
261	Neve	156	-0.182	-0.371	0	176.6	-0.202	-0.414	0
261	Eccezione SdC3	176.6	-0.422	-0.862	0	198.9	-0.477	-0.975	0
261	Neve	176.6	-0.202	-0.414	0	198.9	-0.229	-0.468	0
261	Eccezione SdC3	198.9	-0.477	-0.975	0	219.4	-0.524	-1.072	0
261	Neve	198.9	-0.229	-0.468	0	219.4	-0.252	-0.515	0
262	Eccezione SdC3	0	-0.524	1.072	0	12.3	-0.524	1.072	0
262	Neve	0	-0.252	0.515	0	12.3	-0.252	0.515	0
262	Eccezione SdC3	12.3	-0.524	1.072	0	14.1	-0.516	1.055	0
262	Neve	12.3	-0.252	0.515	0	14.1	-0.248	0.507	0
262	Eccezione SdC3	14.1	-0.516	1.055	0	34.6	-0.524	1.072	0
262	Neve	14.1	-0.248	0.507	0	34.6	-0.252	0.515	0
262	Eccezione SdC3	34.6	-0.524	1.072	0	105.6	-0.524	1.072	0
262	Neve	34.6	-0.252	0.515	0	105.6	-0.252	0.515	0
262	Eccezione SdC3	105.6	-0.262	0.536	0	115.9	-0.286	0.584	0
262	Neve	105.6	-0.126	0.257	0	115.9	-0.137	0.281	0
262	Eccezione SdC3	115.9	-0.286	0.584	0	126.1	-0.327	0.668	0
262	Neve	115.9	-0.137	0.281	0	126.1	-0.157	0.321	0
262	Eccezione SdC3	126.1	-0.327	0.668	0	156	-0.378	0.774	0
262	Neve	126.1	-0.157	0.321	0	156	-0.182	0.371	0
262	Eccezione SdC3	156	-0.378	0.774	0	176.6	-0.422	0.862	0
262	Neve	156	-0.182	0.371	0	176.6	-0.202	0.414	0
262	Eccezione SdC3	176.6	-0.422	0.862	0	198.9	-0.477	0.975	0
262	Neve	176.6	-0.202	0.414	0	198.9	-0.229	0.468	0
262	Eccezione SdC3	198.9	-0.477	0.975	0	209.2	-0.477	0.976	0
262	Neve	198.9	-0.229	0.468	0	209.2	-0.229	0.468	0
262	Eccezione SdC3	209.2	-0.047	0.096	0	219.4	0	0	0
262	Neve	209.2	-0.023	0.046	0	219.4	0	0	0
263	Eccezione SdC3	0	-0.524	-1.072	0	12.3	-0.524	-1.072	0
263	Neve	0	-0.252	-0.515	0	12.3	-0.252	-0.515	0
263	Eccezione SdC3	12.3	-0.524	-1.072	0	14.1	-0.516	-1.055	0
263	Neve	12.3	-0.252	-0.515	0	14.1	-0.248	-0.507	0
263	Eccezione SdC3	14.1	-0.516	-1.055	0	34.6	-0.524	-1.072	0
263	Neve	14.1	-0.248	-0.507	0	34.6	-0.252	-0.515	0
263	Eccezione SdC3	34.6	-0.524	-1.072	0	105.6	-0.524	-1.072	0
263	Neve	34.6	-0.252	-0.515	0	105.6	-0.252	-0.515	0
263	Eccezione SdC3	105.6	-0.262	-0.536	0	115.9	-0.286	-0.584	0
263	Neve	105.6	-0.126	-0.257	0	115.9	-0.137	-0.281	0
263	Eccezione SdC3	115.9	-0.286	-0.584	0	126.1	-0.327	-0.668	0
263	Neve	115.9	-0.137	-0.281	0	126.1	-0.157	-0.321	0
263	Eccezione SdC3	126.1	-0.327	-0.668	0	156	-0.378	-0.774	0
263	Neve	126.1	-0.157	-0.321	0	156	-0.182	-0.371	0
263	Eccezione SdC3	156	-0.378	-0.774	0	176.6	-0.422	-0.862	0
263	Neve	156	-0.182	-0.371	0	176.6	-0.202	-0.414	0
263	Eccezione SdC3	176.6	-0.422	-0.862	0	198.9	-0.477	-0.975	0
263	Neve	176.6	-0.202	-0.414	0	198.9	-0.229	-0.468	0
263	Eccezione SdC3	198.9	-0.477	-0.975	0	209.2	-0.477	-0.976	0
263	Neve	198.9	-0.229	-0.468	0	209.2	-0.229	-0.468	0
263	Eccezione SdC3	209.2	-0.047	-0.096	0	219.4	0	0	0
263	Neve	209.2	-0.023	-0.046	0	219.4	0	0	0
264	Eccezione SdC3	0	-0.524	1.072	0	12.3	-0.524	1.072	0
264	Neve	0	-0.252	0.515	0	12.3	-0.252	0.515	0
264	Eccezione SdC3	12.3	-0.524	1.072	0	14.1	-0.516	1.055	0
264	Neve	12.3	-0.252	0.515	0	14.1	-0.248	0.507	0
264	Eccezione SdC3	14.1	-0.516	1.055	0	34.6	-0.524	1.072	0
264	Neve	14.1	-0.248	0.507	0	34.6	-0.252	0.515	0
264	Eccezione SdC3	34.6	-0.524	1.072	0	105.6	-0.524	1.072	0
264	Neve	34.6	-0.252	0.515	0	105.6	-0.252	0.515	0
264	Eccezione SdC3	105.6	-0.262	0.536	0	115.9	-0.286	0.584	0
264	Neve	105.6	-0.126	0.257	0	115.9	-0.137	0.281	0
264	Eccezione SdC3	115.9	-0.286	0.584	0	126.1	-0.327	0.668	0
264	Neve	115.9	-0.137	0.281	0	126.1	-0.157	0.321	0
264	Eccezione SdC3	126.1	-0.327	0.668	0	156	-0.378	0.774	0
264	Neve	126.1	-0.157	0.321	0	156	-0.182	0.371	0
264	Eccezione SdC3	156	-0.378	0.774	0	176.6	-0.422	0.862	0
264	Neve	156	-0.182	0.371	0	176.6	-0.202	0.414	0
264	Eccezione SdC3	176.6	-0.422	0.862	0	198.9	-0.477	0.975	0
264	Neve	176.6	-0.202	0.414	0	198.9	-0.229	0.468	0
264	Eccezione SdC3	198.9	-0.477	0.975	0	209.2	-0.477	0.976	0
264	Neve	198.9	-0.229	0.468	0	209.2	-0.229	0.468	0
264	Eccezione SdC3	209.2	-0.524	1.072	0	219.4	-0.524	1.072	0
264	Neve	209.2	-0.252	0.515	0	219.4	-0.252	0.515	0
265	Eccezione SdC3	0	-0.524	-1.072	0	12.3	-0.524	-1.072	0
265	Neve	0	-0.252	-0.515	0	12.3	-0.252	-0.515	0
265	Eccezione SdC3	12.3	-0.524	-1.072	0	14.1	-0.516	-1.055	0
265	Neve	12.3	-0.252	-0.515	0	14.1	-0.248	-0.507	0
265	Eccezione SdC3	14.1	-0.516	-1.055	0	34.6	-0.524	-1.072	0
265	Neve	14.1	-0.248	-0.507	0	34.6	-0.252	-0.515	0
265	Eccezione SdC3	34.6	-0.524	-1.072	0	105.6	-0.524	-1.072	0
265	Neve	34.6	-0.252	-0.515	0	105.6	-0.252	-0.515	0
265	Eccezione SdC3	105.6	-0.262	-0.536	0	115.9	-0.286	-0.584	0
265	Neve	105.6	-0.126	-0.257	0	115.9	-0.137	-0.281	0
265	Eccezione SdC3	115.9	-0.286	-0.584	0	126.1	-0.327	-0.668	0
265	Neve	115.9	-0.137	-0.281	0	126.1	-0.157	-0.321	0
265	Eccezione SdC3	126.1	-0.327	-0.668	0	156	-0.378	-0.774	0
265	Neve	126.1	-0.157	-0.321	0	156	-0.182	-0.371	0
265	Eccezione SdC3	156	-0.378	-0.774	0	176.6	-0.422	-0.862	0

Indice asta	Condizione	Posizione iniziale	F1 iniziale	F2 iniziale	F3 iniziale	Posizione finale	F1 finale	F2 finale	F3 finale
265	Neve	156	-0.182	-0.371	0	176.6	-0.202	-0.414	0
265	Eccezione SdC3	176.6	-0.422	-0.862	0	198.9	-0.477	-0.975	0
265	Neve	176.6	-0.202	-0.414	0	198.9	-0.229	-0.468	0
265	Eccezione SdC3	198.9	-0.477	-0.975	0	209.2	-0.477	-0.976	0
265	Neve	198.9	-0.229	-0.468	0	209.2	-0.229	-0.468	0
265	Eccezione SdC3	209.2	-0.524	-1.072	0	219.4	-0.524	-1.072	0
265	Neve	209.2	-0.252	-0.515	0	219.4	-0.252	-0.515	0
266	Eccezione SdC3	0	-0.524	1.072	0	12.3	-0.524	1.072	0
266	Neve	0	-0.252	0.515	0	12.3	-0.252	0.515	0
266	Eccezione SdC3	12.3	-0.524	1.072	0	14.1	-0.516	1.055	0
266	Neve	12.3	-0.252	0.515	0	14.1	-0.248	0.507	0
266	Eccezione SdC3	14.1	-0.516	1.055	0	34.6	-0.524	1.072	0
266	Neve	14.1	-0.248	0.507	0	34.6	-0.252	0.515	0
266	Eccezione SdC3	34.6	-0.524	1.072	0	105.6	-0.524	1.072	0
266	Neve	34.6	-0.252	0.515	0	105.6	-0.252	0.515	0
266	Eccezione SdC3	105.6	-0.262	0.536	0	115.9	-0.286	0.584	0
266	Neve	105.6	-0.126	0.257	0	115.9	-0.137	0.281	0
266	Eccezione SdC3	115.9	-0.286	0.584	0	126.1	-0.327	0.668	0
266	Neve	115.9	-0.137	0.281	0	126.1	-0.157	0.321	0
266	Eccezione SdC3	126.1	-0.327	0.668	0	156	-0.378	0.774	0
266	Neve	126.1	-0.157	0.321	0	156	-0.182	0.371	0
266	Eccezione SdC3	156	-0.378	0.774	0	176.6	-0.422	0.862	0
266	Neve	156	-0.182	0.371	0	176.6	-0.202	0.414	0
266	Eccezione SdC3	176.6	-0.422	0.862	0	198.9	-0.477	0.975	0
266	Neve	176.6	-0.202	0.414	0	198.9	-0.229	0.468	0
266	Eccezione SdC3	198.9	-0.477	0.975	0	209.2	-0.477	0.976	0
266	Neve	198.9	-0.229	0.468	0	209.2	-0.229	0.468	0
266	Eccezione SdC3	209.2	-0.047	0.096	0	219.4	0	0	0
266	Neve	209.2	-0.023	0.046	0	219.4	0	0	0
267	Eccezione SdC3	0	-0.524	1.072	0	12.3	-0.524	1.072	0
267	Neve	0	-0.252	0.515	0	12.3	-0.252	0.515	0
267	Eccezione SdC3	12.3	-0.524	1.072	0	14.1	-0.516	1.055	0
267	Neve	12.3	-0.252	0.515	0	14.1	-0.248	0.507	0
267	Eccezione SdC3	14.1	-0.516	1.055	0	34.6	-0.524	1.072	0
267	Neve	14.1	-0.248	0.507	0	34.6	-0.252	0.515	0
267	Eccezione SdC3	34.6	-0.524	1.072	0	105.6	-0.524	1.072	0
267	Neve	34.6	-0.252	0.515	0	105.6	-0.252	0.515	0
267	Eccezione SdC3	105.6	-0.262	0.536	0	115.9	-0.286	0.584	0
267	Neve	105.6	-0.126	0.257	0	115.9	-0.137	0.281	0
267	Eccezione SdC3	115.9	-0.286	0.584	0	126.1	-0.327	0.668	0
267	Neve	115.9	-0.137	0.281	0	126.1	-0.157	0.321	0
267	Eccezione SdC3	126.1	-0.327	0.668	0	156	-0.378	0.774	0
267	Neve	126.1	-0.157	0.321	0	156	-0.182	0.371	0
267	Eccezione SdC3	156	-0.378	0.774	0	176.6	-0.422	0.862	0
267	Neve	156	-0.182	0.371	0	176.6	-0.202	0.414	0
267	Eccezione SdC3	176.6	-0.422	0.862	0	198.9	-0.477	0.975	0
267	Neve	176.6	-0.202	0.414	0	198.9	-0.229	0.468	0
267	Eccezione SdC3	198.9	-0.477	0.975	0	209.2	-0.477	0.976	0
267	Neve	198.9	-0.229	0.468	0	209.2	-0.229	0.468	0
267	Eccezione SdC3	209.2	-0.524	1.072	0	219.4	-0.524	1.072	0
267	Neve	209.2	-0.252	0.515	0	219.4	-0.252	0.515	0
268	Eccezione SdC3	0	-0.524	-1.072	0	12.3	-0.524	-1.072	0
268	Neve	0	-0.252	-0.515	0	12.3	-0.252	-0.515	0
268	Eccezione SdC3	12.3	-0.524	-1.072	0	14.1	-0.516	-1.055	0
268	Neve	12.3	-0.252	-0.515	0	14.1	-0.248	-0.507	0
268	Eccezione SdC3	14.1	-0.516	-1.055	0	34.6	-0.524	-1.072	0
268	Neve	14.1	-0.248	-0.507	0	34.6	-0.252	-0.515	0
268	Eccezione SdC3	34.6	-0.524	-1.072	0	105.6	-0.524	-1.072	0
268	Neve	34.6	-0.252	-0.515	0	105.6	-0.252	-0.515	0
268	Eccezione SdC3	105.6	-0.262	-0.536	0	115.9	-0.286	-0.584	0
268	Neve	105.6	-0.126	-0.257	0	115.9	-0.137	-0.281	0
268	Eccezione SdC3	115.9	-0.286	-0.584	0	126.1	-0.327	-0.668	0
268	Neve	115.9	-0.137	-0.281	0	126.1	-0.157	-0.321	0
268	Eccezione SdC3	126.1	-0.327	-0.668	0	156	-0.378	-0.774	0
268	Neve	126.1	-0.157	-0.321	0	156	-0.182	-0.371	0
268	Eccezione SdC3	156	-0.378	-0.774	0	176.6	-0.422	-0.862	0
268	Neve	156	-0.182	-0.371	0	176.6	-0.202	-0.414	0
268	Eccezione SdC3	176.6	-0.422	-0.862	0	198.9	-0.477	-0.975	0
268	Neve	176.6	-0.202	-0.414	0	198.9	-0.229	-0.468	0
268	Eccezione SdC3	198.9	-0.477	-0.975	0	209.2	-0.477	-0.976	0
268	Neve	198.9	-0.229	-0.468	0	209.2	-0.229	-0.468	0
268	Eccezione SdC3	209.2	-0.524	-1.072	0	219.4	-0.524	-1.072	0
268	Neve	209.2	-0.252	-0.515	0	219.4	-0.252	-0.515	0
269	Eccezione SdC3	0	-0.524	1.072	0	12.3	-0.524	1.072	0
269	Neve	0	-0.252	0.515	0	12.3	-0.252	0.515	0
269	Eccezione SdC3	12.3	-0.524	1.072	0	14.1	-0.516	1.055	0
269	Neve	12.3	-0.252	0.515	0	14.1	-0.248	0.507	0
269	Eccezione SdC3	14.1	-0.516	1.055	0	34.6	-0.524	1.072	0
269	Neve	14.1	-0.248	0.507	0	34.6	-0.252	0.515	0
269	Eccezione SdC3	34.6	-0.524	1.072	0	105.6	-0.524	1.072	0
269	Neve	34.6	-0.252	0.515	0	105.6	-0.252	0.515	0
269	Eccezione SdC3	105.6	-0.262	0.536	0	115.9	-0.286	0.584	0
269	Neve	105.6	-0.126	0.257	0	115.9	-0.137	0.281	0
269	Eccezione SdC3	115.9	-0.286	0.584	0	126.1	-0.327	0.668	0
269	Neve	115.9	-0.137	0.281	0	126.1	-0.157	0.321	0
269	Eccezione SdC3	126.1	-0.327	0.668	0	156	-0.378	0.774	0
269	Neve	126.1	-0.157	0.321	0	156	-0.182	0.371	0
269	Eccezione SdC3	156	-0.378	0.774	0	176.6	-0.422	0.862	0
269	Neve	156	-0.182	0.371	0	176.6	-0.202	0.414	0
269	Eccezione SdC3	176.6	-0.422	0.862	0	198.9	-0.477	0.975	0
269	Neve	176.6	-0.202	0.414	0	198.9	-0.229	0.468	0
269	Eccezione SdC3	198.9	-0.477	0.975	0	209.2	-0.524	1.072	0
269	Neve	198.9	-0.229	0.468	0	209.2	-0.252	0.515	0
269	Eccezione SdC3	209.2	-0.524	1.072	0	219.4	-0.524	1.072	0
269	Neve	209.2	-0.252	0.515	0	219.4	-0.252	0.515	0
270	Eccezione SdC3	0	-0.524	-1.072	0	12.3	-0.524	-1.072	0

Indice asta	Condizione	Posizione iniziale	F1 iniziale	F2 iniziale	F3 iniziale	Posizione finale	F1 finale	F2 finale	F3 finale
270	Neve	0	-0.252	-0.515	0	12.3	-0.252	-0.515	0
270	Eccezione SdC3	12.3	-0.524	-1.072	0	14.1	-0.516	-1.055	0
270	Neve	12.3	-0.252	-0.515	0	14.1	-0.248	-0.507	0
270	Eccezione SdC3	14.1	-0.516	-1.055	0	34.6	-0.524	-1.072	0
270	Neve	14.1	-0.248	-0.507	0	34.6	-0.252	-0.515	0
270	Eccezione SdC3	34.6	-0.524	-1.072	0	105.6	-0.524	-1.072	0
270	Neve	34.6	-0.252	-0.515	0	105.6	-0.252	-0.515	0
270	Eccezione SdC3	105.6	-0.262	-0.536	0	115.9	-0.286	-0.584	0
270	Neve	105.6	-0.126	-0.257	0	115.9	-0.137	-0.281	0
270	Eccezione SdC3	115.9	-0.286	-0.584	0	126.1	-0.327	-0.668	0
270	Neve	115.9	-0.137	-0.281	0	126.1	-0.157	-0.321	0
270	Eccezione SdC3	126.1	-0.327	-0.668	0	156	-0.378	-0.774	0
270	Neve	126.1	-0.157	-0.321	0	156	-0.182	-0.371	0
270	Eccezione SdC3	156	-0.378	-0.774	0	176.6	-0.422	-0.862	0
270	Neve	156	-0.182	-0.371	0	176.6	-0.202	-0.414	0
270	Eccezione SdC3	176.6	-0.422	-0.862	0	198.9	-0.477	-0.975	0
270	Neve	176.6	-0.202	-0.414	0	198.9	-0.229	-0.468	0
270	Eccezione SdC3	198.9	-0.477	-0.975	0	209.2	-0.477	-0.976	0
270	Neve	198.9	-0.229	-0.468	0	209.2	-0.229	-0.468	0
270	Eccezione SdC3	209.2	-0.477	-0.976	0	219.4	-0.524	-1.072	0
270	Neve	209.2	-0.229	-0.468	0	219.4	-0.252	-0.515	0
271	Eccezione SdC3	0	-0.524	1.072	0	12.3	-0.524	1.072	0
271	Neve	0	-0.252	0.515	0	12.3	-0.252	0.515	0
271	Eccezione SdC3	12.3	-0.524	1.072	0	14.1	-0.516	1.055	0
271	Neve	12.3	-0.252	0.515	0	14.1	-0.248	0.507	0
271	Eccezione SdC3	14.1	-0.516	1.055	0	34.6	-0.524	1.072	0
271	Neve	14.1	-0.248	0.507	0	34.6	-0.252	0.515	0
271	Eccezione SdC3	34.6	-0.524	1.072	0	105.6	-0.524	1.072	0
271	Neve	34.6	-0.252	0.515	0	105.6	-0.252	0.515	0
271	Eccezione SdC3	105.6	-0.262	0.536	0	115.9	-0.286	0.584	0
271	Neve	105.6	-0.126	0.257	0	115.9	-0.137	0.281	0
271	Eccezione SdC3	115.9	-0.286	0.584	0	126.1	-0.327	0.668	0
271	Neve	115.9	-0.137	0.281	0	126.1	-0.157	0.321	0
271	Eccezione SdC3	126.1	-0.327	0.668	0	156	-0.378	0.774	0
271	Neve	126.1	-0.157	0.321	0	156	-0.182	0.371	0
271	Eccezione SdC3	156	-0.378	0.774	0	176.6	-0.422	0.862	0
271	Neve	156	-0.182	0.371	0	176.6	-0.202	0.414	0
271	Eccezione SdC3	176.6	-0.422	0.862	0	198.9	-0.477	0.975	0
271	Neve	176.6	-0.202	0.414	0	198.9	-0.229	0.468	0
271	Eccezione SdC3	198.9	-0.477	0.975	0	219.4	-0.524	1.072	0
271	Neve	198.9	-0.229	0.468	0	219.4	-0.252	0.515	0
272	Eccezione SdC3	0	-0.524	-1.072	0	12.3	-0.524	-1.072	0
272	Neve	0	-0.252	-0.515	0	12.3	-0.252	-0.515	0
272	Eccezione SdC3	12.3	-0.524	-1.072	0	14.1	-0.516	-1.055	0
272	Neve	12.3	-0.252	-0.515	0	14.1	-0.248	-0.507	0
272	Eccezione SdC3	14.1	-0.516	-1.055	0	34.6	-0.524	-1.072	0
272	Neve	14.1	-0.248	-0.507	0	34.6	-0.252	-0.515	0
272	Eccezione SdC3	34.6	-0.524	-1.072	0	105.6	-0.524	-1.072	0
272	Neve	34.6	-0.252	-0.515	0	105.6	-0.252	-0.515	0
272	Eccezione SdC3	105.6	-0.262	-0.536	0	115.9	-0.286	-0.584	0
272	Neve	105.6	-0.126	-0.257	0	115.9	-0.137	-0.281	0
272	Eccezione SdC3	115.9	-0.286	-0.584	0	126.1	-0.327	-0.668	0
272	Neve	115.9	-0.137	-0.281	0	126.1	-0.157	-0.321	0
272	Eccezione SdC3	126.1	-0.327	-0.668	0	156	-0.378	-0.774	0
272	Neve	126.1	-0.157	-0.321	0	156	-0.182	-0.371	0
272	Eccezione SdC3	156	-0.378	-0.774	0	176.6	-0.422	-0.862	0
272	Neve	156	-0.182	-0.371	0	176.6	-0.202	-0.414	0
272	Eccezione SdC3	176.6	-0.422	-0.862	0	198.9	-0.477	-0.975	0
272	Neve	176.6	-0.202	-0.414	0	198.9	-0.229	-0.468	0
272	Eccezione SdC3	198.9	-0.477	-0.975	0	209.2	-0.524	-1.072	0
272	Neve	198.9	-0.229	-0.468	0	209.2	-0.252	-0.515	0
272	Eccezione SdC3	209.2	-0.477	-0.976	0	219.4	-0.524	-1.072	0
272	Neve	209.2	-0.229	-0.468	0	219.4	-0.252	-0.515	0
273	Neve	0	-0.252	0.515	0	105.6	-0.252	0.515	0
273	Eccezionale SdC1	0	-1.888	3.86	0	105.6	-1.888	3.86	0
273	Neve	105.6	-0.121	0.248	0	115.9	-0.137	0.281	0
273	Eccezionale SdC1	105.6	-0.911	1.862	0	115.9	-1.029	2.104	0
273	Neve	115.9	-0.137	0.281	0	160.5	-0.187	0.381	0
273	Eccezionale SdC1	115.9	-1.029	2.104	0	160.5	-1.399	2.861	0
273	Neve	160.5	-0.187	0.381	0	181	-0.212	0.434	0
273	Eccezionale SdC1	160.5	-1.399	2.861	0	181	-1.592	3.254	0
273	Neve	181	-0.212	0.434	0	198.9	-0.229	0.468	0
273	Eccezionale SdC1	181	-1.592	3.254	0	198.9	-1.717	3.511	0
273	Neve	198.9	-0.229	0.468	0	219.4	-0.252	0.515	0
273	Eccezionale SdC1	198.9	-1.717	3.511	0	219.4	-1.888	3.86	0
274	Neve	0	-0.252	-0.515	0	105.6	-0.252	-0.515	0
274	Eccezionale SdC1	0	-1.888	-3.86	0	105.6	-1.888	-3.86	0
274	Neve	105.6	-0.121	-0.248	0	115.9	-0.137	-0.281	0
274	Eccezionale SdC1	105.6	-0.911	-1.862	0	115.9	-1.029	-2.104	0
274	Neve	115.9	-0.137	-0.281	0	160.5	-0.187	-0.381	0
274	Eccezionale SdC1	115.9	-1.029	-2.104	0	160.5	-1.399	-2.861	0
274	Neve	160.5	-0.187	-0.381	0	181	-0.212	-0.434	0
274	Eccezionale SdC1	160.5	-1.399	-2.861	0	181	-1.592	-3.254	0
274	Neve	181	-0.212	-0.434	0	198.9	-0.229	-0.468	0
274	Eccezionale SdC1	181	-1.592	-3.254	0	198.9	-1.717	-3.511	0
274	Neve	198.9	-0.229	-0.468	0	219.4	-0.252	-0.515	0
274	Eccezionale SdC1	198.9	-1.717	-3.511	0	219.4	-1.888	-3.86	0
275	Neve	0	-0.252	0.515	0	105.6	-0.252	0.515	0
275	Eccezionale SdC1	0	-1.888	3.86	0	105.6	-1.888	3.86	0
275	Neve	105.6	-0.121	0.248	0	115.9	-0.137	0.281	0
275	Eccezionale SdC1	105.6	-0.911	1.862	0	115.9	-1.029	2.104	0
275	Neve	115.9	-0.137	0.281	0	160.5	-0.187	0.381	0
275	Eccezionale SdC1	115.9	-1.029	2.104	0	160.5	-1.399	2.861	0
275	Neve	160.5	-0.187	0.381	0	181	-0.212	0.434	0
275	Eccezionale SdC1	160.5	-1.399	2.861	0	181	-1.592	3.254	0
275	Neve	181	-0.212	0.434	0	198.9	-0.229	0.468	0

Indice asta	Condizione	Posizione iniziale	F1 iniziale	F2 iniziale	F3 iniziale	Posizione finale	F1 finale	F2 finale	F3 finale
275	Eccezionale SdC1	181	-1.592	3.254	0	198.9	-1.717	3.511	0
275	Neve	198.9	-0.229	0.468	0	219.4	-0.252	0.515	0
275	Eccezionale SdC1	198.9	-1.717	3.511	0	219.4	-1.888	3.86	0
276	Neve	0	-0.252	-0.515	0	105.6	-0.252	-0.515	0
276	Eccezionale SdC1	0	-1.888	-3.86	0	105.6	-1.888	-3.86	0
276	Neve	105.6	-0.121	-0.248	0	115.9	-0.137	-0.281	0
276	Eccezionale SdC1	105.6	-0.911	-1.862	0	115.9	-1.029	-2.104	0
276	Neve	115.9	-0.137	-0.281	0	160.5	-0.187	-0.381	0
276	Eccezionale SdC1	115.9	-1.029	-2.104	0	160.5	-1.399	-2.861	0
276	Neve	160.5	-0.187	-0.381	0	181	-0.212	-0.434	0
276	Eccezionale SdC1	160.5	-1.399	-2.861	0	181	-1.592	-3.254	0
276	Neve	181	-0.212	-0.434	0	198.9	-0.229	-0.468	0
276	Eccezionale SdC1	181	-1.592	-3.254	0	198.9	-1.717	-3.511	0
276	Neve	198.9	-0.229	-0.468	0	219.4	-0.252	-0.515	0
276	Eccezionale SdC1	198.9	-1.717	-3.511	0	219.4	-1.888	-3.86	0
277	Eccezione SdC3	0	-0.524	1.072	0	105.6	-0.524	1.072	0
277	Neve	0	-0.252	0.515	0	105.6	-0.252	0.515	0
277	Eccezione SdC3	105.6	-0.253	0.517	0	115.9	-0.286	0.584	0
277	Neve	105.6	-0.121	0.248	0	115.9	-0.137	0.281	0
277	Eccezione SdC3	115.9	-0.286	0.584	0	160.5	-0.389	0.795	0
277	Neve	115.9	-0.137	0.281	0	160.5	-0.187	0.381	0
277	Eccezione SdC3	160.5	-0.389	0.795	0	181	-0.442	0.904	0
277	Neve	160.5	-0.187	0.381	0	181	-0.212	0.434	0
277	Eccezione SdC3	181	-0.442	0.904	0	198.9	-0.477	0.975	0
277	Neve	181	-0.212	0.434	0	198.9	-0.229	0.468	0
277	Eccezione SdC3	198.9	-0.477	0.975	0	219.4	-0.524	1.072	0
277	Neve	198.9	-0.229	0.468	0	219.4	-0.252	0.515	0
278	Eccezione SdC3	0	-0.524	-1.072	0	105.6	-0.524	-1.072	0
278	Neve	0	-0.252	-0.515	0	105.6	-0.252	-0.515	0
278	Eccezione SdC3	105.6	-0.253	-0.517	0	115.9	-0.286	-0.584	0
278	Neve	105.6	-0.121	-0.248	0	115.9	-0.137	-0.281	0
278	Eccezione SdC3	115.9	-0.286	-0.584	0	160.5	-0.389	-0.795	0
278	Neve	115.9	-0.137	-0.281	0	160.5	-0.187	-0.381	0
278	Eccezione SdC3	160.5	-0.389	-0.795	0	181	-0.442	-0.904	0
278	Neve	160.5	-0.187	-0.381	0	181	-0.212	-0.434	0
278	Eccezione SdC3	181	-0.442	-0.904	0	198.9	-0.477	-0.975	0
278	Neve	181	-0.212	-0.434	0	198.9	-0.229	-0.468	0
278	Eccezione SdC3	198.9	-0.477	-0.975	0	219.4	-0.524	-1.072	0
278	Neve	198.9	-0.229	-0.468	0	219.4	-0.252	-0.515	0
279	Eccezione SdC3	0	-0.524	1.072	0	105.6	-0.524	1.072	0
279	Neve	0	-0.252	0.515	0	105.6	-0.252	0.515	0
279	Eccezione SdC3	105.6	-0.253	0.517	0	115.9	-0.286	0.584	0
279	Neve	105.6	-0.121	0.248	0	115.9	-0.137	0.281	0
279	Eccezione SdC3	115.9	-0.286	0.584	0	160.5	-0.389	0.795	0
279	Neve	115.9	-0.137	0.281	0	160.5	-0.187	0.381	0
279	Eccezione SdC3	160.5	-0.389	0.795	0	181	-0.442	0.904	0
279	Neve	160.5	-0.187	0.381	0	181	-0.212	0.434	0
279	Eccezione SdC3	181	-0.442	0.904	0	198.9	-0.477	0.975	0
279	Neve	181	-0.212	0.434	0	198.9	-0.229	0.468	0
279	Eccezione SdC3	198.9	-0.477	0.975	0	219.4	-0.524	1.072	0
279	Neve	198.9	-0.229	0.468	0	219.4	-0.252	0.515	0
280	Eccezione SdC3	0	-0.524	-1.072	0	105.6	-0.524	-1.072	0
280	Neve	0	-0.252	-0.515	0	105.6	-0.252	-0.515	0
280	Eccezione SdC3	105.6	-0.253	-0.517	0	115.9	-0.286	-0.584	0
280	Neve	105.6	-0.121	-0.248	0	115.9	-0.137	-0.281	0
280	Eccezione SdC3	115.9	-0.286	-0.584	0	160.5	-0.389	-0.795	0
280	Neve	115.9	-0.137	-0.281	0	160.5	-0.187	-0.381	0
280	Eccezione SdC3	160.5	-0.389	-0.795	0	181	-0.442	-0.904	0
280	Neve	160.5	-0.187	-0.381	0	181	-0.212	-0.434	0
280	Eccezione SdC3	181	-0.442	-0.904	0	198.9	-0.477	-0.975	0
280	Neve	181	-0.212	-0.434	0	198.9	-0.229	-0.468	0
280	Eccezione SdC3	198.9	-0.477	-0.975	0	219.4	-0.524	-1.072	0
280	Neve	198.9	-0.229	-0.468	0	219.4	-0.252	-0.515	0
281	Eccezione SdC3	0	-0.524	1.072	0	12.3	-0.524	1.072	0
281	Neve	0	-0.252	0.515	0	12.3	-0.252	0.515	0
281	Eccezione SdC3	12.3	-0.524	1.072	0	14.1	-0.516	1.055	0
281	Neve	12.3	-0.252	0.515	0	14.1	-0.248	0.507	0
281	Eccezione SdC3	14.1	-0.516	1.055	0	34.6	-0.524	1.072	0
281	Neve	14.1	-0.248	0.507	0	34.6	-0.252	0.515	0
281	Eccezione SdC3	34.6	-0.524	1.072	0	105.6	-0.524	1.072	0
281	Neve	34.6	-0.252	0.515	0	105.6	-0.252	0.515	0
281	Eccezione SdC3	105.6	-0.262	0.536	0	115.9	-0.286	0.584	0
281	Neve	105.6	-0.126	0.257	0	115.9	-0.137	0.281	0
281	Eccezione SdC3	115.9	-0.286	0.584	0	126.1	-0.327	0.668	0
281	Neve	115.9	-0.137	0.281	0	126.1	-0.157	0.321	0
281	Eccezione SdC3	126.1	-0.327	0.668	0	156	-0.378	0.774	0
281	Neve	126.1	-0.157	0.321	0	156	-0.182	0.371	0
281	Eccezione SdC3	156	-0.378	0.774	0	176.6	-0.422	0.862	0
281	Neve	156	-0.182	0.371	0	176.6	-0.202	0.414	0
281	Eccezione SdC3	176.6	-0.422	0.862	0	198.9	-0.477	0.975	0
281	Neve	176.6	-0.202	0.414	0	198.9	-0.229	0.468	0
281	Eccezione SdC3	198.9	-0.477	0.975	0	209.2	-0.477	0.976	0
281	Neve	198.9	-0.229	0.468	0	209.2	-0.229	0.468	0
281	Eccezione SdC3	209.2	-0.477	0.976	0	219.4	-0.524	1.072	0
281	Neve	209.2	-0.229	0.468	0	219.4	-0.252	0.515	0
282	Eccezione SdC3	0	-0.524	-1.072	0	12.3	-0.524	-1.072	0
282	Neve	0	-0.252	-0.515	0	12.3	-0.252	-0.515	0
282	Eccezione SdC3	12.3	-0.524	-1.072	0	14.1	-0.516	-1.055	0
282	Neve	12.3	-0.252	-0.515	0	14.1	-0.248	-0.507	0
282	Eccezione SdC3	14.1	-0.516	-1.055	0	34.6	-0.524	-1.072	0
282	Neve	14.1	-0.248	-0.507	0	34.6	-0.252	-0.515	0
282	Eccezione SdC3	34.6	-0.524	-1.072	0	105.6	-0.524	-1.072	0
282	Neve	34.6	-0.252	-0.515	0	105.6	-0.252	-0.515	0
282	Eccezione SdC3	105.6	-0.262	-0.536	0	115.9	-0.286	-0.584	0
282	Neve	105.6	-0.126	-0.257	0	115.9	-0.137	-0.281	0
282	Eccezione SdC3	115.9	-0.286	-0.584	0	126.1	-0.327	-0.668	0

Indice asta	Condizione	Posizione iniziale	F1 iniziale	F2 iniziale	F3 iniziale	Posizione finale	F1 finale	F2 finale	F3 finale
282	Neve	115.9	-0.137	-0.281	0	126.1	-0.157	-0.321	0
282	Eccezione SdC3	126.1	-0.327	-0.668	0	156	-0.378	-0.774	0
282	Neve	126.1	-0.157	-0.321	0	156	-0.182	-0.371	0
282	Eccezione SdC3	156	-0.378	-0.774	0	176.6	-0.422	-0.862	0
282	Neve	156	-0.182	-0.371	0	176.6	-0.202	-0.414	0
282	Eccezione SdC3	176.6	-0.422	-0.862	0	198.9	-0.477	-0.975	0
282	Neve	176.6	-0.202	-0.414	0	198.9	-0.229	-0.468	0
282	Eccezione SdC3	198.9	-0.477	-0.975	0	219.4	-0.524	-1.072	0
282	Neve	198.9	-0.229	-0.468	0	219.4	-0.252	-0.515	0
283	Eccezione SdC3	0	-0.524	1.072	0	12.3	-0.524	1.072	0
283	Neve	0	-0.252	0.515	0	12.3	-0.252	0.515	0
283	Eccezione SdC3	12.3	-0.524	1.072	0	14.1	-0.516	1.055	0
283	Neve	12.3	-0.252	0.515	0	14.1	-0.248	0.507	0
283	Eccezione SdC3	14.1	-0.516	1.055	0	34.6	-0.524	1.072	0
283	Neve	14.1	-0.248	0.507	0	34.6	-0.252	0.515	0
283	Eccezione SdC3	34.6	-0.524	1.072	0	105.6	-0.524	1.072	0
283	Neve	34.6	-0.252	0.515	0	105.6	-0.252	0.515	0
283	Eccezione SdC3	105.6	-0.262	0.536	0	115.9	-0.286	0.584	0
283	Neve	105.6	-0.126	0.257	0	115.9	-0.137	0.281	0
283	Eccezione SdC3	115.9	-0.286	0.584	0	126.1	-0.327	0.668	0
283	Neve	115.9	-0.137	0.281	0	126.1	-0.157	0.321	0
283	Eccezione SdC3	126.1	-0.327	0.668	0	156	-0.378	0.774	0
283	Neve	126.1	-0.157	0.321	0	156	-0.182	0.371	0
283	Eccezione SdC3	156	-0.378	0.774	0	176.6	-0.422	0.862	0
283	Neve	156	-0.182	0.371	0	176.6	-0.202	0.414	0
283	Eccezione SdC3	176.6	-0.422	0.862	0	198.9	-0.477	0.975	0
283	Neve	176.6	-0.202	0.414	0	198.9	-0.229	0.468	0
283	Eccezione SdC3	198.9	-0.477	0.975	0	209.2	-0.477	0.976	0
283	Neve	198.9	-0.229	0.468	0	209.2	-0.229	0.468	0
283	Eccezione SdC3	209.2	-0.524	1.072	0	219.4	-0.524	1.072	0
283	Neve	209.2	-0.252	0.515	0	219.4	-0.252	0.515	0
284	Eccezione SdC3	0	-0.524	-1.072	0	12.3	-0.524	-1.072	0
284	Neve	0	-0.252	-0.515	0	12.3	-0.252	-0.515	0
284	Eccezione SdC3	12.3	-0.524	-1.072	0	14.1	-0.516	-1.055	0
284	Neve	12.3	-0.252	-0.515	0	14.1	-0.248	-0.507	0
284	Eccezione SdC3	14.1	-0.516	-1.055	0	34.6	-0.524	-1.072	0
284	Neve	14.1	-0.248	-0.507	0	34.6	-0.252	-0.515	0
284	Eccezione SdC3	34.6	-0.524	-1.072	0	105.6	-0.524	-1.072	0
284	Neve	34.6	-0.252	-0.515	0	105.6	-0.252	-0.515	0
284	Eccezione SdC3	105.6	-0.262	-0.536	0	115.9	-0.286	-0.584	0
284	Neve	105.6	-0.126	-0.257	0	115.9	-0.137	-0.281	0
284	Eccezione SdC3	115.9	-0.286	-0.584	0	126.1	-0.327	-0.668	0
284	Neve	115.9	-0.137	-0.281	0	126.1	-0.157	-0.321	0
284	Eccezione SdC3	126.1	-0.327	-0.668	0	156	-0.378	-0.774	0
284	Neve	126.1	-0.157	-0.321	0	156	-0.182	-0.371	0
284	Eccezione SdC3	156	-0.378	-0.774	0	176.6	-0.422	-0.862	0
284	Neve	156	-0.182	-0.371	0	176.6	-0.202	-0.414	0
284	Eccezione SdC3	176.6	-0.422	-0.862	0	198.9	-0.477	-0.975	0
284	Neve	176.6	-0.202	-0.414	0	198.9	-0.229	-0.468	0
284	Eccezione SdC3	198.9	-0.477	-0.975	0	209.2	-0.477	-0.976	0
284	Neve	198.9	-0.229	-0.468	0	209.2	-0.229	-0.468	0
284	Eccezione SdC3	209.2	-0.477	-0.976	0	219.4	-0.524	-1.072	0
284	Neve	209.2	-0.229	-0.468	0	219.4	-0.252	-0.515	0
285	Eccezione SdC3	0	-0.524	1.072	0	12.3	-0.524	1.072	0
285	Neve	0	-0.252	0.515	0	12.3	-0.252	0.515	0
285	Eccezione SdC3	12.3	-0.524	1.072	0	14.1	-0.516	1.055	0
285	Neve	12.3	-0.252	0.515	0	14.1	-0.248	0.507	0
285	Eccezione SdC3	14.1	-0.516	1.055	0	34.6	-0.524	1.072	0
285	Neve	14.1	-0.248	0.507	0	34.6	-0.252	0.515	0
285	Eccezione SdC3	34.6	-0.524	1.072	0	105.6	-0.524	1.072	0
285	Neve	34.6	-0.252	0.515	0	105.6	-0.252	0.515	0
285	Eccezione SdC3	105.6	-0.262	0.536	0	115.9	-0.286	0.584	0
285	Neve	105.6	-0.126	0.257	0	115.9	-0.137	0.281	0
285	Eccezione SdC3	115.9	-0.286	0.584	0	126.1	-0.327	0.668	0
285	Neve	115.9	-0.137	0.281	0	126.1	-0.157	0.321	0
285	Eccezione SdC3	126.1	-0.327	0.668	0	156	-0.378	0.774	0
285	Neve	126.1	-0.157	0.321	0	156	-0.182	0.371	0
285	Eccezione SdC3	156	-0.378	0.774	0	176.6	-0.422	0.862	0
285	Neve	156	-0.182	0.371	0	176.6	-0.202	0.414	0
285	Eccezione SdC3	176.6	-0.422	0.862	0	198.9	-0.477	0.975	0
285	Neve	176.6	-0.202	0.414	0	198.9	-0.229	0.468	0
285	Eccezione SdC3	198.9	-0.477	0.975	0	209.2	-0.524	1.072	0
285	Neve	198.9	-0.229	0.468	0	209.2	-0.252	0.515	0
285	Eccezione SdC3	209.2	-0.477	0.976	0	219.4	-0.524	1.072	0
285	Neve	209.2	-0.229	0.468	0	219.4	-0.252	0.515	0
286	Eccezione SdC3	0	-0.524	-1.072	0	12.3	-0.524	-1.072	0
286	Neve	0	-0.252	-0.515	0	12.3	-0.252	-0.515	0
286	Eccezione SdC3	12.3	-0.524	-1.072	0	14.1	-0.516	-1.055	0
286	Neve	12.3	-0.252	-0.515	0	14.1	-0.248	-0.507	0
286	Eccezione SdC3	14.1	-0.516	-1.055	0	34.6	-0.524	-1.072	0
286	Neve	14.1	-0.248	-0.507	0	34.6	-0.252	-0.515	0
286	Eccezione SdC3	34.6	-0.524	-1.072	0	105.6	-0.524	-1.072	0
286	Neve	34.6	-0.252	-0.515	0	105.6	-0.252	-0.515	0
286	Eccezione SdC3	105.6	-0.262	-0.536	0	115.9	-0.286	-0.584	0
286	Neve	105.6	-0.126	-0.257	0	115.9	-0.137	-0.281	0
286	Eccezione SdC3	115.9	-0.286	-0.584	0	126.1	-0.327	-0.668	0
286	Neve	115.9	-0.137	-0.281	0	126.1	-0.157	-0.321	0
286	Eccezione SdC3	126.1	-0.327	-0.668	0	156	-0.378	-0.774	0
286	Neve	126.1	-0.157	-0.321	0	156	-0.182	-0.371	0
286	Eccezione SdC3	156	-0.378	-0.774	0	176.6	-0.422	-0.862	0
286	Neve	156	-0.182	-0.371	0	176.6	-0.202	-0.414	0
286	Eccezione SdC3	176.6	-0.422	-0.862	0	198.9	-0.477	-0.975	0
286	Neve	176.6	-0.202	-0.414	0	198.9	-0.229	-0.468	0
286	Eccezione SdC3	198.9	-0.477	-0.975	0	209.2	-0.477	-0.976	0
286	Neve	198.9	-0.229	-0.468	0	209.2	-0.229	-0.468	0
286	Eccezione SdC3	209.2	-0.524	-1.072	0	219.4	-0.524	-1.072	0

Indice asta	Condizione	Posizione iniziale	F1 iniziale	F2 iniziale	F3 iniziale	Posizione finale	F1 finale	F2 finale	F3 finale
286	Neve	209.2	-0.252	-0.515	0	219.4	-0.252	-0.515	0

7.4.2 Caratteristiche meccaniche aste

I seguenti dati si riferiscono alle caratteristiche meccaniche delle aste utilizzate dal solutore ad elementi finiti. Normalmente differiscono dalle caratteristiche inerziali delle sezioni definite nel database. Tengono conto dei moltiplicatori inerziali espressi nelle preferenze FEM e di indicazioni tratte dalla bibliografia (SAP 90 Volume I Figura X-8; Belluzzi Vol. 1).

***I.**: numero dell'elemento nell'insieme che lo contiene.*
***Area**: area della sezione trasversale. [cm²]*
***Area 2**: area di taglio per sforzo di taglio nella direzione 2. [cm²]*
***Area 3**: area di taglio per sforzo di taglio nella direzione 3. [cm²]*
***In.2**: momento d'inerzia attorno all'asse locale 2. [cm4]*
***In.3**: momento d'inerzia attorno all'asse locale 3. [cm4]*
***In.tors.**: momento d'inerzia torsionale corretto con il fattore di torsione. [cm4]*
***E**: modulo di elasticità longitudinale. [daN/cm²]*
***G**: modulo di elasticità tangenziale. [daN/cm²]*
***α**: coefficiente di dilatazione termica longitudinale. [°C-1]*
***P.unit.**: peso per unità di lunghezza dell'elemento. [daN/cm]*
***S.fibre**: caratteristiche della sezione a fibre.*
***Sez.corr.**: sezione degli elementi correlati.*
***Desc.**: descrizione o nome assegnato all'elemento.*
***Mat.corr.**: materiale degli elementi correlati.*
***Desc.**: descrizione o nome assegnato all'elemento.*

I.	Area	Area 2	Area 3	In.2	In.3	In.tors.	E	G	α	P.unit.	S.fibre	Sez.corr.	Mat.corr.
												Desc.	Desc.
1	45	10	28	925	2513	11	2100000	807692	0.000012	0.356		HEA180	S275
2	39	9	24	616	1675	9	2100000	807692	0.000012	0.305		HEA160	S275
3	77	16	48	2769	7771	31	2100000	807692	0.000012	0.604		HEA240	S275
4	64	14	40	1955	5415	22	2100000	807692	0.000012	0.506		HEA220	S275
5	32	17	18	148	1911	11	2100000	807692	0.000012	0.253		UPN200	S275

7.4.3 Definizioni aste

***Indice**: numero dell'elemento nell'insieme che lo contiene.*
***Nodo I**: nodo iniziale.*
***Nodo J**: nodo finale.*
***Nodo K**: nodo che definisce l'asse locale 2.*
***Sezione**: caratteristiche inerziali-meccaniche della sezione.*
***Indice**: numero dell'elemento nell'insieme che lo contiene.*

Indice	Nodo I	Nodo J	Nodo K	Sezione	Indice	Nodo I	Nodo J	Nodo K	Sezione	Indice	Nodo I	Nodo J	Nodo K	Sezione	Indice	Nodo I	Nodo J	Nodo K	Sezione
				Indice					Indice					Indice					Indice
1	2	24	126	1	2	3	27	124	1	3	24	69	126	1	4	27	70	126	1
5	69	91	126	1	6	70	92	126	1	7	92	113	126	1	8	91	113	126	1
9	27	26	126	2	10	26	25	126	2	11	25	24	126	2	12	3	26	152	2
13	2	25	126	2	14	26	70	126	2	15	25	69	126	2	16	6	33	126	1
17	7	36	124	1	18	33	73	126	1	19	36	74	126	1	20	73	95	126	1
21	74	96	126	1	22	96	115	126	1	23	95	115	126	1	24	36	35	126	2
25	35	34	126	2	26	34	33	126	2	27	7	35	154	2	28	6	34	126	2
29	35	74	126	2	30	34	73	126	2	31	4	29	126	1	32	5	32	124	1
33	29	71	126	1	34	32	72	126	1	35	71	93	126	1	36	72	94	126	1
37	94	114	126	1	38	93	114	126	1	39	32	31	126	2	40	31	30	126	2
41	30	29	126	2	42	5	31	153	2	43	4	30	126	2	44	31	72	126	2
45	30	71	126	2	46	8	37	126	3	47	9	40	124	3	48	37	75	126	3
49	40	76	126	3	50	75	97	126	3	51	76	98	126	3	52	98	116	126	3
53	97	116	126	3	54	40	39	126	2	55	39	38	126	2	56	38	37	126	2
57	9	39	147	2	58	8	38	126	2	59	39	76	126	2	60	38	75	126	2
61	10	41	126	3	62	11	44	124	3	63	41	77	126	3	64	44	78	126	3
65	77	99	126	3	66	78	100	126	3	67	100	117	126	3	68	99	117	126	3
69	44	43	126	2	70	43	42	126	2	71	42	41	126	2	72	11	43	148	2
73	10	42	126	2	74	43	78	126	2	75	42	77	126	2	76	12	45	126	3
77	13	48	124	3	78	45	79	126	3	79	48	80	126	3	80	79	101	126	3
81	80	102	126	3	82	102	118	126	3	83	101	118	126	3	84	48	47	126	2
85	47	46	126	2	86	46	45	126	2	87	13	47	149	2	88	12	46	126	2
89	47	80	126	2	90	46	79	126	2	91	14	49	126	3	92	15	52	124	3
93	49	81	126	3	94	52	82	126	3	95	81	103	126	3	96	82	104	126	3
97	104	119	126	3	98	103	119	126	3	99	52	51	126	2	100	51	50	126	2
101	50	49	126	2	102	15	51	150	2	103	14	50	126	2	104	51	82	126	2
105	50	81	126	2	106	16	53	126	3	107	17	56	124	3	108	53	83	126	3
109	56	84	126	3	110	83	105	126	3	111	84	106	126	3	112	106	120	126	3
113	105	120	126	3	114	56	55	126	2	115	55	54	126	2	116	54	53	126	2
117	17	55	151	2	118	16	54	126	2	119	55	84	126	2	120	54	83	126	2
121	18	57	126	1	122	19	60	124	1	123	57	85	126	1	124	60	86	126	1
125	85	107	126	1	126	86	108	126	1	127	108	121	126	1	128	107	121	126	1
129	60	59	126	2	130	59	58	126	2	131	58	57	126	2	132	19	59	155	2
133	18	58	126	2	134	59	86	126	2	135	58	85	126	2	136	20	61	126	1
137	21	64	124	1	138	61	87	126	1	139	64	88	126	1	140	87	109	126	1

Indice	Nodo I	Nodo J	Nodo K	Sezione Indice	Indice	Nodo I	Nodo J	Nodo K	Sezione Indice	Indice	Nodo I	Nodo J	Nodo K	Sezione Indice	Indice	Nodo I	Nodo J	Nodo K	Sezione Indice
141	88	110	126	1	142	110	122	126	1	143	109	122	126	1	144	64	63	126	2
145	63	62	126	2	146	62	61	126	2	147	21	63	156	2	148	20	62	126	2
149	63	88	126	2	150	62	87	126	2	151	22	65	126	1	152	23	68	124	1
153	65	89	126	1	154	68	90	126	1	155	89	111	126	1	156	90	112	126	1
157	112	123	126	1	158	111	123	126	1	159	68	67	126	2	160	67	66	126	2
161	66	65	126	2	162	23	67	157	2	163	22	66	126	2	164	67	90	126	2
165	66	89	126	2	166	90	88	126	2	167	89	87	126	2	168	68	64	126	2
169	65	61	126	2	170	112	110	126	2	171	111	109	126	2	172	123	122	126	2
173	88	86	126	2	174	87	85	126	2	175	64	60	126	2	176	61	57	126	2
177	110	108	126	2	178	109	107	126	2	179	122	121	126	2	180	86	84	126	2
181	85	83	126	2	182	60	56	126	2	183	57	53	126	2	184	108	106	126	2
185	107	105	126	2	186	121	120	126	2	187	84	82	126	4	188	83	81	126	4
189	56	52	126	4	190	53	49	126	4	191	106	104	126	4	192	105	103	126	4
193	120	119	126	3	194	82	80	126	4	195	81	79	126	4	196	52	48	126	4
197	49	45	126	4	198	104	102	126	4	199	103	101	126	4	200	119	118	126	3
201	80	78	126	4	202	79	77	126	4	203	48	44	126	4	204	45	41	126	4
205	102	100	126	4	206	101	99	126	4	207	118	117	126	3	208	78	76	126	4
209	77	75	126	4	210	44	40	126	4	211	41	37	126	4	212	100	98	126	4
213	99	97	126	4	214	117	116	126	3	215	76	74	126	2	216	75	73	126	2
217	40	36	126	2	218	98	96	126	2	219	97	95	126	2	220	116	115	126	2
221	74	72	126	2	222	73	71	126	2	223	36	32	126	2	224	96	94	126	2
225	95	93	126	2	226	115	114	126	2	227	72	70	126	2	228	71	69	126	2
229	32	27	126	2	230	94	92	126	2	231	93	91	126	2	232	114	113	126	2
233	37	33	126	2	234	33	29	126	2	235	29	28	126	2	236	39	116	126	2
237	38	116	126	2	238	43	117	126	2	239	42	117	126	2	240	47	118	126	2
241	46	118	126	2	242	51	119	126	2	243	50	119	126	2	244	55	120	126	2
245	54	120	126	2	246	28	24	126	2	247	5	27	126	5	248	3	32	127	5
249	7	32	126	5	250	5	36	129	5	251	9	36	126	5	252	7	40	131	5
253	11	40	126	5	254	9	44	133	5	255	13	44	126	5	256	11	48	135	5
257	15	48	126	5	258	13	52	137	5	259	17	52	126	5	260	15	56	139	5
261	19	56	126	5	262	17	60	141	5	263	21	60	126	5	264	19	64	143	5
265	23	64	126	5	266	21	68	145	5	267	22	61	146	5	268	20	65	126	5
269	20	57	144	5	270	18	61	126	5	271	18	53	142	5	272	16	57	126	5
273	16	49	140	5	274	14	53	126	5	275	14	45	138	5	276	12	49	126	5
277	12	41	136	5	278	10	45	126	5	279	10	37	134	5	280	8	41	126	5
281	8	33	132	5	282	6	37	126	5	283	6	29	130	5	284	4	33	126	5
285	4	24	128	5	286	2	29	126	5										

7.5 MASSE

***Nodo**: nodo su cui è applicata la massa.*
***Massa X**: massa per la componente di spostamento lungo l'asse X. [daN/(cm/s²)]*
***Massa Y**: massa per la componente di spostamento lungo l'asse Y. [daN/(cm/s²)]*
***Massa Z**: massa per la componente di spostamento lungo l'asse Z. [daN/(cm/s²)]*
***Momento Z**: massa momento d'inerzia per la componente di rotazione attorno all'asse Z. [[daN/(cm/s²)]*cm²]*

Nodo	Massa X	Massa Y	Massa Z	Momento Z	Nodo	Massa X	Massa Y	Massa Z	Momento Z
24	5.496	5.496	0	0	25	0.119	0.119	0	0
26	0.119	0.119	0	0	27	5.512	5.512	0	0
28	0.031	0.031	0	0	29	5.557	5.557	0	0
30	0.119	0.119	0	0	31	0.119	0.119	0	0
32	5.572	5.572	0	0	33	5.572	5.572	0	0
34	0.119	0.119	0	0	35	0.119	0.119	0	0
36	5.572	5.572	0	0	37	5.613	5.613	0	0
38	0.147	0.147	0	0	39	0.147	0.147	0	0
40	5.613	5.613	0	0	41	5.633	5.633	0	0
42	0.147	0.147	0	0	43	0.147	0.147	0	0
44	5.633	5.633	0	0	45	5.633	5.633	0	0
46	0.147	0.147	0	0	47	0.147	0.147	0	0
48	5.633	5.633	0	0	49	5.633	5.633	0	0
50	0.147	0.147	0	0	51	0.147	0.147	0	0
52	5.633	5.633	0	0	53	5.613	5.613	0	0
54	0.147	0.147	0	0	55	0.147	0.147	0	0
56	5.613	5.613	0	0	57	5.572	5.572	0	0
58	0.119	0.119	0	0	59	0.119	0.119	0	0
60	5.572	5.572	0	0	61	5.572	5.572	0	0
62	0.119	0.119	0	0	63	0.119	0.119	0	0
64	5.572	5.572	0	0	65	5.512	5.512	0	0
66	0.119	0.119	0	0	67	0.119	0.119	0	0
68	5.512	5.512	0	0	69	3.433	3.433	0	0
70	3.433	3.433	0	0	71	3.464	3.464	0	0
72	3.464	3.464	0	0	73	3.464	3.464	0	0
74	3.464	3.464	0	0	75	3.502	3.502	0	0
76	3.502	3.502	0	0	77	3.522	3.522	0	0
78	3.522	3.522	0	0	79	3.522	3.522	0	0
80	3.522	3.522	0	0	81	3.522	3.522	0	0
82	3.522	3.522	0	0	83	3.502	3.502	0	0
84	3.502	3.502	0	0	85	3.464	3.464	0	0
86	3.464	3.464	0	0	87	3.464	3.464	0	0
88	3.464	3.464	0	0	89	3.433	3.433	0	0
90	3.433	3.433	0	0	91	3.707	3.707	0	0
92	3.707	3.707	0	0	93	3.738	3.738	0	0
94	3.738	3.738	0	0	95	3.738	3.738	0	0
96	3.738	3.738	0	0	97	3.79	3.79	0	0
98	3.79	3.79	0	0	99	3.81	3.81	0	0
100	3.81	3.81	0	0	101	3.81	3.81	0	0

Nodo	Massa X	Massa Y	Massa Z	Momento Z	Nodo	Massa X	Massa Y	Massa Z	Momento Z
102	3.81	3.81	0	0	103	3.81	3.81	0	0
104	3.81	3.81	0	0	105	3.79	3.79	0	0
106	3.79	3.79	0	0	107	3.738	3.738	0	0
108	3.738	3.738	0	0	109	3.738	3.738	0	0
110	3.738	3.738	0	0	111	3.707	3.707	0	0
112	3.707	3.707	0	0	113	5.034	5.034	0	0
114	5.065	5.065	0	0	115	5.065	5.065	0	0
116	5.2	5.2	0	0	117	5.23	5.23	0	0
118	5.23	5.23	0	0	119	5.23	5.23	0	0
120	5.2	5.2	0	0	121	5.065	5.065	0	0
122	5.065	5.065	0	0	123	5.034	5.034	0	0

7.6 MASSE DI PIANO

***Quota**: quota, livello o falda, a cui compete la massa risultante.*
***Massa X**: massa per la componente di spostamento lungo l'asse X. [daN/(cm/s²)]*
***Massa Y**: massa per la componente di spostamento lungo l'asse Y. [daN/(cm/s²)]*

Quota	Massa X	Massa Y	Quota	Massa X	Massa Y
Impalcato 1	125.778	125.778	impalcato 2	76.586	76.586
impalcato 3	82.753	82.753	impalcato 4	56.419	56.419

7.7 ACCELERAZIONI SPETTRALI

***Ind.vertice**: Indice del valore.*
***T**: Periodo di vibrazione. [s]*
***a/g**: Accelerazione spettrale normalizzata ottenuta dividendo l'accelerazione spettrale per l'accelerazione di gravità. Il valore è adimensionale.*

Sisma X SLV

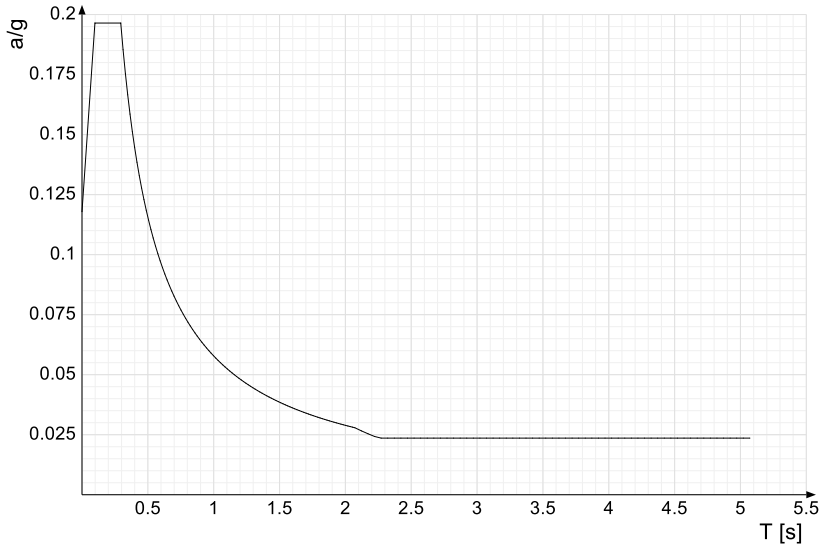

Ind.vertice	T	a/g	Ind.vertice	T	a/g	Ind.vertice	T	a/g	Ind.vertice	T	a/g
1	0	0.118	2	0.098	0.196	3	0.294	0.196	4	0.312	0.185
5	0.329	0.175	6	0.347	0.167	7	0.365	0.159	8	0.382	0.151
9	0.4	0.145	10	0.417	0.138	11	0.435	0.133	12	0.453	0.128
13	0.47	0.123	14	0.488	0.118	15	0.505	0.114	16	0.523	0.111
17	0.541	0.107	18	0.558	0.104	19	0.576	0.1	20	0.593	0.097
21	0.611	0.095	22	0.629	0.092	23	0.646	0.089	24	0.664	0.087
25	0.681	0.085	26	0.699	0.083	27	0.717	0.081	28	0.734	0.079
29	0.752	0.077	30	0.769	0.075	31	0.787	0.073	32	0.805	0.072
33	0.822	0.07	34	0.84	0.069	35	0.857	0.067	36	0.875	0.066
37	0.893	0.065	38	0.91	0.064	39	0.928	0.062	40	0.945	0.061
41	0.963	0.06	42	0.981	0.059	43	0.998	0.058	44	1.016	0.057
45	1.033	0.056	46	1.051	0.055	47	1.069	0.054	48	1.086	0.053
49	1.104	0.052	50	1.121	0.052	51	1.139	0.051	52	1.157	0.05
53	1.174	0.049	54	1.192	0.049	55	1.209	0.048	56	1.227	0.047
57	1.245	0.046	58	1.262	0.046	59	1.28	0.045	60	1.297	0.045
61	1.315	0.044	62	1.332	0.043	63	1.35	0.043	64	1.368	0.042
65	1.385	0.042	66	1.403	0.041	67	1.42	0.041	68	1.438	0.04
69	1.456	0.04	70	1.473	0.039	71	1.491	0.039	72	1.508	0.038
73	1.526	0.038	74	1.544	0.037	75	1.561	0.037	76	1.579	0.037
77	1.596	0.036	78	1.614	0.036	79	1.632	0.035	80	1.649	0.035
81	1.667	0.035	82	1.684	0.034	83	1.702	0.034	84	1.72	0.034
85	1.737	0.033	86	1.755	0.033	87	1.772	0.033	88	1.79	0.032
89	1.808	0.032	90	1.825	0.032	91	1.843	0.031	92	1.86	0.031

Ind.vertice	T	a/g	Ind.vertice	T	a/g	Ind.vertice	T	a/g	Ind.vertice	T	a/g
93	1.878	0.031	94	1.896	0.03	95	1.913	0.03	96	1.931	0.03
97	1.948	0.03	98	1.966	0.029	99	1.984	0.029	100	2.001	0.029
101	2.019	0.029	102	2.036	0.028	103	2.054	0.028	104	2.072	0.028
105	2.122	0.027	106	2.172	0.025	107	2.222	0.024	108	2.272	0.024
109	2.322	0.024	110	2.372	0.024	111	2.422	0.024	112	2.472	0.024
113	2.522	0.024	114	2.572	0.024	115	2.622	0.024	116	2.672	0.024
117	2.722	0.024	118	2.772	0.024	119	2.822	0.024	120	2.872	0.024
121	2.922	0.024	122	2.972	0.024	123	3.022	0.024	124	3.072	0.024
125	3.122	0.024	126	3.172	0.024	127	3.222	0.024	128	3.272	0.024
129	3.322	0.024	130	3.372	0.024	131	3.422	0.024	132	3.472	0.024
133	3.522	0.024	134	3.572	0.024	135	3.622	0.024	136	3.672	0.024
137	3.722	0.024	138	3.772	0.024	139	3.822	0.024	140	3.872	0.024
141	3.922	0.024	142	3.972	0.024	143	4.022	0.024	144	4.072	0.024
145	4.122	0.024	146	4.172	0.024	147	4.222	0.024	148	4.272	0.024
149	4.322	0.024	150	4.372	0.024	151	4.422	0.024	152	4.472	0.024
153	4.522	0.024	154	4.572	0.024	155	4.622	0.024	156	4.672	0.024
157	4.722	0.024	158	4.772	0.024	159	4.822	0.024	160	4.872	0.024
161	4.922	0.024	162	4.972	0.024	163	5.022	0.024	164	5.072	0.024

Sisma Y SLV

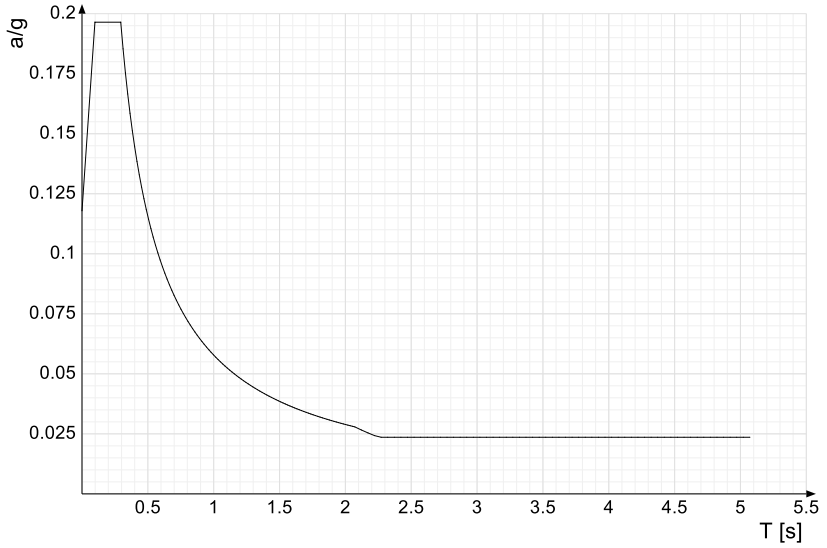

Ind.vertice	T	a/g	Ind.vertice	T	a/g	Ind.vertice	T	a/g	Ind.vertice	T	a/g
1	0	0.118	2	0.098	0.196	3	0.294	0.196	4	0.312	0.185
5	0.329	0.175	6	0.347	0.167	7	0.365	0.159	8	0.382	0.151
9	0.4	0.145	10	0.417	0.138	11	0.435	0.133	12	0.453	0.128
13	0.47	0.123	14	0.488	0.118	15	0.505	0.114	16	0.523	0.111
17	0.541	0.107	18	0.558	0.104	19	0.576	0.1	20	0.593	0.097
21	0.611	0.095	22	0.629	0.092	23	0.646	0.089	24	0.664	0.087
25	0.681	0.085	26	0.699	0.083	27	0.717	0.081	28	0.734	0.079
29	0.752	0.077	30	0.769	0.075	31	0.787	0.073	32	0.805	0.072
33	0.822	0.07	34	0.84	0.069	35	0.857	0.067	36	0.875	0.066
37	0.893	0.065	38	0.91	0.064	39	0.928	0.062	40	0.945	0.061
41	0.963	0.06	42	0.981	0.059	43	0.998	0.058	44	1.016	0.057
45	1.033	0.056	46	1.051	0.055	47	1.069	0.054	48	1.086	0.053
49	1.104	0.052	50	1.121	0.052	51	1.139	0.051	52	1.157	0.05
53	1.174	0.049	54	1.192	0.049	55	1.209	0.048	56	1.227	0.047
57	1.245	0.046	58	1.262	0.046	59	1.28	0.045	60	1.297	0.045
61	1.315	0.044	62	1.332	0.043	63	1.35	0.043	64	1.368	0.042
65	1.385	0.042	66	1.403	0.041	67	1.42	0.041	68	1.438	0.04
69	1.456	0.04	70	1.473	0.039	71	1.491	0.039	72	1.508	0.038
73	1.526	0.038	74	1.544	0.037	75	1.561	0.037	76	1.579	0.037
77	1.596	0.036	78	1.614	0.036	79	1.632	0.035	80	1.649	0.035
81	1.667	0.035	82	1.684	0.034	83	1.702	0.034	84	1.72	0.034
85	1.737	0.033	86	1.755	0.033	87	1.772	0.033	88	1.79	0.032
89	1.808	0.032	90	1.825	0.032	91	1.843	0.031	92	1.86	0.031
93	1.878	0.031	94	1.896	0.03	95	1.913	0.03	96	1.931	0.03
97	1.948	0.03	98	1.966	0.029	99	1.984	0.029	100	2.001	0.029
101	2.019	0.029	102	2.036	0.028	103	2.054	0.028	104	2.072	0.028
105	2.122	0.027	106	2.172	0.025	107	2.222	0.024	108	2.272	0.024
109	2.322	0.024	110	2.372	0.024	111	2.422	0.024	112	2.472	0.024
113	2.522	0.024	114	2.572	0.024	115	2.622	0.024	116	2.672	0.024
117	2.722	0.024	118	2.772	0.024	119	2.822	0.024	120	2.872	0.024
121	2.922	0.024	122	2.972	0.024	123	3.022	0.024	124	3.072	0.024
125	3.122	0.024	126	3.172	0.024	127	3.222	0.024	128	3.272	0.024
129	3.322	0.024	130	3.372	0.024	131	3.422	0.024	132	3.472	0.024
133	3.522	0.024	134	3.572	0.024	135	3.622	0.024	136	3.672	0.024
137	3.722	0.024	138	3.772	0.024	139	3.822	0.024	140	3.872	0.024
141	3.922	0.024	142	3.972	0.024	143	4.022	0.024	144	4.072	0.024
145	4.122	0.024	146	4.172	0.024	147	4.222	0.024	148	4.272	0.024
149	4.322	0.024	150	4.372	0.024	151	4.422	0.024	152	4.472	0.024
153	4.522	0.024	154	4.572	0.024	155	4.622	0.024	156	4.672	0.024
157	4.722	0.024	158	4.772	0.024	159	4.822	0.024	160	4.872	0.024
161	4.922	0.024	162	4.972	0.024	163	5.022	0.024	164	5.072	0.024

Sisma X SLD

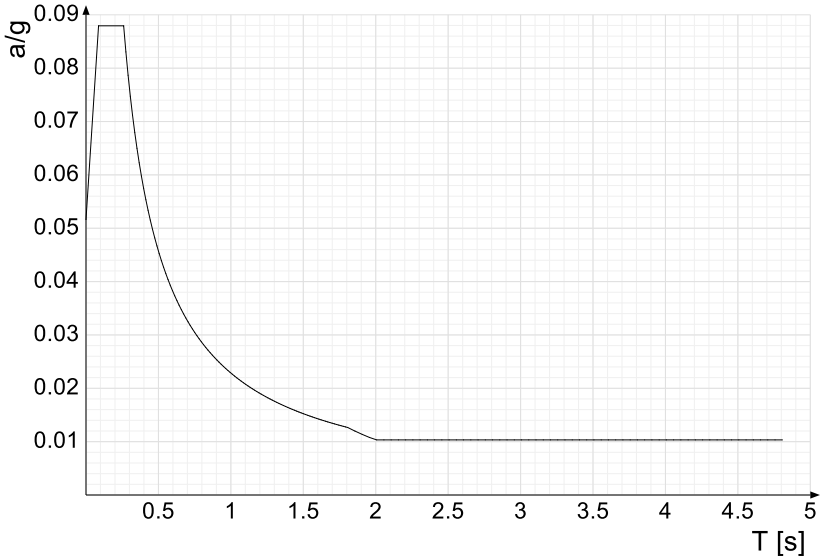

Ind.vertice	T	a/g	Ind.vertice	T	a/g	Ind.vertice	T	a/g	Ind.vertice	T	a/g
1	0	0.052	2	0.087	0.088	3	0.26	0.088	4	0.275	0.083
5	0.291	0.079	6	0.306	0.075	7	0.321	0.071	8	0.337	0.068
9	0.352	0.065	10	0.367	0.062	11	0.382	0.06	12	0.398	0.057
13	0.413	0.055	14	0.428	0.053	15	0.444	0.052	16	0.459	0.05
17	0.474	0.048	18	0.49	0.047	19	0.505	0.045	20	0.52	0.044
21	0.536	0.043	22	0.551	0.042	23	0.566	0.04	24	0.582	0.039
25	0.597	0.038	26	0.612	0.037	27	0.627	0.036	28	0.643	0.036
29	0.658	0.035	30	0.673	0.034	31	0.689	0.033	32	0.704	0.032
33	0.719	0.032	34	0.735	0.031	35	0.75	0.03	36	0.765	0.03
37	0.781	0.029	38	0.796	0.029	39	0.811	0.028	40	0.827	0.028
41	0.842	0.027	42	0.857	0.027	43	0.872	0.026	44	0.888	0.026
45	0.903	0.025	46	0.918	0.025	47	0.934	0.024	48	0.949	0.024
49	0.964	0.024	50	0.98	0.023	51	0.995	0.023	52	1.01	0.023
53	1.026	0.022	54	1.041	0.022	55	1.056	0.022	56	1.072	0.021
57	1.087	0.021	58	1.102	0.021	59	1.117	0.02	60	1.133	0.02
61	1.148	0.02	62	1.163	0.02	63	1.179	0.019	64	1.194	0.019
65	1.209	0.019	66	1.225	0.019	67	1.24	0.018	68	1.255	0.018
69	1.271	0.018	70	1.286	0.018	71	1.301	0.018	72	1.317	0.017
73	1.332	0.017	74	1.347	0.017	75	1.362	0.017	76	1.378	0.017
77	1.393	0.016	78	1.408	0.016	79	1.424	0.016	80	1.439	0.016
81	1.454	0.016	82	1.47	0.016	83	1.485	0.015	84	1.5	0.015
85	1.516	0.015	86	1.531	0.015	87	1.546	0.015	88	1.562	0.015
89	1.577	0.014	90	1.592	0.014	91	1.607	0.014	92	1.623	0.014
93	1.638	0.014	94	1.653	0.014	95	1.669	0.014	96	1.684	0.014
97	1.699	0.013	98	1.715	0.013	99	1.73	0.013	100	1.745	0.013
101	1.761	0.013	102	1.776	0.013	103	1.791	0.013	104	1.807	0.013
105	1.857	0.012	106	1.907	0.011	107	1.957	0.011	108	2.007	0.01
109	2.057	0.01	110	2.107	0.01	111	2.157	0.01	112	2.207	0.01
113	2.257	0.01	114	2.307	0.01	115	2.357	0.01	116	2.407	0.01
117	2.457	0.01	118	2.507	0.01	119	2.557	0.01	120	2.607	0.01
121	2.657	0.01	122	2.707	0.01	123	2.757	0.01	124	2.807	0.01
125	2.857	0.01	126	2.907	0.01	127	2.957	0.01	128	3.007	0.01
129	3.057	0.01	130	3.107	0.01	131	3.157	0.01	132	3.207	0.01
133	3.257	0.01	134	3.307	0.01	135	3.357	0.01	136	3.407	0.01
137	3.457	0.01	138	3.507	0.01	139	3.557	0.01	140	3.607	0.01
141	3.657	0.01	142	3.707	0.01	143	3.757	0.01	144	3.807	0.01
145	3.857	0.01	146	3.907	0.01	147	3.957	0.01	148	4.007	0.01
149	4.057	0.01	150	4.107	0.01	151	4.157	0.01	152	4.207	0.01
153	4.257	0.01	154	4.307	0.01	155	4.357	0.01	156	4.407	0.01
157	4.457	0.01	158	4.507	0.01	159	4.557	0.01	160	4.607	0.01
161	4.657	0.01	162	4.707	0.01	163	4.757	0.01	164	4.807	0.01

Sisma Y SLD

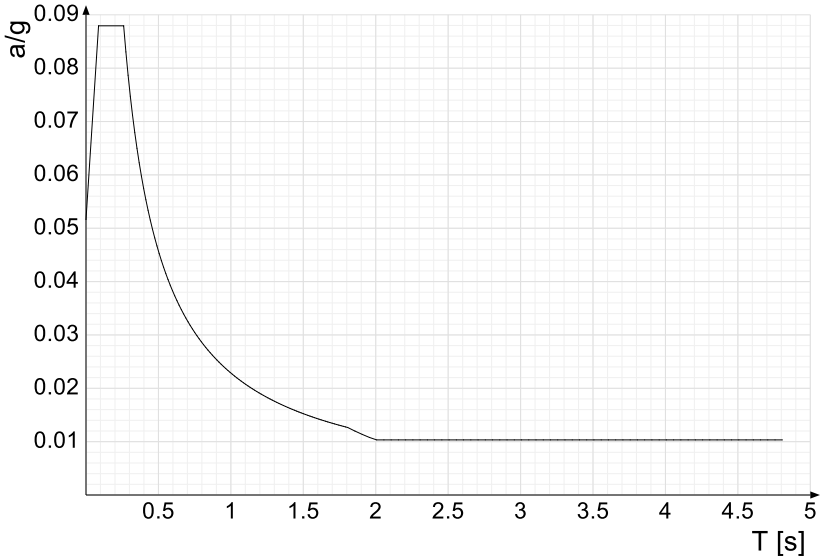

Ind.vertice	T	a/g	Ind.vertice	T	a/g	Ind.vertice	T	a/g	Ind.vertice	T	a/g
1	0	0.052	2	0.087	0.088	3	0.26	0.088	4	0.275	0.083
5	0.291	0.079	6	0.306	0.075	7	0.321	0.071	8	0.337	0.068
9	0.352	0.065	10	0.367	0.062	11	0.382	0.06	12	0.398	0.057
13	0.413	0.055	14	0.428	0.053	15	0.444	0.052	16	0.459	0.05
17	0.474	0.048	18	0.49	0.047	19	0.505	0.045	20	0.52	0.044
21	0.536	0.043	22	0.551	0.042	23	0.566	0.04	24	0.582	0.039
25	0.597	0.038	26	0.612	0.037	27	0.627	0.036	28	0.643	0.036
29	0.658	0.035	30	0.673	0.034	31	0.689	0.033	32	0.704	0.032
33	0.719	0.032	34	0.735	0.031	35	0.75	0.03	36	0.765	0.03
37	0.781	0.029	38	0.796	0.029	39	0.811	0.028	40	0.827	0.028
41	0.842	0.027	42	0.857	0.027	43	0.872	0.026	44	0.888	0.026
45	0.903	0.025	46	0.918	0.025	47	0.934	0.024	48	0.949	0.024
49	0.964	0.024	50	0.98	0.023	51	0.995	0.023	52	1.01	0.023
53	1.026	0.022	54	1.041	0.022	55	1.056	0.022	56	1.072	0.021
57	1.087	0.021	58	1.102	0.021	59	1.117	0.02	60	1.133	0.02
61	1.148	0.02	62	1.163	0.02	63	1.179	0.019	64	1.194	0.019
65	1.209	0.019	66	1.225	0.019	67	1.24	0.018	68	1.255	0.018
69	1.271	0.018	70	1.286	0.018	71	1.301	0.018	72	1.317	0.017
73	1.332	0.017	74	1.347	0.017	75	1.362	0.017	76	1.378	0.017
77	1.393	0.016	78	1.408	0.016	79	1.424	0.016	80	1.439	0.016
81	1.454	0.016	82	1.47	0.016	83	1.485	0.015	84	1.5	0.015
85	1.516	0.015	86	1.531	0.015	87	1.546	0.015	88	1.562	0.015
89	1.577	0.014	90	1.592	0.014	91	1.607	0.014	92	1.623	0.014
93	1.638	0.014	94	1.653	0.014	95	1.669	0.014	96	1.684	0.014
97	1.699	0.013	98	1.715	0.013	99	1.73	0.013	100	1.745	0.013
101	1.761	0.013	102	1.776	0.013	103	1.791	0.013	104	1.807	0.013
105	1.857	0.012	106	1.907	0.011	107	1.957	0.011	108	2.007	0.01
109	2.057	0.01	110	2.107	0.01	111	2.157	0.01	112	2.207	0.01
113	2.257	0.01	114	2.307	0.01	115	2.357	0.01	116	2.407	0.01
117	2.457	0.01	118	2.507	0.01	119	2.557	0.01	120	2.607	0.01
121	2.657	0.01	122	2.707	0.01	123	2.757	0.01	124	2.807	0.01
125	2.857	0.01	126	2.907	0.01	127	2.957	0.01	128	3.007	0.01
129	3.057	0.01	130	3.107	0.01	131	3.157	0.01	132	3.207	0.01
133	3.257	0.01	134	3.307	0.01	135	3.357	0.01	136	3.407	0.01
137	3.457	0.01	138	3.507	0.01	139	3.557	0.01	140	3.607	0.01
141	3.657	0.01	142	3.707	0.01	143	3.757	0.01	144	3.807	0.01
145	3.857	0.01	146	3.907	0.01	147	3.957	0.01	148	4.007	0.01
149	4.057	0.01	150	4.107	0.01	151	4.157	0.01	152	4.207	0.01
153	4.257	0.01	154	4.307	0.01	155	4.357	0.01	156	4.407	0.01
157	4.457	0.01	158	4.507	0.01	159	4.557	0.01	160	4.607	0.01
161	4.657	0.01	162	4.707	0.01	163	4.757	0.01	164	4.807	0.01

Sisma X SLO

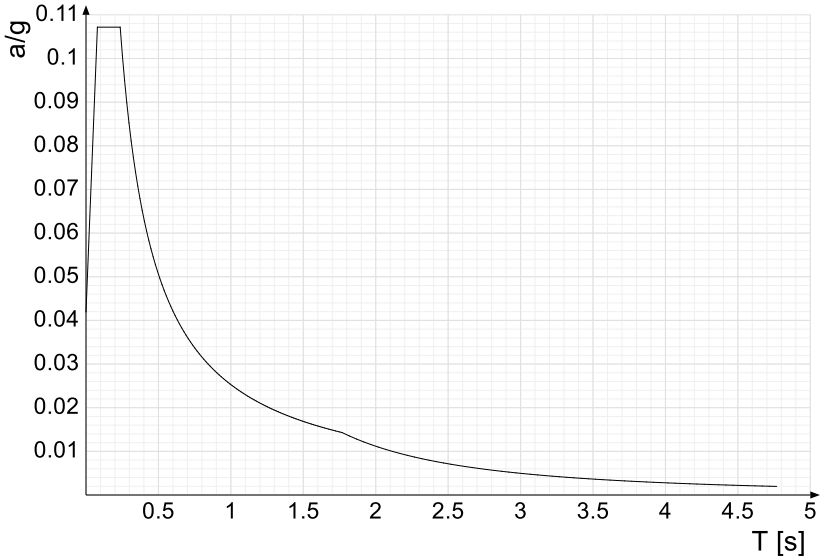

Ind.vertice	T	a/g	Ind.vertice	T	a/g	Ind.vertice	T	a/g	Ind.vertice	T	a/g
1	0	0.042	2	0.079	0.107	3	0.236	0.107	4	0.251	0.101
5	0.266	0.095	6	0.281	0.09	7	0.297	0.085	8	0.312	0.081
9	0.327	0.077	10	0.342	0.074	11	0.357	0.071	12	0.372	0.068
13	0.388	0.065	14	0.403	0.063	15	0.418	0.061	16	0.433	0.058
17	0.448	0.056	18	0.463	0.055	19	0.479	0.053	20	0.494	0.051
21	0.509	0.05	22	0.524	0.048	23	0.539	0.047	24	0.554	0.046
25	0.57	0.044	26	0.585	0.043	27	0.6	0.042	28	0.615	0.041
29	0.63	0.04	30	0.645	0.039	31	0.661	0.038	32	0.676	0.037
33	0.691	0.037	34	0.706	0.036	35	0.721	0.035	36	0.736	0.034
37	0.752	0.034	38	0.767	0.033	39	0.782	0.032	40	0.797	0.032
41	0.812	0.031	42	0.827	0.031	43	0.843	0.03	44	0.858	0.029
45	0.873	0.029	46	0.888	0.028	47	0.903	0.028	48	0.918	0.028
49	0.934	0.027	50	0.949	0.027	51	0.964	0.026	52	0.979	0.026
53	0.994	0.025	54	1.009	0.025	55	1.025	0.025	56	1.04	0.024
57	1.055	0.024	58	1.07	0.024	59	1.085	0.023	60	1.1	0.023
61	1.116	0.023	62	1.131	0.022	63	1.146	0.022	64	1.161	0.022
65	1.176	0.022	66	1.191	0.021	67	1.207	0.021	68	1.222	0.021
69	1.237	0.02	70	1.252	0.02	71	1.267	0.02	72	1.282	0.02
73	1.298	0.019	74	1.313	0.019	75	1.328	0.019	76	1.343	0.019
77	1.358	0.019	78	1.373	0.018	79	1.389	0.018	80	1.404	0.018
81	1.419	0.018	82	1.434	0.018	83	1.449	0.017	84	1.464	0.017
85	1.48	0.017	86	1.495	0.017	87	1.51	0.017	88	1.525	0.017
89	1.54	0.016	90	1.555	0.016	91	1.571	0.016	92	1.586	0.016
93	1.601	0.016	94	1.616	0.016	95	1.631	0.016	96	1.646	0.015
97	1.662	0.015	98	1.677	0.015	99	1.692	0.015	100	1.707	0.015
101	1.722	0.015	102	1.737	0.015	103	1.753	0.014	104	1.768	0.014
105	1.818	0.014	106	1.868	0.013	107	1.918	0.012	108	1.968	0.012
109	2.018	0.011	110	2.068	0.01	111	2.118	0.01	112	2.168	0.01
113	2.218	0.009	114	2.268	0.009	115	2.318	0.008	116	2.368	0.008
117	2.418	0.008	118	2.468	0.007	119	2.518	0.007	120	2.568	0.007
121	2.618	0.007	122	2.668	0.006	123	2.718	0.006	124	2.768	0.006
125	2.818	0.006	126	2.868	0.005	127	2.918	0.005	128	2.968	0.005
129	3.018	0.005	130	3.068	0.005	131	3.118	0.005	132	3.168	0.004
133	3.218	0.004	134	3.268	0.004	135	3.318	0.004	136	3.368	0.004
137	3.418	0.004	138	3.468	0.004	139	3.518	0.004	140	3.568	0.004
141	3.618	0.003	142	3.668	0.003	143	3.718	0.003	144	3.768	0.003
145	3.818	0.003	146	3.868	0.003	147	3.918	0.003	148	3.968	0.003
149	4.018	0.003	150	4.068	0.003	151	4.118	0.003	152	4.168	0.003
153	4.218	0.003	154	4.268	0.002	155	4.318	0.002	156	4.368	0.002
157	4.418	0.002	158	4.468	0.002	159	4.518	0.002	160	4.568	0.002
161	4.618	0.002	162	4.668	0.002	163	4.718	0.002	164	4.768	0.002

Sisma Y SLO

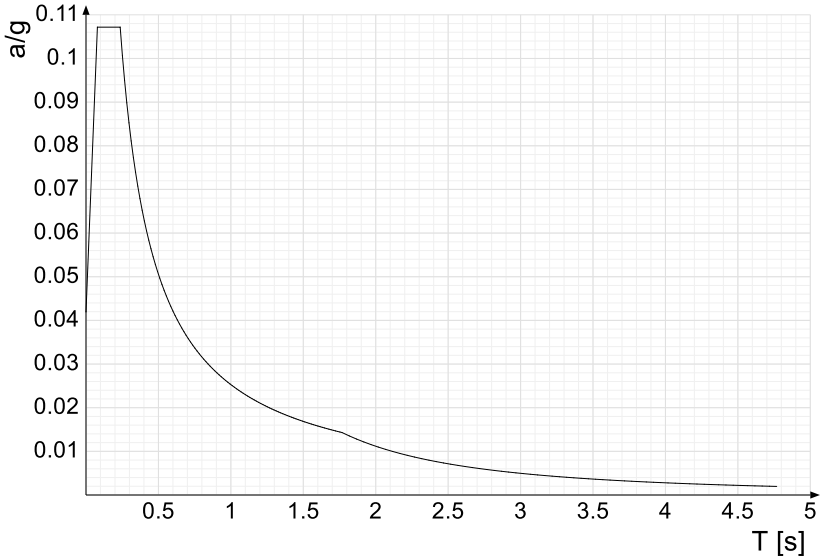

Ind.vertice	T	a/g	Ind.vertice	T	a/g	Ind.vertice	T	a/g	Ind.vertice	T	a/g
1	0	0.042	2	0.079	0.107	3	0.236	0.107	4	0.251	0.101
5	0.266	0.095	6	0.281	0.09	7	0.297	0.085	8	0.312	0.081
9	0.327	0.077	10	0.342	0.074	11	0.357	0.071	12	0.372	0.068
13	0.388	0.065	14	0.403	0.063	15	0.418	0.061	16	0.433	0.058
17	0.448	0.056	18	0.463	0.055	19	0.479	0.053	20	0.494	0.051
21	0.509	0.05	22	0.524	0.048	23	0.539	0.047	24	0.554	0.046
25	0.57	0.044	26	0.585	0.043	27	0.6	0.042	28	0.615	0.041
29	0.63	0.04	30	0.645	0.039	31	0.661	0.038	32	0.676	0.037
33	0.691	0.037	34	0.706	0.036	35	0.721	0.035	36	0.736	0.034
37	0.752	0.034	38	0.767	0.033	39	0.782	0.032	40	0.797	0.032
41	0.812	0.031	42	0.827	0.031	43	0.843	0.03	44	0.858	0.029
45	0.873	0.029	46	0.888	0.028	47	0.903	0.028	48	0.918	0.028
49	0.934	0.027	50	0.949	0.027	51	0.964	0.026	52	0.979	0.026
53	0.994	0.025	54	1.009	0.025	55	1.025	0.025	56	1.04	0.024
57	1.055	0.024	58	1.07	0.024	59	1.085	0.023	60	1.1	0.023
61	1.116	0.023	62	1.131	0.022	63	1.146	0.022	64	1.161	0.022
65	1.176	0.022	66	1.191	0.021	67	1.207	0.021	68	1.222	0.021
69	1.237	0.02	70	1.252	0.02	71	1.267	0.02	72	1.282	0.02
73	1.298	0.019	74	1.313	0.019	75	1.328	0.019	76	1.343	0.019
77	1.358	0.019	78	1.373	0.018	79	1.389	0.018	80	1.404	0.018
81	1.419	0.018	82	1.434	0.018	83	1.449	0.017	84	1.464	0.017
85	1.48	0.017	86	1.495	0.017	87	1.51	0.017	88	1.525	0.017
89	1.54	0.016	90	1.555	0.016	91	1.571	0.016	92	1.586	0.016
93	1.601	0.016	94	1.616	0.016	95	1.631	0.016	96	1.646	0.015
97	1.662	0.015	98	1.677	0.015	99	1.692	0.015	100	1.707	0.015
101	1.722	0.015	102	1.737	0.015	103	1.753	0.014	104	1.768	0.014
105	1.818	0.014	106	1.868	0.013	107	1.918	0.012	108	1.968	0.012
109	2.018	0.011	110	2.068	0.01	111	2.118	0.01	112	2.168	0.01
113	2.218	0.009	114	2.268	0.009	115	2.318	0.008	116	2.368	0.008
117	2.418	0.008	118	2.468	0.007	119	2.518	0.007	120	2.568	0.007
121	2.618	0.007	122	2.668	0.006	123	2.718	0.006	124	2.768	0.006
125	2.818	0.006	126	2.868	0.005	127	2.918	0.005	128	2.968	0.005
129	3.018	0.005	130	3.068	0.005	131	3.118	0.005	132	3.168	0.004
133	3.218	0.004	134	3.268	0.004	135	3.318	0.004	136	3.368	0.004
137	3.418	0.004	138	3.468	0.004	139	3.518	0.004	140	3.568	0.004
141	3.618	0.003	142	3.668	0.003	143	3.718	0.003	144	3.768	0.003
145	3.818	0.003	146	3.868	0.003	147	3.918	0.003	148	3.968	0.003
149	4.018	0.003	150	4.068	0.003	151	4.118	0.003	152	4.168	0.003
153	4.218	0.003	154	4.268	0.002	155	4.318	0.002	156	4.368	0.002
157	4.418	0.002	158	4.468	0.002	159	4.518	0.002	160	4.568	0.002
161	4.618	0.002	162	4.668	0.002	163	4.718	0.002	164	4.768	0.002

8 RISULTATI NUMERICI

8.1 SOLLECITAZIONI

8.1.1 Sollecitazioni aste

8.1.1.1 Convenzioni di segno aste

Le abbreviazioni relative alle sollecitazioni sugli elementi aste sono da intendersi:

- F1 (N): sforzo normale nell'asta;
- F2: sforzo di taglio agente nella direzione dell'asse locale 2;
- F3: sforzo di taglio agente nella direzione dell'asse locale 3;
- M1 (Mt): momento attorno all'asse locale 1; equivale al momento torcente;
- M2: momento attorno all'asse locale 2;
- M3: momento attorno all'asse locale 3.

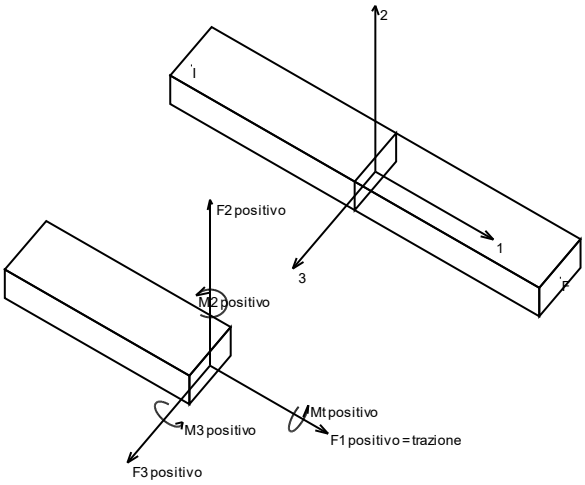

La convenzione sui segni per i parametri di sollecitazione delle aste è la seguente:
presa un'asta con nodo iniziale i e nodo finale f, asse 1 che va da i a f, assi 2 e 3 presi secondo quanto indicato nei paragrafi successivi relativi al sistema locale delle aste sezionando l'asta in un punto e considerando la sezione sinistra del punto in cui si è effettuato il taglio (sezione da cui esce il versore asse 1) i parametri di sollecitazione sono positivi se hanno verso e direzione concordi con il sistema di riferimento locale dell'asta 1, 2, 3 (per i momenti si adotta la regola della mano destra).

Il sistema è definito diversamente per tre categorie di aste, a seconda che siano originate da:

- aste verticali ad esempio pilastri e colonne;
- aste non verticali non di c.a., ad esempio travi di acciaio o legno;
- aste non verticali in c.a.: travi in c.a. di piano, falda o a quota generica.

Nel seguito si indica con 1, 2 e 3 il sistema locale dell'asta che non sempre coincide con gli assi principali della sezione. Si ricorda che per assi principali si intendono gli assi rispetto a cui si ha il raggio di inerzia minimo e massimo. Gli assi 1, 2 e 3 rispettano la regola della mano destra.

Sistema locale aste verticali

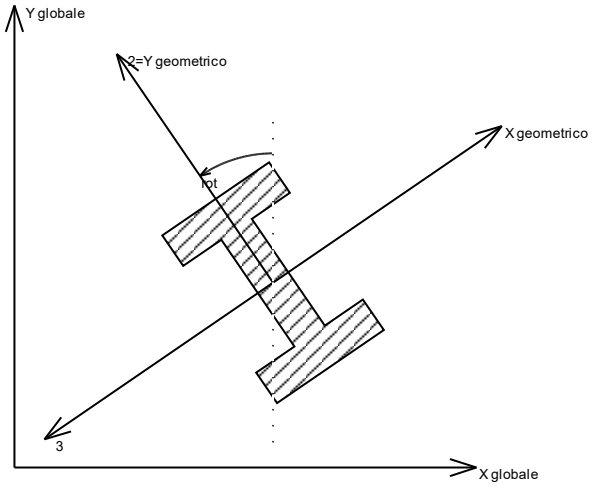

Nella figura si considera l'asse 1 uscente dal foglio (l'osservatore guarda in direzione opposta a quella dell'asse 1).

Sistema locale aste non verticali

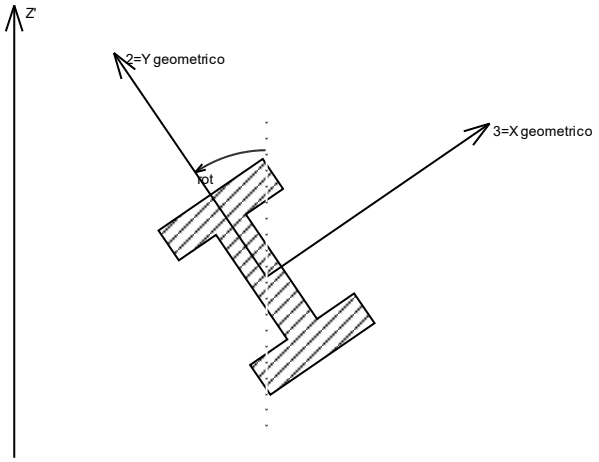

Nella figura si considera l'asse 1 entrante nel foglio (l'osservatore guarda in direzione coincidente a quella dell'asse 1).

L'asse Z' è illustrato nella figura seguente dove:

- P1 è il punto di inserimento iniziale dell'asta;
- P2 è il punto di inserimento finale dell'asta;
- N è la normale al piano o falda di inserimento;

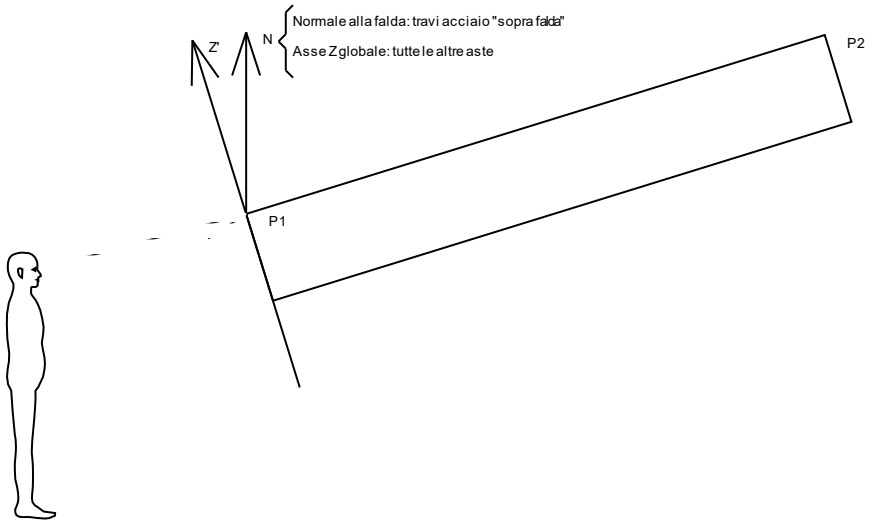

Z' è quindi l'intersezione tra il piano passante per P1, P2 contenente N e il piano della sezione iniziale dell'asta.

Sistema locale aste derivanti da travi in c.a.

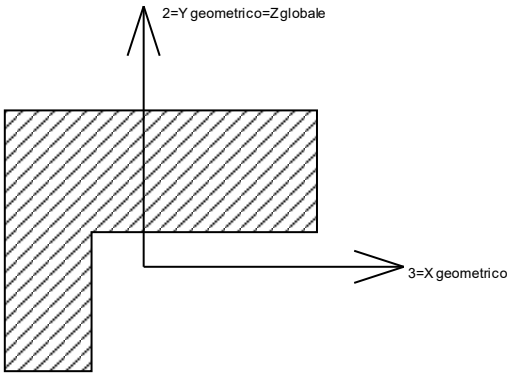

Nella figura si considera l'asse 1 entrante nel foglio (l'osservatore guarda in direzione coincidente a quella dell'asse 1). L'asse 2 è sempre verticale e quindi coincidente con l'asse Z globale nonché con l'asse y geometrico. L'asse 3 coincide con l'asse x geometrico. . Si sottolinea il fatto che gli assi 2 e 3 non corrispondono agli assi principali della sezione.

8.1.1.2 Sollecitazioni estreme aste

***Asta**: elemento asta a cui si riferiscono le sollecitazioni.*
***Ind.**: indice dell'asta.*
***Cont.**: contesto a cui si riferisce la sollecitazione*
***N.br.**: nome breve della condizione o combinazione di carico.*
***Pos.**: numero della sezione all'interno dell'asta (tra 1 e 31, dove 1 corrisponde alla sezione al nodo iniziale, 16 è la sezione in mezzeria, 31 corrisponde alla sezione al nodo finale).*
***Posizione**: posizione a cui si riferisce la sollecitazione dell'asta.*
***X**: componente X della posizione a cui si riferisce la sollecitazione dell'asta. [cm]*
***Y**: componente Y della posizione a cui si riferisce la sollecitazione dell'asta. [cm]*
***Z**: componente Z della posizione a cui si riferisce la sollecitazione dell'asta. [cm]*
***Soll.traslazionale**: componente traslazionale della sollecitazione dell'asta.*
***F1**: componente F1 della sollecitazione dell'asta. [daN]*
***F2**: componente F2 della sollecitazione dell'asta. [daN]*
***F3**: componente F3 della sollecitazione dell'asta. [daN]*
***Soll.rotazionale**: componente rotazionale della sollecitazione dell'asta.*
***M1**: componente M1 della sollecitazione dell'asta. [daN*cm]*
***M2**: componente M2 della sollecitazione dell'asta. [daN*cm]*

***M3**: componente M3 della sollecitazione dell'asta. [daN*cm]*

Sollecitazioni con sforzo normale (N) minimo

Vengono mostrate le sole 5 aste più sollecitate.

Asta	Cont.	Pos.	Posizione			Soll.traslazionale			Soll.rotazionale		
Ind.	N.br.		X	Y	Z	F1	F2	F3	M1	M2	M3
94	SLU 85	1	638	1200	88	-83801	-1663	0	-4	-11	-586325
93	SLU 85	1	43	1200	88	-83801	-1663	0	4	11	-586325
96	SLU 85	1	582	1200	138	-78857	-16773	0	0	-12	-619501
95	SLU 85	1	98	1200	138	-78857	-16773	0	0	12	-619501
79	SLU 84	1	638	1000	88	-70285	-1726	0	-2	27	-490372

Sollecitazioni con sforzo normale (N) massimo

Vengono mostrate le sole 5 aste più sollecitate.

Asta	Cont.	Pos.	Posizione			Soll.traslazionale			Soll.rotazionale		
Ind.	N.br.		X	Y	Z	F1	F2	F3	M1	M2	M3
100	SLU 85	1	510	1200	88	36197	-67	0	0	-3	35330
40	SLU 99	1	490	200	88	33214	-61	0	0	4	-19783
85	SLU 85	1	510	1000	88	29856	-66	0	0	0	28879
99	SLU 85	1	638	1200	88	28074	301	0	0	0	0
101	SLU 85	1	171	1200	88	28074	-352	0	0	-2	-41778

Sollecitazioni con momento M2 minimo

Vengono mostrate le sole 5 aste più sollecitate.

Asta	Cont.	Pos.	Posizione			Soll.traslazionale			Soll.rotazionale		
Ind.	N.br.		X	Y	Z	F1	F2	F3	M1	M2	M3
113	SLV 7	31	340	1400	188	-6556	3105	-299	164	-86845	-99384
52	SLV 9	31	340	600	188	-6556	3105	-299	164	-86845	-99384
53	Y SLV	31	340	600	188	0	0	-299	164	-86828	0
112	SLV 5	31	340	1400	188	-7618	3109	-299	165	-86811	-98149
67	SLV 5	31	340	800	188	-7659	3111	-297	170	-86568	-98236

Sollecitazioni con momento M2 massimo

Vengono mostrate le sole 5 aste più sollecitate.

Asta	Cont.	Pos.	Posizione			Soll.traslazionale			Soll.rotazionale		
Ind.	N.br.		X	Y	Z	F1	F2	F3	M1	M2	M3
112	SLV 11	31	340	1400	188	-6556	3105	299	-164	86845	-99384
53	SLV 5	31	340	600	188	-6556	3105	299	-164	86845	-99384
52	Y SLV	31	340	600	188	0	0	299	-164	86828	0
113	SLV 9	31	340	1400	188	-7618	3109	299	-165	86811	-98149
68	SLV 9	31	340	800	188	-7659	3111	297	-170	86568	-98236

Sollecitazioni con momento M3 minimo

Vengono mostrate le sole 5 aste più sollecitate.

Asta	Cont.	Pos.	Posizione			Soll.traslazionale			Soll.rotazionale		
Ind.	N.br.		X	Y	Z	F1	F2	F3	M1	M2	M3
95	SLU 72	1	98	1200	138	-78857	-16773	0	0	6	-619502
96	SLU 72	1	582	1200	138	-78857	-16773	0	0	-6	-619502
94	SLU 85	31	582	1200	138	-80010	2546	0	-4	-12	-619329
93	SLU 85	31	98	1200	138	-80010	2546	0	4	12	-619328
92	SLU 85	31	638	1200	88	-62072	7007	0	-2	-8	-586218

Sollecitazioni con momento M3 massimo

Vengono mostrate le sole 5 aste più sollecitate.

Asta	Cont.	Pos.	Posizione			Soll.traslazionale			Soll.rotazionale		
Ind.	N.br.		X	Y	Z	F1	F2	F3	M1	M2	M3
193	SLU 72	16	340	1300	188	1	-2	0	0	0	1738069
200	SLU 72	16	340	1100	188	1	-2	0	0	0	1738069
207	SLU 84	16	340	900	188	1	0	0	0	0	1091264
214	SLU 72	16	340	700	188	1	0	0	0	0	1081103
191	SLU 72	16	510	1300	168	-7	-2	0	124	0	898330

8.2 SPOSTAMENTI NODALI

8.2.1 Spostamenti nodali estremi

***Nodo**: nodo interessato dallo spostamento.*
***Ind.**: indice del nodo.*
***Cont.**: condizione o combinazione di carico a cui si riferisce lo spostamento.*
***N.br.**: nome breve della condizione o combinazione di carico.*
***Spostamento**: spostamento traslazionale del nodo.*
***ux**: componente X dello spostamento del nodo. [cm]*
***uy**: componente Y dello spostamento del nodo. [cm]*
***uz**: componente Z dello spostamento del nodo. [cm]*
***Rotazione**: spostamento rotazionale del nodo.*
***rx**: componente X della rotazione del nodo. [deg]*

***ry**: componente Y della rotazione del nodo. [deg]*
***rz**: componente Z della rotazione del nodo. [deg]*

Spostamenti nodali con componente Ux minima

Vengono mostrati i soli 5 nodi più sollecitati.

Nodo	Cont.	Spostamento			Rotazione		
Ind.	N.br.	ux	uy	uz	rx	ry	rz
71	SLV 3	-0.28173	0.38961	0.13983	-0.1899	-0.0201	0.2327
87	SLV 1	-0.28173	-0.38961	0.13983	0.1899	-0.0201	-0.2327
73	SLV 1	-0.28148	-0.38974	0.13967	0.1859	-0.02	-0.2342
85	SLV 3	-0.28148	0.38974	0.13967	-0.1859	-0.02	0.2342
69	SLV 1	-0.27747	-0.3898	0.13571	0.1783	-0.0194	-0.237

Spostamenti nodali con componente Ux massima

Vengono mostrati i soli 5 nodi più sollecitati.

Nodo	Cont.	Spostamento			Rotazione		
Ind.	N.br.	ux	uy	uz	rx	ry	rz
72	SLV 15	0.28173	0.38961	0.13983	-0.1899	0.0201	-0.2327
88	SLV 13	0.28173	-0.38961	0.13983	0.1899	0.0201	0.2327
86	SLV 15	0.28148	0.38974	0.13967	-0.1859	0.02	-0.2342
74	SLV 13	0.28148	-0.38974	0.13967	0.1859	0.02	0.2342
70	SLV 13	0.27747	-0.3898	0.13571	0.1783	0.0194	0.237

Spostamenti nodali con componente Uy minima

Vengono mostrati i soli 5 nodi più sollecitati.

Nodo	Cont.	Spostamento			Rotazione		
Ind.	N.br.	ux	uy	uz	rx	ry	rz
113	SLV 5	-0.07023	-3.5343	-0.37707	2.553	0.0243	0
123	SLV 5	-0.07023	-3.53429	-0.37635	2.5537	0.0243	0
114	SLV 5	-0.07152	-3.53363	-0.37611	2.5512	0.0247	0
122	SLV 5	-0.07152	-3.53361	-0.37611	2.5513	0.0247	0
115	SLV 5	-0.07145	-3.53227	-0.37607	2.5471	0.0247	0

Spostamenti nodali con componente Uy massima

Vengono mostrati i soli 5 nodi più sollecitati.

Nodo	Cont.	Spostamento			Rotazione		
Ind.	N.br.	ux	uy	uz	rx	ry	rz
123	SLV 11	0.07023	3.5343	-0.37707	-2.553	-0.0243	0
113	Y SLV	0	3.5343	0.00036	-2.5534	0	0
122	SLV 11	0.07152	3.53363	-0.37611	-2.5512	-0.0247	0
114	Y SLV	0	3.53362	0	-2.5513	0	0
121	SLV 11	0.07145	3.53227	-0.37607	-2.5471	-0.0247	0

Spostamenti nodali con componente Uz minima

Vengono mostrati i soli 5 nodi più sollecitati.

Nodo	Cont.	Spostamento			Rotazione		
Ind.	N.br.	ux	uy	uz	rx	ry	rz
114	SLU 99	0.00052	-0.0004	-1.39417	0.0001	-0.0002	0
115	SLU 99	0.00049	-0.00039	-0.99904	0.0002	-0.0002	0
113	SLU 97	0.00016	-0.00042	-0.94394	-0.0004	-0.0001	0
121	SLU 99	0.00121	-0.00038	-0.65275	0.0001	-0.0006	0
122	SLU 99	0.00071	-0.00038	-0.65274	0.0002	-0.0004	0

Spostamenti nodali con componente Uz massima

Vengono mostrati i soli 5 nodi più sollecitati.

Nodo	Cont.	Spostamento			Rotazione		
Ind.	N.br.	ux	uy	uz	rx	ry	rz
31	SLV 15	0.17955	0.00749	0.32632	0.0802	-0.004	-0.003
30	SLV 3	-0.17955	0.00749	0.32632	0.0802	0.004	0.003
62	SLV 1	-0.17955	-0.00749	0.32632	-0.0802	0.004	-0.003
63	SLV 13	0.17955	-0.00749	0.32632	-0.0802	-0.004	0.003
59	SLV 15	0.17939	0.00968	0.32602	0.077	-0.004	-0.003

8.2.2 Spostamenti nodali in condizioni di carico

***Nodo**: nodo interessato dallo spostamento.*
***Ind.**: indice del nodo.*
***Cont.**: condizione o combinazione di carico a cui si riferisce lo spostamento.*
***N.br.**: nome breve della condizione o combinazione di carico.*
***Spostamento**: spostamento traslazionale del nodo.*
***ux**: componente X dello spostamento del nodo. [cm]*
***uy**: componente Y dello spostamento del nodo. [cm]*
***uz**: componente Z dello spostamento del nodo. [cm]*
***Rotazione**: spostamento rotazionale del nodo.*
***rx**: componente X della rotazione del nodo. [deg]*
***ry**: componente Y della rotazione del nodo. [deg]*
***rz**: componente Z della rotazione del nodo. [deg]*

Nodo	Cont.	Spostamento			Rotazione		
Ind.	N.br.	ux	uy	uz	rx	ry	rz
2	Pesi	0	0	0	0.0057	0	0.007
2	Eccezione SdC3	0	0	0	0.0016	-0.0121	0.0016
2	Neve	0	0	0	0.0003	-0.0012	0.0003
2	X SLV	0	0	0	-0.0003	0.0982	-0.0008
2	Y SLV	0	0	0	0.7712	0	1.8019
2	X SLD	0	0	0	-0.0001	0.0439	-0.0004
2	Y SLD	0	0	0	0.2924	0	0.6832
2	X SLO	0	0	0	-0.0002	0.0536	-0.0005
2	Y SLO	0	0	0	0.3165	0	0.7394
3	Pesi	0	0	0	0.0057	0	-0.007
3	Eccezione SdC3	0	0	0	0.0016	0.0122	-0.0016
3	Neve	0	0	0	0.0003	0.0012	-0.0003
3	X SLV	0	0	0	0.0003	0.0982	-0.0008
3	Y SLV	0	0	0	0.7712	0	-1.8019
3	X SLD	0	0	0	0.0001	0.0439	-0.0004
3	Y SLD	0	0	0	0.2924	0	-0.6832
3	X SLO	0	0	0	0.0002	0.0536	-0.0005
3	Y SLO	0	0	0	0.3165	0	-0.7394
4	Pesi	0	0	0	0.0025	-0.0006	0.0037
4	Eccezione SdC3	0	0	0	0.0007	-0.0245	0.0009
4	Neve	0	0	0	0.0001	-0.0024	0.0001
4	X SLV	0	0	0	0.0001	0.1	0.0002
4	Y SLV	0	0	0	0.7817	0	1.8261
4	X SLD	0	0	0	0	0.0447	0.0001
4	Y SLD	0	0	0	0.2964	0	0.6923
4	X SLO	0	0	0	0.0001	0.0545	0.0001
4	Y SLO	0	0	0	0.3208	0	0.7493
5	Pesi	0	0	0	0.0025	0.0006	-0.0037
5	Eccezione SdC3	0	0	0	0.0007	0.0247	-0.0009
5	Neve	0	0	0	0.0001	0.0025	-0.0001
5	X SLV	0	0	0	-0.0001	0.1	0.0002
5	Y SLV	0	0	0	0.7817	0	-1.8261
5	X SLD	0	0	0	0	0.0447	0.0001
5	Y SLD	0	0	0	0.2964	0	-0.6923
5	X SLO	0	0	0	-0.0001	0.0545	0.0001
5	Y SLO	0	0	0	0.3208	0	-0.7493
6	Pesi	0	0	0	0.0017	-0.0006	0.0032
6	Eccezione SdC3	0	0	0	0.0013	-0.0134	0.0028
6	Neve	0	0	0	0.0002	-0.0017	0.0003
6	Eccezionale SdC1	0	0	0	0.0003	0	0.0007
6	X SLV	0	0	0	-0.0048	0.0999	-0.0113
6	Y SLV	0	0	0	0.7816	0	1.8259
6	X SLD	0	0	0	-0.0022	0.0447	-0.0051
6	Y SLD	0	0	0	0.2963	0	0.6923
6	X SLO	0	0	0	-0.0026	0.0545	-0.0062
6	Y SLO	0	0	0	0.3207	0	0.7492
7	Pesi	0	0	0	0.0017	0.0006	-0.0032
7	Eccezione SdC3	0	0	0	0.0013	0.0136	-0.0028
7	Neve	0	0	0	0.0002	0.0018	-0.0003
7	Eccezionale SdC1	0	0	0	0.0003	0	-0.0007
7	X SLV	0	0	0	0.0048	0.0999	-0.0113
7	Y SLV	0	0	0	0.7816	0	-1.8259
7	X SLD	0	0	0	0.0022	0.0447	-0.0051
7	Y SLD	0	0	0	0.2963	0	-0.6923
7	X SLO	0	0	0	0.0026	0.0545	-0.0062
7	Y SLO	0	0	0	0.3207	0	-0.7492
8	Pesi	0	0	0	0.0006	0.0024	0.0012
8	Eccezione SdC3	0	0	0	0.0003	-0.0002	0.0005
8	Eccezionale SdC1	0	0	0	0.0002	-0.0147	0.0006
8	X SLV	0	0	0	-0.0021	0.0107	-0.005
8	Y SLV	0	0	0	0.7621	0	1.7815
8	X SLD	0	0	0	-0.001	0.005	-0.0023
8	Y SLD	0	0	0	0.2889	0	0.6755
8	X SLO	0	0	0	-0.0012	0.0061	-0.0028
8	Y SLO	0	0	0	0.3127	0	0.731
9	Pesi	0	0	0	0.0006	-0.0024	-0.0012
9	Eccezione SdC3	0	0	0	0.0003	0.0002	-0.0005
9	Eccezionale SdC1	0	0	0	0.0002	0.0147	-0.0006
9	X SLV	0	0	0	0.0021	0.0107	-0.005
9	Y SLV	0	0	0	0.7621	0	-1.7815
9	X SLD	0	0	0	0.001	0.005	-0.0023
9	Y SLD	0	0	0	0.2889	0	-0.6755
9	X SLO	0	0	0	0.0012	0.0061	-0.0028
9	Y SLO	0	0	0	0.3127	0	-0.731
10	Pesi	0	0	0	0.0001	0.0024	0.0001
10	Eccezionale SdC1	0	0	0	0.0002	-0.0293	0.0005
10	X SLV	0	0	0	0	0.0108	0
10	Y SLV	0	0	0	0.7619	0	1.7813
10	X SLD	0	0	0	0	0.005	0
10	Y SLD	0	0	0	0.2889	0	0.6754
10	X SLO	0	0	0	0	0.0061	0
10	Y SLO	0	0	0	0.3126	0	0.7309
11	Pesi	0	0	0	0.0001	-0.0024	-0.0001
11	Eccezionale SdC1	0	0	0	0.0002	0.0293	-0.0005
11	X SLV	0	0	0	0	0.0108	0
11	Y SLV	0	0	0	0.7619	0	-1.7813
11	X SLD	0	0	0	0	0.005	0
11	Y SLD	0	0	0	0.2889	0	-0.6754
11	X SLO	0	0	0	0	0.0061	0
11	Y SLO	0	0	0	0.3126	0	-0.7309
12	Pesi	0	0	0	0	0.0024	0
12	Neve	0	0	0	0	-0.0007	0
12	Eccezionale SdC1	0	0	0	0.0002	-0.0378	0.0004

Nodo	Cont.	Spostamento			Rotazione		
Ind.	N.br.	ux	uy	uz	rx	ry	rz
12	X SLV	0	0	0	0	0.0108	0
12	Y SLV	0	0	0	0.7619	0	1.7813
12	X SLD	0	0	0	0	0.005	0
12	Y SLD	0	0	0	0.2889	0	0.6754
12	X SLO	0	0	0	0	0.0061	0
12	Y SLO	0	0	0	0.3126	0	0.7309
13	Pesi	0	0	0	0	-0.0024	0
13	Eccezionale SdC1	0	0	0	0.0002	0.0378	-0.0004
13	X SLV	0	0	0	0	0.0108	0
13	Y SLV	0	0	0	0.7619	0	-1.7813
13	X SLD	0	0	0	0	0.005	0
13	Y SLD	0	0	0	0.2889	0	-0.6754
13	X SLO	0	0	0	0	0.0061	0
13	Y SLO	0	0	0	0.3126	0	-0.7309
14	Pesi	0	0	0	-0.0001	0.0024	-0.0001
14	Neve	0	0	0	0	-0.0007	0
14	Eccezionale SdC1	0	0	0	-0.0001	-0.0462	-0.0003
14	X SLV	0	0	0	0	0.0108	0
14	Y SLV	0	0	0	0.7619	0	1.7813
14	X SLD	0	0	0	0	0.005	0
14	Y SLD	0	0	0	0.2889	0	0.6754
14	X SLO	0	0	0	0	0.0061	0
14	Y SLO	0	0	0	0.3126	0	0.7309
15	Pesi	0	0	0	-0.0001	-0.0024	0.0001
15	Neve	0	0	0	0	0.0007	0
15	Eccezionale SdC1	0	0	0	-0.0001	0.0462	0.0003
15	X SLV	0	0	0	0	0.0108	0
15	Y SLV	0	0	0	0.7619	0	-1.7813
15	X SLD	0	0	0	0	0.005	0
15	Y SLD	0	0	0	0.2889	0	-0.6754
15	X SLO	0	0	0	0	0.0061	0
15	Y SLO	0	0	0	0.3126	0	-0.7309
16	Pesi	0	0	0	-0.0006	0.0024	-0.0012
16	Neve	0	0	0	-0.0001	-0.0007	-0.0001
16	Eccezionale SdC1	0	0	0	-0.0004	-0.0231	-0.001
16	X SLV	0	0	0	0.0021	0.0107	0.005
16	Y SLV	0	0	0	0.7621	0	1.7815
16	X SLD	0	0	0	0.001	0.005	0.0023
16	Y SLD	0	0	0	0.2889	0	0.6755
16	X SLO	0	0	0	0.0012	0.0061	0.0028
16	Y SLO	0	0	0	0.3127	0	0.731
17	Pesi	0	0	0	-0.0006	-0.0024	0.0012
17	Neve	0	0	0	-0.0001	0.0007	0.0002
17	Eccezionale SdC1	0	0	0	-0.0004	0.0231	0.001
17	X SLV	0	0	0	-0.0021	0.0107	0.005
17	Y SLV	0	0	0	0.7621	0	-1.7815
17	X SLD	0	0	0	-0.001	0.005	0.0023
17	Y SLD	0	0	0	0.2889	0	-0.6755
17	X SLO	0	0	0	-0.0012	0.0061	0.0028
17	Y SLO	0	0	0	0.3127	0	-0.731
18	Pesi	0	0	0	-0.0017	-0.0006	-0.0032
18	Eccezione SdC3	0	0	0	-0.0003	-0.0021	-0.0005
18	Neve	0	0	0	-0.0002	-0.0023	-0.0003
18	Eccezionale SdC4	0	0	0	-0.0001	-0.0019	-0.0002
18	Eccezionale SdC1	0	0	0	-0.0005	0	-0.0012
18	X SLV	0	0	0	0.0048	0.0999	0.0113
18	Y SLV	0	0	0	0.7816	0	1.8259
18	X SLD	0	0	0	0.0022	0.0447	0.0051
18	Y SLD	0	0	0	0.2963	0	0.6923
18	X SLO	0	0	0	0.0026	0.0545	0.0062
18	Y SLO	0	0	0	0.3207	0	0.7492
19	Pesi	0	0	0	-0.0017	0.0006	0.0032
19	Eccezione SdC3	0	0	0	-0.0003	0.0027	0.0006
19	Neve	0	0	0	-0.0002	0.0026	0.0004
19	Eccezionale SdC4	0	0	0	-0.0001	0.0019	0.0002
19	Eccezionale SdC1	0	0	0	-0.0005	0	0.0012
19	X SLV	0	0	0	-0.0048	0.0999	0.0113
19	Y SLV	0	0	0	0.7816	0	-1.8259
19	X SLD	0	0	0	-0.0022	0.0447	0.0051
19	Y SLD	0	0	0	0.2963	0	-0.6923
19	X SLO	0	0	0	-0.0026	0.0545	0.0062
19	Y SLO	0	0	0	0.3207	0	-0.7492
20	Pesi	0	0	0	-0.0025	-0.0006	-0.0037
20	Eccezione SdC3	0	0	0	-0.0002	-0.0022	-0.0004
20	Neve	0	0	0	-0.0001	-0.0024	-0.0001
20	Eccezionale SdC4	0	0	0	0	-0.0019	0
20	X SLV	0	0	0	-0.0001	0.1	-0.0002
20	Y SLV	0	0	0	0.7817	0	1.8261
20	X SLD	0	0	0	0	0.0447	-0.0001
20	Y SLD	0	0	0	0.2964	0	0.6923
20	X SLO	0	0	0	-0.0001	0.0545	-0.0001
20	Y SLO	0	0	0	0.3208	0	0.7493
21	Pesi	0	0	0	-0.0025	0.0006	0.0037
21	Eccezione SdC3	0	0	0	-0.0002	0.0025	0.0004
21	Neve	0	0	0	-0.0001	0.0025	0
21	Eccezionale SdC4	0	0	0	0	0.0019	0
21	X SLV	0	0	0	0.0001	0.1	-0.0002
21	Y SLV	0	0	0	0.7817	0	-1.8261
21	X SLD	0	0	0	0	0.0447	-0.0001
21	Y SLD	0	0	0	0.2964	0	-0.6923
21	X SLO	0	0	0	0.0001	0.0545	-0.0001
21	Y SLO	0	0	0	0.3208	0	-0.7493
22	Pesi	0	0	0	-0.0057	0	-0.007
22	Eccezione SdC3	0	0	0	-0.0005	-0.001	-0.0007
22	Neve	0	0	0	-0.0003	-0.0011	-0.0003

Nodo	Cont.	Spostamento			Rotazione		
Ind.	N.br.	ux	uy	uz	rx	ry	rz
22	Eccezionale SdC4	0	0	0	-0.0001	-0.0009	-0.0001
22	X SLV	0	0	0	0.0003	0.0982	0.0008
22	Y SLV	0	0	0	0.7712	0	1.8019
22	X SLD	0	0	0	0.0001	0.0439	0.0004
22	Y SLD	0	0	0	0.2924	0	0.6832
22	X SLO	0	0	0	0.0002	0.0536	0.0005
22	Y SLO	0	0	0	0.3165	0	0.7394
23	Pesi	0	0	0	-0.0057	0	0.007
23	Eccezione SdC3	0	0	0	-0.0005	0.0013	0.0007
23	Neve	0	0	0	-0.0003	0.0012	0.0003
23	Eccezionale SdC4	0	0	0	-0.0001	0.0009	0.0001
23	X SLV	0	0	0	-0.0003	0.0982	0.0008
23	Y SLV	0	0	0	0.7712	0	-1.8019
23	X SLD	0	0	0	-0.0001	0.0439	0.0004
23	Y SLD	0	0	0	0.2924	0	-0.6832
23	X SLO	0	0	0	-0.0002	0.0536	0.0005
23	Y SLO	0	0	0	0.3165	0	-0.7394
24	Pesi	-0.02394	-0.00462	-0.0096	0.0072	-0.0101	0.0111
24	Eccezione SdC3	-0.02279	-0.00158	0.00291	0.0024	-0.0101	0.0036
24	Neve	-0.00227	-0.00022	0.00004	0.0003	-0.0009	0.0005
24	X SLV	0.16822	-0.00004	-0.07166	0	0.0902	0.0001
24	Y SLV	0	0.00169	0.00024	0.8904	0	2.1315
24	X SLD	0.0753	-0.00002	-0.03208	0	0.0404	0
24	Y SLD	0	0.00064	0.00009	0.3376	0	0.8082
24	X SLO	0.09177	-0.00002	-0.03909	0	0.0492	0
24	Y SLO	0	0.00069	0.0001	0.3654	0	0.8746
25	Pesi	-0.01289	-0.00451	0.02667	0.0018	-0.0094	0
25	Eccezione SdC3	-0.01389	-0.00155	0.03508	0.0005	-0.0092	0
25	Neve	-0.00131	-0.00021	0.00314	0.0001	-0.0009	0
25	X SLV	0.1635	-0.00002	-0.29367	-0.0001	-0.0129	0
25	Y SLV	-0.00001	0.03054	0.00006	0.2595	0.0001	0.01
25	X SLD	0.07319	-0.00001	-0.13146	-0.0001	-0.0058	0
25	Y SLD	0	0.01158	0.00002	0.0984	0	0.0038
25	X SLO	0.0892	-0.00001	-0.16021	-0.0001	-0.007	0
25	Y SLO	0	0.01253	0.00002	0.1065	0	0.0041
26	Pesi	0.01289	-0.00451	0.02667	0.0018	0.0094	0
26	Eccezione SdC3	0.014	-0.00155	0.03529	0.0005	0.0092	0
26	Neve	0.00136	-0.00021	0.00324	0.0001	0.0009	0
26	X SLV	0.1635	0.00002	0.29367	0.0001	-0.0129	0
26	Y SLV	0.00001	0.03054	0.00006	0.2595	-0.0001	-0.01
26	X SLD	0.07319	0.00001	0.13146	0.0001	-0.0058	0
26	Y SLD	0	0.01158	0.00002	0.0984	0	-0.0038
26	X SLO	0.0892	0.00001	0.16021	0.0001	-0.007	0
26	Y SLO	0	0.01253	0.00002	0.1065	0	-0.0041
27	Pesi	0.02394	-0.00462	-0.0096	0.0072	0.0101	-0.0111
27	Eccezione SdC3	0.0229	-0.00158	0.00296	0.0024	0.0102	-0.0035
27	Neve	0.00232	-0.00022	0.00006	0.0003	0.0009	-0.0005
27	X SLV	0.16822	0.00004	0.07166	0	0.0902	0.0001
27	Y SLV	0	0.00169	0.00024	0.8904	0	-2.1315
27	X SLD	0.0753	0.00002	0.03208	0	0.0404	0
27	Y SLD	0	0.00064	0.00009	0.3376	0	-0.8082
27	X SLO	0.09177	0.00002	0.03909	0	0.0492	0
27	Y SLO	0	0.00069	0.0001	0.3654	0	-0.8746
28	Pesi	-0.02402	-0.00314	-0.01072	0.0005	-0.01	0
28	Eccezione SdC3	-0.03416	-0.00108	-0.00405	0.0012	-0.0152	0.0065
28	Neve	-0.00338	-0.00015	-0.00421	0.0001	-0.0013	0.0006
28	X SLV	0.17034	-0.00003	-0.0723	-0.0004	0.091	-0.001
28	Y SLV	0	0.00153	0.00012	-0.0001	0	0
28	X SLD	0.07625	-0.00001	-0.03237	-0.0002	0.0407	-0.0004
28	X SLO	0.09293	-0.00002	-0.03944	-0.0002	0.0496	-0.0005
29	Pesi	-0.0241	-0.00167	-0.00778	0.0026	-0.01	0.004
29	Eccezione SdC3	-0.04553	-0.00057	0.00711	0.0008	-0.0202	0.0011
29	Neve	-0.0045	-0.00008	0.00024	0.0001	-0.0018	0.0002
29	X SLV	0.1713	-0.00002	-0.07295	0	0.0918	0
29	Y SLV	0	0.00137	0	0.8908	0	2.1322
29	X SLD	0.07668	-0.00001	-0.03266	0	0.0411	0
29	Y SLD	0	0.00052	0	0.3377	0	0.8084
29	X SLO	0.09345	-0.00001	-0.0398	0	0.0501	0
29	Y SLO	0	0.00056	0	0.3655	0	0.8749
30	Pesi	-0.01305	-0.00162	0.02726	0.0009	-0.0091	0
30	Eccezione SdC3	-0.02776	-0.00056	0.07036	0.0003	-0.0182	0
30	Neve	-0.00259	-0.00008	0.00627	0	-0.0018	0
30	X SLV	0.1665	-0.00001	-0.29906	0	-0.0131	0
30	Y SLV	0	0.03034	0	0.2642	0	0.01
30	X SLD	0.07453	0	-0.13387	0	-0.0059	0
30	Y SLD	0	0.0115	0	0.1002	0	0.0038
30	X SLO	0.09083	0	-0.16315	0	-0.0071	0
30	Y SLO	0	0.01245	0	0.1084	0	0.0041
31	Pesi	0.01305	-0.00162	0.02726	0.0009	0.0091	0
31	Eccezione SdC3	0.02815	-0.00056	0.07106	0.0003	0.0182	0
31	Neve	0.00278	-0.00008	0.0066	0	0.0018	0
31	X SLV	0.1665	0.00001	0.29906	0	-0.0131	0
31	Y SLV	0	0.03034	0	0.2642	0	-0.01
31	X SLD	0.07453	0	0.13387	0	-0.0059	0
31	Y SLD	0	0.0115	0	0.1002	0	-0.0038
31	X SLO	0.09083	0	0.16315	0	-0.0071	0
31	Y SLO	0	0.01245	0	0.1084	0	-0.0041
32	Pesi	0.0241	-0.00167	-0.00778	0.0026	0.01	-0.004
32	Eccezione SdC3	0.04592	-0.00057	0.00729	0.0008	0.0204	-0.0011
32	Neve	0.00469	-0.00008	0.00033	0.0001	0.0019	-0.0002
32	X SLV	0.1713	0.00002	0.07295	0	0.0918	0
32	Y SLV	0	0.00137	0	0.8908	0	-2.1322
32	X SLD	0.07668	0.00001	0.03266	0	0.0411	0
32	Y SLD	0	0.00052	0	0.3377	0	-0.8084
32	X SLO	0.09345	0.00001	0.0398	0	0.0501	0

Nodo	Cont.	Spostamento			Rotazione		
Ind.	N.br.	ux	uy	uz	rx	ry	rz
32	Y SLO	0	0.00056	0	0.3655	0	-0.8749
33	Pesi	-0.0241	-0.00059	-0.00778	0.0009	-0.01	0.0014
33	Eccezione SdC3	-0.02501	-0.0002	0.00336	0.0002	-0.0108	0.0002
33	Neve	-0.00333	-0.00003	0.00003	0	-0.0012	0.0001
33	X SLV	0.17114	-0.00001	-0.07288	0.0001	0.0917	0.0001
33	Y SLV	0	0.0014	0	0.8907	0	2.132
33	X SLD	0.07661	0	-0.03262	0	0.041	0
33	Y SLD	0	0.00053	0	0.3377	0	0.8083
33	X SLO	0.09336	0	-0.03976	0	0.05	0
33	Y SLO	0	0.00058	0	0.3655	0	0.8748
34	Pesi	-0.01305	-0.00057	0.02725	0.0007	-0.0091	0
34	Eccezione SdC3	-0.01508	-0.00019	0.03784	0.0006	-0.0099	0
34	Neve	-0.00187	-0.00003	0.00441	0.0001	-0.0013	0
34	X SLV	0.16634	0	-0.29876	-0.0016	-0.0131	0
34	Y SLV	0	0.03037	0	0.2643	0	0.01
34	X SLD	0.07446	0	-0.13373	-0.0007	-0.0059	0
34	Y SLD	0	0.01151	0	0.1002	0	0.0038
34	X SLO	0.09074	0	-0.16299	-0.0009	-0.0071	0
34	Y SLO	0	0.01246	0	0.1085	0	0.0041
35	Pesi	0.01305	-0.00057	0.02725	0.0007	0.0091	0
35	Eccezione SdC3	0.01544	-0.00019	0.03849	0.0006	0.0099	0
35	Neve	0.00204	-0.00003	0.00472	0.0001	0.0013	0
35	X SLV	0.16634	0	0.29876	0.0016	-0.0131	0
35	Y SLV	0	0.03037	0	0.2643	0	-0.01
35	X SLD	0.07446	0	0.13373	0.0007	-0.0059	0
35	Y SLD	0	0.01151	0	0.1002	0	-0.0038
35	X SLO	0.09074	0	0.16299	0.0009	-0.0071	0
35	Y SLO	0	0.01246	0	0.1085	0	-0.0041
36	Pesi	0.0241	-0.00059	-0.00778	0.0009	0.01	-0.0014
36	Eccezione SdC3	0.02538	-0.0002	0.00354	0.0002	0.011	-0.0002
36	Neve	0.0035	-0.00003	0.00011	0	0.0013	-0.0001
36	X SLV	0.17114	0.00001	0.07288	-0.0001	0.0917	0.0001
36	Y SLV	0	0.0014	0	0.8907	0	-2.132
36	X SLD	0.07661	0	0.03262	0	0.041	0
36	Y SLD	0	0.00053	0	0.3377	0	-0.8083
36	X SLO	0.09336	0	0.03976	0	0.05	0
36	Y SLO	0	0.00058	0	0.3655	0	-0.8748
37	Pesi	-0.00422	-0.00019	-0.00754	0.0003	0.0051	0.0004
37	Eccezione SdC3	-0.00048	-0.00007	-0.00069	0	0.0006	-0.0001
37	Eccezionale SdC1	-0.02367	0	0.0035	0	0.0051	0
37	X SLV	0.01764	0	-0.00768	0	0.0061	0
37	Y SLV	0	0.0018	0	0.89	0	2.1301
37	X SLD	0.00819	0	-0.00357	0	0.0028	0
37	Y SLD	0	0.00068	0	0.3374	0	0.8076
37	X SLO	0.00996	0	-0.00434	0	0.0034	0
37	Y SLO	0	0.00074	0	0.3652	0	0.874
38	Pesi	-0.00138	-0.00009	-0.02357	0	0.0081	0
38	Eccezione SdC3	-0.00008	-0.00006	-0.00226	0.0001	0.0006	0
38	Neve	-0.00026	0	-0.00147	0	0.0006	0
38	Eccezionale SdC1	-0.01555	0.00001	-0.0267	0	0.02	0
38	X SLV	0.017	-0.00002	-0.01501	0	-0.0017	0
38	Y SLV	0	0.01759	0	-1.8682	0	0.019
38	X SLD	0.00789	-0.00001	-0.00696	0	-0.0008	0
38	Y SLD	0	0.00667	0	-0.7083	0	0.0072
38	X SLO	0.0096	-0.00001	-0.00847	0	-0.0009	0
38	Y SLO	0	0.00722	0	-0.7666	0	0.0078
39	Pesi	0.00138	-0.00009	-0.02357	0	-0.0081	0
39	Eccezione SdC3	0.00009	-0.00006	-0.00226	0.0001	-0.0006	0
39	Neve	0.00026	0	-0.00147	0	-0.0006	0
39	Eccezionale SdC1	0.01555	0.00001	-0.0267	0	-0.02	0
39	X SLV	0.017	0.00002	0.01501	0	-0.0017	0
39	Y SLV	0	0.01759	0	-1.8682	0	-0.019
39	X SLD	0.00789	0.00001	0.00696	0	-0.0008	0
39	Y SLD	0	0.00667	0	-0.7083	0	-0.0072
39	X SLO	0.0096	0.00001	0.00847	0	-0.0009	0
39	Y SLO	0	0.00722	0	-0.7666	0	-0.0078
40	Pesi	0.00422	-0.00019	-0.00754	0.0003	-0.0051	-0.0004
40	Eccezione SdC3	0.00048	-0.00007	-0.00069	0	-0.0006	0.0001
40	Eccezionale SdC1	0.02367	0	0.0035	0	-0.0051	0
40	X SLV	0.01764	0	0.00768	0	0.0061	0
40	Y SLV	0	0.0018	0	0.89	0	-2.1301
40	X SLD	0.00819	0	0.00357	0	0.0028	0
40	Y SLD	0	0.00068	0	0.3374	0	-0.8076
40	X SLO	0.00996	0	0.00434	0	0.0034	0
40	Y SLO	0	0.00074	0	0.3652	0	-0.874
41	Pesi	-0.00426	-0.00007	-0.00757	0.0001	0.0051	0.0001
41	Eccezionale SdC1	-0.04734	0	0.007	0	0.0102	0
41	X SLV	0.01772	0	-0.00772	0	0.0061	0
41	Y SLV	0	0.0019	0	0.8898	0	2.1298
41	X SLD	0.00822	0	-0.00358	0	0.0028	0
41	Y SLD	0	0.00072	0	0.3374	0	0.8075
41	X SLO	0.01	0	-0.00436	0	0.0034	0
41	Y SLO	0	0.00078	0	0.3651	0	0.8739
42	Pesi	-0.00139	-0.00004	-0.02369	0	0.0081	0
42	Eccezione SdC3	-0.00012	-0.00005	-0.0016	0.0001	0.0003	0
42	Neve	-0.0005	0	-0.00153	0	0.0007	0
42	Eccezionale SdC1	-0.03111	0.00001	-0.0534	0	0.04	0
42	X SLV	0.01708	0	-0.01507	0	-0.0017	0
42	Y SLV	0	0.01825	0	-1.8673	0	0.0192
42	X SLD	0.00793	0	-0.007	0	-0.0008	0
42	Y SLD	0	0.00692	0	-0.708	0	0.0073
42	X SLO	0.00964	0	-0.00851	0	-0.0009	0
42	Y SLO	0	0.00749	0	-0.7662	0	0.0079
43	Pesi	0.00139	-0.00004	-0.02369	0	-0.0081	0
43	Eccezione SdC3	-0.00042	-0.00005	-0.00212	0.0001	-0.0004	0

Nodo	Cont.	Spostamento			Rotazione		
Ind.	N.br.	ux	uy	uz	rx	ry	rz
43	Neve	0.00025	0	-0.00179	0	-0.0007	0
43	Eccezionale SdC1	0.03111	0.00001	-0.0534	0	-0.04	0
43	X SLV	0.01708	0	0.01507	0	-0.0017	0
43	Y SLV	0	0.01825	0	-1.8673	0	-0.0192
43	X SLD	0.00793	0	0.007	0	-0.0008	0
43	Y SLD	0	0.00692	0	-0.708	0	-0.0073
43	X SLO	0.00964	0	0.00851	0	-0.0009	0
43	Y SLO	0	0.00749	0	-0.7662	0	-0.0079
44	Pesi	0.00426	-0.00007	-0.00757	0.0001	-0.0051	-0.0001
44	Eccezione SdC3	-0.00003	-0.00003	-0.00086	-0.0001	-0.0007	0.0002
44	Eccezionale SdC1	0.04734	0	0.007	0	-0.0102	0
44	X SLV	0.01772	0	0.00772	0	0.0061	0
44	Y SLV	0	0.0019	0	0.8898	0	-2.1298
44	X SLD	0.00822	0	0.00358	0	0.0028	0
44	Y SLD	0	0.00072	0	0.3374	0	-0.8075
44	X SLO	0.01	0	0.00436	0	0.0034	0
44	Y SLO	0	0.00078	0	0.3651	0	-0.8739
45	Pesi	-0.00426	0	-0.00757	0	0.0051	0
45	Neve	-0.00115	0	-0.00015	0	0.0004	0
45	Eccezionale SdC1	-0.06131	0	0.00769	0	0.0141	0
45	X SLV	0.01772	0	-0.00772	0	0.0061	0
45	Y SLV	0	0.00193	0	0.8898	0	2.1297
45	X SLD	0.00822	0	-0.00358	0	0.0028	0
45	Y SLD	0	0.00073	0	0.3374	0	0.8075
45	X SLO	0.01	0	-0.00436	0	0.0034	0
45	Y SLO	0	0.00079	0	0.3651	0	0.8739
46	Pesi	-0.00139	0	-0.02369	0	0.0081	0
46	Neve	-0.00072	0	-0.00192	0	0.001	0
46	Eccezionale SdC1	-0.03987	0.00001	-0.07226	0	0.0522	0
46	X SLV	0.01708	0	-0.01507	0	-0.0017	0
46	Y SLV	0	0.01847	0	-1.867	0	0.0192
46	X SLD	0.00793	0	-0.007	0	-0.0008	0
46	Y SLD	0	0.007	0	-0.7079	0	0.0073
46	X SLO	0.00964	0	-0.00851	0	-0.0009	0
46	Y SLO	0	0.00758	0	-0.7661	0	0.0079
47	Pesi	0.00139	0	-0.02369	0	-0.0081	0
47	Eccezione SdC3	-0.00023	-0.00004	-0.00139	0.0001	-0.0004	0
47	Neve	0.00047	0	-0.00217	0	-0.001	0
47	Eccezionale SdC1	0.03987	0.00001	-0.07226	0	-0.0522	0
47	X SLV	0.01708	0	0.01507	0	-0.0017	0
47	Y SLV	0	0.01847	0	-1.867	0	-0.0192
47	X SLD	0.00793	0	0.007	0	-0.0008	0
47	Y SLD	0	0.007	0	-0.7079	0	-0.0073
47	X SLO	0.00964	0	0.00851	0	-0.0009	0
47	Y SLO	0	0.00758	0	-0.7661	0	-0.0079
48	Pesi	0.00426	0	-0.00757	0	-0.0051	0
48	Neve	0.001	0	-0.00026	0	-0.0005	0
48	Eccezionale SdC1	0.06131	0	0.00769	0	-0.0141	0
48	X SLV	0.01772	0	0.00772	0	0.0061	0
48	Y SLV	0	0.00193	0	0.8898	0	-2.1297
48	X SLD	0.00822	0	0.00358	0	0.0028	0
48	Y SLD	0	0.00073	0	0.3374	0	-0.8075
48	X SLO	0.01	0	0.00436	0	0.0034	0
48	Y SLO	0	0.00079	0	0.3651	0	-0.8739
49	Pesi	-0.00426	0.00007	-0.00757	-0.0001	0.0051	-0.0001
49	Neve	-0.00125	0	-0.00018	0	0.0005	0
49	Eccezionale SdC1	-0.07525	0	0.00838	0	0.0179	0
49	X SLV	0.01772	0	-0.00772	0	0.0061	0
49	Y SLV	0	0.0019	0	0.8898	0	2.1298
49	X SLD	0.00822	0	-0.00358	0	0.0028	0
49	Y SLD	0	0.00072	0	0.3374	0	0.8075
49	X SLO	0.01	0	-0.00436	0	0.0034	0
49	Y SLO	0	0.00078	0	0.3651	0	0.8739
50	Pesi	-0.00139	0.00004	-0.02369	0	0.0081	0
50	Neve	-0.00071	0	-0.00223	0	0.0012	0
50	Eccezionale SdC1	-0.04862	-0.00001	-0.0911	0	0.0644	0
50	X SLV	0.01708	0	-0.01507	0	-0.0017	0
50	Y SLV	0	0.01825	0	-1.8673	0	0.0192
50	X SLD	0.00793	0	-0.007	0	-0.0008	0
50	Y SLD	0	0.00692	0	-0.708	0	0.0073
50	X SLO	0.00964	0	-0.00851	0	-0.0009	0
50	Y SLO	0	0.00749	0	-0.7662	0	0.0079
51	Pesi	0.00139	0.00004	-0.02369	0	-0.0081	0
51	Neve	0.00071	0	-0.00223	0	-0.0012	0
51	Eccezionale SdC1	0.04862	-0.00001	-0.0911	0	-0.0644	0
51	X SLV	0.01708	0	0.01507	0	-0.0017	0
51	Y SLV	0	0.01825	0	-1.8673	0	-0.0192
51	X SLD	0.00793	0	0.007	0	-0.0008	0
51	Y SLD	0	0.00692	0	-0.708	0	-0.0073
51	X SLO	0.00964	0	0.00851	0	-0.0009	0
51	Y SLO	0	0.00749	0	-0.7662	0	-0.0079
52	Pesi	0.00426	0.00007	-0.00757	-0.0001	-0.0051	0.0001
52	Neve	0.00125	0	-0.00018	0	-0.0005	0
52	Eccezionale SdC1	0.07525	0	0.00838	0	-0.0179	0
52	X SLV	0.01772	0	0.00772	0	0.0061	0
52	Y SLV	0	0.0019	0	0.8898	0	-2.1298
52	X SLD	0.00822	0	0.00358	0	0.0028	0
52	Y SLD	0	0.00072	0	0.3374	0	-0.8075
52	X SLO	0.01	0	0.00436	0	0.0034	0
52	Y SLO	0	0.00078	0	0.3651	0	-0.8739
53	Pesi	-0.00422	0.00019	-0.00754	-0.0003	0.0051	-0.0004
53	Neve	-0.00125	0.00001	-0.00018	0	0.0005	0
53	Eccezionale SdC1	-0.03763	0	0.00419	0	0.009	-0.0001
53	X SLV	0.01764	0	-0.00768	0	0.0061	0
53	Y SLV	0	0.0018	0	0.89	0	2.1301

Nodo	Cont.	Spostamento			Rotazione		
Ind.	N.br.	ux	uy	uz	rx	ry	rz
53	X SLD	0.00819	0	-0.00357	0	0.0028	0
53	Y SLD	0	0.00068	0	0.3374	0	0.8076
53	X SLO	0.00996	0	-0.00434	0	0.0034	0
53	Y SLO	0	0.00074	0	0.3652	0	0.874
54	Pesi	-0.00138	0.00009	-0.02357	0	0.0081	0
54	Eccezione SdC3	-0.00027	-0.00003	-0.00154	0.0001	0.0006	0
54	Neve	-0.00071	0	-0.00224	0	0.0012	0
54	Eccezionale SdC1	-0.02431	-0.00002	-0.04554	0	0.0322	0
54	X SLV	0.017	0.00002	-0.01501	0	-0.0017	0
54	Y SLV	0	0.01759	0	-1.8682	0	0.019
54	X SLD	0.00789	0.00001	-0.00696	0	-0.0008	0
54	Y SLD	0	0.00667	0	-0.7083	0	0.0072
54	X SLO	0.0096	0.00001	-0.00847	0	-0.0009	0
54	Y SLO	0	0.00722	0	-0.7666	0	0.0078
55	Pesi	0.00138	0.00009	-0.02357	0	-0.0081	0
55	Eccezione SdC3	0.00028	-0.00003	-0.00153	0.0001	-0.0006	0
55	Neve	0.00071	0	-0.00223	0	-0.0012	0
55	Eccezionale SdC1	0.02431	-0.00002	-0.04554	0	-0.0322	0
55	X SLV	0.017	-0.00002	0.01501	0	-0.0017	0
55	Y SLV	0	0.01759	0	-1.8682	0	-0.019
55	X SLD	0.00789	-0.00001	0.00696	0	-0.0008	0
55	Y SLD	0	0.00667	0	-0.7083	0	-0.0072
55	X SLO	0.0096	-0.00001	0.00847	0	-0.0009	0
55	Y SLO	0	0.00722	0	-0.7666	0	-0.0078
56	Pesi	0.00422	0.00019	-0.00754	-0.0003	-0.0051	0.0004
56	Neve	0.00125	0.00001	-0.00018	0	-0.0005	0
56	Eccezionale SdC1	0.03763	0	0.00419	0	-0.009	0.0001
56	X SLV	0.01764	0	0.00768	0	0.0061	0
56	Y SLV	0	0.0018	0	0.89	0	-2.1301
56	X SLD	0.00819	0	0.00357	0	0.0028	0
56	Y SLD	0	0.00068	0	0.3374	0	-0.8076
56	X SLO	0.00996	0	0.00434	0	0.0034	0
56	Y SLO	0	0.00074	0	0.3652	0	-0.874
57	Pesi	-0.0241	0.00059	-0.00778	-0.0009	-0.01	-0.0014
57	Eccezione SdC3	-0.00423	0.00004	-0.0005	-0.0002	-0.0013	-0.0004
57	Neve	-0.00439	0.00003	0.00019	0	-0.0017	-0.0001
57	Eccezionale SdC4	-0.00348	0.00001	0.00064	0	-0.0016	0
57	X SLV	0.17114	0.00001	-0.07288	-0.0001	0.0917	-0.0001
57	Y SLV	0	0.0014	0	0.8907	0	2.132
57	X SLD	0.07661	0	-0.03262	0	0.041	0
57	Y SLD	0	0.00053	0	0.3377	0	0.8083
57	X SLO	0.09336	0	-0.03976	0	0.05	0
57	Y SLO	0	0.00058	0	0.3655	0	0.8748
58	Pesi	-0.01305	0.00057	0.02725	-0.0007	-0.0091	0
58	Eccezione SdC3	-0.00213	0.00003	0.00486	-0.0001	-0.0017	0
58	Neve	-0.00248	0.00003	0.00608	-0.0001	-0.0018	0
58	Eccezionale SdC4	-0.00215	0.00001	0.00552	0	-0.0014	0
58	X SLV	0.16634	0	-0.29876	0.0016	-0.0131	0
58	Y SLV	0	0.03037	0	0.2643	0	0.01
58	X SLD	0.07446	0	-0.13373	0.0007	-0.0059	0
58	Y SLD	0	0.01151	0	0.1002	0	0.0038
58	X SLO	0.09074	0	-0.16299	0.0009	-0.0071	0
58	Y SLO	0	0.01246	0	0.1085	0	0.0041
59	Pesi	0.01305	0.00057	0.02725	-0.0007	0.0091	0
59	Eccezione SdC3	0.00302	0.00003	0.00647	-0.0001	0.0017	0
59	Neve	0.00291	0.00003	0.00685	-0.0001	0.0017	0
59	Eccezionale SdC4	0.00215	0.00001	0.00552	0	0.0014	0
59	X SLV	0.16634	0	0.29876	-0.0016	-0.0131	0
59	Y SLV	0	0.03037	0	0.2643	0	-0.01
59	X SLD	0.07446	0	0.13373	-0.0007	-0.0059	0
59	Y SLD	0	0.01151	0	0.1002	0	-0.0038
59	X SLO	0.09074	0	0.16299	-0.0009	-0.0071	0
59	Y SLO	0	0.01246	0	0.1085	0	-0.0041
60	Pesi	0.0241	0.00059	-0.00778	-0.0009	0.01	0.0014
60	Eccezione SdC3	0.00513	0.00004	-0.00008	-0.0002	0.0018	0.0004
60	Neve	0.00482	0.00003	0.00039	0	0.002	0.0001
60	Eccezionale SdC4	0.00348	0.00001	0.00064	0	0.0016	0
60	X SLV	0.17114	-0.00001	0.07288	0.0001	0.0917	-0.0001
60	Y SLV	0	0.0014	0	0.8907	0	-2.132
60	X SLD	0.07661	0	0.03262	0	0.041	0
60	Y SLD	0	0.00053	0	0.3377	0	-0.8083
60	X SLO	0.09336	0	0.03976	0	0.05	0
60	Y SLO	0	0.00058	0	0.3655	0	-0.8748
61	Pesi	-0.0241	0.00167	-0.00778	-0.0026	-0.01	-0.004
61	Eccezione SdC3	-0.00443	0.00011	-0.00041	-0.0003	-0.0014	-0.0005
61	Neve	-0.00449	0.00008	0.00023	-0.0001	-0.0018	-0.0002
61	Eccezionale SdC4	-0.00348	0.00004	0.00064	-0.0001	-0.0016	-0.0001
61	X SLV	0.1713	0.00002	-0.07295	0	0.0918	0
61	Y SLV	0	0.00137	0	0.8908	0	2.1322
61	X SLD	0.07668	0.00001	-0.03266	0	0.0411	0
61	Y SLD	0	0.00052	0	0.3377	0	0.8084
61	X SLO	0.09345	0.00001	-0.0398	0	0.0501	0
61	Y SLO	0	0.00056	0	0.3655	0	0.8749
62	Pesi	-0.01305	0.00162	0.02726	-0.0009	-0.0091	0
62	Eccezione SdC3	-0.00232	0.0001	0.0052	0	-0.0017	0
62	Neve	-0.00258	0.00008	0.00624	0	-0.0018	0
62	Eccezionale SdC4	-0.00215	0.00004	0.00552	0	-0.0014	0
62	X SLV	0.1665	0.00001	-0.29906	0	-0.0131	0
62	Y SLV	0	0.03034	0	0.2642	0	0.01
62	X SLD	0.07453	0	-0.13387	0	-0.0059	0
62	Y SLD	0	0.0115	0	0.1002	0	0.0038
62	X SLO	0.09083	0	-0.16315	0	-0.0071	0
62	Y SLO	0	0.01245	0	0.1084	0	0.0041
63	Pesi	0.01305	0.00162	0.02726	-0.0009	0.0091	0
63	Eccezione SdC3	0.00281	0.0001	0.0061	0	0.0017	0

Nodo	Cont.	Spostamento			Rotazione		
Ind.	N.br.	ux	uy	uz	rx	ry	rz
63	Neve	0.00281	0.00008	0.00667	0	0.0018	0
63	Eccezionale SdC4	0.00215	0.00004	0.00552	0	0.0014	0
63	X SLV	0.1665	-0.00001	0.29906	0	-0.0131	0
63	Y SLV	0	0.03034	0	0.2642	0	-0.01
63	X SLD	0.07453	0	0.13387	0	-0.0059	0
63	Y SLD	0	0.0115	0	0.1002	0	-0.0038
63	X SLO	0.09083	0	0.16315	0	-0.0071	0
63	Y SLO	0	0.01245	0	0.1084	0	-0.0041
64	Pesi	0.0241	0.00167	-0.00778	-0.0026	0.01	0.004
64	Eccezione SdC3	0.00491	0.0001	-0.0002	-0.0003	0.0017	0.0005
64	Neve	0.00472	0.00008	0.00033	-0.0001	0.0019	0.0002
64	Eccezionale SdC4	0.00348	0.00004	0.00064	-0.0001	0.0016	0.0001
64	X SLV	0.1713	-0.00002	0.07295	0	0.0918	0
64	Y SLV	0	0.00137	0	0.8908	0	-2.1322
64	X SLD	0.07668	-0.00001	0.03266	0	0.0411	0
64	Y SLD	0	0.00052	0	0.3377	0	-0.8084
64	X SLO	0.09345	-0.00001	0.0398	0	0.0501	0
64	Y SLO	0	0.00056	0	0.3655	0	-0.8749
65	Pesi	-0.02394	0.00462	-0.0096	-0.0072	-0.0101	-0.0111
65	Eccezione SdC3	-0.00213	0.0003	-0.00037	-0.0006	-0.0007	-0.001
65	Neve	-0.0022	0.00022	0.00001	-0.0003	-0.0009	-0.0005
65	Eccezionale SdC4	-0.00174	0.00011	0.00027	-0.0002	-0.0008	-0.0002
65	X SLV	0.16822	0.00004	-0.07166	0	0.0902	-0.0001
65	Y SLV	0	0.00169	-0.00024	0.8904	0	2.1315
65	X SLD	0.0753	0.00002	-0.03208	0	0.0404	0
65	Y SLD	0	0.00064	-0.00009	0.3376	0	0.8082
65	X SLO	0.09177	0.00002	-0.03909	0	0.0492	0
65	Y SLO	0	0.00069	-0.0001	0.3654	0	0.8746
66	Pesi	-0.01289	0.00451	0.02667	-0.0018	-0.0094	0
66	Eccezione SdC3	-0.00107	0.00029	0.00242	-0.0001	-0.0009	0
66	Neve	-0.00124	0.00021	0.00302	-0.0001	-0.0009	0
66	Eccezionale SdC4	-0.00107	0.00011	0.00275	0	-0.0007	0
66	X SLV	0.1635	0.00002	-0.29367	0.0001	-0.0129	0
66	Y SLV	0.00001	0.03054	-0.00006	0.2595	-0.0001	0.01
66	X SLD	0.07319	0.00001	-0.13146	0.0001	-0.0058	0
66	Y SLD	0	0.01158	-0.00002	0.0984	0	0.0038
66	X SLO	0.0892	0.00001	-0.16021	0.0001	-0.007	0
66	Y SLO	0	0.01253	-0.00002	0.1065	0	0.0041
67	Pesi	0.01289	0.00451	0.02667	-0.0018	0.0094	0
67	Eccezione SdC3	0.00149	0.00028	0.00318	-0.0001	0.0009	0
67	Neve	0.00144	0.00021	0.00339	-0.0001	0.0009	0
67	Eccezionale SdC4	0.00107	0.00011	0.00275	0	0.0007	0
67	X SLV	0.1635	-0.00002	0.29367	-0.0001	-0.0129	0
67	Y SLV	-0.00001	0.03054	-0.00006	0.2595	0.0001	-0.01
67	X SLD	0.07319	-0.00001	0.13146	-0.0001	-0.0058	0
67	Y SLD	0	0.01158	-0.00002	0.0984	0	-0.0038
67	X SLO	0.0892	-0.00001	0.16021	-0.0001	-0.007	0
67	Y SLO	0	0.01253	-0.00002	0.1065	0	-0.0041
68	Pesi	0.02394	0.00462	-0.0096	-0.0072	0.0101	0.0111
68	Eccezione SdC3	0.00255	0.00029	-0.00017	-0.0006	0.0009	0.001
68	Neve	0.00241	0.00021	0.00011	-0.0003	0.001	0.0005
68	Eccezionale SdC4	0.00174	0.00011	0.00027	-0.0002	0.0008	0.0002
68	X SLV	0.16822	-0.00004	0.07166	0	0.0902	-0.0001
68	Y SLV	0	0.00169	-0.00024	0.8904	0	-2.1315
68	X SLD	0.0753	-0.00002	0.03208	0	0.0404	0
68	Y SLD	0	0.00064	-0.00009	0.3376	0	-0.8082
68	X SLO	0.09177	-0.00002	0.03909	0	0.0492	0
68	Y SLO	0	0.00069	-0.0001	0.3654	0	-0.8746
69	Pesi	-0.0363	-0.0001	-0.01475	-0.0087	0.0351	-0.0033
69	Eccezione SdC3	-0.03294	-0.00021	0.004	-0.0027	0.0249	-0.0011
69	Neve	-0.00323	0	-0.00009	-0.0004	0.0028	-0.0002
69	X SLV	0.24116	0	-0.15051	-0.0001	0.0546	0
69	Y SLV	0.00005	1.29899	0.00018	-0.6231	0	0.7791
69	X SLD	0.10795	0	-0.06737	0	0.0244	0
69	Y SLD	0.00002	0.4925	0.00007	-0.2362	0	0.2954
69	X SLO	0.13156	0	-0.08211	0	0.0298	0
69	Y SLO	0.00002	0.53302	0.00008	-0.2557	0	0.3197
70	Pesi	0.0363	-0.0001	-0.01475	-0.0087	-0.0351	0.0033
70	Eccezione SdC3	0.03311	-0.00021	0.00412	-0.0027	-0.0248	0.0011
70	Neve	0.00331	0	-0.00004	-0.0004	-0.0028	0.0002
70	X SLV	0.24116	0	0.15051	0.0001	0.0546	0
70	Y SLV	-0.00005	1.29899	0.00018	-0.6231	0	-0.7791
70	X SLD	0.10795	0	0.06737	0	0.0244	0
70	Y SLD	-0.00002	0.4925	0.00007	-0.2362	0	-0.2954
70	X SLO	0.13156	0	0.08211	0	0.0298	0
70	Y SLO	-0.00002	0.53302	0.00008	-0.2557	0	-0.3197
71	Pesi	-0.03614	-0.00008	-0.01343	-0.0029	0.0355	-0.0011
71	Eccezione SdC3	-0.06552	-0.0002	0.00895	-0.0007	0.0498	-0.0003
71	Neve	-0.00637	0	-0.00008	-0.0001	0.0056	0
71	X SLV	0.24559	0	-0.15327	0	0.0556	0
71	Y SLV	0	1.29896	0	-0.6234	0	0.7791
71	X SLD	0.10993	0	-0.06861	0	0.0249	0
71	Y SLD	0	0.4925	0	-0.2364	0	0.2954
71	X SLO	0.13398	0	-0.08361	0	0.0303	0
71	Y SLO	0	0.53301	0	-0.2558	0	0.3197
72	Pesi	0.03614	-0.00008	-0.01343	-0.0029	-0.0355	0.0011
72	Eccezione SdC3	0.06608	-0.0002	0.00933	-0.0007	-0.0497	0.0003
72	Neve	0.00664	0	0.0001	-0.0001	-0.0055	0
72	X SLV	0.24559	0	0.15327	0	0.0556	0
72	Y SLV	0	1.29896	0	-0.6234	0	-0.7791
72	X SLD	0.10993	0	0.06861	0	0.0249	0
72	Y SLD	0	0.4925	0	-0.2364	0	-0.2954
72	X SLO	0.13398	0	0.08361	0	0.0303	0
72	Y SLO	0	0.53301	0	-0.2558	0	-0.3197
73	Pesi	-0.03613	-0.00006	-0.01344	-0.0009	0.0355	-0.0003

Nodo	Cont.	Spostamento			Rotazione		
Ind.	N.br.	ux	uy	uz	rx	ry	rz
73	Eccezione SdC3	-0.03586	-0.0002	0.00378	-0.0001	0.0282	0
73	Neve	-0.00468	0	-0.00038	0	0.0044	0
73	X SLV	0.24535	0	-0.15311	0	0.0555	0
73	Y SLV	0	1.29892	0	-0.6228	0	0.7796
73	X SLD	0.10982	0	-0.06854	0	0.0248	0
73	Y SLD	0	0.49248	0	-0.2361	0	0.2956
73	X SLO	0.13385	0	-0.08353	0	0.0303	0
73	Y SLO	0	0.53299	0	-0.2556	0	0.3199
74	Pesi	0.03613	-0.00006	-0.01344	-0.0009	-0.0355	0.0003
74	Eccezione SdC3	0.0364	-0.0002	0.00413	-0.0001	-0.028	0
74	Neve	0.00493	0	-0.00021	0	-0.0043	0
74	X SLV	0.24535	0	0.15311	0	0.0555	0
74	Y SLV	0	1.29892	0	-0.6228	0	-0.7796
74	X SLD	0.10982	0	0.06854	0	0.0248	0
74	Y SLD	0	0.49248	0	-0.2361	0	-0.2956
74	X SLO	0.13385	0	0.08353	0	0.0303	0
74	Y SLO	0	0.53299	0	-0.2556	0	-0.3199
75	Pesi	0.00113	-0.00003	-0.02076	-0.0002	0.0143	-0.0001
75	Eccezione SdC3	0.00015	-0.00019	-0.00215	0.0002	0.0015	0
75	Neve	-0.0001	0	-0.0013	0	0.0012	0
75	Eccezionale SdC1	-0.01205	0	-0.0185	0	0.0336	0
75	X SLV	0.0199	0	-0.01055	0	0.0004	0
75	Y SLV	0	1.29885	0	-0.6287	0	0.7758
75	X SLD	0.00923	0	-0.00489	0	0.0002	0
75	Y SLD	0	0.49245	0	-0.2384	0	0.2941
75	X SLO	0.01123	0	-0.00595	0	0.0002	0
75	Y SLO	0	0.53296	0	-0.258	0	0.3183
76	Pesi	-0.00113	-0.00003	-0.02076	-0.0002	-0.0143	0.0001
76	Eccezione SdC3	-0.00014	-0.00019	-0.00215	0.0002	-0.0015	0
76	Neve	0.0001	0	-0.0013	0	-0.0012	0
76	Eccezionale SdC1	0.01205	0	-0.0185	0	-0.0336	0
76	X SLV	0.0199	0	0.01055	0	0.0004	0
76	Y SLV	0	1.29885	0	-0.6287	0	-0.7758
76	X SLD	0.00923	0	0.00489	0	0.0002	0
76	Y SLD	0	0.49245	0	-0.2384	0	-0.2941
76	X SLO	0.01123	0	0.00595	0	0.0002	0
76	Y SLO	0	0.53296	0	-0.258	0	-0.3183
77	Pesi	0.00113	-0.00002	-0.02087	-0.0001	0.0144	0
77	Eccezione SdC3	0.00006	-0.00018	-0.00153	0.0002	0.0006	0.0001
77	Neve	-0.00032	0	-0.00127	0	0.0013	0
77	Eccezionale SdC1	-0.02409	0	-0.037	0	0.0672	0
77	X SLV	0.01999	0	-0.01059	0	0.0004	0
77	Y SLV	0	1.29882	0	-0.6282	0	0.7761
77	X SLD	0.00928	0	-0.00492	0	0.0002	0
77	Y SLD	0	0.49244	0	-0.2382	0	0.2943
77	X SLO	0.01128	0	-0.00598	0	0.0002	0
77	Y SLO	0	0.53295	0	-0.2578	0	0.3185
78	Pesi	-0.00113	-0.00002	-0.02087	-0.0001	-0.0144	0
78	Eccezione SdC3	-0.0006	-0.00018	-0.0022	0.0002	-0.0014	-0.0001
78	Neve	0.00006	0	-0.00159	0	-0.0017	0
78	Eccezionale SdC1	0.02409	0	-0.037	0	-0.0672	0
78	X SLV	0.01999	0	0.01059	0	0.0004	0
78	Y SLV	0	1.29882	0	-0.6282	0	-0.7761
78	X SLD	0.00928	0	0.00492	0	0.0002	0
78	Y SLD	0	0.49244	0	-0.2382	0	-0.2943
78	X SLO	0.01128	0	0.00598	0	0.0002	0
78	Y SLO	0	0.53295	0	-0.2578	0	-0.3185
79	Pesi	0.00113	0	-0.02087	0	0.0144	0
79	Neve	-0.00049	0	-0.00153	0	0.0017	0
79	Eccezionale SdC1	-0.03049	0	-0.05111	0	0.0886	0
79	X SLV	0.01999	0	-0.01059	0	0.0004	0
79	Y SLV	0	1.29881	0	-0.6281	0	0.7763
79	X SLD	0.00928	0	-0.00492	0	0.0002	0
79	Y SLD	0	0.49244	0	-0.2381	0	0.2943
79	X SLO	0.01128	0	-0.00598	0	0.0002	0
79	Y SLO	0	0.53295	0	-0.2577	0	0.3185
80	Pesi	-0.00113	0	-0.02087	0	-0.0144	0
80	Eccezione SdC3	-0.00034	-0.00018	-0.0014	0.0003	-0.0012	-0.0001
80	Neve	0.00023	0	-0.00185	0	-0.0021	0
80	Eccezionale SdC1	0.03049	0	-0.05111	0	-0.0886	0
80	X SLV	0.01999	0	0.01059	0	0.0004	0
80	Y SLV	0	1.29881	0	-0.6281	0	-0.7763
80	X SLD	0.00928	0	0.00492	0	0.0002	0
80	Y SLD	0	0.49244	0	-0.2381	0	-0.2943
80	X SLO	0.01128	0	0.00598	0	0.0002	0
80	Y SLO	0	0.53295	0	-0.2577	0	-0.3185
81	Pesi	0.00113	0.00002	-0.02087	0.0001	0.0144	0
81	Neve	-0.00045	0	-0.00183	0	0.0022	0
81	Eccezionale SdC1	-0.03689	0	-0.06521	0	0.1099	0
81	X SLV	0.01999	0	-0.01059	0	0.0004	0
81	Y SLV	0	1.29882	0	-0.6282	0	0.7761
81	X SLD	0.00928	0	-0.00492	0	0.0002	0
81	Y SLD	0	0.49244	0	-0.2382	0	0.2943
81	X SLO	0.01128	0	-0.00598	0	0.0002	0
81	Y SLO	0	0.53295	0	-0.2578	0	0.3185
82	Pesi	-0.00113	0.00002	-0.02087	0.0001	-0.0144	0
82	Neve	0.00045	0	-0.00183	0	-0.0022	0
82	Eccezionale SdC1	0.03689	0	-0.06521	0	-0.1099	0
82	X SLV	0.01999	0	0.01059	0	0.0004	0
82	Y SLV	0	1.29882	0	-0.6282	0	-0.7761
82	X SLD	0.00928	0	0.00492	0	0.0002	0
82	Y SLD	0	0.49244	0	-0.2382	0	-0.2943
82	X SLO	0.01128	0	0.00598	0	0.0002	0
82	Y SLO	0	0.53295	0	-0.2578	0	-0.3185
83	Pesi	0.00113	0.00003	-0.02076	0.0002	0.0143	0.0001

Nodo	Cont.	Spostamento			Rotazione		
Ind.	N.br.	ux	uy	uz	rx	ry	rz
83	Eccezione SdC3	-0.0001	-0.00017	-0.00136	0.0003	0.0013	0.0001
83	Neve	-0.00044	0	-0.00183	0	0.0022	0
83	Eccezionale SdC4	-0.00026	0.00002	-0.00039	0	0.0007	0
83	Eccezionale SdC1	-0.01844	0	-0.0326	0	0.0549	0
83	X SLV	0.0199	0	-0.01055	0	0.0004	0
83	Y SLV	0	1.29885	0	-0.6287	0	0.7758
83	X SLD	0.00923	0	-0.00489	0	0.0002	0
83	Y SLD	0	0.49245	0	-0.2384	0	0.2941
83	X SLO	0.01123	0	-0.00595	0	0.0002	0
83	Y SLO	0	0.53296	0	-0.258	0	0.3183
84	Pesi	-0.00113	0.00003	-0.02076	0.0002	-0.0143	-0.0001
84	Eccezione SdC3	0.00011	-0.00017	-0.00134	0.0003	-0.0013	-0.0001
84	Neve	0.00045	0	-0.00182	0	-0.0022	0
84	Eccezionale SdC4	0.00026	0.00002	-0.00039	0	-0.0007	0
84	Eccezionale SdC1	0.01844	0	-0.0326	0	-0.0549	0
84	X SLV	0.0199	0	0.01055	0	0.0004	0
84	Y SLV	0	1.29885	0	-0.6287	0	-0.7758
84	X SLD	0.00923	0	0.00489	0	0.0002	0
84	Y SLD	0	0.49245	0	-0.2384	0	-0.2941
84	X SLO	0.01123	0	0.00595	0	0.0002	0
84	Y SLO	0	0.53296	0	-0.258	0	-0.3183
85	Pesi	-0.03613	0.00006	-0.01344	0.0009	0.0355	0.0003
85	Eccezione SdC3	-0.00585	-0.00017	-0.00163	0.0003	0.0066	0.0001
85	Neve	-0.00622	0	-0.00019	0	0.0057	0
85	Eccezionale SdC4	-0.00503	0.00002	0.00088	0	0.0037	0
85	X SLV	0.24535	0	-0.15311	0	0.0555	0
85	Y SLV	0	1.29892	0	-0.6228	0	0.7796
85	X SLD	0.10982	0	-0.06854	0	0.0248	0
85	Y SLD	0	0.49248	0	-0.2361	0	0.2956
85	X SLO	0.13385	0	-0.08353	0	0.0303	0
85	Y SLO	0	0.53299	0	-0.2556	0	0.3199
86	Pesi	0.03613	0.00006	-0.01344	0.0009	-0.0355	-0.0003
86	Eccezione SdC3	0.00714	-0.00017	-0.00077	0.0003	-0.0062	-0.0001
86	Neve	0.00684	0	0.00023	0	-0.0055	0
86	Eccezionale SdC4	0.00503	0.00002	0.00088	0	-0.0037	0
86	X SLV	0.24535	0	0.15311	0	0.0555	0
86	Y SLV	0	1.29892	0	-0.6228	0	-0.7796
86	X SLD	0.10982	0	0.06854	0	0.0248	0
86	Y SLD	0	0.49248	0	-0.2361	0	-0.2956
86	X SLO	0.13385	0	0.08353	0	0.0303	0
86	Y SLO	0	0.53299	0	-0.2556	0	-0.3199
87	Pesi	-0.03614	0.00008	-0.01343	0.0029	0.0355	0.0011
87	Eccezione SdC3	-0.00612	-0.00017	-0.00146	0.0004	0.0065	0.0001
87	Neve	-0.00635	0	-0.0001	0.0001	0.0056	0.0001
87	Eccezionale SdC4	-0.00503	0.00002	0.00088	0	0.0037	0
87	X SLV	0.24559	0	-0.15327	0	0.0556	0
87	Y SLV	0	1.29896	0	-0.6234	0	0.7791
87	X SLD	0.10993	0	-0.06861	0	0.0249	0
87	Y SLD	0	0.4925	0	-0.2364	0	0.2954
87	X SLO	0.13398	0	-0.08361	0	0.0303	0
87	Y SLO	0	0.53301	0	-0.2558	0	0.3197
88	Pesi	0.03614	0.00008	-0.01343	0.0029	-0.0355	-0.0011
88	Eccezione SdC3	0.00684	-0.00017	-0.00097	0.0004	-0.0062	-0.0001
88	Neve	0.0067	0	0.00013	0.0001	-0.0055	0
88	Eccezionale SdC4	0.00503	0.00002	0.00088	0	-0.0037	0
88	X SLV	0.24559	0	0.15327	0	0.0556	0
88	Y SLV	0	1.29896	0	-0.6234	0	-0.7791
88	X SLD	0.10993	0	0.06861	0	0.0249	0
88	Y SLD	0	0.4925	0	-0.2364	0	-0.2954
88	X SLO	0.13398	0	0.08361	0	0.0303	0
88	Y SLO	0	0.53301	0	-0.2558	0	-0.3197
89	Pesi	-0.0363	0.0001	-0.01475	0.0087	0.0351	0.0033
89	Eccezione SdC3	-0.00296	-0.00017	-0.0009	0.0008	0.0033	0.0003
89	Neve	-0.00313	0	-0.00016	0.0004	0.0028	0.0002
89	Eccezionale SdC4	-0.00252	0.00002	0.0004	0.0002	0.0018	0.0001
89	X SLV	0.24116	0	-0.15051	0.0001	0.0546	0
89	Y SLV	-0.00005	1.29899	-0.00018	-0.6231	0	0.7791
89	X SLD	0.10795	0	-0.06737	0	0.0244	0
89	Y SLD	-0.00002	0.4925	-0.00007	-0.2362	0	0.2954
89	X SLO	0.13156	0	-0.08211	0	0.0298	0
89	Y SLO	-0.00002	0.53302	-0.00008	-0.2557	0	0.3197
90	Pesi	0.0363	0.0001	-0.01475	0.0087	-0.0351	-0.0033
90	Eccezione SdC3	0.00358	-0.00017	-0.00049	0.0008	-0.0031	-0.0003
90	Neve	0.00343	0	0.00004	0.0004	-0.0027	-0.0002
90	Eccezionale SdC4	0.00252	0.00002	0.0004	0.0002	-0.0018	-0.0001
90	X SLV	0.24116	0	0.15051	-0.0001	0.0546	0
90	Y SLV	0.00005	1.29899	-0.00018	-0.6231	0	-0.7791
90	X SLD	0.10795	0	0.06737	0	0.0244	0
90	Y SLD	0.00002	0.4925	-0.00007	-0.2362	0	-0.2954
90	X SLO	0.13156	0	0.08211	0	0.0298	0
90	Y SLO	0.00002	0.53302	-0.00008	-0.2557	0	-0.3197
91	Pesi	-0.0056	0.00005	-0.12074	-0.0008	0.1119	-0.0002
91	Eccezione SdC3	-0.00963	-0.00021	-0.07266	-0.0001	0.0781	-0.0001
91	Neve	-0.00076	0	-0.00831	0	0.008	0
91	X SLV	0.2542	0	-0.17896	0	-0.0098	0
91	Y SLV	0.00002	2.60085	0.00024	-2.2909	-0.0001	0.0688
91	X SLD	0.11379	0	-0.08011	0	-0.0044	0
91	Y SLD	0.00001	0.9861	0.00009	-0.8686	0	0.0261
91	X SLO	0.13867	0	-0.09763	0	-0.0053	0
91	Y SLO	0.00001	1.06722	0.0001	-0.94	0	0.0282
92	Pesi	0.0056	0.00005	-0.12074	-0.0008	-0.1119	0.0002
92	Eccezione SdC3	0.00983	-0.00022	-0.07247	-0.0001	-0.0781	0.0001
92	Neve	0.00085	0	-0.00822	0	-0.008	0
92	X SLV	0.2542	0	0.17896	0	-0.0098	0
92	Y SLV	-0.00002	2.60085	0.00024	-2.2909	0.0001	-0.0688

Nodo	Cont.	Spostamento			Rotazione		
Ind.	N.br.	ux	uy	uz	rx	ry	rz
92	X SLD	0.11379	0	0.08011	0	-0.0044	0
92	Y SLD	-0.00001	0.9861	0.00009	-0.8686	0	-0.0261
92	X SLO	0.13867	0	0.09763	0	-0.0053	0
92	Y SLO	-0.00001	1.06722	0.0001	-0.94	0	-0.0282
93	Pesi	-0.00542	0.00004	-0.11974	-0.0005	0.1121	-0.0001
93	Eccezione SdC3	-0.01903	-0.00022	-0.1441	0	0.1558	0
93	Neve	-0.00144	0	-0.01648	0	0.016	0
93	X SLV	0.25887	0	-0.18224	0	-0.0099	0
93	Y SLV	0	2.60099	0	-2.2922	0	0.0683
93	X SLD	0.11588	0	-0.08158	0	-0.0044	0
93	Y SLD	0	0.98615	0	-0.8691	0	0.0259
93	X SLO	0.14122	0	-0.09942	0	-0.0054	0
93	Y SLO	0	1.06728	0	-0.9406	0	0.028
94	Pesi	0.00542	0.00004	-0.11974	-0.0005	-0.1121	0.0001
94	Eccezione SdC3	0.01965	-0.00022	-0.14359	0	-0.1558	0
94	Neve	0.00174	0	-0.01624	0	-0.016	0
94	X SLV	0.25887	0	0.18224	0	-0.0099	0
94	Y SLV	0	2.60099	0	-2.2922	0	-0.0683
94	X SLD	0.11588	0	0.08158	0	-0.0044	0
94	Y SLD	0	0.98615	0	-0.8691	0	-0.0259
94	X SLO	0.14122	0	0.09942	0	-0.0054	0
94	Y SLO	0	1.06728	0	-0.9406	0	-0.028
95	Pesi	-0.00542	0.00003	-0.11973	-0.0003	0.1121	-0.0001
95	Eccezione SdC3	-0.00995	-0.00022	-0.08175	0	0.0863	0
95	Neve	-0.00093	0	-0.0129	0	0.012	0
95	X SLV	0.25861	0	-0.18205	0	-0.0099	0
95	Y SLV	0	2.60126	0	-2.2947	0	0.0675
95	X SLD	0.11576	0	-0.08149	0	-0.0044	0
95	Y SLD	0	0.98626	0	-0.87	0	0.0256
95	X SLO	0.14108	0	-0.09931	0	-0.0054	0
95	Y SLO	0	1.06739	0	-0.9416	0	0.0277
96	Pesi	0.00542	0.00003	-0.11973	-0.0003	-0.1121	0.0001
96	Eccezione SdC3	0.01053	-0.00022	-0.08127	0	-0.0863	0
96	Neve	0.00121	0	-0.01266	0	-0.012	0
96	X SLV	0.25861	0	0.18205	0	-0.0099	0
96	Y SLV	0	2.60126	0	-2.2947	0	-0.0675
96	X SLD	0.11576	0	0.08149	0	-0.0044	0
96	Y SLD	0	0.98626	0	-0.87	0	-0.0256
96	X SLO	0.14108	0	0.09931	0	-0.0054	0
96	Y SLO	0	1.06739	0	-0.9416	0	-0.0277
97	Pesi	0.00788	0.00002	-0.04768	-0.0002	0.0159	0
97	Eccezione SdC3	0.00085	-0.00023	-0.00489	0.0001	0.001	0
97	Neve	0.00053	0	-0.00358	0	0.001	0
97	Eccezionale SdC1	0.0089	0	-0.08608	0	0.0337	0
97	X SLV	0.01813	0	-0.00771	0	-0.0023	0
97	Y SLV	0	2.60168	0	-2.2321	0	0.0948
97	X SLD	0.00842	0	-0.00358	0	-0.0011	0
97	Y SLD	0	0.98641	0	-0.8463	0	0.0359
97	X SLO	0.01024	0	-0.00435	0	-0.0013	0
97	Y SLO	0	1.06756	0	-0.9159	0	0.0389
98	Pesi	-0.00788	0.00002	-0.04768	-0.0002	-0.0159	0
98	Eccezione SdC3	-0.00084	-0.00023	-0.00488	0.0001	-0.001	0
98	Neve	-0.00053	0	-0.00358	0	-0.001	0
98	Eccezionale SdC1	-0.0089	0	-0.08608	0	-0.0337	0
98	X SLV	0.01813	0	0.00771	0	-0.0023	0
98	Y SLV	0	2.60168	0	-2.2321	0	-0.0948
98	X SLD	0.00842	0	0.00358	0	-0.0011	0
98	Y SLD	0	0.98641	0	-0.8463	0	-0.0359
98	X SLO	0.01024	0	0.00435	0	-0.0013	0
98	Y SLO	0	1.06756	0	-0.9159	0	-0.0389
99	Pesi	0.00792	0.00001	-0.04794	-0.0001	0.0159	0
99	Eccezione SdC3	0.00013	-0.00023	-0.00236	0.0001	0.0003	0
99	Neve	0.00032	0	-0.0036	0	0.0011	0
99	Eccezionale SdC1	0.0178	0	-0.17215	0	0.0674	0
99	X SLV	0.01822	0	-0.00775	0	-0.0024	0
99	Y SLV	0	2.60182	0	-2.2335	0	0.0943
99	X SLD	0.00845	0	-0.0036	0	-0.0011	0
99	Y SLD	0	0.98647	0	-0.8468	0	0.0358
99	X SLO	0.01028	0	-0.00437	0	-0.0013	0
99	Y SLO	0	1.06762	0	-0.9165	0	0.0387
100	Pesi	-0.00792	0.00001	-0.04794	-0.0001	-0.0159	0
100	Eccezione SdC3	-0.00128	-0.00023	-0.00479	0.0001	-0.0007	0
100	Neve	-0.00087	0	-0.00477	0	-0.0013	0
100	Eccezionale SdC1	-0.0178	0	-0.17215	0	-0.0674	0
100	X SLV	0.01822	0	0.00775	0	-0.0024	0
100	Y SLV	0	2.60182	0	-2.2335	0	-0.0943
100	X SLD	0.00845	0	0.0036	0	-0.0011	0
100	Y SLD	0	0.98647	0	-0.8468	0	-0.0358
100	X SLO	0.01028	0	0.00437	0	-0.0013	0
100	Y SLO	0	1.06762	0	-0.9165	0	-0.0387
101	Pesi	0.00792	0	-0.04794	0	0.0159	0
101	Eccezione SdC3	-0.00016	-0.00023	-0.00121	0.0001	0.0003	0
101	Neve	0.00045	0	-0.00484	0	0.0016	0
101	Eccezionale SdC1	0.02424	0	-0.22857	0	0.0879	0
101	X SLV	0.01822	0	-0.00775	0	-0.0024	0
101	Y SLV	0	2.60187	0	-2.2339	0	0.0942
101	X SLD	0.00845	0	-0.0036	0	-0.0011	0
101	Y SLD	0	0.98649	0	-0.847	0	0.0357
101	X SLO	0.01028	0	-0.00437	0	-0.0013	0
101	Y SLO	0	1.06764	0	-0.9167	0	0.0386
102	Pesi	-0.00792	0	-0.04794	0	-0.0159	0
102	Eccezione SdC3	-0.00099	-0.00023	-0.00364	0.0001	-0.0007	0
102	Neve	-0.001	0	-0.00601	0	-0.0018	0
102	Eccezionale SdC1	-0.02424	0	-0.22857	0	-0.0879	0
102	X SLV	0.01822	0	0.00775	0	-0.0024	0

Nodo	Cont.	Spostamento			Rotazione		
Ind.	N.br.	ux	uy	uz	rx	ry	rz
102	Y SLV	0	2.60187	0	-2.2339	0	-0.0942
102	X SLD	0.00845	0	0.0036	0	-0.0011	0
102	Y SLD	0	0.98649	0	-0.847	0	-0.0357
102	X SLO	0.01028	0	0.00437	0	-0.0013	0
102	Y SLO	0	1.06764	0	-0.9167	0	-0.0386
103	Pesi	0.00792	-0.00001	-0.04794	0.0001	0.0159	0
103	Neve	0.00079	0	-0.00604	0	0.0019	0
103	Eccezionale SdC1	0.03068	0	-0.28494	0	0.1083	0
103	X SLV	0.01822	0	-0.00775	0	-0.0024	0
103	Y SLV	0	2.60182	0	-2.2335	0	0.0943
103	X SLD	0.00845	0	-0.0036	0	-0.0011	0
103	Y SLD	0	0.98647	0	-0.8468	0	0.0358
103	X SLO	0.01028	0	-0.00437	0	-0.0013	0
103	Y SLO	0	1.06762	0	-0.9165	0	0.0387
104	Pesi	-0.00792	-0.00001	-0.04794	0.0001	-0.0159	0
104	Neve	-0.00079	0	-0.00604	0	-0.0019	0
104	Eccezionale SdC1	-0.03068	0	-0.28494	0	-0.1083	0
104	X SLV	0.01822	0	0.00775	0	-0.0024	0
104	Y SLV	0	2.60182	0	-2.2335	0	-0.0943
104	X SLD	0.00845	0	0.0036	0	-0.0011	0
104	Y SLD	0	0.98647	0	-0.8468	0	-0.0358
104	X SLO	0.01028	0	0.00437	0	-0.0013	0
104	Y SLO	0	1.06762	0	-0.9165	0	-0.0387
105	Pesi	0.00788	-0.00002	-0.04768	0.0002	0.0159	0
105	Eccezione SdC3	0.00057	-0.00023	-0.00375	0.0001	0.001	0
105	Neve	0.00079	0	-0.00605	0	0.0019	0
105	Eccezionale SdC4	0.00019	0.00002	-0.00182	0	0.0007	0
105	Eccezionale SdC1	0.01534	0	-0.14245	0	0.0541	0
105	X SLV	0.01813	0	-0.00771	0	-0.0023	0
105	Y SLV	0	2.60168	0	-2.2321	0	0.0948
105	X SLD	0.00842	0	-0.00358	0	-0.0011	0
105	Y SLD	0	0.98641	0	-0.8463	0	0.0359
105	X SLO	0.01024	0	-0.00435	0	-0.0013	0
105	Y SLO	0	1.06756	0	-0.9159	0	0.0389
106	Pesi	-0.00788	-0.00002	-0.04768	0.0002	-0.0159	0
106	Eccezione SdC3	-0.00053	-0.00023	-0.00368	0.0001	-0.001	0
106	Neve	-0.00078	0	-0.00602	0	-0.0019	0
106	Eccezionale SdC4	-0.00019	0.00002	-0.00182	0	-0.0007	0
106	Eccezionale SdC1	-0.01534	0	-0.14245	0	-0.0541	0
106	X SLV	0.01813	0	0.00771	0	-0.0023	0
106	Y SLV	0	2.60168	0	-2.2321	0	-0.0948
106	X SLD	0.00842	0	0.00358	0	-0.0011	0
106	Y SLD	0	0.98641	0	-0.8463	0	-0.0359
106	X SLO	0.01024	0	0.00435	0	-0.0013	0
106	Y SLO	0	1.06756	0	-0.9159	0	-0.0389
107	Pesi	-0.00542	-0.00003	-0.11973	0.0003	0.1121	0.0001
107	Eccezione SdC3	-0.00045	-0.00023	-0.01976	0.0001	0.0168	0
107	Neve	-0.00126	0	-0.01665	0	0.0161	0
107	Eccezionale SdC4	-0.00154	0.00002	-0.01057	0	0.0118	0
107	X SLV	0.25861	0	-0.18205	0	-0.0099	0
107	Y SLV	0	2.60126	0	-2.2947	0	0.0675
107	X SLD	0.11576	0	-0.08149	0	-0.0044	0
107	Y SLD	0	0.98626	0	-0.87	0	0.0256
107	X SLO	0.14108	0	-0.09931	0	-0.0054	0
107	Y SLO	0	1.06739	0	-0.9416	0	0.0277
108	Pesi	0.00542	-0.00003	-0.11973	0.0003	-0.1121	-0.0001
108	Eccezione SdC3	0.0019	-0.00023	-0.01853	0.0001	-0.0168	0
108	Neve	0.00196	0	-0.01606	0	-0.0161	0
108	Eccezionale SdC4	0.00154	0.00002	-0.01057	0	-0.0118	0
108	X SLV	0.25861	0	0.18205	0	-0.0099	0
108	Y SLV	0	2.60126	0	-2.2947	0	-0.0675
108	X SLD	0.11576	0	0.08149	0	-0.0044	0
108	Y SLD	0	0.98626	0	-0.87	0	-0.0256
108	X SLO	0.14108	0	0.09931	0	-0.0054	0
108	Y SLO	0	1.06739	0	-0.9416	0	-0.0277
109	Pesi	-0.00542	-0.00004	-0.11974	0.0005	0.1121	0.0001
109	Eccezione SdC3	-0.00074	-0.00023	-0.01956	0.0001	0.0168	0
109	Neve	-0.0014	0	-0.01656	0	0.0161	0
109	Eccezionale SdC4	-0.00154	0.00002	-0.01057	0	0.0118	0
109	X SLV	0.25887	0	-0.18224	0	-0.0099	0
109	Y SLV	0	2.60099	0	-2.2922	0	0.0683
109	X SLD	0.11588	0	-0.08158	0	-0.0044	0
109	Y SLD	0	0.98615	0	-0.8691	0	0.0259
109	X SLO	0.14122	0	-0.09942	0	-0.0054	0
109	Y SLO	0	1.06728	0	-0.9406	0	0.028
110	Pesi	0.00542	-0.00004	-0.11974	0.0005	-0.1121	-0.0001
110	Eccezione SdC3	0.0016	-0.00023	-0.01873	0.0001	-0.0168	0
110	Neve	0.00182	0	-0.01616	0	-0.016	0
110	Eccezionale SdC4	0.00154	0.00002	-0.01057	0	-0.0118	0
110	X SLV	0.25887	0	0.18224	0	-0.0099	0
110	Y SLV	0	2.60099	0	-2.2922	0	-0.0683
110	X SLD	0.11588	0	0.08158	0	-0.0044	0
110	Y SLD	0	0.98615	0	-0.8691	0	-0.0259
110	X SLO	0.14122	0	0.09942	0	-0.0054	0
110	Y SLO	0	1.06728	0	-0.9406	0	-0.028
111	Pesi	-0.0056	-0.00005	-0.12074	0.0008	0.1119	0.0002
111	Eccezione SdC3	-0.00026	-0.00023	-0.00999	0.0002	0.0084	0
111	Neve	-0.00065	0	-0.00841	0	0.0081	0
111	Eccezionale SdC4	-0.00078	0.00002	-0.00533	0	0.0059	0
111	X SLV	0.2542	0	-0.17896	0	-0.0098	0
111	Y SLV	-0.00002	2.60085	-0.00024	-2.2909	0.0001	0.0688
111	X SLD	0.11379	0	-0.08011	0	-0.0044	0
111	Y SLD	-0.00001	0.9861	-0.00009	-0.8686	0	0.0261
111	X SLO	0.13867	0	-0.09763	0	-0.0053	0
111	Y SLO	-0.00001	1.06722	-0.0001	-0.94	0	0.0282

Nodo	Cont.	Spostamento			Rotazione		
Ind.	N.br.	ux	uy	uz	rx	ry	rz
112	Pesi	0.0056	-0.00005	-0.12074	0.0008	-0.1119	-0.0002
112	Eccezione SdC3	0.00094	-0.00023	-0.00941	0.0002	-0.0084	0
112	Neve	0.00098	0	-0.00813	0	-0.0081	0
112	Eccezionale SdC4	0.00078	0.00002	-0.00533	0	-0.0059	0
112	X SLV	0.2542	0	0.17896	0	-0.0098	0
112	Y SLV	0.00002	2.60085	-0.00024	-2.2909	-0.0001	-0.0688
112	X SLD	0.11379	0	0.08011	0	-0.0044	0
112	Y SLD	0.00001	0.9861	-0.00009	-0.8686	0	-0.0261
112	X SLO	0.13867	0	0.09763	0	-0.0053	0
112	Y SLO	0.00001	1.06722	-0.0001	-0.94	0	-0.0282
113	Pesi	0	-0.00001	-0.37671	-0.0003	0	0
113	Eccezione SdC3	0.00009	-0.00027	-0.28797	0	0	0
113	Neve	0.00004	0	-0.02968	0	0	0
113	X SLV	0.2341	0	0	0	-0.0809	0
113	Y SLV	0	3.5343	0.00036	-2.5534	0	0
113	X SLD	0.10479	0	0	0	-0.0362	0
113	Y SLD	0	1.34001	0.00014	-0.9681	0	0
113	X SLO	0.12771	0	0	0	-0.0441	0
113	Y SLO	0	1.45025	0.00015	-1.0477	0	0
114	Pesi	0	-0.00001	-0.37611	0	0	0
114	Eccezione SdC3	0.00028	-0.00027	-0.57394	0.0001	-0.0001	0
114	Neve	0.00013	0	-0.0591	0	-0.0001	0
114	X SLV	0.2384	0	0	0	-0.0824	0
114	Y SLV	0	3.53362	0	-2.5513	0	0
114	X SLD	0.10672	0	0	0	-0.0369	0
114	Y SLD	0	1.33975	0	-0.9673	0	0
114	X SLO	0.13006	0	0	0	-0.0449	0
114	Y SLO	0	1.44997	0	-1.0469	0	0
115	Pesi	0	0	-0.37607	0	0	0
115	Eccezione SdC3	0.00026	-0.00027	-0.3179	0.0001	-0.0001	0
115	Neve	0.00013	0	-0.04438	0	-0.0001	0
115	X SLV	0.23817	0	0	0	-0.0823	0
115	Y SLV	0	3.53226	0	-2.5471	0	0
115	X SLD	0.10661	0	0	0	-0.0368	0
115	Y SLD	0	1.33924	0	-0.9657	0	0
115	X SLO	0.12993	0	0	0	-0.0449	0
115	Y SLO	0	1.44942	0	-1.0452	0	0
116	Pesi	0	0	-0.04742	0	0	0
116	Eccezione SdC3	0	-0.00027	-0.00416	0.0001	0	0
116	Neve	0	0	-0.0036	0	0	0
116	Eccezionale SdC1	0	0	-0.11185	0	0	0
116	X SLV	0.01534	0	0	0	-0.0032	0
116	Y SLV	0	3.53022	0	-2.1553	0	0
116	X SLD	0.00712	0	0	0	-0.0015	0
116	Y SLD	0	1.33847	0	-0.8172	0	0
116	X SLO	0.00866	0	0	0	-0.0018	0
116	Y SLO	0	1.44858	0	-0.8844	0	0
117	Pesi	0	0	-0.04768	0	0	0
117	Eccezione SdC3	-0.00035	-0.00027	-0.00247	0.0001	0.0005	0
117	Neve	-0.00017	0	-0.0044	0	0.0003	0
117	Eccezionale SdC1	0	0	-0.22369	0	0	0
117	X SLV	0.01541	0	0	0	-0.0032	0
117	Y SLV	0	3.52961	0	-2.1543	0	0
117	X SLD	0.00715	0	0	0	-0.0015	0
117	Y SLD	0	1.33823	0	-0.8168	0	0
117	X SLO	0.0087	0	0	0	-0.0018	0
117	Y SLO	0	1.44833	0	-0.884	0	0
118	Pesi	0	0	-0.04768	0	0	0
118	Eccezione SdC3	-0.00035	-0.00027	-0.00206	0.0001	0.0005	0
118	Neve	-0.00017	0	-0.006	0	0.0003	0
118	Eccezionale SdC1	0	0	-0.29307	0	0	0
118	X SLV	0.01541	0	0	0	-0.0032	0
118	Y SLV	0	3.5294	0	-2.1539	0	0
118	X SLD	0.00715	0	0	0	-0.0015	0
118	Y SLD	0	1.33816	0	-0.8167	0	0
118	X SLO	0.0087	0	0	0	-0.0018	0
118	Y SLO	0	1.44824	0	-0.8838	0	0
119	Pesi	0	0	-0.04768	0	0	0
119	Neve	0	0	-0.0068	0	0	0
119	Eccezionale SdC1	0	0	-0.3624	0	0	0
119	X SLV	0.01541	0	0	0	-0.0032	0
119	Y SLV	0	3.52961	0	-2.1543	0	0
119	X SLD	0.00715	0	0	0	-0.0015	0
119	Y SLD	0	1.33823	0	-0.8168	0	0
119	X SLO	0.0087	0	0	0	-0.0018	0
119	Y SLO	0	1.44833	0	-0.884	0	0
120	Pesi	0	0	-0.04742	0	0	0
120	Eccezione SdC3	0.00001	-0.00027	-0.00377	0.0001	0	0
120	Neve	0	0	-0.00681	0	0	0
120	Eccezionale SdC4	0	0.00002	-0.00237	0	0	0
120	Eccezionale SdC1	0	0	-0.18119	0	0	0
120	X SLV	0.01534	0	0	0	-0.0032	0
120	Y SLV	0	3.53022	0	-2.1553	0	0
120	X SLD	0.00712	0	0	0	-0.0015	0
120	Y SLD	0	1.33847	0	-0.8172	0	0
120	X SLO	0.00866	0	0	0	-0.0018	0
120	Y SLO	0	1.44858	0	-0.8844	0	0
121	Pesi	0	0	-0.37607	0	0	0
121	Eccezione SdC3	0.00065	-0.00027	-0.06221	0.0001	-0.0003	0
121	Neve	0.00031	0	-0.05929	0	-0.0001	0
121	Eccezionale SdC4	0	0.00002	-0.04341	0	0	0
121	X SLV	0.23817	0	0	0	-0.0823	0
121	Y SLV	0	3.53226	0	-2.5471	0	0
121	X SLD	0.10661	0	0	0	-0.0368	0
121	Y SLD	0	1.33924	0	-0.9657	0	0

Nodo	Cont.	Spostamento			Rotazione		
Ind.	N.br.	ux	uy	uz	rx	ry	rz
121	X SLO	0.12993	0	0	0	-0.0449	0
121	Y SLO	0	1.44942	0	-1.0452	0	0
122	Pesi	0	0.00001	-0.37611	0	0	0
122	Eccezione SdC3	0.00038	-0.00027	-0.06219	0.0001	-0.0002	0
122	Neve	0.00018	0	-0.05929	0	-0.0001	0
122	Eccezionale SdC4	0	0.00002	-0.04342	0	0	0
122	X SLV	0.2384	0	0	0	-0.0824	0
122	Y SLV	0	3.53362	0	-2.5513	0	0
122	X SLD	0.10672	0	0	0	-0.0369	0
122	Y SLD	0	1.33975	0	-0.9673	0	0
122	X SLO	0.13006	0	0	0	-0.0449	0
122	Y SLO	0	1.44997	0	-1.0469	0	0
123	Pesi	0	0.00001	-0.37671	0.0003	0	0
123	Eccezione SdC3	0.00031	-0.00027	-0.03129	0.0001	-0.0001	0
123	Neve	0.00015	0	-0.02978	0	-0.0001	0
123	Eccezionale SdC4	0	0.00002	-0.02178	0	0	0
123	X SLV	0.2341	0	0	0	-0.0809	0
123	Y SLV	0	3.5343	-0.00036	-2.5534	0	0
123	X SLD	0.10479	0	0	0	-0.0362	0
123	Y SLD	0	1.34001	-0.00014	-0.9681	0	0
123	X SLO	0.12771	0	0	0	-0.0441	0
123	Y SLO	0	1.45025	-0.00015	-1.0477	0	0

8.2.3 Spostamenti nodali in combinazioni di carico

***Nodo**: nodo interessato dallo spostamento.*
***Ind.**: indice del nodo.*
***Cont.**: condizione o combinazione di carico a cui si riferisce lo spostamento.*
***N.br.**: nome breve della condizione o combinazione di carico.*
***Spostamento**: spostamento traslazionale del nodo.*
***ux**: componente X dello spostamento del nodo. [cm]*
***uy**: componente Y dello spostamento del nodo. [cm]*
***uz**: componente Z dello spostamento del nodo. [cm]*
***Rotazione**: spostamento rotazionale del nodo.*
***rx**: componente X della rotazione del nodo. [deg]*
***ry**: componente Y della rotazione del nodo. [deg]*
***rz**: componente Z della rotazione del nodo. [deg]*

Nodo	Cont.	Spostamento			Rotazione		
Ind.	N.br.	ux	uy	uz	rx	ry	rz
2	SLU 1	0	0	0	0.0057	0	0.007
2	SLU 2	0	0	0	0.0057	0	0.007
2	SLU 3	0	0	0	0.0057	0	0.0071
2	SLU 4	0	0	0	0.0057	0	0.0071
2	SLU 5	0	0	0	0.0057	0	0.0071
2	SLU 6	0	0	0	0.0059	-0.0009	0.0073
2	SLU 7	0	0	0	0.0059	-0.0009	0.0073
2	SLU 8	0	0	0	0.0059	-0.0009	0.0073
2	SLU 9	0	0	0	0.0059	-0.0009	0.0073
2	SLU 10	0	0	0	0.0061	-0.0018	0.0075
2	SLU 11	0	0	0	0.0061	-0.0018	0.0075
2	SLU 12	0	0	0	0.0061	-0.0018	0.0075
2	SLU 13	0	0	0	0.0061	-0.0018	0.0075
2	SLU 14	0	0	0	0.0067	-0.0073	0.008
2	SLU 15	0	0	0	0.0067	-0.0073	0.008
2	SLU 16	0	0	0	0.0067	-0.0073	0.008
2	SLU 17	0	0	0	0.0067	-0.0073	0.008
2	SLU 18	0	0	0	0.0069	-0.0082	0.0082
2	SLU 19	0	0	0	0.0069	-0.0082	0.0082
2	SLU 20	0	0	0	0.0069	-0.0082	0.0083
2	SLU 21	0	0	0	0.0069	-0.0082	0.0083
2	SLU 22	0	0	0	0.0071	-0.009	0.0085
2	SLU 23	0	0	0	0.0071	-0.009	0.0085
2	SLU 24	0	0	0	0.0071	-0.009	0.0085
2	SLU 25	0	0	0	0.0071	-0.009	0.0085
2	SLU 26	0	0	0	0.0081	-0.0182	0.0094
2	SLU 27	0	0	0	0.0081	-0.0182	0.0094
2	SLU 28	0	0	0	0.0081	-0.0182	0.0094
2	SLU 29	0	0	0	0.0081	-0.0182	0.0094
2	SLU 30	0	0	0	0.0083	-0.019	0.0097
2	SLU 31	0	0	0	0.0083	-0.019	0.0097
2	SLU 32	0	0	0	0.0083	-0.019	0.0097
2	SLU 33	0	0	0	0.0083	-0.019	0.0097
2	SLU 34	0	0	0	0.0057	0	0.007
2	SLU 35	0	0	0	0.0057	0	0.007
2	SLU 36	0	0	0	0.0057	0	0.0071
2	SLU 37	0	0	0	0.0057	0	0.0071
2	SLU 38	0	0	0	0.0057	0	0.0071
2	SLU 39	0	0	0	0.0059	-0.0009	0.0073
2	SLU 40	0	0	0	0.0059	-0.0009	0.0073
2	SLU 41	0	0	0	0.0059	-0.0009	0.0073
2	SLU 42	0	0	0	0.0059	-0.0009	0.0073
2	SLU 43	0	0	0	0.0061	-0.0018	0.0075
2	SLU 44	0	0	0	0.0061	-0.0018	0.0075
2	SLU 45	0	0	0	0.0061	-0.0018	0.0075
2	SLU 46	0	0	0	0.0061	-0.0018	0.0075
2	SLU 47	0	0	0	0.0067	-0.0073	0.008

Nodo	Cont.	Spostamento			Rotazione		
Ind.	N.br.	ux	uy	uz	rx	ry	rz
2	SLU 48	0	0	0	0.0067	-0.0073	0.008
2	SLU 49	0	0	0	0.0067	-0.0073	0.008
2	SLU 50	0	0	0	0.0067	-0.0073	0.008
2	SLU 51	0	0	0	0.0069	-0.0082	0.0082
2	SLU 52	0	0	0	0.0069	-0.0082	0.0082
2	SLU 53	0	0	0	0.0069	-0.0082	0.0083
2	SLU 54	0	0	0	0.0069	-0.0082	0.0083
2	SLU 55	0	0	0	0.0071	-0.009	0.0085
2	SLU 56	0	0	0	0.0071	-0.009	0.0085
2	SLU 57	0	0	0	0.0071	-0.009	0.0085
2	SLU 58	0	0	0	0.0071	-0.009	0.0085
2	SLU 59	0	0	0	0.0081	-0.0182	0.0094
2	SLU 60	0	0	0	0.0081	-0.0182	0.0094
2	SLU 61	0	0	0	0.0081	-0.0182	0.0094
2	SLU 62	0	0	0	0.0081	-0.0182	0.0094
2	SLU 63	0	0	0	0.0083	-0.019	0.0097
2	SLU 64	0	0	0	0.0083	-0.019	0.0097
2	SLU 65	0	0	0	0.0083	-0.019	0.0097
2	SLU 66	0	0	0	0.0083	-0.019	0.0097
2	SLU 67	0	0	0	0.0074	0	0.0092
2	SLU 68	0	0	0	0.0074	0	0.0092
2	SLU 69	0	0	0	0.0074	0	0.0092
2	SLU 70	0	0	0	0.0074	0	0.0092
2	SLU 71	0	0	0	0.0074	0	0.0092
2	SLU 72	0	0	0	0.0076	-0.0009	0.0094
2	SLU 73	0	0	0	0.0076	-0.0009	0.0094
2	SLU 74	0	0	0	0.0076	-0.0009	0.0094
2	SLU 75	0	0	0	0.0076	-0.0009	0.0094
2	SLU 76	0	0	0	0.0078	-0.0018	0.0096
2	SLU 77	0	0	0	0.0078	-0.0018	0.0096
2	SLU 78	0	0	0	0.0078	-0.0018	0.0096
2	SLU 79	0	0	0	0.0078	-0.0018	0.0096
2	SLU 80	0	0	0	0.0084	-0.0073	0.0101
2	SLU 81	0	0	0	0.0084	-0.0073	0.0101
2	SLU 82	0	0	0	0.0084	-0.0073	0.0101
2	SLU 83	0	0	0	0.0084	-0.0073	0.0101
2	SLU 84	0	0	0	0.0086	-0.0082	0.0103
2	SLU 85	0	0	0	0.0086	-0.0082	0.0104
2	SLU 86	0	0	0	0.0086	-0.0082	0.0104
2	SLU 87	0	0	0	0.0086	-0.0082	0.0104
2	SLU 88	0	0	0	0.0088	-0.009	0.0106
2	SLU 89	0	0	0	0.0088	-0.009	0.0106
2	SLU 90	0	0	0	0.0088	-0.009	0.0106
2	SLU 91	0	0	0	0.0088	-0.009	0.0106
2	SLU 92	0	0	0	0.0098	-0.0182	0.0115
2	SLU 93	0	0	0	0.0098	-0.0182	0.0115
2	SLU 94	0	0	0	0.0098	-0.0182	0.0115
2	SLU 95	0	0	0	0.0098	-0.0182	0.0115
2	SLU 96	0	0	0	0.01	-0.0191	0.0118
2	SLU 97	0	0	0	0.01	-0.0191	0.0118
2	SLU 98	0	0	0	0.01	-0.0191	0.0118
2	SLU 99	0	0	0	0.01	-0.0191	0.0118
2	SLU 100	0	0	0	0.0074	0	0.0092
2	SLU 101	0	0	0	0.0074	0	0.0092
2	SLU 102	0	0	0	0.0074	0	0.0092
2	SLU 103	0	0	0	0.0074	0	0.0092
2	SLU 104	0	0	0	0.0074	0	0.0092
2	SLU 105	0	0	0	0.0076	-0.0009	0.0094
2	SLU 106	0	0	0	0.0076	-0.0009	0.0094
2	SLU 107	0	0	0	0.0076	-0.0009	0.0094
2	SLU 108	0	0	0	0.0076	-0.0009	0.0094
2	SLU 109	0	0	0	0.0078	-0.0018	0.0096
2	SLU 110	0	0	0	0.0078	-0.0018	0.0096
2	SLU 111	0	0	0	0.0078	-0.0018	0.0096
2	SLU 112	0	0	0	0.0078	-0.0018	0.0096
2	SLU 113	0	0	0	0.0084	-0.0073	0.0101
2	SLU 114	0	0	0	0.0084	-0.0073	0.0101
2	SLU 115	0	0	0	0.0084	-0.0073	0.0101
2	SLU 116	0	0	0	0.0084	-0.0073	0.0101
2	SLU 117	0	0	0	0.0086	-0.0082	0.0103
2	SLU 118	0	0	0	0.0086	-0.0082	0.0104
2	SLU 119	0	0	0	0.0086	-0.0082	0.0104
2	SLU 120	0	0	0	0.0086	-0.0082	0.0104
2	SLU 121	0	0	0	0.0088	-0.009	0.0106
2	SLU 122	0	0	0	0.0088	-0.009	0.0106
2	SLU 123	0	0	0	0.0088	-0.009	0.0106
2	SLU 124	0	0	0	0.0088	-0.009	0.0106
2	SLU 125	0	0	0	0.0098	-0.0182	0.0115
2	SLU 126	0	0	0	0.0098	-0.0182	0.0115
2	SLU 127	0	0	0	0.0098	-0.0182	0.0115
2	SLU 128	0	0	0	0.0098	-0.0182	0.0115
2	SLU 129	0	0	0	0.01	-0.0191	0.0118
2	SLU 130	0	0	0	0.01	-0.0191	0.0118
2	SLU 131	0	0	0	0.01	-0.0191	0.0118
2	SLU 132	0	0	0	0.01	-0.0191	0.0118
2	SLE RA 1	0	0	0	0.0057	0	0.007
2	SLE RA 2	0	0	0	0.0057	0	0.007
2	SLE RA 3	0	0	0	0.0057	0	0.0071
2	SLE RA 4	0	0	0	0.0057	0	0.0071
2	SLE RA 5	0	0	0	0.0057	0	0.0071
2	SLE RA 6	0	0	0	0.0058	-0.0006	0.0072
2	SLE RA 7	0	0	0	0.0058	-0.0006	0.0072
2	SLE RA 8	0	0	0	0.0059	-0.0006	0.0072
2	SLE RA 9	0	0	0	0.0059	-0.0006	0.0072
2	SLE RA 10	0	0	0	0.006	-0.0012	0.0074

Nodo	Cont.	Spostamento			Rotazione		
Ind.	N.br.	ux	uy	uz	rx	ry	rz
2	SLE RA 11	0	0	0	0.006	-0.0012	0.0074
2	SLE RA 12	0	0	0	0.006	-0.0012	0.0074
2	SLE RA 13	0	0	0	0.006	-0.0012	0.0074
2	SLE RA 14	0	0	0	0.0064	-0.0049	0.0077
2	SLE RA 15	0	0	0	0.0064	-0.0049	0.0077
2	SLE RA 16	0	0	0	0.0064	-0.0049	0.0077
2	SLE RA 17	0	0	0	0.0064	-0.0049	0.0077
2	SLE RA 18	0	0	0	0.0065	-0.0054	0.0078
2	SLE RA 19	0	0	0	0.0065	-0.0054	0.0078
2	SLE RA 20	0	0	0	0.0065	-0.0054	0.0079
2	SLE RA 21	0	0	0	0.0065	-0.0054	0.0079
2	SLE RA 22	0	0	0	0.0066	-0.006	0.008
2	SLE RA 23	0	0	0	0.0066	-0.006	0.008
2	SLE RA 24	0	0	0	0.0066	-0.006	0.008
2	SLE RA 25	0	0	0	0.0066	-0.006	0.008
2	SLE RA 26	0	0	0	0.0073	-0.0121	0.0086
2	SLE RA 27	0	0	0	0.0073	-0.0121	0.0086
2	SLE RA 28	0	0	0	0.0073	-0.0121	0.0086
2	SLE RA 29	0	0	0	0.0073	-0.0121	0.0086
2	SLE RA 30	0	0	0	0.0074	-0.0127	0.0088
2	SLE RA 31	0	0	0	0.0074	-0.0127	0.0088
2	SLE RA 32	0	0	0	0.0074	-0.0127	0.0088
2	SLE RA 33	0	0	0	0.0074	-0.0127	0.0088
2	SLE FR 1	0	0	0	0.0057	0	0.007
2	SLE FR 2	0	0	0	0.0057	0	0.007
2	SLE FR 3	0	0	0	0.0057	0	0.0071
2	SLE FR 4	0	0	0	0.0058	-0.0003	0.0071
2	SLE FR 5	0	0	0	0.0064	-0.0049	0.0077
2	SLE QP 1	0	0	0	0.0057	0	0.007
2	SLO 1	0	0	0	-0.089	-0.0536	-0.2143
2	SLO 2	0	0	0	-0.089	-0.0536	-0.2143
2	SLO 3	0	0	0	0.1008	-0.0536	0.2293
2	SLO 4	0	0	0	0.1008	-0.0536	0.2293
2	SLO 5	0	0	0	-0.3107	-0.0161	-0.7322
2	SLO 6	0	0	0	-0.3107	-0.0161	-0.7322
2	SLO 7	0	0	0	0.3222	-0.0161	0.7466
2	SLO 8	0	0	0	0.3222	-0.0161	0.7466
2	SLO 9	0	0	0	-0.3108	0.016	-0.7325
2	SLO 10	0	0	0	-0.3108	0.016	-0.7325
2	SLO 11	0	0	0	0.3221	0.016	0.7463
2	SLO 12	0	0	0	0.3221	0.016	0.7463
2	SLO 13	0	0	0	-0.0894	0.0535	-0.2152
2	SLO 14	0	0	0	-0.0894	0.0535	-0.2152
2	SLO 15	0	0	0	0.1005	0.0535	0.2284
2	SLO 16	0	0	0	0.1005	0.0535	0.2284
2	SLD 1	0	0	0	-0.0819	-0.044	-0.1975
2	SLD 2	0	0	0	-0.0819	-0.044	-0.1975
2	SLD 3	0	0	0	0.0936	-0.044	0.2124
2	SLD 4	0	0	0	0.0936	-0.044	0.2124
2	SLD 5	0	0	0	-0.2866	-0.0132	-0.676
2	SLD 6	0	0	0	-0.2866	-0.0132	-0.676
2	SLD 7	0	0	0	0.2982	-0.0132	0.6903
2	SLD 8	0	0	0	0.2982	-0.0132	0.6903
2	SLD 9	0	0	0	-0.2867	0.0132	-0.6762
2	SLD 10	0	0	0	-0.2867	0.0132	-0.6762
2	SLD 11	0	0	0	0.2981	0.0131	0.6901
2	SLD 12	0	0	0	0.2981	0.0131	0.6901
2	SLD 13	0	0	0	-0.0821	0.0439	-0.1983
2	SLD 14	0	0	0	-0.0821	0.0439	-0.1983
2	SLD 15	0	0	0	0.0933	0.0439	0.2116
2	SLD 16	0	0	0	0.0933	0.0439	0.2116
2	SLV 1	0	0	0	-0.2253	-0.0982	-0.5327
2	SLV 2	0	0	0	-0.2253	-0.0982	-0.5327
2	SLV 3	0	0	0	0.2374	-0.0982	0.5484
2	SLV 4	0	0	0	0.2374	-0.0982	0.5484
2	SLV 5	0	0	0	-0.7654	-0.0295	-1.7946
2	SLV 6	0	0	0	-0.7654	-0.0295	-1.7946
2	SLV 7	0	0	0	0.777	-0.0295	1.8092
2	SLV 8	0	0	0	0.777	-0.0295	1.8092
2	SLV 9	0	0	0	-0.7656	0.0295	-1.7951
2	SLV 10	0	0	0	-0.7656	0.0295	-1.7951
2	SLV 11	0	0	0	0.7768	0.0294	1.8087
2	SLV 12	0	0	0	0.7768	0.0294	1.8087
2	SLV 13	0	0	0	-0.226	0.0981	-0.5343
2	SLV 14	0	0	0	-0.226	0.0981	-0.5343
2	SLV 15	0	0	0	0.2368	0.0981	0.5468
2	SLV 16	0	0	0	0.2368	0.0981	0.5468
3	SLU 1	0	0	0	0.0057	0	-0.007
3	SLU 2	0	0	0	0.0057	0	-0.007
3	SLU 3	0	0	0	0.0057	0	-0.0071
3	SLU 4	0	0	0	0.0057	0	-0.0071
3	SLU 5	0	0	0	0.0057	0	-0.0071
3	SLU 6	0	0	0	0.0059	0.0009	-0.0073
3	SLU 7	0	0	0	0.0059	0.0009	-0.0073
3	SLU 8	0	0	0	0.0059	0.0009	-0.0073
3	SLU 9	0	0	0	0.0059	0.0009	-0.0073
3	SLU 10	0	0	0	0.0061	0.0018	-0.0075
3	SLU 11	0	0	0	0.0061	0.0018	-0.0075
3	SLU 12	0	0	0	0.0061	0.0018	-0.0075
3	SLU 13	0	0	0	0.0061	0.0018	-0.0075
3	SLU 14	0	0	0	0.0067	0.0073	-0.008
3	SLU 15	0	0	0	0.0067	0.0073	-0.008
3	SLU 16	0	0	0	0.0067	0.0073	-0.008
3	SLU 17	0	0	0	0.0067	0.0073	-0.008
3	SLU 18	0	0	0	0.0069	0.0082	-0.0082

Nodo	Cont.	Spostamento			Rotazione		
Ind.	N.br.	ux	uy	uz	rx	ry	rz
3	SLU 19	0	0	0	0.0069	0.0082	-0.0082
3	SLU 20	0	0	0	0.0069	0.0082	-0.0082
3	SLU 21	0	0	0	0.0069	0.0082	-0.0082
3	SLU 22	0	0	0	0.0071	0.0091	-0.0084
3	SLU 23	0	0	0	0.0071	0.0091	-0.0084
3	SLU 24	0	0	0	0.0071	0.0091	-0.0084
3	SLU 25	0	0	0	0.0071	0.0091	-0.0085
3	SLU 26	0	0	0	0.0081	0.0183	-0.0094
3	SLU 27	0	0	0	0.0081	0.0183	-0.0094
3	SLU 28	0	0	0	0.0081	0.0183	-0.0094
3	SLU 29	0	0	0	0.0081	0.0183	-0.0094
3	SLU 30	0	0	0	0.0083	0.0192	-0.0096
3	SLU 31	0	0	0	0.0083	0.0192	-0.0096
3	SLU 32	0	0	0	0.0083	0.0192	-0.0096
3	SLU 33	0	0	0	0.0083	0.0192	-0.0096
3	SLU 34	0	0	0	0.0057	0	-0.007
3	SLU 35	0	0	0	0.0057	0	-0.007
3	SLU 36	0	0	0	0.0057	0	-0.0071
3	SLU 37	0	0	0	0.0057	0	-0.0071
3	SLU 38	0	0	0	0.0057	0	-0.0071
3	SLU 39	0	0	0	0.0059	0.0009	-0.0073
3	SLU 40	0	0	0	0.0059	0.0009	-0.0073
3	SLU 41	0	0	0	0.0059	0.0009	-0.0073
3	SLU 42	0	0	0	0.0059	0.0009	-0.0073
3	SLU 43	0	0	0	0.0061	0.0018	-0.0075
3	SLU 44	0	0	0	0.0061	0.0018	-0.0075
3	SLU 45	0	0	0	0.0061	0.0018	-0.0075
3	SLU 46	0	0	0	0.0061	0.0018	-0.0075
3	SLU 47	0	0	0	0.0067	0.0073	-0.008
3	SLU 48	0	0	0	0.0067	0.0073	-0.008
3	SLU 49	0	0	0	0.0067	0.0073	-0.008
3	SLU 50	0	0	0	0.0067	0.0073	-0.008
3	SLU 51	0	0	0	0.0069	0.0082	-0.0082
3	SLU 52	0	0	0	0.0069	0.0082	-0.0082
3	SLU 53	0	0	0	0.0069	0.0082	-0.0082
3	SLU 54	0	0	0	0.0069	0.0082	-0.0082
3	SLU 55	0	0	0	0.0071	0.0091	-0.0084
3	SLU 56	0	0	0	0.0071	0.0091	-0.0084
3	SLU 57	0	0	0	0.0071	0.0091	-0.0084
3	SLU 58	0	0	0	0.0071	0.0091	-0.0085
3	SLU 59	0	0	0	0.0081	0.0183	-0.0094
3	SLU 60	0	0	0	0.0081	0.0183	-0.0094
3	SLU 61	0	0	0	0.0081	0.0183	-0.0094
3	SLU 62	0	0	0	0.0081	0.0183	-0.0094
3	SLU 63	0	0	0	0.0083	0.0192	-0.0096
3	SLU 64	0	0	0	0.0083	0.0192	-0.0096
3	SLU 65	0	0	0	0.0083	0.0192	-0.0096
3	SLU 66	0	0	0	0.0083	0.0192	-0.0096
3	SLU 67	0	0	0	0.0074	0	-0.0092
3	SLU 68	0	0	0	0.0074	0	-0.0092
3	SLU 69	0	0	0	0.0074	0	-0.0092
3	SLU 70	0	0	0	0.0074	0	-0.0092
3	SLU 71	0	0	0	0.0074	0	-0.0092
3	SLU 72	0	0	0	0.0076	0.0009	-0.0094
3	SLU 73	0	0	0	0.0076	0.0009	-0.0094
3	SLU 74	0	0	0	0.0076	0.0009	-0.0094
3	SLU 75	0	0	0	0.0076	0.0009	-0.0094
3	SLU 76	0	0	0	0.0078	0.0018	-0.0096
3	SLU 77	0	0	0	0.0078	0.0018	-0.0096
3	SLU 78	0	0	0	0.0078	0.0018	-0.0096
3	SLU 79	0	0	0	0.0078	0.0018	-0.0096
3	SLU 80	0	0	0	0.0084	0.0073	-0.0101
3	SLU 81	0	0	0	0.0084	0.0073	-0.0101
3	SLU 82	0	0	0	0.0084	0.0073	-0.0101
3	SLU 83	0	0	0	0.0084	0.0073	-0.0101
3	SLU 84	0	0	0	0.0086	0.0082	-0.0103
3	SLU 85	0	0	0	0.0086	0.0082	-0.0103
3	SLU 86	0	0	0	0.0086	0.0082	-0.0104
3	SLU 87	0	0	0	0.0086	0.0082	-0.0104
3	SLU 88	0	0	0	0.0088	0.0091	-0.0106
3	SLU 89	0	0	0	0.0088	0.0091	-0.0106
3	SLU 90	0	0	0	0.0088	0.0091	-0.0106
3	SLU 91	0	0	0	0.0088	0.0091	-0.0106
3	SLU 92	0	0	0	0.0098	0.0183	-0.0115
3	SLU 93	0	0	0	0.0098	0.0183	-0.0115
3	SLU 94	0	0	0	0.0098	0.0183	-0.0115
3	SLU 95	0	0	0	0.0098	0.0183	-0.0115
3	SLU 96	0	0	0	0.01	0.0192	-0.0117
3	SLU 97	0	0	0	0.01	0.0192	-0.0117
3	SLU 98	0	0	0	0.01	0.0192	-0.0117
3	SLU 99	0	0	0	0.01	0.0192	-0.0117
3	SLU 100	0	0	0	0.0074	0	-0.0092
3	SLU 101	0	0	0	0.0074	0	-0.0092
3	SLU 102	0	0	0	0.0074	0	-0.0092
3	SLU 103	0	0	0	0.0074	0	-0.0092
3	SLU 104	0	0	0	0.0074	0	-0.0092
3	SLU 105	0	0	0	0.0076	0.0009	-0.0094
3	SLU 106	0	0	0	0.0076	0.0009	-0.0094
3	SLU 107	0	0	0	0.0076	0.0009	-0.0094
3	SLU 108	0	0	0	0.0076	0.0009	-0.0094
3	SLU 109	0	0	0	0.0078	0.0018	-0.0096
3	SLU 110	0	0	0	0.0078	0.0018	-0.0096
3	SLU 111	0	0	0	0.0078	0.0018	-0.0096
3	SLU 112	0	0	0	0.0078	0.0018	-0.0096
3	SLU 113	0	0	0	0.0084	0.0073	-0.0101

Nodo	Cont.	Spostamento			Rotazione		
Ind.	N.br.	ux	uy	uz	rx	ry	rz
3	SLU 114	0	0	0	0.0084	0.0073	-0.0101
3	SLU 115	0	0	0	0.0084	0.0073	-0.0101
3	SLU 116	0	0	0	0.0084	0.0073	-0.0101
3	SLU 117	0	0	0	0.0086	0.0082	-0.0103
3	SLU 118	0	0	0	0.0086	0.0082	-0.0103
3	SLU 119	0	0	0	0.0086	0.0082	-0.0104
3	SLU 120	0	0	0	0.0086	0.0082	-0.0104
3	SLU 121	0	0	0	0.0088	0.0091	-0.0106
3	SLU 122	0	0	0	0.0088	0.0091	-0.0106
3	SLU 123	0	0	0	0.0088	0.0091	-0.0106
3	SLU 124	0	0	0	0.0088	0.0091	-0.0106
3	SLU 125	0	0	0	0.0098	0.0183	-0.0115
3	SLU 126	0	0	0	0.0098	0.0183	-0.0115
3	SLU 127	0	0	0	0.0098	0.0183	-0.0115
3	SLU 128	0	0	0	0.0098	0.0183	-0.0115
3	SLU 129	0	0	0	0.01	0.0192	-0.0117
3	SLU 130	0	0	0	0.01	0.0192	-0.0117
3	SLU 131	0	0	0	0.01	0.0192	-0.0117
3	SLU 132	0	0	0	0.01	0.0192	-0.0117
3	SLE RA 1	0	0	0	0.0057	0	-0.007
3	SLE RA 2	0	0	0	0.0057	0	-0.007
3	SLE RA 3	0	0	0	0.0057	0	-0.0071
3	SLE RA 4	0	0	0	0.0057	0	-0.0071
3	SLE RA 5	0	0	0	0.0057	0	-0.0071
3	SLE RA 6	0	0	0	0.0058	0.0006	-0.0072
3	SLE RA 7	0	0	0	0.0058	0.0006	-0.0072
3	SLE RA 8	0	0	0	0.0059	0.0006	-0.0072
3	SLE RA 9	0	0	0	0.0059	0.0006	-0.0072
3	SLE RA 10	0	0	0	0.006	0.0012	-0.0073
3	SLE RA 11	0	0	0	0.006	0.0012	-0.0074
3	SLE RA 12	0	0	0	0.006	0.0012	-0.0074
3	SLE RA 13	0	0	0	0.006	0.0012	-0.0074
3	SLE RA 14	0	0	0	0.0064	0.0049	-0.0077
3	SLE RA 15	0	0	0	0.0064	0.0049	-0.0077
3	SLE RA 16	0	0	0	0.0064	0.0049	-0.0077
3	SLE RA 17	0	0	0	0.0064	0.0049	-0.0077
3	SLE RA 18	0	0	0	0.0065	0.0055	-0.0078
3	SLE RA 19	0	0	0	0.0065	0.0055	-0.0078
3	SLE RA 20	0	0	0	0.0065	0.0055	-0.0078
3	SLE RA 21	0	0	0	0.0065	0.0055	-0.0078
3	SLE RA 22	0	0	0	0.0066	0.0061	-0.008
3	SLE RA 23	0	0	0	0.0066	0.0061	-0.008
3	SLE RA 24	0	0	0	0.0066	0.0061	-0.008
3	SLE RA 25	0	0	0	0.0066	0.0061	-0.008
3	SLE RA 26	0	0	0	0.0073	0.0122	-0.0086
3	SLE RA 27	0	0	0	0.0073	0.0122	-0.0086
3	SLE RA 28	0	0	0	0.0073	0.0122	-0.0086
3	SLE RA 29	0	0	0	0.0073	0.0122	-0.0086
3	SLE RA 30	0	0	0	0.0074	0.0128	-0.0088
3	SLE RA 31	0	0	0	0.0074	0.0128	-0.0088
3	SLE RA 32	0	0	0	0.0074	0.0128	-0.0088
3	SLE RA 33	0	0	0	0.0074	0.0128	-0.0088
3	SLE FR 1	0	0	0	0.0057	0	-0.007
3	SLE FR 2	0	0	0	0.0057	0	-0.007
3	SLE FR 3	0	0	0	0.0057	0	-0.0071
3	SLE FR 4	0	0	0	0.0058	0.0003	-0.0071
3	SLE FR 5	0	0	0	0.0064	0.0049	-0.0077
3	SLE QP 1	0	0	0	0.0057	0	-0.007
3	SLO 1	0	0	0	-0.0894	-0.0535	0.2152
3	SLO 2	0	0	0	-0.0894	-0.0535	0.2152
3	SLO 3	0	0	0	0.1005	-0.0535	-0.2284
3	SLO 4	0	0	0	0.1005	-0.0535	-0.2284
3	SLO 5	0	0	0	-0.3108	-0.016	0.7325
3	SLO 6	0	0	0	-0.3108	-0.016	0.7325
3	SLO 7	0	0	0	0.3221	-0.016	-0.7463
3	SLO 8	0	0	0	0.3221	-0.016	-0.7463
3	SLO 9	0	0	0	-0.3107	0.0161	0.7322
3	SLO 10	0	0	0	-0.3107	0.0161	0.7322
3	SLO 11	0	0	0	0.3222	0.0161	-0.7466
3	SLO 12	0	0	0	0.3222	0.0161	-0.7466
3	SLO 13	0	0	0	-0.089	0.0536	0.2143
3	SLO 14	0	0	0	-0.089	0.0536	0.2143
3	SLO 15	0	0	0	0.1008	0.0536	-0.2293
3	SLO 16	0	0	0	0.1008	0.0536	-0.2293
3	SLD 1	0	0	0	-0.0821	-0.0439	0.1983
3	SLD 2	0	0	0	-0.0821	-0.0439	0.1983
3	SLD 3	0	0	0	0.0933	-0.0439	-0.2116
3	SLD 4	0	0	0	0.0933	-0.0439	-0.2116
3	SLD 5	0	0	0	-0.2867	-0.0132	0.6762
3	SLD 6	0	0	0	-0.2867	-0.0132	0.6762
3	SLD 7	0	0	0	0.2981	-0.0131	-0.6901
3	SLD 8	0	0	0	0.2981	-0.0131	-0.6901
3	SLD 9	0	0	0	-0.2866	0.0132	0.676
3	SLD 10	0	0	0	-0.2866	0.0132	0.676
3	SLD 11	0	0	0	0.2982	0.0132	-0.6903
3	SLD 12	0	0	0	0.2982	0.0132	-0.6903
3	SLD 13	0	0	0	-0.0819	0.044	0.1975
3	SLD 14	0	0	0	-0.0819	0.044	0.1975
3	SLD 15	0	0	0	0.0936	0.044	-0.2124
3	SLD 16	0	0	0	0.0936	0.044	-0.2124
3	SLV 1	0	0	0	-0.226	-0.0981	0.5343
3	SLV 2	0	0	0	-0.226	-0.0981	0.5343
3	SLV 3	0	0	0	0.2368	-0.0981	-0.5468
3	SLV 4	0	0	0	0.2368	-0.0981	-0.5468
3	SLV 5	0	0	0	-0.7656	-0.0295	1.7951

Nodo	Cont.	Spostamento			Rotazione		
Ind.	N.br.	ux	uy	uz	rx	ry	rz
3	SLV 6	0	0	0	-0.7656	-0.0295	1.7951
3	SLV 7	0	0	0	0.7768	-0.0294	-1.8087
3	SLV 8	0	0	0	0.7768	-0.0294	-1.8087
3	SLV 9	0	0	0	-0.7654	0.0295	1.7946
3	SLV 10	0	0	0	-0.7654	0.0295	1.7946
3	SLV 11	0	0	0	0.777	0.0295	-1.8092
3	SLV 12	0	0	0	0.777	0.0295	-1.8092
3	SLV 13	0	0	0	-0.2253	0.0982	0.5327
3	SLV 14	0	0	0	-0.2253	0.0982	0.5327
3	SLV 15	0	0	0	0.2374	0.0982	-0.5484
3	SLV 16	0	0	0	0.2374	0.0982	-0.5484
4	SLU 1	0	0	0	0.0025	-0.0006	0.0037
4	SLU 2	0	0	0	0.0025	-0.0006	0.0037
4	SLU 3	0	0	0	0.0025	-0.0006	0.0037
4	SLU 4	0	0	0	0.0025	-0.0006	0.0037
4	SLU 5	0	0	0	0.0025	-0.0006	0.0037
4	SLU 6	0	0	0	0.0026	-0.0024	0.0038
4	SLU 7	0	0	0	0.0026	-0.0024	0.0038
4	SLU 8	0	0	0	0.0026	-0.0024	0.0038
4	SLU 9	0	0	0	0.0026	-0.0024	0.0038
4	SLU 10	0	0	0	0.0027	-0.0042	0.0038
4	SLU 11	0	0	0	0.0027	-0.0042	0.0039
4	SLU 12	0	0	0	0.0027	-0.0042	0.0039
4	SLU 13	0	0	0	0.0027	-0.0042	0.0039
4	SLU 14	0	0	0	0.003	-0.0153	0.0042
4	SLU 15	0	0	0	0.003	-0.0153	0.0042
4	SLU 16	0	0	0	0.003	-0.0153	0.0042
4	SLU 17	0	0	0	0.003	-0.0153	0.0042
4	SLU 18	0	0	0	0.003	-0.0171	0.0043
4	SLU 19	0	0	0	0.003	-0.0171	0.0043
4	SLU 20	0	0	0	0.0031	-0.0171	0.0043
4	SLU 21	0	0	0	0.0031	-0.0171	0.0043
4	SLU 22	0	0	0	0.0031	-0.0189	0.0044
4	SLU 23	0	0	0	0.0031	-0.0189	0.0044
4	SLU 24	0	0	0	0.0031	-0.0189	0.0044
4	SLU 25	0	0	0	0.0031	-0.0189	0.0044
4	SLU 26	0	0	0	0.0036	-0.0374	0.005
4	SLU 27	0	0	0	0.0036	-0.0374	0.0051
4	SLU 28	0	0	0	0.0036	-0.0374	0.0051
4	SLU 29	0	0	0	0.0036	-0.0374	0.0051
4	SLU 30	0	0	0	0.0037	-0.0392	0.0051
4	SLU 31	0	0	0	0.0037	-0.0392	0.0052
4	SLU 32	0	0	0	0.0037	-0.0392	0.0052
4	SLU 33	0	0	0	0.0037	-0.0392	0.0052
4	SLU 34	0	0	0	0.0025	-0.0006	0.0037
4	SLU 35	0	0	0	0.0025	-0.0006	0.0037
4	SLU 36	0	0	0	0.0025	-0.0006	0.0037
4	SLU 37	0	0	0	0.0025	-0.0006	0.0037
4	SLU 38	0	0	0	0.0025	-0.0006	0.0037
4	SLU 39	0	0	0	0.0026	-0.0024	0.0038
4	SLU 40	0	0	0	0.0026	-0.0024	0.0038
4	SLU 41	0	0	0	0.0026	-0.0024	0.0038
4	SLU 42	0	0	0	0.0026	-0.0024	0.0038
4	SLU 43	0	0	0	0.0027	-0.0042	0.0038
4	SLU 44	0	0	0	0.0027	-0.0042	0.0039
4	SLU 45	0	0	0	0.0027	-0.0042	0.0039
4	SLU 46	0	0	0	0.0027	-0.0042	0.0039
4	SLU 47	0	0	0	0.003	-0.0153	0.0042
4	SLU 48	0	0	0	0.003	-0.0153	0.0042
4	SLU 49	0	0	0	0.003	-0.0153	0.0042
4	SLU 50	0	0	0	0.003	-0.0153	0.0042
4	SLU 51	0	0	0	0.003	-0.0171	0.0043
4	SLU 52	0	0	0	0.003	-0.0171	0.0043
4	SLU 53	0	0	0	0.0031	-0.0171	0.0043
4	SLU 54	0	0	0	0.0031	-0.0171	0.0043
4	SLU 55	0	0	0	0.0031	-0.0189	0.0044
4	SLU 56	0	0	0	0.0031	-0.0189	0.0044
4	SLU 57	0	0	0	0.0031	-0.0189	0.0044
4	SLU 58	0	0	0	0.0031	-0.0189	0.0044
4	SLU 59	0	0	0	0.0036	-0.0374	0.005
4	SLU 60	0	0	0	0.0036	-0.0374	0.0051
4	SLU 61	0	0	0	0.0036	-0.0374	0.0051
4	SLU 62	0	0	0	0.0036	-0.0374	0.0051
4	SLU 63	0	0	0	0.0037	-0.0392	0.0051
4	SLU 64	0	0	0	0.0037	-0.0392	0.0052
4	SLU 65	0	0	0	0.0037	-0.0392	0.0052
4	SLU 66	0	0	0	0.0037	-0.0392	0.0052
4	SLU 67	0	0	0	0.0033	-0.0008	0.0047
4	SLU 68	0	0	0	0.0033	-0.0008	0.0048
4	SLU 69	0	0	0	0.0033	-0.0008	0.0048
4	SLU 70	0	0	0	0.0033	-0.0008	0.0048
4	SLU 71	0	0	0	0.0033	-0.0008	0.0048
4	SLU 72	0	0	0	0.0034	-0.0026	0.0049
4	SLU 73	0	0	0	0.0034	-0.0026	0.0049
4	SLU 74	0	0	0	0.0034	-0.0026	0.0049
4	SLU 75	0	0	0	0.0034	-0.0026	0.0049
4	SLU 76	0	0	0	0.0034	-0.0044	0.0049
4	SLU 77	0	0	0	0.0034	-0.0044	0.0049
4	SLU 78	0	0	0	0.0034	-0.0044	0.005
4	SLU 79	0	0	0	0.0034	-0.0044	0.005
4	SLU 80	0	0	0	0.0037	-0.0155	0.0053
4	SLU 81	0	0	0	0.0037	-0.0155	0.0053
4	SLU 82	0	0	0	0.0037	-0.0155	0.0053
4	SLU 83	0	0	0	0.0037	-0.0155	0.0053
4	SLU 84	0	0	0	0.0038	-0.0173	0.0054

Nodo	Cont.	Spostamento			Rotazione		
Ind.	N.br.	ux	uy	uz	rx	ry	rz
4	SLU 85	0	0	0	0.0038	-0.0173	0.0054
4	SLU 86	0	0	0	0.0038	-0.0173	0.0054
4	SLU 87	0	0	0	0.0038	-0.0173	0.0054
4	SLU 88	0	0	0	0.0039	-0.0191	0.0055
4	SLU 89	0	0	0	0.0039	-0.0191	0.0055
4	SLU 90	0	0	0	0.0039	-0.0191	0.0055
4	SLU 91	0	0	0	0.0039	-0.0191	0.0055
4	SLU 92	0	0	0	0.0044	-0.0376	0.0061
4	SLU 93	0	0	0	0.0044	-0.0376	0.0061
4	SLU 94	0	0	0	0.0044	-0.0376	0.0062
4	SLU 95	0	0	0	0.0044	-0.0376	0.0062
4	SLU 96	0	0	0	0.0045	-0.0394	0.0062
4	SLU 97	0	0	0	0.0045	-0.0394	0.0062
4	SLU 98	0	0	0	0.0045	-0.0394	0.0062
4	SLU 99	0	0	0	0.0045	-0.0394	0.0063
4	SLU 100	0	0	0	0.0033	-0.0008	0.0047
4	SLU 101	0	0	0	0.0033	-0.0008	0.0048
4	SLU 102	0	0	0	0.0033	-0.0008	0.0048
4	SLU 103	0	0	0	0.0033	-0.0008	0.0048
4	SLU 104	0	0	0	0.0033	-0.0008	0.0048
4	SLU 105	0	0	0	0.0034	-0.0026	0.0049
4	SLU 106	0	0	0	0.0034	-0.0026	0.0049
4	SLU 107	0	0	0	0.0034	-0.0026	0.0049
4	SLU 108	0	0	0	0.0034	-0.0026	0.0049
4	SLU 109	0	0	0	0.0034	-0.0044	0.0049
4	SLU 110	0	0	0	0.0034	-0.0044	0.0049
4	SLU 111	0	0	0	0.0034	-0.0044	0.005
4	SLU 112	0	0	0	0.0034	-0.0044	0.005
4	SLU 113	0	0	0	0.0037	-0.0155	0.0053
4	SLU 114	0	0	0	0.0037	-0.0155	0.0053
4	SLU 115	0	0	0	0.0037	-0.0155	0.0053
4	SLU 116	0	0	0	0.0037	-0.0155	0.0053
4	SLU 117	0	0	0	0.0038	-0.0173	0.0054
4	SLU 118	0	0	0	0.0038	-0.0173	0.0054
4	SLU 119	0	0	0	0.0038	-0.0173	0.0054
4	SLU 120	0	0	0	0.0038	-0.0173	0.0054
4	SLU 121	0	0	0	0.0039	-0.0191	0.0055
4	SLU 122	0	0	0	0.0039	-0.0191	0.0055
4	SLU 123	0	0	0	0.0039	-0.0191	0.0055
4	SLU 124	0	0	0	0.0039	-0.0191	0.0055
4	SLU 125	0	0	0	0.0044	-0.0376	0.0061
4	SLU 126	0	0	0	0.0044	-0.0376	0.0061
4	SLU 127	0	0	0	0.0044	-0.0376	0.0062
4	SLU 128	0	0	0	0.0044	-0.0376	0.0062
4	SLU 129	0	0	0	0.0045	-0.0394	0.0062
4	SLU 130	0	0	0	0.0045	-0.0394	0.0062
4	SLU 131	0	0	0	0.0045	-0.0394	0.0062
4	SLU 132	0	0	0	0.0045	-0.0394	0.0063
4	SLE RA 1	0	0	0	0.0025	-0.0006	0.0037
4	SLE RA 2	0	0	0	0.0025	-0.0006	0.0037
4	SLE RA 3	0	0	0	0.0025	-0.0006	0.0037
4	SLE RA 4	0	0	0	0.0025	-0.0006	0.0037
4	SLE RA 5	0	0	0	0.0025	-0.0006	0.0037
4	SLE RA 6	0	0	0	0.0026	-0.0018	0.0037
4	SLE RA 7	0	0	0	0.0026	-0.0018	0.0037
4	SLE RA 8	0	0	0	0.0026	-0.0018	0.0037
4	SLE RA 9	0	0	0	0.0026	-0.0018	0.0037
4	SLE RA 10	0	0	0	0.0026	-0.003	0.0038
4	SLE RA 11	0	0	0	0.0026	-0.003	0.0038
4	SLE RA 12	0	0	0	0.0026	-0.003	0.0038
4	SLE RA 13	0	0	0	0.0026	-0.003	0.0038
4	SLE RA 14	0	0	0	0.0028	-0.0104	0.004
4	SLE RA 15	0	0	0	0.0028	-0.0104	0.004
4	SLE RA 16	0	0	0	0.0028	-0.0104	0.004
4	SLE RA 17	0	0	0	0.0028	-0.0104	0.004
4	SLE RA 18	0	0	0	0.0029	-0.0116	0.0041
4	SLE RA 19	0	0	0	0.0029	-0.0116	0.0041
4	SLE RA 20	0	0	0	0.0029	-0.0116	0.0041
4	SLE RA 21	0	0	0	0.0029	-0.0116	0.0041
4	SLE RA 22	0	0	0	0.0029	-0.0128	0.0042
4	SLE RA 23	0	0	0	0.0029	-0.0128	0.0042
4	SLE RA 24	0	0	0	0.0029	-0.0128	0.0042
4	SLE RA 25	0	0	0	0.0029	-0.0128	0.0042
4	SLE RA 26	0	0	0	0.0033	-0.0251	0.0046
4	SLE RA 27	0	0	0	0.0033	-0.0251	0.0046
4	SLE RA 28	0	0	0	0.0033	-0.0251	0.0046
4	SLE RA 29	0	0	0	0.0033	-0.0251	0.0046
4	SLE RA 30	0	0	0	0.0033	-0.0263	0.0046
4	SLE RA 31	0	0	0	0.0033	-0.0263	0.0047
4	SLE RA 32	0	0	0	0.0033	-0.0263	0.0047
4	SLE RA 33	0	0	0	0.0033	-0.0263	0.0047
4	SLE FR 1	0	0	0	0.0025	-0.0006	0.0037
4	SLE FR 2	0	0	0	0.0025	-0.0006	0.0037
4	SLE FR 3	0	0	0	0.0025	-0.0006	0.0037
4	SLE FR 4	0	0	0	0.0025	-0.0011	0.0037
4	SLE FR 5	0	0	0	0.0028	-0.0104	0.004
4	SLE QP 1	0	0	0	0.0025	-0.0006	0.0037
4	SLO 1	0	0	0	-0.0938	-0.0552	-0.2213
4	SLO 2	0	0	0	-0.0938	-0.0552	-0.2213
4	SLO 3	0	0	0	0.0987	-0.0552	0.2283
4	SLO 4	0	0	0	0.0987	-0.0552	0.2283
4	SLO 5	0	0	0	-0.3182	-0.017	-0.7457
4	SLO 6	0	0	0	-0.3182	-0.017	-0.7457
4	SLO 7	0	0	0	0.3233	-0.017	0.7529
4	SLO 8	0	0	0	0.3233	-0.017	0.7529

Nodo	Cont.	Spostamento			Rotazione		
Ind.	N.br.	ux	uy	uz	rx	ry	rz
4	SLO 9	0	0	0	-0.3182	0.0157	-0.7456
4	SLO 10	0	0	0	-0.3182	0.0157	-0.7456
4	SLO 11	0	0	0	0.3233	0.0157	0.753
4	SLO 12	0	0	0	0.3233	0.0157	0.753
4	SLO 13	0	0	0	-0.0936	0.0539	-0.221
4	SLO 14	0	0	0	-0.0936	0.0539	-0.221
4	SLO 15	0	0	0	0.0988	0.0539	0.2286
4	SLO 16	0	0	0	0.0988	0.0539	0.2286
4	SLD 1	0	0	0	-0.0864	-0.0454	-0.2042
4	SLD 2	0	0	0	-0.0864	-0.0454	-0.2042
4	SLD 3	0	0	0	0.0914	-0.0454	0.2113
4	SLD 4	0	0	0	0.0914	-0.0454	0.2113
4	SLD 5	0	0	0	-0.2939	-0.0141	-0.6887
4	SLD 6	0	0	0	-0.2939	-0.0141	-0.6887
4	SLD 7	0	0	0	0.2989	-0.0141	0.696
4	SLD 8	0	0	0	0.2989	-0.0141	0.696
4	SLD 9	0	0	0	-0.2938	0.0128	-0.6887
4	SLD 10	0	0	0	-0.2938	0.0128	-0.6887
4	SLD 11	0	0	0	0.2989	0.0128	0.696
4	SLD 12	0	0	0	0.2989	0.0128	0.696
4	SLD 13	0	0	0	-0.0863	0.0441	-0.204
4	SLD 14	0	0	0	-0.0863	0.0441	-0.204
4	SLD 15	0	0	0	0.0915	0.0441	0.2115
4	SLD 16	0	0	0	0.0915	0.0441	0.2115
4	SLV 1	0	0	0	-0.2321	-0.1006	-0.5444
4	SLV 2	0	0	0	-0.2321	-0.1006	-0.5444
4	SLV 3	0	0	0	0.2369	-0.1006	0.5513
4	SLV 4	0	0	0	0.2369	-0.1006	0.5513
4	SLV 5	0	0	0	-0.7792	-0.0306	-1.8225
4	SLV 6	0	0	0	-0.7792	-0.0306	-1.8225
4	SLV 7	0	0	0	0.7842	-0.0306	1.8297
4	SLV 8	0	0	0	0.7842	-0.0306	1.8297
4	SLV 9	0	0	0	-0.7791	0.0294	-1.8224
4	SLV 10	0	0	0	-0.7791	0.0294	-1.8224
4	SLV 11	0	0	0	0.7842	0.0294	1.8298
4	SLV 12	0	0	0	0.7842	0.0294	1.8298
4	SLV 13	0	0	0	-0.2319	0.0993	-0.5439
4	SLV 14	0	0	0	-0.2319	0.0993	-0.5439
4	SLV 15	0	0	0	0.2371	0.0993	0.5517
4	SLV 16	0	0	0	0.2371	0.0993	0.5517
5	SLU 1	0	0	0	0.0025	0.0006	-0.0037
5	SLU 2	0	0	0	0.0025	0.0006	-0.0037
5	SLU 3	0	0	0	0.0025	0.0006	-0.0037
5	SLU 4	0	0	0	0.0025	0.0006	-0.0037
5	SLU 5	0	0	0	0.0025	0.0006	-0.0037
5	SLU 6	0	0	0	0.0026	0.0025	-0.0038
5	SLU 7	0	0	0	0.0026	0.0025	-0.0038
5	SLU 8	0	0	0	0.0026	0.0025	-0.0038
5	SLU 9	0	0	0	0.0026	0.0025	-0.0038
5	SLU 10	0	0	0	0.0027	0.0043	-0.0038
5	SLU 11	0	0	0	0.0027	0.0043	-0.0038
5	SLU 12	0	0	0	0.0027	0.0043	-0.0038
5	SLU 13	0	0	0	0.0027	0.0043	-0.0039
5	SLU 14	0	0	0	0.003	0.0155	-0.0042
5	SLU 15	0	0	0	0.003	0.0155	-0.0042
5	SLU 16	0	0	0	0.003	0.0155	-0.0042
5	SLU 17	0	0	0	0.003	0.0155	-0.0042
5	SLU 18	0	0	0	0.003	0.0173	-0.0043
5	SLU 19	0	0	0	0.003	0.0173	-0.0043
5	SLU 20	0	0	0	0.003	0.0173	-0.0043
5	SLU 21	0	0	0	0.003	0.0173	-0.0043
5	SLU 22	0	0	0	0.0031	0.0192	-0.0044
5	SLU 23	0	0	0	0.0031	0.0192	-0.0044
5	SLU 24	0	0	0	0.0031	0.0192	-0.0044
5	SLU 25	0	0	0	0.0031	0.0192	-0.0044
5	SLU 26	0	0	0	0.0036	0.0377	-0.005
5	SLU 27	0	0	0	0.0036	0.0377	-0.005
5	SLU 28	0	0	0	0.0036	0.0377	-0.005
5	SLU 29	0	0	0	0.0036	0.0377	-0.005
5	SLU 30	0	0	0	0.0037	0.0396	-0.0051
5	SLU 31	0	0	0	0.0037	0.0396	-0.0051
5	SLU 32	0	0	0	0.0037	0.0396	-0.0051
5	SLU 33	0	0	0	0.0037	0.0396	-0.0051
5	SLU 34	0	0	0	0.0025	0.0006	-0.0037
5	SLU 35	0	0	0	0.0025	0.0006	-0.0037
5	SLU 36	0	0	0	0.0025	0.0006	-0.0037
5	SLU 37	0	0	0	0.0025	0.0006	-0.0037
5	SLU 38	0	0	0	0.0025	0.0006	-0.0037
5	SLU 39	0	0	0	0.0026	0.0025	-0.0038
5	SLU 40	0	0	0	0.0026	0.0025	-0.0038
5	SLU 41	0	0	0	0.0026	0.0025	-0.0038
5	SLU 42	0	0	0	0.0026	0.0025	-0.0038
5	SLU 43	0	0	0	0.0027	0.0043	-0.0038
5	SLU 44	0	0	0	0.0027	0.0043	-0.0038
5	SLU 45	0	0	0	0.0027	0.0043	-0.0038
5	SLU 46	0	0	0	0.0027	0.0043	-0.0039
5	SLU 47	0	0	0	0.003	0.0155	-0.0042
5	SLU 48	0	0	0	0.003	0.0155	-0.0042
5	SLU 49	0	0	0	0.003	0.0155	-0.0042
5	SLU 50	0	0	0	0.003	0.0155	-0.0042
5	SLU 51	0	0	0	0.003	0.0173	-0.0043
5	SLU 52	0	0	0	0.003	0.0173	-0.0043
5	SLU 53	0	0	0	0.003	0.0173	-0.0043
5	SLU 54	0	0	0	0.003	0.0173	-0.0043
5	SLU 55	0	0	0	0.0031	0.0192	-0.0044

Nodo	Cont.	Spostamento			Rotazione		
Ind.	N.br.	ux	uy	uz	rx	ry	rz
5	SLU 56	0	0	0	0.0031	0.0192	-0.0044
5	SLU 57	0	0	0	0.0031	0.0192	-0.0044
5	SLU 58	0	0	0	0.0031	0.0192	-0.0044
5	SLU 59	0	0	0	0.0036	0.0377	-0.005
5	SLU 60	0	0	0	0.0036	0.0377	-0.005
5	SLU 61	0	0	0	0.0036	0.0377	-0.005
5	SLU 62	0	0	0	0.0036	0.0377	-0.005
5	SLU 63	0	0	0	0.0037	0.0396	-0.0051
5	SLU 64	0	0	0	0.0037	0.0396	-0.0051
5	SLU 65	0	0	0	0.0037	0.0396	-0.0051
5	SLU 66	0	0	0	0.0037	0.0396	-0.0051
5	SLU 67	0	0	0	0.0033	0.0008	-0.0047
5	SLU 68	0	0	0	0.0033	0.0008	-0.0048
5	SLU 69	0	0	0	0.0033	0.0008	-0.0048
5	SLU 70	0	0	0	0.0033	0.0008	-0.0048
5	SLU 71	0	0	0	0.0033	0.0008	-0.0048
5	SLU 72	0	0	0	0.0034	0.0027	-0.0048
5	SLU 73	0	0	0	0.0034	0.0027	-0.0049
5	SLU 74	0	0	0	0.0034	0.0027	-0.0049
5	SLU 75	0	0	0	0.0034	0.0027	-0.0049
5	SLU 76	0	0	0	0.0034	0.0045	-0.0049
5	SLU 77	0	0	0	0.0034	0.0045	-0.0049
5	SLU 78	0	0	0	0.0034	0.0045	-0.0049
5	SLU 79	0	0	0	0.0034	0.0045	-0.0049
5	SLU 80	0	0	0	0.0037	0.0157	-0.0053
5	SLU 81	0	0	0	0.0037	0.0157	-0.0053
5	SLU 82	0	0	0	0.0037	0.0157	-0.0053
5	SLU 83	0	0	0	0.0037	0.0157	-0.0053
5	SLU 84	0	0	0	0.0038	0.0175	-0.0054
5	SLU 85	0	0	0	0.0038	0.0175	-0.0054
5	SLU 86	0	0	0	0.0038	0.0175	-0.0054
5	SLU 87	0	0	0	0.0038	0.0175	-0.0054
5	SLU 88	0	0	0	0.0039	0.0194	-0.0055
5	SLU 89	0	0	0	0.0039	0.0194	-0.0055
5	SLU 90	0	0	0	0.0039	0.0194	-0.0055
5	SLU 91	0	0	0	0.0039	0.0194	-0.0055
5	SLU 92	0	0	0	0.0044	0.0379	-0.0061
5	SLU 93	0	0	0	0.0044	0.0379	-0.0061
5	SLU 94	0	0	0	0.0044	0.0379	-0.0061
5	SLU 95	0	0	0	0.0044	0.0379	-0.0061
5	SLU 96	0	0	0	0.0044	0.0398	-0.0062
5	SLU 97	0	0	0	0.0044	0.0398	-0.0062
5	SLU 98	0	0	0	0.0044	0.0398	-0.0062
5	SLU 99	0	0	0	0.0044	0.0398	-0.0062
5	SLU 100	0	0	0	0.0033	0.0008	-0.0047
5	SLU 101	0	0	0	0.0033	0.0008	-0.0048
5	SLU 102	0	0	0	0.0033	0.0008	-0.0048
5	SLU 103	0	0	0	0.0033	0.0008	-0.0048
5	SLU 104	0	0	0	0.0033	0.0008	-0.0048
5	SLU 105	0	0	0	0.0034	0.0027	-0.0048
5	SLU 106	0	0	0	0.0034	0.0027	-0.0049
5	SLU 107	0	0	0	0.0034	0.0027	-0.0049
5	SLU 108	0	0	0	0.0034	0.0027	-0.0049
5	SLU 109	0	0	0	0.0034	0.0045	-0.0049
5	SLU 110	0	0	0	0.0034	0.0045	-0.0049
5	SLU 111	0	0	0	0.0034	0.0045	-0.0049
5	SLU 112	0	0	0	0.0034	0.0045	-0.0049
5	SLU 113	0	0	0	0.0037	0.0157	-0.0053
5	SLU 114	0	0	0	0.0037	0.0157	-0.0053
5	SLU 115	0	0	0	0.0037	0.0157	-0.0053
5	SLU 116	0	0	0	0.0037	0.0157	-0.0053
5	SLU 117	0	0	0	0.0038	0.0175	-0.0054
5	SLU 118	0	0	0	0.0038	0.0175	-0.0054
5	SLU 119	0	0	0	0.0038	0.0175	-0.0054
5	SLU 120	0	0	0	0.0038	0.0175	-0.0054
5	SLU 121	0	0	0	0.0039	0.0194	-0.0055
5	SLU 122	0	0	0	0.0039	0.0194	-0.0055
5	SLU 123	0	0	0	0.0039	0.0194	-0.0055
5	SLU 124	0	0	0	0.0039	0.0194	-0.0055
5	SLU 125	0	0	0	0.0044	0.0379	-0.0061
5	SLU 126	0	0	0	0.0044	0.0379	-0.0061
5	SLU 127	0	0	0	0.0044	0.0379	-0.0061
5	SLU 128	0	0	0	0.0044	0.0379	-0.0061
5	SLU 129	0	0	0	0.0044	0.0398	-0.0062
5	SLU 130	0	0	0	0.0044	0.0398	-0.0062
5	SLU 131	0	0	0	0.0044	0.0398	-0.0062
5	SLU 132	0	0	0	0.0044	0.0398	-0.0062
5	SLE RA 1	0	0	0	0.0025	0.0006	-0.0037
5	SLE RA 2	0	0	0	0.0025	0.0006	-0.0037
5	SLE RA 3	0	0	0	0.0025	0.0006	-0.0037
5	SLE RA 4	0	0	0	0.0025	0.0006	-0.0037
5	SLE RA 5	0	0	0	0.0025	0.0006	-0.0037
5	SLE RA 6	0	0	0	0.0026	0.0019	-0.0037
5	SLE RA 7	0	0	0	0.0026	0.0019	-0.0037
5	SLE RA 8	0	0	0	0.0026	0.0019	-0.0037
5	SLE RA 9	0	0	0	0.0026	0.0019	-0.0037
5	SLE RA 10	0	0	0	0.0026	0.0031	-0.0038
5	SLE RA 11	0	0	0	0.0026	0.0031	-0.0038
5	SLE RA 12	0	0	0	0.0026	0.0031	-0.0038
5	SLE RA 13	0	0	0	0.0026	0.0031	-0.0038
5	SLE RA 14	0	0	0	0.0028	0.0105	-0.004
5	SLE RA 15	0	0	0	0.0028	0.0105	-0.004
5	SLE RA 16	0	0	0	0.0028	0.0105	-0.004
5	SLE RA 17	0	0	0	0.0028	0.0105	-0.004
5	SLE RA 18	0	0	0	0.0029	0.0118	-0.0041

Nodo	Cont.	Spostamento			Rotazione		
Ind.	N.br.	ux	uy	uz	rx	ry	rz
5	SLE RA 19	0	0	0	0.0029	0.0118	-0.0041
5	SLE RA 20	0	0	0	0.0029	0.0118	-0.0041
5	SLE RA 21	0	0	0	0.0029	0.0118	-0.0041
5	SLE RA 22	0	0	0	0.0029	0.013	-0.0041
5	SLE RA 23	0	0	0	0.0029	0.013	-0.0041
5	SLE RA 24	0	0	0	0.0029	0.013	-0.0041
5	SLE RA 25	0	0	0	0.0029	0.013	-0.0041
5	SLE RA 26	0	0	0	0.0032	0.0254	-0.0046
5	SLE RA 27	0	0	0	0.0032	0.0254	-0.0046
5	SLE RA 28	0	0	0	0.0033	0.0254	-0.0046
5	SLE RA 29	0	0	0	0.0033	0.0254	-0.0046
5	SLE RA 30	0	0	0	0.0033	0.0266	-0.0046
5	SLE RA 31	0	0	0	0.0033	0.0266	-0.0046
5	SLE RA 32	0	0	0	0.0033	0.0266	-0.0046
5	SLE RA 33	0	0	0	0.0033	0.0266	-0.0046
5	SLE FR 1	0	0	0	0.0025	0.0006	-0.0037
5	SLE FR 2	0	0	0	0.0025	0.0006	-0.0037
5	SLE FR 3	0	0	0	0.0025	0.0006	-0.0037
5	SLE FR 4	0	0	0	0.0025	0.0011	-0.0037
5	SLE FR 5	0	0	0	0.0028	0.0105	-0.004
5	SLE QP 1	0	0	0	0.0025	0.0006	-0.0037
5	SLO 1	0	0	0	-0.0936	-0.0539	0.221
5	SLO 2	0	0	0	-0.0936	-0.0539	0.221
5	SLO 3	0	0	0	0.0988	-0.0539	-0.2286
5	SLO 4	0	0	0	0.0988	-0.0539	-0.2286
5	SLO 5	0	0	0	-0.3182	-0.0157	0.7456
5	SLO 6	0	0	0	-0.3182	-0.0157	0.7456
5	SLO 7	0	0	0	0.3233	-0.0157	-0.753
5	SLO 8	0	0	0	0.3233	-0.0157	-0.753
5	SLO 9	0	0	0	-0.3182	0.017	0.7457
5	SLO 10	0	0	0	-0.3182	0.017	0.7457
5	SLO 11	0	0	0	0.3233	0.017	-0.7529
5	SLO 12	0	0	0	0.3233	0.017	-0.7529
5	SLO 13	0	0	0	-0.0938	0.0552	0.2213
5	SLO 14	0	0	0	-0.0938	0.0552	0.2213
5	SLO 15	0	0	0	0.0987	0.0552	-0.2283
5	SLO 16	0	0	0	0.0987	0.0552	-0.2283
5	SLD 1	0	0	0	-0.0863	-0.0441	0.204
5	SLD 2	0	0	0	-0.0863	-0.0441	0.204
5	SLD 3	0	0	0	0.0915	-0.0441	-0.2115
5	SLD 4	0	0	0	0.0915	-0.0441	-0.2115
5	SLD 5	0	0	0	-0.2938	-0.0128	0.6887
5	SLD 6	0	0	0	-0.2938	-0.0128	0.6887
5	SLD 7	0	0	0	0.2989	-0.0128	-0.696
5	SLD 8	0	0	0	0.2989	-0.0128	-0.696
5	SLD 9	0	0	0	-0.2939	0.0141	0.6887
5	SLD 10	0	0	0	-0.2939	0.0141	0.6887
5	SLD 11	0	0	0	0.2989	0.0141	-0.696
5	SLD 12	0	0	0	0.2989	0.0141	-0.696
5	SLD 13	0	0	0	-0.0864	0.0454	0.2042
5	SLD 14	0	0	0	-0.0864	0.0454	0.2042
5	SLD 15	0	0	0	0.0914	0.0454	-0.2113
5	SLD 16	0	0	0	0.0914	0.0454	-0.2113
5	SLV 1	0	0	0	-0.2319	-0.0993	0.5439
5	SLV 2	0	0	0	-0.2319	-0.0993	0.5439
5	SLV 3	0	0	0	0.2371	-0.0993	-0.5517
5	SLV 4	0	0	0	0.2371	-0.0993	-0.5517
5	SLV 5	0	0	0	-0.7791	-0.0294	1.8224
5	SLV 6	0	0	0	-0.7791	-0.0294	1.8224
5	SLV 7	0	0	0	0.7842	-0.0294	-1.8298
5	SLV 8	0	0	0	0.7842	-0.0294	-1.8298
5	SLV 9	0	0	0	-0.7792	0.0306	1.8225
5	SLV 10	0	0	0	-0.7792	0.0306	1.8225
5	SLV 11	0	0	0	0.7842	0.0306	-1.8297
5	SLV 12	0	0	0	0.7842	0.0306	-1.8297
5	SLV 13	0	0	0	-0.2321	0.1006	0.5444
5	SLV 14	0	0	0	-0.2321	0.1006	0.5444
5	SLV 15	0	0	0	0.2369	0.1006	-0.5513
5	SLV 16	0	0	0	0.2369	0.1006	-0.5513
6	SLU 1	0	0	0	0.0017	-0.0006	0.0032
6	SLU 2	0	0	0	0.0021	-0.0006	0.0042
6	SLU 3	0	0	0	0.0021	-0.0006	0.0042
6	SLU 4	0	0	0	0.0017	-0.0006	0.0032
6	SLU 5	0	0	0	0.002	-0.0006	0.004
6	SLU 6	0	0	0	0.0022	-0.0019	0.0044
6	SLU 7	0	0	0	0.0022	-0.0019	0.0044
6	SLU 8	0	0	0	0.0018	-0.0019	0.0034
6	SLU 9	0	0	0	0.0021	-0.0019	0.0042
6	SLU 10	0	0	0	0.0019	-0.0032	0.0037
6	SLU 11	0	0	0	0.0022	-0.0032	0.0044
6	SLU 12	0	0	0	0.0019	-0.0032	0.0037
6	SLU 13	0	0	0	0.0022	-0.0032	0.0044
6	SLU 14	0	0	0	0.0029	-0.0087	0.0059
6	SLU 15	0	0	0	0.0029	-0.0087	0.0059
6	SLU 16	0	0	0	0.0025	-0.0087	0.0049
6	SLU 17	0	0	0	0.0028	-0.0087	0.0056
6	SLU 18	0	0	0	0.003	-0.01	0.0061
6	SLU 19	0	0	0	0.003	-0.01	0.0061
6	SLU 20	0	0	0	0.0026	-0.01	0.0051
6	SLU 21	0	0	0	0.0029	-0.01	0.0059
6	SLU 22	0	0	0	0.0027	-0.0112	0.0053
6	SLU 23	0	0	0	0.003	-0.0112	0.0061
6	SLU 24	0	0	0	0.0027	-0.0112	0.0053
6	SLU 25	0	0	0	0.003	-0.0112	0.0061
6	SLU 26	0	0	0	0.0036	-0.0207	0.0073

Nodo	Cont.	Spostamento			Rotazione		
Ind.	N.br.	ux	uy	uz	rx	ry	rz
6	SLU 27	0	0	0	0.004	-0.0207	0.0081
6	SLU 28	0	0	0	0.0036	-0.0207	0.0074
6	SLU 29	0	0	0	0.004	-0.0207	0.0081
6	SLU 30	0	0	0	0.0038	-0.022	0.0076
6	SLU 31	0	0	0	0.0041	-0.022	0.0084
6	SLU 32	0	0	0	0.0038	-0.022	0.0076
6	SLU 33	0	0	0	0.0041	-0.022	0.0084
6	SLU 34	0	0	0	0.0017	-0.0006	0.0032
6	SLU 35	0	0	0	0.0021	-0.0006	0.0042
6	SLU 36	0	0	0	0.0021	-0.0006	0.0042
6	SLU 37	0	0	0	0.0017	-0.0006	0.0032
6	SLU 38	0	0	0	0.002	-0.0006	0.004
6	SLU 39	0	0	0	0.0022	-0.0019	0.0044
6	SLU 40	0	0	0	0.0022	-0.0019	0.0044
6	SLU 41	0	0	0	0.0018	-0.0019	0.0034
6	SLU 42	0	0	0	0.0021	-0.0019	0.0042
6	SLU 43	0	0	0	0.0019	-0.0032	0.0037
6	SLU 44	0	0	0	0.0022	-0.0032	0.0044
6	SLU 45	0	0	0	0.0019	-0.0032	0.0037
6	SLU 46	0	0	0	0.0022	-0.0032	0.0044
6	SLU 47	0	0	0	0.0029	-0.0087	0.0059
6	SLU 48	0	0	0	0.0029	-0.0087	0.0059
6	SLU 49	0	0	0	0.0025	-0.0087	0.0049
6	SLU 50	0	0	0	0.0028	-0.0087	0.0056
6	SLU 51	0	0	0	0.003	-0.01	0.0061
6	SLU 52	0	0	0	0.003	-0.01	0.0061
6	SLU 53	0	0	0	0.0026	-0.01	0.0051
6	SLU 54	0	0	0	0.0029	-0.01	0.0059
6	SLU 55	0	0	0	0.0027	-0.0112	0.0053
6	SLU 56	0	0	0	0.003	-0.0112	0.0061
6	SLU 57	0	0	0	0.0027	-0.0112	0.0053
6	SLU 58	0	0	0	0.003	-0.0112	0.0061
6	SLU 59	0	0	0	0.0036	-0.0207	0.0073
6	SLU 60	0	0	0	0.004	-0.0207	0.0081
6	SLU 61	0	0	0	0.0036	-0.0207	0.0074
6	SLU 62	0	0	0	0.004	-0.0207	0.0081
6	SLU 63	0	0	0	0.0038	-0.022	0.0076
6	SLU 64	0	0	0	0.0041	-0.022	0.0084
6	SLU 65	0	0	0	0.0038	-0.022	0.0076
6	SLU 66	0	0	0	0.0041	-0.022	0.0084
6	SLU 67	0	0	0	0.0022	-0.0008	0.0041
6	SLU 68	0	0	0	0.0026	-0.0008	0.0051
6	SLU 69	0	0	0	0.0026	-0.0008	0.0052
6	SLU 70	0	0	0	0.0022	-0.0008	0.0042
6	SLU 71	0	0	0	0.0025	-0.0008	0.0049
6	SLU 72	0	0	0	0.0027	-0.0021	0.0054
6	SLU 73	0	0	0	0.0027	-0.0021	0.0054
6	SLU 74	0	0	0	0.0023	-0.0021	0.0044
6	SLU 75	0	0	0	0.0026	-0.0021	0.0052
6	SLU 76	0	0	0	0.0024	-0.0034	0.0046
6	SLU 77	0	0	0	0.0027	-0.0034	0.0054
6	SLU 78	0	0	0	0.0024	-0.0034	0.0046
6	SLU 79	0	0	0	0.0028	-0.0034	0.0054
6	SLU 80	0	0	0	0.0034	-0.0088	0.0068
6	SLU 81	0	0	0	0.0034	-0.0088	0.0068
6	SLU 82	0	0	0	0.003	-0.0088	0.0058
6	SLU 83	0	0	0	0.0033	-0.0088	0.0066
6	SLU 84	0	0	0	0.0035	-0.0101	0.0071
6	SLU 85	0	0	0	0.0035	-0.0101	0.0071
6	SLU 86	0	0	0	0.0031	-0.0101	0.0061
6	SLU 87	0	0	0	0.0034	-0.0101	0.0068
6	SLU 88	0	0	0	0.0032	-0.0114	0.0063
6	SLU 89	0	0	0	0.0035	-0.0114	0.007
6	SLU 90	0	0	0	0.0032	-0.0114	0.0063
6	SLU 91	0	0	0	0.0035	-0.0114	0.0071
6	SLU 92	0	0	0	0.0041	-0.0209	0.0083
6	SLU 93	0	0	0	0.0045	-0.0209	0.0091
6	SLU 94	0	0	0	0.0042	-0.0209	0.0083
6	SLU 95	0	0	0	0.0045	-0.0209	0.0091
6	SLU 96	0	0	0	0.0043	-0.0222	0.0085
6	SLU 97	0	0	0	0.0046	-0.0222	0.0093
6	SLU 98	0	0	0	0.0043	-0.0222	0.0085
6	SLU 99	0	0	0	0.0046	-0.0222	0.0093
6	SLU 100	0	0	0	0.0022	-0.0008	0.0041
6	SLU 101	0	0	0	0.0026	-0.0008	0.0051
6	SLU 102	0	0	0	0.0026	-0.0008	0.0052
6	SLU 103	0	0	0	0.0022	-0.0008	0.0042
6	SLU 104	0	0	0	0.0025	-0.0008	0.0049
6	SLU 105	0	0	0	0.0027	-0.0021	0.0054
6	SLU 106	0	0	0	0.0027	-0.0021	0.0054
6	SLU 107	0	0	0	0.0023	-0.0021	0.0044
6	SLU 108	0	0	0	0.0026	-0.0021	0.0052
6	SLU 109	0	0	0	0.0024	-0.0034	0.0046
6	SLU 110	0	0	0	0.0027	-0.0034	0.0054
6	SLU 111	0	0	0	0.0024	-0.0034	0.0046
6	SLU 112	0	0	0	0.0028	-0.0034	0.0054
6	SLU 113	0	0	0	0.0034	-0.0088	0.0068
6	SLU 114	0	0	0	0.0034	-0.0088	0.0068
6	SLU 115	0	0	0	0.003	-0.0088	0.0058
6	SLU 116	0	0	0	0.0033	-0.0088	0.0066
6	SLU 117	0	0	0	0.0035	-0.0101	0.0071
6	SLU 118	0	0	0	0.0035	-0.0101	0.0071
6	SLU 119	0	0	0	0.0031	-0.0101	0.0061
6	SLU 120	0	0	0	0.0034	-0.0101	0.0068
6	SLU 121	0	0	0	0.0032	-0.0114	0.0063

Nodo	Cont.	Spostamento			Rotazione		
Ind.	N.br.	ux	uy	uz	rx	ry	rz
6	SLU 122	0	0	0	0.0035	-0.0114	0.007
6	SLU 123	0	0	0	0.0032	-0.0114	0.0063
6	SLU 124	0	0	0	0.0035	-0.0114	0.0071
6	SLU 125	0	0	0	0.0041	-0.0209	0.0083
6	SLU 126	0	0	0	0.0045	-0.0209	0.0091
6	SLU 127	0	0	0	0.0042	-0.0209	0.0083
6	SLU 128	0	0	0	0.0045	-0.0209	0.0091
6	SLU 129	0	0	0	0.0043	-0.0222	0.0085
6	SLU 130	0	0	0	0.0046	-0.0222	0.0093
6	SLU 131	0	0	0	0.0043	-0.0222	0.0085
6	SLU 132	0	0	0	0.0046	-0.0222	0.0093
6	SLE RA 1	0	0	0	0.0017	-0.0006	0.0032
6	SLE RA 2	0	0	0	0.002	-0.0006	0.0039
6	SLE RA 3	0	0	0	0.002	-0.0006	0.0039
6	SLE RA 4	0	0	0	0.0017	-0.0006	0.0032
6	SLE RA 5	0	0	0	0.0019	-0.0006	0.0037
6	SLE RA 6	0	0	0	0.0021	-0.0015	0.004
6	SLE RA 7	0	0	0	0.0021	-0.0015	0.004
6	SLE RA 8	0	0	0	0.0018	-0.0015	0.0034
6	SLE RA 9	0	0	0	0.002	-0.0015	0.0039
6	SLE RA 10	0	0	0	0.0018	-0.0024	0.0035
6	SLE RA 11	0	0	0	0.0021	-0.0023	0.004
6	SLE RA 12	0	0	0	0.0018	-0.0024	0.0035
6	SLE RA 13	0	0	0	0.0021	-0.0023	0.004
6	SLE RA 14	0	0	0	0.0025	-0.006	0.005
6	SLE RA 15	0	0	0	0.0025	-0.006	0.005
6	SLE RA 16	0	0	0	0.0022	-0.006	0.0043
6	SLE RA 17	0	0	0	0.0024	-0.006	0.0048
6	SLE RA 18	0	0	0	0.0026	-0.0068	0.0051
6	SLE RA 19	0	0	0	0.0026	-0.0068	0.0051
6	SLE RA 20	0	0	0	0.0023	-0.0068	0.0045
6	SLE RA 21	0	0	0	0.0025	-0.0068	0.005
6	SLE RA 22	0	0	0	0.0024	-0.0077	0.0046
6	SLE RA 23	0	0	0	0.0026	-0.0077	0.0051
6	SLE RA 24	0	0	0	0.0024	-0.0077	0.0046
6	SLE RA 25	0	0	0	0.0026	-0.0077	0.0051
6	SLE RA 26	0	0	0	0.003	-0.014	0.006
6	SLE RA 27	0	0	0	0.0032	-0.014	0.0065
6	SLE RA 28	0	0	0	0.003	-0.014	0.006
6	SLE RA 29	0	0	0	0.0032	-0.014	0.0065
6	SLE RA 30	0	0	0	0.0031	-0.0149	0.0061
6	SLE RA 31	0	0	0	0.0033	-0.0149	0.0066
6	SLE RA 32	0	0	0	0.0031	-0.0149	0.0061
6	SLE RA 33	0	0	0	0.0033	-0.0149	0.0066
6	SLE FR 1	0	0	0	0.0017	-0.0006	0.0032
6	SLE FR 2	0	0	0	0.0019	-0.0006	0.0037
6	SLE FR 3	0	0	0	0.0017	-0.0006	0.0032
6	SLE FR 4	0	0	0	0.0017	-0.001	0.0032
6	SLE FR 5	0	0	0	0.0022	-0.006	0.0043
6	SLE QP 1	0	0	0	0.0017	-0.0006	0.0032
6	SLO 1	0	0	0	-0.0919	-0.0551	-0.2154
6	SLO 2	0	0	0	-0.0919	-0.0551	-0.2154
6	SLO 3	0	0	0	0.1005	-0.0551	0.2341
6	SLO 4	0	0	0	0.1005	-0.0551	0.2341
6	SLO 5	0	0	0	-0.3182	-0.017	-0.7442
6	SLO 6	0	0	0	-0.3182	-0.017	-0.7442
6	SLO 7	0	0	0	0.3232	-0.017	0.7543
6	SLO 8	0	0	0	0.3232	-0.017	0.7543
6	SLO 9	0	0	0	-0.3198	0.0157	-0.7479
6	SLO 10	0	0	0	-0.3198	0.0157	-0.7479
6	SLO 11	0	0	0	0.3216	0.0157	0.7505
6	SLO 12	0	0	0	0.3216	0.0157	0.7505
6	SLO 13	0	0	0	-0.0972	0.0538	-0.2278
6	SLO 14	0	0	0	-0.0972	0.0538	-0.2278
6	SLO 15	0	0	0	0.0953	0.0538	0.2217
6	SLO 16	0	0	0	0.0953	0.0538	0.2217
6	SLD 1	0	0	0	-0.0851	-0.0453	-0.1994
6	SLD 2	0	0	0	-0.0851	-0.0453	-0.1994
6	SLD 3	0	0	0	0.0927	-0.0453	0.2159
6	SLD 4	0	0	0	0.0927	-0.0453	0.2159
6	SLD 5	0	0	0	-0.294	-0.014	-0.6876
6	SLD 6	0	0	0	-0.294	-0.014	-0.6876
6	SLD 7	0	0	0	0.2987	-0.014	0.697
6	SLD 8	0	0	0	0.2987	-0.014	0.697
6	SLD 9	0	0	0	-0.2953	0.0128	-0.6906
6	SLD 10	0	0	0	-0.2953	0.0128	-0.6906
6	SLD 11	0	0	0	0.2974	0.0128	0.6939
6	SLD 12	0	0	0	0.2974	0.0128	0.6939
6	SLD 13	0	0	0	-0.0894	0.0441	-0.2096
6	SLD 14	0	0	0	-0.0894	0.0441	-0.2096
6	SLD 15	0	0	0	0.0884	0.0441	0.2058
6	SLD 16	0	0	0	0.0884	0.0441	0.2058
6	SLV 1	0	0	0	-0.228	-0.1005	-0.5333
6	SLV 2	0	0	0	-0.228	-0.1005	-0.5333
6	SLV 3	0	0	0	0.241	-0.1005	0.5623
6	SLV 4	0	0	0	0.241	-0.1005	0.5623
6	SLV 5	0	0	0	-0.7785	-0.0306	-1.8193
6	SLV 6	0	0	0	-0.7785	-0.0306	-1.8193
6	SLV 7	0	0	0	0.7847	-0.0306	1.8325
6	SLV 8	0	0	0	0.7847	-0.0306	1.8325
6	SLV 9	0	0	0	-0.7813	0.0293	-1.8261
6	SLV 10	0	0	0	-0.7813	0.0293	-1.8261
6	SLV 11	0	0	0	0.7818	0.0293	1.8257
6	SLV 12	0	0	0	0.7818	0.0293	1.8257
6	SLV 13	0	0	0	-0.2376	0.0992	-0.5559

Nodo	Cont.	Spostamento			Rotazione		
Ind.	N.br.	ux	uy	uz	rx	ry	rz
6	SLV 14	0	0	0	-0.2376	0.0992	-0.5559
6	SLV 15	0	0	0	0.2313	0.0992	0.5396
6	SLV 16	0	0	0	0.2313	0.0992	0.5396
7	SLU 1	0	0	0	0.0017	0.0006	-0.0032
7	SLU 2	0	0	0	0.0021	0.0006	-0.0042
7	SLU 3	0	0	0	0.0021	0.0006	-0.0042
7	SLU 4	0	0	0	0.0017	0.0006	-0.0032
7	SLU 5	0	0	0	0.002	0.0006	-0.004
7	SLU 6	0	0	0	0.0022	0.002	-0.0044
7	SLU 7	0	0	0	0.0022	0.002	-0.0045
7	SLU 8	0	0	0	0.0018	0.002	-0.0035
7	SLU 9	0	0	0	0.0021	0.002	-0.0042
7	SLU 10	0	0	0	0.0019	0.0034	-0.0037
7	SLU 11	0	0	0	0.0022	0.0034	-0.0044
7	SLU 12	0	0	0	0.0019	0.0034	-0.0037
7	SLU 13	0	0	0	0.0023	0.0034	-0.0045
7	SLU 14	0	0	0	0.0029	0.0088	-0.0059
7	SLU 15	0	0	0	0.0029	0.0088	-0.0059
7	SLU 16	0	0	0	0.0025	0.0088	-0.0049
7	SLU 17	0	0	0	0.0028	0.0088	-0.0056
7	SLU 18	0	0	0	0.003	0.0102	-0.0061
7	SLU 19	0	0	0	0.003	0.0102	-0.0061
7	SLU 20	0	0	0	0.0026	0.0102	-0.0051
7	SLU 21	0	0	0	0.0029	0.0102	-0.0059
7	SLU 22	0	0	0	0.0027	0.0115	-0.0054
7	SLU 23	0	0	0	0.003	0.0115	-0.0061
7	SLU 24	0	0	0	0.0027	0.0115	-0.0054
7	SLU 25	0	0	0	0.003	0.0115	-0.0061
7	SLU 26	0	0	0	0.0037	0.021	-0.0074
7	SLU 27	0	0	0	0.004	0.021	-0.0081
7	SLU 28	0	0	0	0.0037	0.021	-0.0074
7	SLU 29	0	0	0	0.004	0.021	-0.0082
7	SLU 30	0	0	0	0.0038	0.0224	-0.0076
7	SLU 31	0	0	0	0.0041	0.0224	-0.0084
7	SLU 32	0	0	0	0.0038	0.0224	-0.0076
7	SLU 33	0	0	0	0.0041	0.0224	-0.0084
7	SLU 34	0	0	0	0.0017	0.0006	-0.0032
7	SLU 35	0	0	0	0.0021	0.0006	-0.0042
7	SLU 36	0	0	0	0.0021	0.0006	-0.0042
7	SLU 37	0	0	0	0.0017	0.0006	-0.0032
7	SLU 38	0	0	0	0.002	0.0006	-0.004
7	SLU 39	0	0	0	0.0022	0.002	-0.0044
7	SLU 40	0	0	0	0.0022	0.002	-0.0045
7	SLU 41	0	0	0	0.0018	0.002	-0.0035
7	SLU 42	0	0	0	0.0021	0.002	-0.0042
7	SLU 43	0	0	0	0.0019	0.0034	-0.0037
7	SLU 44	0	0	0	0.0022	0.0034	-0.0044
7	SLU 45	0	0	0	0.0019	0.0034	-0.0037
7	SLU 46	0	0	0	0.0023	0.0034	-0.0045
7	SLU 47	0	0	0	0.0029	0.0088	-0.0059
7	SLU 48	0	0	0	0.0029	0.0088	-0.0059
7	SLU 49	0	0	0	0.0025	0.0088	-0.0049
7	SLU 50	0	0	0	0.0028	0.0088	-0.0056
7	SLU 51	0	0	0	0.003	0.0102	-0.0061
7	SLU 52	0	0	0	0.003	0.0102	-0.0061
7	SLU 53	0	0	0	0.0026	0.0102	-0.0051
7	SLU 54	0	0	0	0.0029	0.0102	-0.0059
7	SLU 55	0	0	0	0.0027	0.0115	-0.0054
7	SLU 56	0	0	0	0.003	0.0115	-0.0061
7	SLU 57	0	0	0	0.0027	0.0115	-0.0054
7	SLU 58	0	0	0	0.003	0.0115	-0.0061
7	SLU 59	0	0	0	0.0037	0.021	-0.0074
7	SLU 60	0	0	0	0.004	0.021	-0.0081
7	SLU 61	0	0	0	0.0037	0.021	-0.0074
7	SLU 62	0	0	0	0.004	0.021	-0.0082
7	SLU 63	0	0	0	0.0038	0.0224	-0.0076
7	SLU 64	0	0	0	0.0041	0.0224	-0.0084
7	SLU 65	0	0	0	0.0038	0.0224	-0.0076
7	SLU 66	0	0	0	0.0041	0.0224	-0.0084
7	SLU 67	0	0	0	0.0022	0.0008	-0.0041
7	SLU 68	0	0	0	0.0026	0.0008	-0.0051
7	SLU 69	0	0	0	0.0026	0.0008	-0.0052
7	SLU 70	0	0	0	0.0022	0.0008	-0.0042
7	SLU 71	0	0	0	0.0025	0.0008	-0.0049
7	SLU 72	0	0	0	0.0027	0.0022	-0.0054
7	SLU 73	0	0	0	0.0027	0.0022	-0.0054
7	SLU 74	0	0	0	0.0023	0.0022	-0.0044
7	SLU 75	0	0	0	0.0026	0.0022	-0.0052
7	SLU 76	0	0	0	0.0024	0.0036	-0.0046
7	SLU 77	0	0	0	0.0028	0.0036	-0.0054
7	SLU 78	0	0	0	0.0024	0.0036	-0.0046
7	SLU 79	0	0	0	0.0028	0.0036	-0.0054
7	SLU 80	0	0	0	0.0034	0.009	-0.0068
7	SLU 81	0	0	0	0.0034	0.009	-0.0068
7	SLU 82	0	0	0	0.003	0.009	-0.0058
7	SLU 83	0	0	0	0.0033	0.009	-0.0066
7	SLU 84	0	0	0	0.0035	0.0104	-0.0071
7	SLU 85	0	0	0	0.0035	0.0104	-0.0071
7	SLU 86	0	0	0	0.0031	0.0104	-0.0061
7	SLU 87	0	0	0	0.0034	0.0104	-0.0069
7	SLU 88	0	0	0	0.0032	0.0117	-0.0063
7	SLU 89	0	0	0	0.0035	0.0117	-0.0071
7	SLU 90	0	0	0	0.0032	0.0117	-0.0063
7	SLU 91	0	0	0	0.0035	0.0117	-0.0071
7	SLU 92	0	0	0	0.0042	0.0212	-0.0083

Nodo	Cont.	Spostamento			Rotazione		
Ind.	N.br.	ux	uy	uz	rx	ry	rz
7	SLU 93	0	0	0	0.0045	0.0212	-0.0091
7	SLU 94	0	0	0	0.0042	0.0212	-0.0083
7	SLU 95	0	0	0	0.0045	0.0212	-0.0091
7	SLU 96	0	0	0	0.0043	0.0226	-0.0086
7	SLU 97	0	0	0	0.0046	0.0226	-0.0093
7	SLU 98	0	0	0	0.0043	0.0226	-0.0086
7	SLU 99	0	0	0	0.0046	0.0226	-0.0094
7	SLU 100	0	0	0	0.0022	0.0008	-0.0041
7	SLU 101	0	0	0	0.0026	0.0008	-0.0051
7	SLU 102	0	0	0	0.0026	0.0008	-0.0052
7	SLU 103	0	0	0	0.0022	0.0008	-0.0042
7	SLU 104	0	0	0	0.0025	0.0008	-0.0049
7	SLU 105	0	0	0	0.0027	0.0022	-0.0054
7	SLU 106	0	0	0	0.0027	0.0022	-0.0054
7	SLU 107	0	0	0	0.0023	0.0022	-0.0044
7	SLU 108	0	0	0	0.0026	0.0022	-0.0052
7	SLU 109	0	0	0	0.0024	0.0036	-0.0046
7	SLU 110	0	0	0	0.0028	0.0036	-0.0054
7	SLU 111	0	0	0	0.0024	0.0036	-0.0046
7	SLU 112	0	0	0	0.0028	0.0036	-0.0054
7	SLU 113	0	0	0	0.0034	0.009	-0.0068
7	SLU 114	0	0	0	0.0034	0.009	-0.0068
7	SLU 115	0	0	0	0.003	0.009	-0.0058
7	SLU 116	0	0	0	0.0033	0.009	-0.0066
7	SLU 117	0	0	0	0.0035	0.0104	-0.0071
7	SLU 118	0	0	0	0.0035	0.0104	-0.0071
7	SLU 119	0	0	0	0.0031	0.0104	-0.0061
7	SLU 120	0	0	0	0.0034	0.0104	-0.0069
7	SLU 121	0	0	0	0.0032	0.0117	-0.0063
7	SLU 122	0	0	0	0.0035	0.0117	-0.0071
7	SLU 123	0	0	0	0.0032	0.0117	-0.0063
7	SLU 124	0	0	0	0.0035	0.0117	-0.0071
7	SLU 125	0	0	0	0.0042	0.0212	-0.0083
7	SLU 126	0	0	0	0.0045	0.0212	-0.0091
7	SLU 127	0	0	0	0.0042	0.0212	-0.0083
7	SLU 128	0	0	0	0.0045	0.0212	-0.0091
7	SLU 129	0	0	0	0.0043	0.0226	-0.0086
7	SLU 130	0	0	0	0.0046	0.0226	-0.0093
7	SLU 131	0	0	0	0.0043	0.0226	-0.0086
7	SLU 132	0	0	0	0.0046	0.0226	-0.0094
7	SLE RA 1	0	0	0	0.0017	0.0006	-0.0032
7	SLE RA 2	0	0	0	0.002	0.0006	-0.0039
7	SLE RA 3	0	0	0	0.002	0.0006	-0.0039
7	SLE RA 4	0	0	0	0.0017	0.0006	-0.0032
7	SLE RA 5	0	0	0	0.0019	0.0006	-0.0037
7	SLE RA 6	0	0	0	0.0021	0.0015	-0.004
7	SLE RA 7	0	0	0	0.0021	0.0015	-0.004
7	SLE RA 8	0	0	0	0.0018	0.0015	-0.0034
7	SLE RA 9	0	0	0	0.002	0.0015	-0.0039
7	SLE RA 10	0	0	0	0.0018	0.0025	-0.0035
7	SLE RA 11	0	0	0	0.0021	0.0025	-0.004
7	SLE RA 12	0	0	0	0.0019	0.0025	-0.0035
7	SLE RA 13	0	0	0	0.0021	0.0025	-0.004
7	SLE RA 14	0	0	0	0.0025	0.0061	-0.005
7	SLE RA 15	0	0	0	0.0025	0.0061	-0.005
7	SLE RA 16	0	0	0	0.0022	0.0061	-0.0043
7	SLE RA 17	0	0	0	0.0024	0.0061	-0.0048
7	SLE RA 18	0	0	0	0.0026	0.007	-0.0051
7	SLE RA 19	0	0	0	0.0026	0.007	-0.0051
7	SLE RA 20	0	0	0	0.0023	0.007	-0.0045
7	SLE RA 21	0	0	0	0.0025	0.007	-0.005
7	SLE RA 22	0	0	0	0.0024	0.0079	-0.0046
7	SLE RA 23	0	0	0	0.0026	0.0079	-0.0051
7	SLE RA 24	0	0	0	0.0024	0.0079	-0.0046
7	SLE RA 25	0	0	0	0.0026	0.0079	-0.0051
7	SLE RA 26	0	0	0	0.003	0.0142	-0.006
7	SLE RA 27	0	0	0	0.0032	0.0142	-0.0065
7	SLE RA 28	0	0	0	0.003	0.0142	-0.006
7	SLE RA 29	0	0	0	0.0032	0.0142	-0.0065
7	SLE RA 30	0	0	0	0.0031	0.0152	-0.0061
7	SLE RA 31	0	0	0	0.0033	0.0152	-0.0067
7	SLE RA 32	0	0	0	0.0031	0.0152	-0.0062
7	SLE RA 33	0	0	0	0.0033	0.0152	-0.0067
7	SLE FR 1	0	0	0	0.0017	0.0006	-0.0032
7	SLE FR 2	0	0	0	0.0019	0.0006	-0.0037
7	SLE FR 3	0	0	0	0.0017	0.0006	-0.0032
7	SLE FR 4	0	0	0	0.0017	0.001	-0.0032
7	SLE FR 5	0	0	0	0.0022	0.0061	-0.0043
7	SLE QP 1	0	0	0	0.0017	0.0006	-0.0032
7	SLO 1	0	0	0	-0.0972	-0.0538	0.2278
7	SLO 2	0	0	0	-0.0972	-0.0538	0.2278
7	SLO 3	0	0	0	0.0953	-0.0538	-0.2217
7	SLO 4	0	0	0	0.0953	-0.0538	-0.2217
7	SLO 5	0	0	0	-0.3198	-0.0157	0.7479
7	SLO 6	0	0	0	-0.3198	-0.0157	0.7479
7	SLO 7	0	0	0	0.3216	-0.0157	-0.7505
7	SLO 8	0	0	0	0.3216	-0.0157	-0.7505
7	SLO 9	0	0	0	-0.3182	0.017	0.7442
7	SLO 10	0	0	0	-0.3182	0.017	0.7442
7	SLO 11	0	0	0	0.3232	0.017	-0.7543
7	SLO 12	0	0	0	0.3232	0.017	-0.7543
7	SLO 13	0	0	0	-0.0919	0.0551	0.2154
7	SLO 14	0	0	0	-0.0919	0.0551	0.2154
7	SLO 15	0	0	0	0.1005	0.0551	-0.2341
7	SLO 16	0	0	0	0.1005	0.0551	-0.2341

Nodo	Cont.	Spostamento			Rotazione		
Ind.	N.br.	ux	uy	uz	rx	ry	rz
7	SLD 1	0	0	0	-0.0894	-0.0441	0.2096
7	SLD 2	0	0	0	-0.0894	-0.0441	0.2096
7	SLD 3	0	0	0	0.0884	-0.0441	-0.2058
7	SLD 4	0	0	0	0.0884	-0.0441	-0.2058
7	SLD 5	0	0	0	-0.2953	-0.0128	0.6906
7	SLD 6	0	0	0	-0.2953	-0.0128	0.6906
7	SLD 7	0	0	0	0.2974	-0.0128	-0.6939
7	SLD 8	0	0	0	0.2974	-0.0128	-0.6939
7	SLD 9	0	0	0	-0.294	0.014	0.6876
7	SLD 10	0	0	0	-0.294	0.014	0.6876
7	SLD 11	0	0	0	0.2987	0.014	-0.697
7	SLD 12	0	0	0	0.2987	0.014	-0.697
7	SLD 13	0	0	0	-0.0851	0.0453	0.1994
7	SLD 14	0	0	0	-0.0851	0.0453	0.1994
7	SLD 15	0	0	0	0.0927	0.0453	-0.2159
7	SLD 16	0	0	0	0.0927	0.0453	-0.2159
7	SLV 1	0	0	0	-0.2376	-0.0992	0.5559
7	SLV 2	0	0	0	-0.2376	-0.0992	0.5559
7	SLV 3	0	0	0	0.2313	-0.0992	-0.5396
7	SLV 4	0	0	0	0.2313	-0.0992	-0.5396
7	SLV 5	0	0	0	-0.7813	-0.0293	1.8261
7	SLV 6	0	0	0	-0.7813	-0.0293	1.8261
7	SLV 7	0	0	0	0.7818	-0.0293	-1.8257
7	SLV 8	0	0	0	0.7818	-0.0293	-1.8257
7	SLV 9	0	0	0	-0.7785	0.0306	1.8193
7	SLV 10	0	0	0	-0.7785	0.0306	1.8193
7	SLV 11	0	0	0	0.7847	0.0306	-1.8325
7	SLV 12	0	0	0	0.7847	0.0306	-1.8325
7	SLV 13	0	0	0	-0.228	0.1005	0.5333
7	SLV 14	0	0	0	-0.228	0.1005	0.5333
7	SLV 15	0	0	0	0.241	0.1005	-0.5623
7	SLV 16	0	0	0	0.241	0.1005	-0.5623
8	SLU 1	0	0	0	0.0006	0.0024	0.0012
8	SLU 2	0	0	0	0.001	-0.0196	0.0021
8	SLU 3	0	0	0	0.001	-0.0196	0.0021
8	SLU 4	0	0	0	0.0006	0.0024	0.0013
8	SLU 5	0	0	0	0.0009	-0.0141	0.0019
8	SLU 6	0	0	0	0.001	-0.0198	0.0022
8	SLU 7	0	0	0	0.001	-0.0198	0.0022
8	SLU 8	0	0	0	0.0007	0.0022	0.0013
8	SLU 9	0	0	0	0.001	-0.0143	0.002
8	SLU 10	0	0	0	0.0007	0.0019	0.0014
8	SLU 11	0	0	0	0.001	-0.0145	0.0021
8	SLU 12	0	0	0	0.0007	0.0019	0.0014
8	SLU 13	0	0	0	0.001	-0.0145	0.0021
8	SLU 14	0	0	0	0.0012	-0.0197	0.0024
8	SLU 15	0	0	0	0.0012	-0.0197	0.0024
8	SLU 16	0	0	0	0.0008	0.0023	0.0016
8	SLU 17	0	0	0	0.0011	-0.0142	0.0022
8	SLU 18	0	0	0	0.0012	-0.0199	0.0025
8	SLU 19	0	0	0	0.0012	-0.0199	0.0025
8	SLU 20	0	0	0	0.0008	0.0021	0.0016
8	SLU 21	0	0	0	0.0011	-0.0144	0.0023
8	SLU 22	0	0	0	0.0009	0.0018	0.0017
8	SLU 23	0	0	0	0.0011	-0.0147	0.0024
8	SLU 24	0	0	0	0.0009	0.0018	0.0017
8	SLU 25	0	0	0	0.0011	-0.0147	0.0024
8	SLU 26	0	0	0	0.001	0.0021	0.002
8	SLU 27	0	0	0	0.0013	-0.0144	0.0026
8	SLU 28	0	0	0	0.001	0.0021	0.002
8	SLU 29	0	0	0	0.0013	-0.0144	0.0027
8	SLU 30	0	0	0	0.001	0.0019	0.0021
8	SLU 31	0	0	0	0.0013	-0.0146	0.0027
8	SLU 32	0	0	0	0.001	0.0019	0.0021
8	SLU 33	0	0	0	0.0013	-0.0146	0.0027
8	SLU 34	0	0	0	0.0006	0.0024	0.0012
8	SLU 35	0	0	0	0.001	-0.0196	0.0021
8	SLU 36	0	0	0	0.001	-0.0196	0.0021
8	SLU 37	0	0	0	0.0006	0.0024	0.0013
8	SLU 38	0	0	0	0.0009	-0.0141	0.0019
8	SLU 39	0	0	0	0.001	-0.0198	0.0022
8	SLU 40	0	0	0	0.001	-0.0198	0.0022
8	SLU 41	0	0	0	0.0007	0.0022	0.0013
8	SLU 42	0	0	0	0.001	-0.0143	0.002
8	SLU 43	0	0	0	0.0007	0.0019	0.0014
8	SLU 44	0	0	0	0.001	-0.0145	0.0021
8	SLU 45	0	0	0	0.0007	0.0019	0.0014
8	SLU 46	0	0	0	0.001	-0.0145	0.0021
8	SLU 47	0	0	0	0.0012	-0.0197	0.0024
8	SLU 48	0	0	0	0.0012	-0.0197	0.0024
8	SLU 49	0	0	0	0.0008	0.0023	0.0016
8	SLU 50	0	0	0	0.0011	-0.0142	0.0022
8	SLU 51	0	0	0	0.0012	-0.0199	0.0025
8	SLU 52	0	0	0	0.0012	-0.0199	0.0025
8	SLU 53	0	0	0	0.0008	0.0021	0.0016
8	SLU 54	0	0	0	0.0011	-0.0144	0.0023
8	SLU 55	0	0	0	0.0009	0.0018	0.0017
8	SLU 56	0	0	0	0.0011	-0.0147	0.0024
8	SLU 57	0	0	0	0.0009	0.0018	0.0017
8	SLU 58	0	0	0	0.0011	-0.0147	0.0024
8	SLU 59	0	0	0	0.001	0.0021	0.002
8	SLU 60	0	0	0	0.0013	-0.0144	0.0026
8	SLU 61	0	0	0	0.001	0.0021	0.002
8	SLU 62	0	0	0	0.0013	-0.0144	0.0027
8	SLU 63	0	0	0	0.001	0.0019	0.0021

Nodo	Cont.	Spostamento			Rotazione		
Ind.	N.br.	ux	uy	uz	rx	ry	rz
8	SLU 64	0	0	0	0.0013	-0.0146	0.0027
8	SLU 65	0	0	0	0.001	0.0019	0.0021
8	SLU 66	0	0	0	0.0013	-0.0146	0.0027
8	SLU 67	0	0	0	0.0008	0.0031	0.0016
8	SLU 68	0	0	0	0.0012	-0.0189	0.0025
8	SLU 69	0	0	0	0.0012	-0.0189	0.0025
8	SLU 70	0	0	0	0.0008	0.0031	0.0016
8	SLU 71	0	0	0	0.0011	-0.0134	0.0023
8	SLU 72	0	0	0	0.0012	-0.0191	0.0026
8	SLU 73	0	0	0	0.0012	-0.0191	0.0026
8	SLU 74	0	0	0	0.0009	0.0029	0.0017
8	SLU 75	0	0	0	0.0011	-0.0136	0.0024
8	SLU 76	0	0	0	0.0009	0.0027	0.0018
8	SLU 77	0	0	0	0.0012	-0.0138	0.0024
8	SLU 78	0	0	0	0.0009	0.0027	0.0018
8	SLU 79	0	0	0	0.0012	-0.0138	0.0024
8	SLU 80	0	0	0	0.0013	-0.019	0.0028
8	SLU 81	0	0	0	0.0013	-0.019	0.0028
8	SLU 82	0	0	0	0.001	0.003	0.0019
8	SLU 83	0	0	0	0.0013	-0.0135	0.0026
8	SLU 84	0	0	0	0.0014	-0.0192	0.0029
8	SLU 85	0	0	0	0.0014	-0.0192	0.0029
8	SLU 86	0	0	0	0.001	0.0028	0.002
8	SLU 87	0	0	0	0.0013	-0.0137	0.0027
8	SLU 88	0	0	0	0.001	0.0025	0.0021
8	SLU 89	0	0	0	0.0013	-0.0139	0.0027
8	SLU 90	0	0	0	0.001	0.0025	0.0021
8	SLU 91	0	0	0	0.0013	-0.0139	0.0027
8	SLU 92	0	0	0	0.0012	0.0028	0.0023
8	SLU 93	0	0	0	0.0015	-0.0137	0.003
8	SLU 94	0	0	0	0.0012	0.0028	0.0024
8	SLU 95	0	0	0	0.0015	-0.0137	0.003
8	SLU 96	0	0	0	0.0012	0.0026	0.0024
8	SLU 97	0	0	0	0.0015	-0.0139	0.0031
8	SLU 98	0	0	0	0.0012	0.0026	0.0024
8	SLU 99	0	0	0	0.0015	-0.0139	0.0031
8	SLU 100	0	0	0	0.0008	0.0031	0.0016
8	SLU 101	0	0	0	0.0012	-0.0189	0.0025
8	SLU 102	0	0	0	0.0012	-0.0189	0.0025
8	SLU 103	0	0	0	0.0008	0.0031	0.0016
8	SLU 104	0	0	0	0.0011	-0.0134	0.0023
8	SLU 105	0	0	0	0.0012	-0.0191	0.0026
8	SLU 106	0	0	0	0.0012	-0.0191	0.0026
8	SLU 107	0	0	0	0.0009	0.0029	0.0017
8	SLU 108	0	0	0	0.0011	-0.0136	0.0024
8	SLU 109	0	0	0	0.0009	0.0027	0.0018
8	SLU 110	0	0	0	0.0012	-0.0138	0.0024
8	SLU 111	0	0	0	0.0009	0.0027	0.0018
8	SLU 112	0	0	0	0.0012	-0.0138	0.0024
8	SLU 113	0	0	0	0.0013	-0.019	0.0028
8	SLU 114	0	0	0	0.0013	-0.019	0.0028
8	SLU 115	0	0	0	0.001	0.003	0.0019
8	SLU 116	0	0	0	0.0013	-0.0135	0.0026
8	SLU 117	0	0	0	0.0014	-0.0192	0.0029
8	SLU 118	0	0	0	0.0014	-0.0192	0.0029
8	SLU 119	0	0	0	0.001	0.0028	0.002
8	SLU 120	0	0	0	0.0013	-0.0137	0.0027
8	SLU 121	0	0	0	0.001	0.0025	0.0021
8	SLU 122	0	0	0	0.0013	-0.0139	0.0027
8	SLU 123	0	0	0	0.001	0.0025	0.0021
8	SLU 124	0	0	0	0.0013	-0.0139	0.0027
8	SLU 125	0	0	0	0.0012	0.0028	0.0023
8	SLU 126	0	0	0	0.0015	-0.0137	0.003
8	SLU 127	0	0	0	0.0012	0.0028	0.0024
8	SLU 128	0	0	0	0.0015	-0.0137	0.003
8	SLU 129	0	0	0	0.0012	0.0026	0.0024
8	SLU 130	0	0	0	0.0015	-0.0139	0.0031
8	SLU 131	0	0	0	0.0012	0.0026	0.0024
8	SLU 132	0	0	0	0.0015	-0.0139	0.0031
8	SLE RA 1	0	0	0	0.0006	0.0024	0.0012
8	SLE RA 2	0	0	0	0.0009	-0.0123	0.0018
8	SLE RA 3	0	0	0	0.0009	-0.0123	0.0018
8	SLE RA 4	0	0	0	0.0006	0.0024	0.0012
8	SLE RA 5	0	0	0	0.0008	-0.0086	0.0017
8	SLE RA 6	0	0	0	0.0009	-0.0124	0.0019
8	SLE RA 7	0	0	0	0.0009	-0.0124	0.0019
8	SLE RA 8	0	0	0	0.0007	0.0022	0.0013
8	SLE RA 9	0	0	0	0.0009	-0.0087	0.0017
8	SLE RA 10	0	0	0	0.0007	0.0021	0.0013
8	SLE RA 11	0	0	0	0.0009	-0.0089	0.0018
8	SLE RA 12	0	0	0	0.0007	0.0021	0.0013
8	SLE RA 13	0	0	0	0.0009	-0.0089	0.0018
8	SLE RA 14	0	0	0	0.001	-0.0123	0.002
8	SLE RA 15	0	0	0	0.001	-0.0123	0.002
8	SLE RA 16	0	0	0	0.0007	0.0023	0.0014
8	SLE RA 17	0	0	0	0.0009	-0.0087	0.0019
8	SLE RA 18	0	0	0	0.001	-0.0125	0.0021
8	SLE RA 19	0	0	0	0.001	-0.0125	0.0021
8	SLE RA 20	0	0	0	0.0008	0.0022	0.0015
8	SLE RA 21	0	0	0	0.001	-0.0088	0.0019
8	SLE RA 22	0	0	0	0.0008	0.002	0.0015
8	SLE RA 23	0	0	0	0.001	-0.009	0.002
8	SLE RA 24	0	0	0	0.0008	0.002	0.0015
8	SLE RA 25	0	0	0	0.001	-0.009	0.002
8	SLE RA 26	0	0	0	0.0009	0.0022	0.0017

Nodo	Cont.	Spostamento			Rotazione		
Ind.	N.br.	ux	uy	uz	rx	ry	rz
8	SLE RA 27	0	0	0	0.0011	-0.0088	0.0022
8	SLE RA 28	0	0	0	0.0009	0.0022	0.0017
8	SLE RA 29	0	0	0	0.0011	-0.0088	0.0022
8	SLE RA 30	0	0	0	0.0009	0.0021	0.0018
8	SLE RA 31	0	0	0	0.0011	-0.0089	0.0022
8	SLE RA 32	0	0	0	0.0009	0.0021	0.0018
8	SLE RA 33	0	0	0	0.0011	-0.0089	0.0022
8	SLE FR 1	0	0	0	0.0006	0.0024	0.0012
8	SLE FR 2	0	0	0	0.0008	-0.0086	0.0017
8	SLE FR 3	0	0	0	0.0006	0.0024	0.0012
8	SLE FR 4	0	0	0	0.0006	0.0023	0.0012
8	SLE FR 5	0	0	0	0.0007	0.0023	0.0014
8	SLE QP 1	0	0	0	0.0006	0.0024	0.0012
8	SLO 1	0	0	0	-0.092	-0.0037	-0.2153
8	SLO 2	0	0	0	-0.092	-0.0037	-0.2153
8	SLO 3	0	0	0	0.0956	-0.0037	0.2233
8	SLO 4	0	0	0	0.0956	-0.0037	0.2233
8	SLO 5	0	0	0	-0.3117	0.0006	-0.729
8	SLO 6	0	0	0	-0.3117	0.0006	-0.729
8	SLO 7	0	0	0	0.3137	0.0006	0.7331
8	SLO 8	0	0	0	0.3137	0.0006	0.7331
8	SLO 9	0	0	0	-0.3124	0.0042	-0.7306
8	SLO 10	0	0	0	-0.3124	0.0042	-0.7306
8	SLO 11	0	0	0	0.313	0.0042	0.7314
8	SLO 12	0	0	0	0.313	0.0042	0.7314
8	SLO 13	0	0	0	-0.0944	0.0084	-0.2208
8	SLO 14	0	0	0	-0.0944	0.0084	-0.2208
8	SLO 15	0	0	0	0.0933	0.0084	0.2178
8	SLO 16	0	0	0	0.0933	0.0084	0.2178
8	SLD 1	0	0	0	-0.0851	-0.0026	-0.1992
8	SLD 2	0	0	0	-0.0851	-0.0026	-0.1992
8	SLD 3	0	0	0	0.0883	-0.0026	0.2061
8	SLD 4	0	0	0	0.0883	-0.0026	0.2061
8	SLD 5	0	0	0	-0.288	0.0009	-0.6736
8	SLD 6	0	0	0	-0.288	0.0009	-0.6736
8	SLD 7	0	0	0	0.2899	0.0009	0.6774
8	SLD 8	0	0	0	0.2899	0.0009	0.6774
8	SLD 9	0	0	0	-0.2886	0.0039	-0.6749
8	SLD 10	0	0	0	-0.2886	0.0039	-0.6749
8	SLD 11	0	0	0	0.2893	0.0039	0.676
8	SLD 12	0	0	0	0.2893	0.0039	0.676
8	SLD 13	0	0	0	-0.087	0.0074	-0.2037
8	SLD 14	0	0	0	-0.087	0.0074	-0.2037
8	SLD 15	0	0	0	0.0864	0.0074	0.2016
8	SLD 16	0	0	0	0.0864	0.0074	0.2016
8	SLV 1	0	0	0	-0.2258	-0.0083	-0.5282
8	SLV 2	0	0	0	-0.2258	-0.0083	-0.5282
8	SLV 3	0	0	0	0.2314	-0.0083	0.5407
8	SLV 4	0	0	0	0.2314	-0.0083	0.5407
8	SLV 5	0	0	0	-0.7608	-0.0008	-1.7788
8	SLV 6	0	0	0	-0.7608	-0.0008	-1.7788
8	SLV 7	0	0	0	0.7633	-0.0008	1.7843
8	SLV 8	0	0	0	0.7633	-0.0008	1.7843
8	SLV 9	0	0	0	-0.7621	0.0056	-1.7818
8	SLV 10	0	0	0	-0.7621	0.0056	-1.7818
8	SLV 11	0	0	0	0.7621	0.0056	1.7813
8	SLV 12	0	0	0	0.7621	0.0056	1.7813
8	SLV 13	0	0	0	-0.2301	0.0131	-0.5383
8	SLV 14	0	0	0	-0.2301	0.0131	-0.5383
8	SLV 15	0	0	0	0.2271	0.0131	0.5306
8	SLV 16	0	0	0	0.2271	0.0131	0.5306
9	SLU 1	0	0	0	0.0006	-0.0024	-0.0012
9	SLU 2	0	0	0	0.001	0.0196	-0.0021
9	SLU 3	0	0	0	0.001	0.0196	-0.0021
9	SLU 4	0	0	0	0.0006	-0.0024	-0.0013
9	SLU 5	0	0	0	0.0009	0.0141	-0.0019
9	SLU 6	0	0	0	0.001	0.0198	-0.0022
9	SLU 7	0	0	0	0.0011	0.0198	-0.0022
9	SLU 8	0	0	0	0.0007	-0.0022	-0.0013
9	SLU 9	0	0	0	0.001	0.0143	-0.002
9	SLU 10	0	0	0	0.0007	-0.0019	-0.0014
9	SLU 11	0	0	0	0.001	0.0145	-0.0021
9	SLU 12	0	0	0	0.0007	-0.0019	-0.0014
9	SLU 13	0	0	0	0.001	0.0145	-0.0021
9	SLU 14	0	0	0	0.0012	0.0197	-0.0024
9	SLU 15	0	0	0	0.0012	0.0197	-0.0025
9	SLU 16	0	0	0	0.0008	-0.0023	-0.0016
9	SLU 17	0	0	0	0.0011	0.0142	-0.0022
9	SLU 18	0	0	0	0.0012	0.0199	-0.0025
9	SLU 19	0	0	0	0.0012	0.0199	-0.0025
9	SLU 20	0	0	0	0.0008	-0.0021	-0.0017
9	SLU 21	0	0	0	0.0011	0.0144	-0.0023
9	SLU 22	0	0	0	0.0009	-0.0018	-0.0017
9	SLU 23	0	0	0	0.0012	0.0147	-0.0024
9	SLU 24	0	0	0	0.0009	-0.0018	-0.0017
9	SLU 25	0	0	0	0.0012	0.0147	-0.0024
9	SLU 26	0	0	0	0.001	-0.0021	-0.002
9	SLU 27	0	0	0	0.0013	0.0144	-0.0027
9	SLU 28	0	0	0	0.001	-0.0021	-0.002
9	SLU 29	0	0	0	0.0013	0.0144	-0.0027
9	SLU 30	0	0	0	0.0011	-0.0019	-0.0021
9	SLU 31	0	0	0	0.0013	0.0146	-0.0028
9	SLU 32	0	0	0	0.0011	-0.0019	-0.0021
9	SLU 33	0	0	0	0.0014	0.0146	-0.0028
9	SLU 34	0	0	0	0.0006	-0.0024	-0.0012

Nodo	Cont.	Spostamento			Rotazione		
Ind.	N.br.	ux	uy	uz	rx	ry	rz
9	SLU 35	0	0	0	0.001	0.0196	-0.0021
9	SLU 36	0	0	0	0.001	0.0196	-0.0021
9	SLU 37	0	0	0	0.0006	-0.0024	-0.0013
9	SLU 38	0	0	0	0.0009	0.0141	-0.0019
9	SLU 39	0	0	0	0.001	0.0198	-0.0022
9	SLU 40	0	0	0	0.0011	0.0198	-0.0022
9	SLU 41	0	0	0	0.0007	-0.0022	-0.0013
9	SLU 42	0	0	0	0.001	0.0143	-0.002
9	SLU 43	0	0	0	0.0007	-0.0019	-0.0014
9	SLU 44	0	0	0	0.001	0.0145	-0.0021
9	SLU 45	0	0	0	0.0007	-0.0019	-0.0014
9	SLU 46	0	0	0	0.001	0.0145	-0.0021
9	SLU 47	0	0	0	0.0012	0.0197	-0.0024
9	SLU 48	0	0	0	0.0012	0.0197	-0.0025
9	SLU 49	0	0	0	0.0008	-0.0023	-0.0016
9	SLU 50	0	0	0	0.0011	0.0142	-0.0022
9	SLU 51	0	0	0	0.0012	0.0199	-0.0025
9	SLU 52	0	0	0	0.0012	0.0199	-0.0025
9	SLU 53	0	0	0	0.0008	-0.0021	-0.0017
9	SLU 54	0	0	0	0.0011	0.0144	-0.0023
9	SLU 55	0	0	0	0.0009	-0.0018	-0.0017
9	SLU 56	0	0	0	0.0012	0.0147	-0.0024
9	SLU 57	0	0	0	0.0009	-0.0018	-0.0017
9	SLU 58	0	0	0	0.0012	0.0147	-0.0024
9	SLU 59	0	0	0	0.001	-0.0021	-0.002
9	SLU 60	0	0	0	0.0013	0.0144	-0.0027
9	SLU 61	0	0	0	0.001	-0.0021	-0.002
9	SLU 62	0	0	0	0.0013	0.0144	-0.0027
9	SLU 63	0	0	0	0.0011	-0.0019	-0.0021
9	SLU 64	0	0	0	0.0013	0.0146	-0.0028
9	SLU 65	0	0	0	0.0011	-0.0019	-0.0021
9	SLU 66	0	0	0	0.0014	0.0146	-0.0028
9	SLU 67	0	0	0	0.0008	-0.0031	-0.0016
9	SLU 68	0	0	0	0.0012	0.0189	-0.0025
9	SLU 69	0	0	0	0.0012	0.0189	-0.0025
9	SLU 70	0	0	0	0.0008	-0.0031	-0.0016
9	SLU 71	0	0	0	0.0011	0.0134	-0.0023
9	SLU 72	0	0	0	0.0012	0.0191	-0.0026
9	SLU 73	0	0	0	0.0012	0.0191	-0.0026
9	SLU 74	0	0	0	0.0009	-0.0029	-0.0017
9	SLU 75	0	0	0	0.0012	0.0136	-0.0024
9	SLU 76	0	0	0	0.0009	-0.0027	-0.0018
9	SLU 77	0	0	0	0.0012	0.0138	-0.0024
9	SLU 78	0	0	0	0.0009	-0.0027	-0.0018
9	SLU 79	0	0	0	0.0012	0.0138	-0.0025
9	SLU 80	0	0	0	0.0013	0.019	-0.0028
9	SLU 81	0	0	0	0.0014	0.019	-0.0028
9	SLU 82	0	0	0	0.001	-0.003	-0.0019
9	SLU 83	0	0	0	0.0013	0.0135	-0.0026
9	SLU 84	0	0	0	0.0014	0.0192	-0.0029
9	SLU 85	0	0	0	0.0014	0.0192	-0.0029
9	SLU 86	0	0	0	0.001	-0.0028	-0.002
9	SLU 87	0	0	0	0.0013	0.0137	-0.0027
9	SLU 88	0	0	0	0.0011	-0.0025	-0.0021
9	SLU 89	0	0	0	0.0013	0.0139	-0.0028
9	SLU 90	0	0	0	0.0011	-0.0025	-0.0021
9	SLU 91	0	0	0	0.0013	0.0139	-0.0028
9	SLU 92	0	0	0	0.0012	-0.0028	-0.0024
9	SLU 93	0	0	0	0.0015	0.0137	-0.0031
9	SLU 94	0	0	0	0.0012	-0.0028	-0.0024
9	SLU 95	0	0	0	0.0015	0.0137	-0.0031
9	SLU 96	0	0	0	0.0013	-0.0026	-0.0025
9	SLU 97	0	0	0	0.0015	0.0139	-0.0031
9	SLU 98	0	0	0	0.0013	-0.0026	-0.0025
9	SLU 99	0	0	0	0.0015	0.0139	-0.0032
9	SLU 100	0	0	0	0.0008	-0.0031	-0.0016
9	SLU 101	0	0	0	0.0012	0.0189	-0.0025
9	SLU 102	0	0	0	0.0012	0.0189	-0.0025
9	SLU 103	0	0	0	0.0008	-0.0031	-0.0016
9	SLU 104	0	0	0	0.0011	0.0134	-0.0023
9	SLU 105	0	0	0	0.0012	0.0191	-0.0026
9	SLU 106	0	0	0	0.0012	0.0191	-0.0026
9	SLU 107	0	0	0	0.0009	-0.0029	-0.0017
9	SLU 108	0	0	0	0.0012	0.0136	-0.0024
9	SLU 109	0	0	0	0.0009	-0.0027	-0.0018
9	SLU 110	0	0	0	0.0012	0.0138	-0.0024
9	SLU 111	0	0	0	0.0009	-0.0027	-0.0018
9	SLU 112	0	0	0	0.0012	0.0138	-0.0025
9	SLU 113	0	0	0	0.0013	0.019	-0.0028
9	SLU 114	0	0	0	0.0014	0.019	-0.0028
9	SLU 115	0	0	0	0.001	-0.003	-0.0019
9	SLU 116	0	0	0	0.0013	0.0135	-0.0026
9	SLU 117	0	0	0	0.0014	0.0192	-0.0029
9	SLU 118	0	0	0	0.0014	0.0192	-0.0029
9	SLU 119	0	0	0	0.001	-0.0028	-0.002
9	SLU 120	0	0	0	0.0013	0.0137	-0.0027
9	SLU 121	0	0	0	0.0011	-0.0025	-0.0021
9	SLU 122	0	0	0	0.0013	0.0139	-0.0028
9	SLU 123	0	0	0	0.0011	-0.0025	-0.0021
9	SLU 124	0	0	0	0.0013	0.0139	-0.0028
9	SLU 125	0	0	0	0.0012	-0.0028	-0.0024
9	SLU 126	0	0	0	0.0015	0.0137	-0.0031
9	SLU 127	0	0	0	0.0012	-0.0028	-0.0024
9	SLU 128	0	0	0	0.0015	0.0137	-0.0031
9	SLU 129	0	0	0	0.0013	-0.0026	-0.0025

Nodo	Cont.	Spostamento			Rotazione		
Ind.	N.br.	ux	uy	uz	rx	ry	rz
9	SLU 130	0	0	0	0.0015	0.0139	-0.0031
9	SLU 131	0	0	0	0.0013	-0.0026	-0.0025
9	SLU 132	0	0	0	0.0015	0.0139	-0.0032
9	SLE RA 1	0	0	0	0.0006	-0.0024	-0.0012
9	SLE RA 2	0	0	0	0.0009	0.0123	-0.0018
9	SLE RA 3	0	0	0	0.0009	0.0123	-0.0018
9	SLE RA 4	0	0	0	0.0006	-0.0024	-0.0012
9	SLE RA 5	0	0	0	0.0008	0.0086	-0.0017
9	SLE RA 6	0	0	0	0.0009	0.0124	-0.0019
9	SLE RA 7	0	0	0	0.0009	0.0124	-0.0019
9	SLE RA 8	0	0	0	0.0007	-0.0022	-0.0013
9	SLE RA 9	0	0	0	0.0009	0.0087	-0.0018
9	SLE RA 10	0	0	0	0.0007	-0.0021	-0.0013
9	SLE RA 11	0	0	0	0.0009	0.0089	-0.0018
9	SLE RA 12	0	0	0	0.0007	-0.0021	-0.0014
9	SLE RA 13	0	0	0	0.0009	0.0089	-0.0018
9	SLE RA 14	0	0	0	0.001	0.0123	-0.002
9	SLE RA 15	0	0	0	0.001	0.0123	-0.002
9	SLE RA 16	0	0	0	0.0007	-0.0023	-0.0015
9	SLE RA 17	0	0	0	0.0009	0.0087	-0.0019
9	SLE RA 18	0	0	0	0.001	0.0125	-0.0021
9	SLE RA 19	0	0	0	0.001	0.0125	-0.0021
9	SLE RA 20	0	0	0	0.0008	-0.0022	-0.0015
9	SLE RA 21	0	0	0	0.001	0.0088	-0.002
9	SLE RA 22	0	0	0	0.0008	-0.002	-0.0016
9	SLE RA 23	0	0	0	0.001	0.009	-0.002
9	SLE RA 24	0	0	0	0.0008	-0.002	-0.0016
9	SLE RA 25	0	0	0	0.001	0.009	-0.002
9	SLE RA 26	0	0	0	0.0009	-0.0022	-0.0018
9	SLE RA 27	0	0	0	0.0011	0.0088	-0.0022
9	SLE RA 28	0	0	0	0.0009	-0.0022	-0.0018
9	SLE RA 29	0	0	0	0.0011	0.0088	-0.0022
9	SLE RA 30	0	0	0	0.0009	-0.0021	-0.0018
9	SLE RA 31	0	0	0	0.0011	0.0089	-0.0023
9	SLE RA 32	0	0	0	0.0009	-0.0021	-0.0018
9	SLE RA 33	0	0	0	0.0011	0.0089	-0.0023
9	SLE FR 1	0	0	0	0.0006	-0.0024	-0.0012
9	SLE FR 2	0	0	0	0.0008	0.0086	-0.0017
9	SLE FR 3	0	0	0	0.0006	-0.0024	-0.0012
9	SLE FR 4	0	0	0	0.0006	-0.0023	-0.0013
9	SLE FR 5	0	0	0	0.0007	-0.0023	-0.0014
9	SLE QP 1	0	0	0	0.0006	-0.0024	-0.0012
9	SLO 1	0	0	0	-0.0944	-0.0084	0.2208
9	SLO 2	0	0	0	-0.0944	-0.0084	0.2208
9	SLO 3	0	0	0	0.0933	-0.0084	-0.2178
9	SLO 4	0	0	0	0.0933	-0.0084	-0.2178
9	SLO 5	0	0	0	-0.3124	-0.0042	0.7306
9	SLO 6	0	0	0	-0.3124	-0.0042	0.7306
9	SLO 7	0	0	0	0.313	-0.0042	-0.7314
9	SLO 8	0	0	0	0.313	-0.0042	-0.7314
9	SLO 9	0	0	0	-0.3117	-0.0006	0.729
9	SLO 10	0	0	0	-0.3117	-0.0006	0.729
9	SLO 11	0	0	0	0.3137	-0.0006	-0.7331
9	SLO 12	0	0	0	0.3137	-0.0006	-0.7331
9	SLO 13	0	0	0	-0.092	0.0037	0.2153
9	SLO 14	0	0	0	-0.092	0.0037	0.2153
9	SLO 15	0	0	0	0.0956	0.0037	-0.2233
9	SLO 16	0	0	0	0.0956	0.0037	-0.2233
9	SLD 1	0	0	0	-0.087	-0.0074	0.2037
9	SLD 2	0	0	0	-0.087	-0.0074	0.2037
9	SLD 3	0	0	0	0.0864	-0.0074	-0.2016
9	SLD 4	0	0	0	0.0864	-0.0074	-0.2016
9	SLD 5	0	0	0	-0.2886	-0.0039	0.6749
9	SLD 6	0	0	0	-0.2886	-0.0039	0.6749
9	SLD 7	0	0	0	0.2893	-0.0039	-0.676
9	SLD 8	0	0	0	0.2893	-0.0039	-0.676
9	SLD 9	0	0	0	-0.288	-0.0009	0.6736
9	SLD 10	0	0	0	-0.288	-0.0009	0.6736
9	SLD 11	0	0	0	0.2899	-0.0009	-0.6774
9	SLD 12	0	0	0	0.2899	-0.0009	-0.6774
9	SLD 13	0	0	0	-0.0851	0.0026	0.1992
9	SLD 14	0	0	0	-0.0851	0.0026	0.1992
9	SLD 15	0	0	0	0.0883	0.0026	-0.2061
9	SLD 16	0	0	0	0.0883	0.0026	-0.2061
9	SLV 1	0	0	0	-0.2301	-0.0131	0.5383
9	SLV 2	0	0	0	-0.2301	-0.0131	0.5383
9	SLV 3	0	0	0	0.2271	-0.0131	-0.5306
9	SLV 4	0	0	0	0.2271	-0.0131	-0.5306
9	SLV 5	0	0	0	-0.7621	-0.0056	1.7818
9	SLV 6	0	0	0	-0.7621	-0.0056	1.7818
9	SLV 7	0	0	0	0.7621	-0.0056	-1.7813
9	SLV 8	0	0	0	0.7621	-0.0056	-1.7813
9	SLV 9	0	0	0	-0.7608	0.0008	1.7788
9	SLV 10	0	0	0	-0.7608	0.0008	1.7788
9	SLV 11	0	0	0	0.7633	0.0008	-1.7843
9	SLV 12	0	0	0	0.7633	0.0008	-1.7843
9	SLV 13	0	0	0	-0.2258	0.0083	0.5282
9	SLV 14	0	0	0	-0.2258	0.0083	0.5282
9	SLV 15	0	0	0	0.2314	0.0083	-0.5407
9	SLV 16	0	0	0	0.2314	0.0083	-0.5407
10	SLU 1	0	0	0	0.0001	0.0024	0.0001
10	SLU 2	0	0	0	0.0004	-0.0416	0.0009
10	SLU 3	0	0	0	0.0004	-0.0416	0.0009
10	SLU 4	0	0	0	0.0001	0.0024	0.0002
10	SLU 5	0	0	0	0.0004	-0.0306	0.0008

Nodo	Cont.	Spostamento			Rotazione		
Ind.	N.br.	ux	uy	uz	rx	ry	rz
10	SLU 6	0	0	0	0.0004	-0.0419	0.0009
10	SLU 7	0	0	0	0.0004	-0.0419	0.0009
10	SLU 8	0	0	0	0.0001	0.002	0.0002
10	SLU 9	0	0	0	0.0004	-0.0309	0.0008
10	SLU 10	0	0	0	0.0001	0.0017	0.0001
10	SLU 11	0	0	0	0.0004	-0.0313	0.0007
10	SLU 12	0	0	0	0.0001	0.0017	0.0002
10	SLU 13	0	0	0	0.0004	-0.0313	0.0007
10	SLU 14	0	0	0	0.0004	-0.0416	0.0008
10	SLU 15	0	0	0	0.0004	-0.0416	0.0008
10	SLU 16	0	0	0	0.0001	0.0023	0
10	SLU 17	0	0	0	0.0003	-0.0306	0.0006
10	SLU 18	0	0	0	0.0004	-0.0419	0.0008
10	SLU 19	0	0	0	0.0004	-0.0419	0.0008
10	SLU 20	0	0	0	0.0001	0.002	0
10	SLU 21	0	0	0	0.0003	-0.031	0.0006
10	SLU 22	0	0	0	0.0001	0.0017	0
10	SLU 23	0	0	0	0.0003	-0.0313	0.0006
10	SLU 24	0	0	0	0.0001	0.0017	0
10	SLU 25	0	0	0	0.0003	-0.0313	0.0006
10	SLU 26	0	0	0	0	0.0023	-0.0002
10	SLU 27	0	0	0	0.0002	-0.0307	0.0004
10	SLU 28	0	0	0	0	0.0023	-0.0002
10	SLU 29	0	0	0	0.0002	-0.0307	0.0004
10	SLU 30	0	0	0	0	0.002	-0.0002
10	SLU 31	0	0	0	0.0002	-0.031	0.0004
10	SLU 32	0	0	0	0	0.002	-0.0002
10	SLU 33	0	0	0	0.0002	-0.031	0.0004
10	SLU 34	0	0	0	0.0001	0.0024	0.0001
10	SLU 35	0	0	0	0.0004	-0.0416	0.0009
10	SLU 36	0	0	0	0.0004	-0.0416	0.0009
10	SLU 37	0	0	0	0.0001	0.0024	0.0002
10	SLU 38	0	0	0	0.0004	-0.0306	0.0008
10	SLU 39	0	0	0	0.0004	-0.0419	0.0009
10	SLU 40	0	0	0	0.0004	-0.0419	0.0009
10	SLU 41	0	0	0	0.0001	0.002	0.0002
10	SLU 42	0	0	0	0.0004	-0.0309	0.0008
10	SLU 43	0	0	0	0.0001	0.0017	0.0001
10	SLU 44	0	0	0	0.0004	-0.0313	0.0007
10	SLU 45	0	0	0	0.0001	0.0017	0.0002
10	SLU 46	0	0	0	0.0004	-0.0313	0.0007
10	SLU 47	0	0	0	0.0004	-0.0416	0.0008
10	SLU 48	0	0	0	0.0004	-0.0416	0.0008
10	SLU 49	0	0	0	0.0001	0.0023	0
10	SLU 50	0	0	0	0.0003	-0.0306	0.0006
10	SLU 51	0	0	0	0.0004	-0.0419	0.0008
10	SLU 52	0	0	0	0.0004	-0.0419	0.0008
10	SLU 53	0	0	0	0.0001	0.002	0
10	SLU 54	0	0	0	0.0003	-0.031	0.0006
10	SLU 55	0	0	0	0.0001	0.0017	0
10	SLU 56	0	0	0	0.0003	-0.0313	0.0006
10	SLU 57	0	0	0	0.0001	0.0017	0
10	SLU 58	0	0	0	0.0003	-0.0313	0.0006
10	SLU 59	0	0	0	0	0.0023	-0.0002
10	SLU 60	0	0	0	0.0002	-0.0307	0.0004
10	SLU 61	0	0	0	0	0.0023	-0.0002
10	SLU 62	0	0	0	0.0002	-0.0307	0.0004
10	SLU 63	0	0	0	0	0.002	-0.0002
10	SLU 64	0	0	0	0.0002	-0.031	0.0004
10	SLU 65	0	0	0	0	0.002	-0.0002
10	SLU 66	0	0	0	0.0002	-0.031	0.0004
10	SLU 67	0	0	0	0.0001	0.0031	0.0002
10	SLU 68	0	0	0	0.0005	-0.0409	0.001
10	SLU 69	0	0	0	0.0005	-0.0409	0.001
10	SLU 70	0	0	0	0.0001	0.0031	0.0002
10	SLU 71	0	0	0	0.0004	-0.0299	0.0008
10	SLU 72	0	0	0	0.0005	-0.0412	0.001
10	SLU 73	0	0	0	0.0005	-0.0412	0.001
10	SLU 74	0	0	0	0.0001	0.0028	0.0002
10	SLU 75	0	0	0	0.0004	-0.0302	0.0008
10	SLU 76	0	0	0	0.0001	0.0024	0.0002
10	SLU 77	0	0	0	0.0004	-0.0305	0.0008
10	SLU 78	0	0	0	0.0001	0.0024	0.0002
10	SLU 79	0	0	0	0.0004	-0.0305	0.0008
10	SLU 80	0	0	0	0.0004	-0.0409	0.0008
10	SLU 81	0	0	0	0.0004	-0.0409	0.0008
10	SLU 82	0	0	0	0.0001	0.0031	0.0001
10	SLU 83	0	0	0	0.0003	-0.0299	0.0007
10	SLU 84	0	0	0	0.0004	-0.0412	0.0008
10	SLU 85	0	0	0	0.0004	-0.0412	0.0008
10	SLU 86	0	0	0	0.0001	0.0027	0.0001
10	SLU 87	0	0	0	0.0003	-0.0302	0.0007
10	SLU 88	0	0	0	0.0001	0.0024	0.0001
10	SLU 89	0	0	0	0.0003	-0.0306	0.0006
10	SLU 90	0	0	0	0.0001	0.0024	0.0001
10	SLU 91	0	0	0	0.0003	-0.0306	0.0007
10	SLU 92	0	0	0	0	0.003	-0.0002
10	SLU 93	0	0	0	0.0003	-0.03	0.0004
10	SLU 94	0	0	0	0	0.003	-0.0001
10	SLU 95	0	0	0	0.0003	-0.03	0.0004
10	SLU 96	0	0	0	0	0.0027	-0.0002
10	SLU 97	0	0	0	0.0003	-0.0303	0.0004
10	SLU 98	0	0	0	0	0.0027	-0.0001
10	SLU 99	0	0	0	0.0003	-0.0303	0.0004
10	SLU 100	0	0	0	0.0001	0.0031	0.0002

Nodo	Cont.	Spostamento			Rotazione		
Ind.	N.br.	ux	uy	uz	rx	ry	rz
10	SLU 101	0	0	0	0.0005	-0.0409	0.001
10	SLU 102	0	0	0	0.0005	-0.0409	0.001
10	SLU 103	0	0	0	0.0001	0.0031	0.0002
10	SLU 104	0	0	0	0.0004	-0.0299	0.0008
10	SLU 105	0	0	0	0.0005	-0.0412	0.001
10	SLU 106	0	0	0	0.0005	-0.0412	0.001
10	SLU 107	0	0	0	0.0001	0.0028	0.0002
10	SLU 108	0	0	0	0.0004	-0.0302	0.0008
10	SLU 109	0	0	0	0.0001	0.0024	0.0002
10	SLU 110	0	0	0	0.0004	-0.0305	0.0008
10	SLU 111	0	0	0	0.0001	0.0024	0.0002
10	SLU 112	0	0	0	0.0004	-0.0305	0.0008
10	SLU 113	0	0	0	0.0004	-0.0409	0.0008
10	SLU 114	0	0	0	0.0004	-0.0409	0.0008
10	SLU 115	0	0	0	0.0001	0.0031	0.0001
10	SLU 116	0	0	0	0.0003	-0.0299	0.0007
10	SLU 117	0	0	0	0.0004	-0.0412	0.0008
10	SLU 118	0	0	0	0.0004	-0.0412	0.0008
10	SLU 119	0	0	0	0.0001	0.0027	0.0001
10	SLU 120	0	0	0	0.0003	-0.0302	0.0007
10	SLU 121	0	0	0	0.0001	0.0024	0.0001
10	SLU 122	0	0	0	0.0003	-0.0306	0.0006
10	SLU 123	0	0	0	0.0001	0.0024	0.0001
10	SLU 124	0	0	0	0.0003	-0.0306	0.0007
10	SLU 125	0	0	0	0	0.003	-0.0002
10	SLU 126	0	0	0	0.0003	-0.03	0.0004
10	SLU 127	0	0	0	0	0.003	-0.0001
10	SLU 128	0	0	0	0.0003	-0.03	0.0004
10	SLU 129	0	0	0	0	0.0027	-0.0002
10	SLU 130	0	0	0	0.0003	-0.0303	0.0004
10	SLU 131	0	0	0	0	0.0027	-0.0001
10	SLU 132	0	0	0	0.0003	-0.0303	0.0004
10	SLE RA 1	0	0	0	0.0001	0.0024	0.0001
10	SLE RA 2	0	0	0	0.0003	-0.0269	0.0007
10	SLE RA 3	0	0	0	0.0003	-0.0269	0.0007
10	SLE RA 4	0	0	0	0.0001	0.0024	0.0002
10	SLE RA 5	0	0	0	0.0003	-0.0196	0.0005
10	SLE RA 6	0	0	0	0.0003	-0.0272	0.0007
10	SLE RA 7	0	0	0	0.0003	-0.0272	0.0007
10	SLE RA 8	0	0	0	0.0001	0.0022	0.0002
10	SLE RA 9	0	0	0	0.0003	-0.0198	0.0006
10	SLE RA 10	0	0	0	0.0001	0.0019	0.0001
10	SLE RA 11	0	0	0	0.0003	-0.02	0.0005
10	SLE RA 12	0	0	0	0.0001	0.0019	0.0002
10	SLE RA 13	0	0	0	0.0003	-0.02	0.0005
10	SLE RA 14	0	0	0	0.0003	-0.0269	0.0006
10	SLE RA 15	0	0	0	0.0003	-0.0269	0.0006
10	SLE RA 16	0	0	0	0.0001	0.0024	0.0001
10	SLE RA 17	0	0	0	0.0002	-0.0196	0.0005
10	SLE RA 18	0	0	0	0.0003	-0.0272	0.0006
10	SLE RA 19	0	0	0	0.0003	-0.0272	0.0006
10	SLE RA 20	0	0	0	0.0001	0.0021	0.0001
10	SLE RA 21	0	0	0	0.0002	-0.0198	0.0005
10	SLE RA 22	0	0	0	0.0001	0.0019	0.0001
10	SLE RA 23	0	0	0	0.0002	-0.0201	0.0004
10	SLE RA 24	0	0	0	0.0001	0.0019	0.0001
10	SLE RA 25	0	0	0	0.0002	-0.0201	0.0005
10	SLE RA 26	0	0	0	0	0.0023	-0.0001
10	SLE RA 27	0	0	0	0.0002	-0.0197	0.0003
10	SLE RA 28	0	0	0	0	0.0023	-0.0001
10	SLE RA 29	0	0	0	0.0002	-0.0197	0.0003
10	SLE RA 30	0	0	0	0	0.0021	-0.0001
10	SLE RA 31	0	0	0	0.0002	-0.0199	0.0003
10	SLE RA 32	0	0	0	0	0.0021	-0.0001
10	SLE RA 33	0	0	0	0.0002	-0.0199	0.0003
10	SLE FR 1	0	0	0	0.0001	0.0024	0.0001
10	SLE FR 2	0	0	0	0.0003	-0.0196	0.0005
10	SLE FR 3	0	0	0	0.0001	0.0024	0.0001
10	SLE FR 4	0	0	0	0.0001	0.0023	0.0001
10	SLE FR 5	0	0	0	0.0001	0.0024	0
10	SLE QP 1	0	0	0	0.0001	0.0024	0.0001
10	SLO 1	0	0	0	-0.0937	-0.0037	-0.2191
10	SLO 2	0	0	0	-0.0937	-0.0037	-0.2191
10	SLO 3	0	0	0	0.0939	-0.0037	0.2194
10	SLO 4	0	0	0	0.0939	-0.0037	0.2194
10	SLO 5	0	0	0	-0.3125	0.0006	-0.7308
10	SLO 6	0	0	0	-0.3125	0.0006	-0.7308
10	SLO 7	0	0	0	0.3127	0.0006	0.7311
10	SLO 8	0	0	0	0.3127	0.0006	0.7311
10	SLO 9	0	0	0	-0.3125	0.0042	-0.7308
10	SLO 10	0	0	0	-0.3125	0.0042	-0.7308
10	SLO 11	0	0	0	0.3127	0.0042	0.7311
10	SLO 12	0	0	0	0.3127	0.0042	0.7311
10	SLO 13	0	0	0	-0.0937	0.0085	-0.2191
10	SLO 14	0	0	0	-0.0937	0.0085	-0.2191
10	SLO 15	0	0	0	0.0939	0.0085	0.2194
10	SLO 16	0	0	0	0.0939	0.0085	0.2194
10	SLD 1	0	0	0	-0.0866	-0.0026	-0.2025
10	SLD 2	0	0	0	-0.0866	-0.0026	-0.2025
10	SLD 3	0	0	0	0.0868	-0.0026	0.2027
10	SLD 4	0	0	0	0.0868	-0.0026	0.2027
10	SLD 5	0	0	0	-0.2888	0.0009	-0.6752
10	SLD 6	0	0	0	-0.2888	0.0009	-0.6752
10	SLD 7	0	0	0	0.289	0.0009	0.6755
10	SLD 8	0	0	0	0.289	0.0009	0.6755

Nodo	Cont.	Spostamento			Rotazione		
Ind.	N.br.	ux	uy	uz	rx	ry	rz
10	SLD 9	0	0	0	-0.2888	0.0039	-0.6752
10	SLD 10	0	0	0	-0.2888	0.0039	-0.6752
10	SLD 11	0	0	0	0.289	0.0039	0.6755
10	SLD 12	0	0	0	0.289	0.0039	0.6755
10	SLD 13	0	0	0	-0.0866	0.0074	-0.2025
10	SLD 14	0	0	0	-0.0866	0.0074	-0.2025
10	SLD 15	0	0	0	0.0868	0.0074	0.2027
10	SLD 16	0	0	0	0.0868	0.0074	0.2027
10	SLV 1	0	0	0	-0.2285	-0.0084	-0.5343
10	SLV 2	0	0	0	-0.2285	-0.0084	-0.5343
10	SLV 3	0	0	0	0.2287	-0.0084	0.5345
10	SLV 4	0	0	0	0.2287	-0.0084	0.5345
10	SLV 5	0	0	0	-0.7618	-0.0009	-1.7812
10	SLV 6	0	0	0	-0.7618	-0.0009	-1.7812
10	SLV 7	0	0	0	0.762	-0.0009	1.7814
10	SLV 8	0	0	0	0.762	-0.0009	1.7814
10	SLV 9	0	0	0	-0.7618	0.0056	-1.7812
10	SLV 10	0	0	0	-0.7618	0.0056	-1.7812
10	SLV 11	0	0	0	0.762	0.0056	1.7815
10	SLV 12	0	0	0	0.762	0.0056	1.7815
10	SLV 13	0	0	0	-0.2285	0.0131	-0.5343
10	SLV 14	0	0	0	-0.2285	0.0131	-0.5343
10	SLV 15	0	0	0	0.2287	0.0131	0.5345
10	SLV 16	0	0	0	0.2287	0.0131	0.5345
11	SLU 1	0	0	0	0.0001	-0.0024	-0.0001
11	SLU 2	0	0	0	0.0004	0.0416	-0.0009
11	SLU 3	0	0	0	0.0004	0.0416	-0.0009
11	SLU 4	0	0	0	0.0001	-0.0024	-0.0002
11	SLU 5	0	0	0	0.0004	0.0306	-0.0008
11	SLU 6	0	0	0	0.0004	0.0419	-0.0009
11	SLU 7	0	0	0	0.0004	0.0419	-0.0009
11	SLU 8	0	0	0	0.0001	-0.0021	-0.0002
11	SLU 9	0	0	0	0.0004	0.0309	-0.0008
11	SLU 10	0	0	0	0.0001	-0.0018	-0.0002
11	SLU 11	0	0	0	0.0004	0.0311	-0.0007
11	SLU 12	0	0	0	0.0001	-0.0018	-0.0002
11	SLU 13	0	0	0	0.0004	0.0311	-0.0008
11	SLU 14	0	0	0	0.0004	0.0415	-0.0008
11	SLU 15	0	0	0	0.0004	0.0415	-0.0008
11	SLU 16	0	0	0	0.0001	-0.0025	0
11	SLU 17	0	0	0	0.0003	0.0305	-0.0006
11	SLU 18	0	0	0	0.0004	0.0418	-0.0008
11	SLU 19	0	0	0	0.0004	0.0418	-0.0008
11	SLU 20	0	0	0	0.0001	-0.0022	-0.0001
11	SLU 21	0	0	0	0.0003	0.0308	-0.0006
11	SLU 22	0	0	0	0.0001	-0.0019	0
11	SLU 23	0	0	0	0.0003	0.0311	-0.0006
11	SLU 24	0	0	0	0.0001	-0.0019	0
11	SLU 25	0	0	0	0.0003	0.0311	-0.0006
11	SLU 26	0	0	0	0	-0.0026	0.0002
11	SLU 27	0	0	0	0.0002	0.0304	-0.0004
11	SLU 28	0	0	0	0	-0.0026	0.0002
11	SLU 29	0	0	0	0.0002	0.0304	-0.0004
11	SLU 30	0	0	0	0	-0.0023	0.0002
11	SLU 31	0	0	0	0.0002	0.0307	-0.0004
11	SLU 32	0	0	0	0	-0.0023	0.0001
11	SLU 33	0	0	0	0.0002	0.0307	-0.0004
11	SLU 34	0	0	0	0.0001	-0.0024	-0.0001
11	SLU 35	0	0	0	0.0004	0.0416	-0.0009
11	SLU 36	0	0	0	0.0004	0.0416	-0.0009
11	SLU 37	0	0	0	0.0001	-0.0024	-0.0002
11	SLU 38	0	0	0	0.0004	0.0306	-0.0008
11	SLU 39	0	0	0	0.0004	0.0419	-0.0009
11	SLU 40	0	0	0	0.0004	0.0419	-0.0009
11	SLU 41	0	0	0	0.0001	-0.0021	-0.0002
11	SLU 42	0	0	0	0.0004	0.0309	-0.0008
11	SLU 43	0	0	0	0.0001	-0.0018	-0.0002
11	SLU 44	0	0	0	0.0004	0.0311	-0.0007
11	SLU 45	0	0	0	0.0001	-0.0018	-0.0002
11	SLU 46	0	0	0	0.0004	0.0311	-0.0008
11	SLU 47	0	0	0	0.0004	0.0415	-0.0008
11	SLU 48	0	0	0	0.0004	0.0415	-0.0008
11	SLU 49	0	0	0	0.0001	-0.0025	0
11	SLU 50	0	0	0	0.0003	0.0305	-0.0006
11	SLU 51	0	0	0	0.0004	0.0418	-0.0008
11	SLU 52	0	0	0	0.0004	0.0418	-0.0008
11	SLU 53	0	0	0	0.0001	-0.0022	-0.0001
11	SLU 54	0	0	0	0.0003	0.0308	-0.0006
11	SLU 55	0	0	0	0.0001	-0.0019	0
11	SLU 56	0	0	0	0.0003	0.0311	-0.0006
11	SLU 57	0	0	0	0.0001	-0.0019	0
11	SLU 58	0	0	0	0.0003	0.0311	-0.0006
11	SLU 59	0	0	0	0	-0.0026	0.0002
11	SLU 60	0	0	0	0.0002	0.0304	-0.0004
11	SLU 61	0	0	0	0	-0.0026	0.0002
11	SLU 62	0	0	0	0.0002	0.0304	-0.0004
11	SLU 63	0	0	0	0	-0.0023	0.0002
11	SLU 64	0	0	0	0.0002	0.0307	-0.0004
11	SLU 65	0	0	0	0	-0.0023	0.0001
11	SLU 66	0	0	0	0.0002	0.0307	-0.0004
11	SLU 67	0	0	0	0.0001	-0.0031	-0.0002
11	SLU 68	0	0	0	0.0005	0.0409	-0.001
11	SLU 69	0	0	0	0.0005	0.0409	-0.001
11	SLU 70	0	0	0	0.0001	-0.0031	-0.0002
11	SLU 71	0	0	0	0.0004	0.0299	-0.0008

Nodo	Cont.	Spostamento			Rotazione		
Ind.	N.br.	ux	uy	uz	rx	ry	rz
11	SLU 72	0	0	0	0.0005	0.0411	-0.001
11	SLU 73	0	0	0	0.0005	0.0411	-0.001
11	SLU 74	0	0	0	0.0001	-0.0028	-0.0002
11	SLU 75	0	0	0	0.0004	0.0301	-0.0008
11	SLU 76	0	0	0	0.0001	-0.0025	-0.0002
11	SLU 77	0	0	0	0.0004	0.0304	-0.0008
11	SLU 78	0	0	0	0.0001	-0.0025	-0.0002
11	SLU 79	0	0	0	0.0004	0.0304	-0.0008
11	SLU 80	0	0	0	0.0004	0.0408	-0.0008
11	SLU 81	0	0	0	0.0004	0.0408	-0.0008
11	SLU 82	0	0	0	0.0001	-0.0032	-0.0001
11	SLU 83	0	0	0	0.0003	0.0298	-0.0007
11	SLU 84	0	0	0	0.0004	0.0411	-0.0008
11	SLU 85	0	0	0	0.0004	0.0411	-0.0009
11	SLU 86	0	0	0	0.0001	-0.0029	-0.0001
11	SLU 87	0	0	0	0.0004	0.0301	-0.0007
11	SLU 88	0	0	0	0.0001	-0.0026	-0.0001
11	SLU 89	0	0	0	0.0003	0.0303	-0.0007
11	SLU 90	0	0	0	0.0001	-0.0026	-0.0001
11	SLU 91	0	0	0	0.0003	0.0303	-0.0007
11	SLU 92	0	0	0	0	-0.0033	0.0001
11	SLU 93	0	0	0	0.0003	0.0297	-0.0005
11	SLU 94	0	0	0	0	-0.0033	0.0001
11	SLU 95	0	0	0	0.0003	0.0297	-0.0005
11	SLU 96	0	0	0	0	-0.003	0.0001
11	SLU 97	0	0	0	0.0003	0.03	-0.0005
11	SLU 98	0	0	0	0	-0.003	0.0001
11	SLU 99	0	0	0	0.0003	0.03	-0.0005
11	SLU 100	0	0	0	0.0001	-0.0031	-0.0002
11	SLU 101	0	0	0	0.0005	0.0409	-0.001
11	SLU 102	0	0	0	0.0005	0.0409	-0.001
11	SLU 103	0	0	0	0.0001	-0.0031	-0.0002
11	SLU 104	0	0	0	0.0004	0.0299	-0.0008
11	SLU 105	0	0	0	0.0005	0.0411	-0.001
11	SLU 106	0	0	0	0.0005	0.0411	-0.001
11	SLU 107	0	0	0	0.0001	-0.0028	-0.0002
11	SLU 108	0	0	0	0.0004	0.0301	-0.0008
11	SLU 109	0	0	0	0.0001	-0.0025	-0.0002
11	SLU 110	0	0	0	0.0004	0.0304	-0.0008
11	SLU 111	0	0	0	0.0001	-0.0025	-0.0002
11	SLU 112	0	0	0	0.0004	0.0304	-0.0008
11	SLU 113	0	0	0	0.0004	0.0408	-0.0008
11	SLU 114	0	0	0	0.0004	0.0408	-0.0008
11	SLU 115	0	0	0	0.0001	-0.0032	-0.0001
11	SLU 116	0	0	0	0.0003	0.0298	-0.0007
11	SLU 117	0	0	0	0.0004	0.0411	-0.0008
11	SLU 118	0	0	0	0.0004	0.0411	-0.0009
11	SLU 119	0	0	0	0.0001	-0.0029	-0.0001
11	SLU 120	0	0	0	0.0004	0.0301	-0.0007
11	SLU 121	0	0	0	0.0001	-0.0026	-0.0001
11	SLU 122	0	0	0	0.0003	0.0303	-0.0007
11	SLU 123	0	0	0	0.0001	-0.0026	-0.0001
11	SLU 124	0	0	0	0.0003	0.0303	-0.0007
11	SLU 125	0	0	0	0	-0.0033	0.0001
11	SLU 126	0	0	0	0.0003	0.0297	-0.0005
11	SLU 127	0	0	0	0	-0.0033	0.0001
11	SLU 128	0	0	0	0.0003	0.0297	-0.0005
11	SLU 129	0	0	0	0	-0.003	0.0001
11	SLU 130	0	0	0	0.0003	0.03	-0.0005
11	SLU 131	0	0	0	0	-0.003	0.0001
11	SLU 132	0	0	0	0.0003	0.03	-0.0005
11	SLE RA 1	0	0	0	0.0001	-0.0024	-0.0001
11	SLE RA 2	0	0	0	0.0003	0.0269	-0.0007
11	SLE RA 3	0	0	0	0.0003	0.0269	-0.0007
11	SLE RA 4	0	0	0	0.0001	-0.0024	-0.0002
11	SLE RA 5	0	0	0	0.0003	0.0196	-0.0005
11	SLE RA 6	0	0	0	0.0003	0.0271	-0.0007
11	SLE RA 7	0	0	0	0.0003	0.0271	-0.0007
11	SLE RA 8	0	0	0	0.0001	-0.0022	-0.0002
11	SLE RA 9	0	0	0	0.0003	0.0198	-0.0006
11	SLE RA 10	0	0	0	0.0001	-0.002	-0.0002
11	SLE RA 11	0	0	0	0.0003	0.02	-0.0005
11	SLE RA 12	0	0	0	0.0001	-0.002	-0.0002
11	SLE RA 13	0	0	0	0.0003	0.02	-0.0006
11	SLE RA 14	0	0	0	0.0003	0.0269	-0.0006
11	SLE RA 15	0	0	0	0.0003	0.0269	-0.0006
11	SLE RA 16	0	0	0	0.0001	-0.0024	-0.0001
11	SLE RA 17	0	0	0	0.0002	0.0196	-0.0005
11	SLE RA 18	0	0	0	0.0003	0.0271	-0.0006
11	SLE RA 19	0	0	0	0.0003	0.0271	-0.0006
11	SLE RA 20	0	0	0	0.0001	-0.0022	-0.0001
11	SLE RA 21	0	0	0	0.0002	0.0197	-0.0005
11	SLE RA 22	0	0	0	0.0001	-0.0021	-0.0001
11	SLE RA 23	0	0	0	0.0002	0.0199	-0.0005
11	SLE RA 24	0	0	0	0.0001	-0.0021	-0.0001
11	SLE RA 25	0	0	0	0.0002	0.0199	-0.0005
11	SLE RA 26	0	0	0	0	-0.0025	0.0001
11	SLE RA 27	0	0	0	0.0002	0.0195	-0.0003
11	SLE RA 28	0	0	0	0	-0.0025	0.0001
11	SLE RA 29	0	0	0	0.0002	0.0195	-0.0003
11	SLE RA 30	0	0	0	0	-0.0023	0.0001
11	SLE RA 31	0	0	0	0.0002	0.0197	-0.0003
11	SLE RA 32	0	0	0	0	-0.0023	0.0001
11	SLE RA 33	0	0	0	0.0002	0.0197	-0.0003
11	SLE FR 1	0	0	0	0.0001	-0.0024	-0.0001

Nodo	Cont.	Spostamento			Rotazione		
Ind.	N.br.	ux	uy	uz	rx	ry	rz
11	SLE FR 2	0	0	0	0.0003	0.0196	-0.0005
11	SLE FR 3	0	0	0	0.0001	-0.0024	-0.0001
11	SLE FR 4	0	0	0	0.0001	-0.0023	-0.0001
11	SLE FR 5	0	0	0	0.0001	-0.0024	-0.0001
11	SLE QP 1	0	0	0	0.0001	-0.0024	-0.0001
11	SLO 1	0	0	0	-0.0937	-0.0085	0.2191
11	SLO 2	0	0	0	-0.0937	-0.0085	0.2191
11	SLO 3	0	0	0	0.0939	-0.0085	-0.2194
11	SLO 4	0	0	0	0.0939	-0.0085	-0.2194
11	SLO 5	0	0	0	-0.3125	-0.0042	0.7308
11	SLO 6	0	0	0	-0.3125	-0.0042	0.7308
11	SLO 7	0	0	0	0.3127	-0.0042	-0.7311
11	SLO 8	0	0	0	0.3127	-0.0042	-0.7311
11	SLO 9	0	0	0	-0.3125	-0.0006	0.7308
11	SLO 10	0	0	0	-0.3125	-0.0006	0.7308
11	SLO 11	0	0	0	0.3127	-0.0006	-0.7311
11	SLO 12	0	0	0	0.3127	-0.0006	-0.7311
11	SLO 13	0	0	0	-0.0937	0.0037	0.2191
11	SLO 14	0	0	0	-0.0937	0.0037	0.2191
11	SLO 15	0	0	0	0.0939	0.0037	-0.2194
11	SLO 16	0	0	0	0.0939	0.0037	-0.2194
11	SLD 1	0	0	0	-0.0866	-0.0074	0.2025
11	SLD 2	0	0	0	-0.0866	-0.0074	0.2025
11	SLD 3	0	0	0	0.0868	-0.0074	-0.2027
11	SLD 4	0	0	0	0.0868	-0.0074	-0.2027
11	SLD 5	0	0	0	-0.2888	-0.0039	0.6752
11	SLD 6	0	0	0	-0.2888	-0.0039	0.6752
11	SLD 7	0	0	0	0.289	-0.0039	-0.6755
11	SLD 8	0	0	0	0.289	-0.0039	-0.6755
11	SLD 9	0	0	0	-0.2888	-0.0009	0.6752
11	SLD 10	0	0	0	-0.2888	-0.0009	0.6752
11	SLD 11	0	0	0	0.289	-0.0009	-0.6755
11	SLD 12	0	0	0	0.289	-0.0009	-0.6755
11	SLD 13	0	0	0	-0.0866	0.0026	0.2025
11	SLD 14	0	0	0	-0.0866	0.0026	0.2025
11	SLD 15	0	0	0	0.0868	0.0026	-0.2027
11	SLD 16	0	0	0	0.0868	0.0026	-0.2027
11	SLV 1	0	0	0	-0.2285	-0.0131	0.5343
11	SLV 2	0	0	0	-0.2285	-0.0131	0.5343
11	SLV 3	0	0	0	0.2287	-0.0131	-0.5345
11	SLV 4	0	0	0	0.2287	-0.0131	-0.5345
11	SLV 5	0	0	0	-0.7618	-0.0056	1.7812
11	SLV 6	0	0	0	-0.7618	-0.0056	1.7812
11	SLV 7	0	0	0	0.762	-0.0056	-1.7815
11	SLV 8	0	0	0	0.762	-0.0056	-1.7815
11	SLV 9	0	0	0	-0.7618	0.0009	1.7812
11	SLV 10	0	0	0	-0.7618	0.0009	1.7812
11	SLV 11	0	0	0	0.762	0.0009	-1.7814
11	SLV 12	0	0	0	0.762	0.0009	-1.7814
11	SLV 13	0	0	0	-0.2285	0.0084	0.5343
11	SLV 14	0	0	0	-0.2285	0.0084	0.5343
11	SLV 15	0	0	0	0.2287	0.0084	-0.5345
11	SLV 16	0	0	0	0.2287	0.0084	-0.5345
12	SLU 1	0	0	0	0	0.0024	0
12	SLU 2	0	0	0	0.0003	-0.0543	0.0007
12	SLU 3	0	0	0	0.0003	-0.0543	0.0007
12	SLU 4	0	0	0	0	0.0024	0
12	SLU 5	0	0	0	0.0002	-0.0401	0.0005
12	SLU 6	0	0	0	0.0003	-0.0547	0.0007
12	SLU 7	0	0	0	0.0003	-0.0547	0.0007
12	SLU 8	0	0	0	0	0.0019	0
12	SLU 9	0	0	0	0.0002	-0.0406	0.0005
12	SLU 10	0	0	0	0	0.0014	0
12	SLU 11	0	0	0	0.0002	-0.0411	0.0005
12	SLU 12	0	0	0	0	0.0014	0
12	SLU 13	0	0	0	0.0002	-0.0411	0.0005
12	SLU 14	0	0	0	0.0002	-0.0544	0.0005
12	SLU 15	0	0	0	0.0002	-0.0544	0.0005
12	SLU 16	0	0	0	0	0.0023	-0.0001
12	SLU 17	0	0	0	0.0002	-0.0402	0.0004
12	SLU 18	0	0	0	0.0002	-0.0549	0.0005
12	SLU 19	0	0	0	0.0002	-0.0549	0.0005
12	SLU 20	0	0	0	0	0.0018	-0.0001
12	SLU 21	0	0	0	0.0002	-0.0407	0.0004
12	SLU 22	0	0	0	-0.0001	0.0013	-0.0001
12	SLU 23	0	0	0	0.0002	-0.0412	0.0004
12	SLU 24	0	0	0	0	0.0013	-0.0001
12	SLU 25	0	0	0	0.0002	-0.0412	0.0004
12	SLU 26	0	0	0	-0.0002	0.0021	-0.0004
12	SLU 27	0	0	0	0.0001	-0.0404	0.0001
12	SLU 28	0	0	0	-0.0001	0.0021	-0.0004
12	SLU 29	0	0	0	0.0001	-0.0404	0.0001
12	SLU 30	0	0	0	-0.0001	0.0016	-0.0004
12	SLU 31	0	0	0	0.0001	-0.0409	0.0001
12	SLU 32	0	0	0	-0.0001	0.0016	-0.0004
12	SLU 33	0	0	0	0.0001	-0.0409	0.0001
12	SLU 34	0	0	0	0	0.0024	0
12	SLU 35	0	0	0	0.0003	-0.0543	0.0007
12	SLU 36	0	0	0	0.0003	-0.0543	0.0007
12	SLU 37	0	0	0	0	0.0024	0
12	SLU 38	0	0	0	0.0002	-0.0401	0.0005
12	SLU 39	0	0	0	0.0003	-0.0547	0.0007
12	SLU 40	0	0	0	0.0003	-0.0547	0.0007
12	SLU 41	0	0	0	0	0.0019	0
12	SLU 42	0	0	0	0.0002	-0.0406	0.0005

Nodo	Cont.	Spostamento			Rotazione		
Ind.	N.br.	ux	uy	uz	rx	ry	rz
12	SLU 43	0	0	0	0	0.0014	0
12	SLU 44	0	0	0	0.0002	-0.0411	0.0005
12	SLU 45	0	0	0	0	0.0014	0
12	SLU 46	0	0	0	0.0002	-0.0411	0.0005
12	SLU 47	0	0	0	0.0002	-0.0544	0.0005
12	SLU 48	0	0	0	0.0002	-0.0544	0.0005
12	SLU 49	0	0	0	0	0.0023	-0.0001
12	SLU 50	0	0	0	0.0002	-0.0402	0.0004
12	SLU 51	0	0	0	0.0002	-0.0549	0.0005
12	SLU 52	0	0	0	0.0002	-0.0549	0.0005
12	SLU 53	0	0	0	0	0.0018	-0.0001
12	SLU 54	0	0	0	0.0002	-0.0407	0.0004
12	SLU 55	0	0	0	-0.0001	0.0013	-0.0001
12	SLU 56	0	0	0	0.0002	-0.0412	0.0004
12	SLU 57	0	0	0	0	0.0013	-0.0001
12	SLU 58	0	0	0	0.0002	-0.0412	0.0004
12	SLU 59	0	0	0	-0.0002	0.0021	-0.0004
12	SLU 60	0	0	0	0.0001	-0.0404	0.0001
12	SLU 61	0	0	0	-0.0001	0.0021	-0.0004
12	SLU 62	0	0	0	0.0001	-0.0404	0.0001
12	SLU 63	0	0	0	-0.0001	0.0016	-0.0004
12	SLU 64	0	0	0	0.0001	-0.0409	0.0001
12	SLU 65	0	0	0	-0.0001	0.0016	-0.0004
12	SLU 66	0	0	0	0.0001	-0.0409	0.0001
12	SLU 67	0	0	0	0	0.0031	0
12	SLU 68	0	0	0	0.0003	-0.0535	0.0007
12	SLU 69	0	0	0	0.0003	-0.0535	0.0007
12	SLU 70	0	0	0	0	0.0031	0
12	SLU 71	0	0	0	0.0002	-0.0394	0.0005
12	SLU 72	0	0	0	0.0003	-0.054	0.0007
12	SLU 73	0	0	0	0.0003	-0.054	0.0007
12	SLU 74	0	0	0	0	0.0026	0
12	SLU 75	0	0	0	0.0002	-0.0399	0.0005
12	SLU 76	0	0	0	0	0.0021	0
12	SLU 77	0	0	0	0.0002	-0.0404	0.0005
12	SLU 78	0	0	0	0	0.0021	0
12	SLU 79	0	0	0	0.0002	-0.0404	0.0005
12	SLU 80	0	0	0	0.0002	-0.0536	0.0005
12	SLU 81	0	0	0	0.0002	-0.0536	0.0005
12	SLU 82	0	0	0	0	0.003	-0.0001
12	SLU 83	0	0	0	0.0002	-0.0395	0.0004
12	SLU 84	0	0	0	0.0002	-0.0541	0.0005
12	SLU 85	0	0	0	0.0002	-0.0541	0.0005
12	SLU 86	0	0	0	0	0.0025	-0.0001
12	SLU 87	0	0	0	0.0002	-0.04	0.0004
12	SLU 88	0	0	0	-0.0001	0.002	-0.0001
12	SLU 89	0	0	0	0.0002	-0.0405	0.0004
12	SLU 90	0	0	0	0	0.002	-0.0001
12	SLU 91	0	0	0	0.0002	-0.0405	0.0004
12	SLU 92	0	0	0	-0.0002	0.0028	-0.0004
12	SLU 93	0	0	0	0.0001	-0.0397	0.0001
12	SLU 94	0	0	0	-0.0001	0.0028	-0.0004
12	SLU 95	0	0	0	0.0001	-0.0397	0.0001
12	SLU 96	0	0	0	-0.0001	0.0023	-0.0004
12	SLU 97	0	0	0	0.0001	-0.0401	0.0001
12	SLU 98	0	0	0	-0.0001	0.0023	-0.0004
12	SLU 99	0	0	0	0.0001	-0.0401	0.0001
12	SLU 100	0	0	0	0	0.0031	0
12	SLU 101	0	0	0	0.0003	-0.0535	0.0007
12	SLU 102	0	0	0	0.0003	-0.0535	0.0007
12	SLU 103	0	0	0	0	0.0031	0
12	SLU 104	0	0	0	0.0002	-0.0394	0.0005
12	SLU 105	0	0	0	0.0003	-0.054	0.0007
12	SLU 106	0	0	0	0.0003	-0.054	0.0007
12	SLU 107	0	0	0	0	0.0026	0
12	SLU 108	0	0	0	0.0002	-0.0399	0.0005
12	SLU 109	0	0	0	0	0.0021	0
12	SLU 110	0	0	0	0.0002	-0.0404	0.0005
12	SLU 111	0	0	0	0	0.0021	0
12	SLU 112	0	0	0	0.0002	-0.0404	0.0005
12	SLU 113	0	0	0	0.0002	-0.0536	0.0005
12	SLU 114	0	0	0	0.0002	-0.0536	0.0005
12	SLU 115	0	0	0	0	0.003	-0.0001
12	SLU 116	0	0	0	0.0002	-0.0395	0.0004
12	SLU 117	0	0	0	0.0002	-0.0541	0.0005
12	SLU 118	0	0	0	0.0002	-0.0541	0.0005
12	SLU 119	0	0	0	0	0.0025	-0.0001
12	SLU 120	0	0	0	0.0002	-0.04	0.0004
12	SLU 121	0	0	0	-0.0001	0.002	-0.0001
12	SLU 122	0	0	0	0.0002	-0.0405	0.0004
12	SLU 123	0	0	0	0	0.002	-0.0001
12	SLU 124	0	0	0	0.0002	-0.0405	0.0004
12	SLU 125	0	0	0	-0.0002	0.0028	-0.0004
12	SLU 126	0	0	0	0.0001	-0.0397	0.0001
12	SLU 127	0	0	0	-0.0001	0.0028	-0.0004
12	SLU 128	0	0	0	0.0001	-0.0397	0.0001
12	SLU 129	0	0	0	-0.0001	0.0023	-0.0004
12	SLU 130	0	0	0	0.0001	-0.0401	0.0001
12	SLU 131	0	0	0	-0.0001	0.0023	-0.0004
12	SLU 132	0	0	0	0.0001	-0.0401	0.0001
12	SLE RA 1	0	0	0	0	0.0024	0
12	SLE RA 2	0	0	0	0.0002	-0.0354	0.0004
12	SLE RA 3	0	0	0	0.0002	-0.0354	0.0005
12	SLE RA 4	0	0	0	0	0.0024	0
12	SLE RA 5	0	0	0	0.0001	-0.0259	0.0004

Nodo	Cont.	Spostamento			Rotazione		
Ind.	N.br.	ux	uy	uz	rx	ry	rz
12	SLE RA 6	0	0	0	0.0002	-0.0357	0.0005
12	SLE RA 7	0	0	0	0.0002	-0.0357	0.0005
12	SLE RA 8	0	0	0	0	0.002	0
12	SLE RA 9	0	0	0	0.0002	-0.0263	0.0004
12	SLE RA 10	0	0	0	0	0.0017	0
12	SLE RA 11	0	0	0	0.0001	-0.0266	0.0003
12	SLE RA 12	0	0	0	0	0.0017	0
12	SLE RA 13	0	0	0	0.0001	-0.0266	0.0004
12	SLE RA 14	0	0	0	0.0001	-0.0354	0.0003
12	SLE RA 15	0	0	0	0.0002	-0.0354	0.0004
12	SLE RA 16	0	0	0	0	0.0023	-0.0001
12	SLE RA 17	0	0	0	0.0001	-0.026	0.0003
12	SLE RA 18	0	0	0	0.0001	-0.0358	0.0004
12	SLE RA 19	0	0	0	0.0002	-0.0358	0.0004
12	SLE RA 20	0	0	0	0	0.002	-0.0001
12	SLE RA 21	0	0	0	0.0001	-0.0263	0.0003
12	SLE RA 22	0	0	0	0	0.0016	-0.0001
12	SLE RA 23	0	0	0	0.0001	-0.0267	0.0002
12	SLE RA 24	0	0	0	0	0.0016	-0.0001
12	SLE RA 25	0	0	0	0.0001	-0.0267	0.0003
12	SLE RA 26	0	0	0	-0.0001	0.0022	-0.0003
12	SLE RA 27	0	0	0	0	-0.0261	0.0001
12	SLE RA 28	0	0	0	-0.0001	0.0022	-0.0002
12	SLE RA 29	0	0	0	0	-0.0261	0.0001
12	SLE RA 30	0	0	0	-0.0001	0.0019	-0.0002
12	SLE RA 31	0	0	0	0	-0.0264	0.0001
12	SLE RA 32	0	0	0	-0.0001	0.0019	-0.0002
12	SLE RA 33	0	0	0	0	-0.0264	0.0001
12	SLE FR 1	0	0	0	0	0.0024	0
12	SLE FR 2	0	0	0	0.0001	-0.0259	0.0003
12	SLE FR 3	0	0	0	0	0.0024	0
12	SLE FR 4	0	0	0	0	0.0022	0
12	SLE FR 5	0	0	0	0	0.0023	-0.0001
12	SLE QP 1	0	0	0	0	0.0024	0
12	SLO 1	0	0	0	-0.0938	-0.0037	-0.2193
12	SLO 2	0	0	0	-0.0938	-0.0037	-0.2193
12	SLO 3	0	0	0	0.0938	-0.0037	0.2193
12	SLO 4	0	0	0	0.0938	-0.0037	0.2193
12	SLO 5	0	0	0	-0.3126	0.0006	-0.7309
12	SLO 6	0	0	0	-0.3126	0.0006	-0.7309
12	SLO 7	0	0	0	0.3126	0.0006	0.7309
12	SLO 8	0	0	0	0.3126	0.0006	0.7309
12	SLO 9	0	0	0	-0.3126	0.0042	-0.7309
12	SLO 10	0	0	0	-0.3126	0.0042	-0.7309
12	SLO 11	0	0	0	0.3126	0.0042	0.7309
12	SLO 12	0	0	0	0.3126	0.0042	0.7309
12	SLO 13	0	0	0	-0.0938	0.0085	-0.2193
12	SLO 14	0	0	0	-0.0938	0.0085	-0.2193
12	SLO 15	0	0	0	0.0938	0.0085	0.2193
12	SLO 16	0	0	0	0.0938	0.0085	0.2193
12	SLD 1	0	0	0	-0.0867	-0.0026	-0.2026
12	SLD 2	0	0	0	-0.0867	-0.0026	-0.2026
12	SLD 3	0	0	0	0.0867	-0.0026	0.2026
12	SLD 4	0	0	0	0.0867	-0.0026	0.2026
12	SLD 5	0	0	0	-0.2889	0.0009	-0.6754
12	SLD 6	0	0	0	-0.2889	0.0009	-0.6754
12	SLD 7	0	0	0	0.2889	0.0009	0.6754
12	SLD 8	0	0	0	0.2889	0.0009	0.6754
12	SLD 9	0	0	0	-0.2889	0.0039	-0.6754
12	SLD 10	0	0	0	-0.2889	0.0039	-0.6754
12	SLD 11	0	0	0	0.2889	0.0039	0.6754
12	SLD 12	0	0	0	0.2889	0.0039	0.6754
12	SLD 13	0	0	0	-0.0867	0.0074	-0.2026
12	SLD 14	0	0	0	-0.0867	0.0074	-0.2026
12	SLD 15	0	0	0	0.0867	0.0074	0.2026
12	SLD 16	0	0	0	0.0867	0.0074	0.2026
12	SLV 1	0	0	0	-0.2286	-0.0084	-0.5344
12	SLV 2	0	0	0	-0.2286	-0.0084	-0.5344
12	SLV 3	0	0	0	0.2286	-0.0084	0.5344
12	SLV 4	0	0	0	0.2286	-0.0084	0.5344
12	SLV 5	0	0	0	-0.7619	-0.0009	-1.7813
12	SLV 6	0	0	0	-0.7619	-0.0009	-1.7813
12	SLV 7	0	0	0	0.7619	-0.0009	1.7813
12	SLV 8	0	0	0	0.7619	-0.0009	1.7813
12	SLV 9	0	0	0	-0.7619	0.0056	-1.7813
12	SLV 10	0	0	0	-0.7619	0.0056	-1.7813
12	SLV 11	0	0	0	0.7619	0.0056	1.7813
12	SLV 12	0	0	0	0.7619	0.0056	1.7813
12	SLV 13	0	0	0	-0.2286	0.0131	-0.5344
12	SLV 14	0	0	0	-0.2286	0.0131	-0.5344
12	SLV 15	0	0	0	0.2286	0.0131	0.5344
12	SLV 16	0	0	0	0.2286	0.0131	0.5344
13	SLU 1	0	0	0	0	-0.0024	0
13	SLU 2	0	0	0	0.0003	0.0543	-0.0007
13	SLU 3	0	0	0	0.0003	0.0543	-0.0007
13	SLU 4	0	0	0	0	-0.0024	0
13	SLU 5	0	0	0	0.0002	0.0401	-0.0005
13	SLU 6	0	0	0	0.0003	0.0547	-0.0007
13	SLU 7	0	0	0	0.0003	0.0547	-0.0007
13	SLU 8	0	0	0	0	-0.0019	0
13	SLU 9	0	0	0	0.0002	0.0405	-0.0005
13	SLU 10	0	0	0	0	-0.0015	0
13	SLU 11	0	0	0	0.0002	0.041	-0.0005
13	SLU 12	0	0	0	0	-0.0015	0
13	SLU 13	0	0	0	0.0002	0.041	-0.0005

Nodo	Cont.	Spostamento			Rotazione		
Ind.	N.br.	ux	uy	uz	rx	ry	rz
13	SLU 14	0	0	0	0.0002	0.0543	-0.0005
13	SLU 15	0	0	0	0.0002	0.0543	-0.0005
13	SLU 16	0	0	0	-0.0001	-0.0024	0.0001
13	SLU 17	0	0	0	0.0002	0.0401	-0.0004
13	SLU 18	0	0	0	0.0002	0.0547	-0.0005
13	SLU 19	0	0	0	0.0002	0.0547	-0.0005
13	SLU 20	0	0	0	-0.0001	-0.0019	0.0001
13	SLU 21	0	0	0	0.0002	0.0405	-0.0004
13	SLU 22	0	0	0	-0.0001	-0.0015	0.0002
13	SLU 23	0	0	0	0.0001	0.041	-0.0003
13	SLU 24	0	0	0	-0.0001	-0.0015	0.0001
13	SLU 25	0	0	0	0.0002	0.041	-0.0004
13	SLU 26	0	0	0	-0.0002	-0.0024	0.0004
13	SLU 27	0	0	0	0	0.0401	-0.0001
13	SLU 28	0	0	0	-0.0002	-0.0024	0.0004
13	SLU 29	0	0	0	0.0001	0.0401	-0.0001
13	SLU 30	0	0	0	-0.0002	-0.0019	0.0004
13	SLU 31	0	0	0	0	0.0405	-0.0001
13	SLU 32	0	0	0	-0.0002	-0.0019	0.0004
13	SLU 33	0	0	0	0.0001	0.0405	-0.0001
13	SLU 34	0	0	0	0	-0.0024	0
13	SLU 35	0	0	0	0.0003	0.0543	-0.0007
13	SLU 36	0	0	0	0.0003	0.0543	-0.0007
13	SLU 37	0	0	0	0	-0.0024	0
13	SLU 38	0	0	0	0.0002	0.0401	-0.0005
13	SLU 39	0	0	0	0.0003	0.0547	-0.0007
13	SLU 40	0	0	0	0.0003	0.0547	-0.0007
13	SLU 41	0	0	0	0	-0.0019	0
13	SLU 42	0	0	0	0.0002	0.0405	-0.0005
13	SLU 43	0	0	0	0	-0.0015	0
13	SLU 44	0	0	0	0.0002	0.041	-0.0005
13	SLU 45	0	0	0	0	-0.0015	0
13	SLU 46	0	0	0	0.0002	0.041	-0.0005
13	SLU 47	0	0	0	0.0002	0.0543	-0.0005
13	SLU 48	0	0	0	0.0002	0.0543	-0.0005
13	SLU 49	0	0	0	-0.0001	-0.0024	0.0001
13	SLU 50	0	0	0	0.0002	0.0401	-0.0004
13	SLU 51	0	0	0	0.0002	0.0547	-0.0005
13	SLU 52	0	0	0	0.0002	0.0547	-0.0005
13	SLU 53	0	0	0	-0.0001	-0.0019	0.0001
13	SLU 54	0	0	0	0.0002	0.0405	-0.0004
13	SLU 55	0	0	0	-0.0001	-0.0015	0.0002
13	SLU 56	0	0	0	0.0001	0.041	-0.0003
13	SLU 57	0	0	0	-0.0001	-0.0015	0.0001
13	SLU 58	0	0	0	0.0002	0.041	-0.0004
13	SLU 59	0	0	0	-0.0002	-0.0024	0.0004
13	SLU 60	0	0	0	0	0.0401	-0.0001
13	SLU 61	0	0	0	-0.0002	-0.0024	0.0004
13	SLU 62	0	0	0	0.0001	0.0401	-0.0001
13	SLU 63	0	0	0	-0.0002	-0.0019	0.0004
13	SLU 64	0	0	0	0	0.0405	-0.0001
13	SLU 65	0	0	0	-0.0002	-0.0019	0.0004
13	SLU 66	0	0	0	0.0001	0.0405	-0.0001
13	SLU 67	0	0	0	0	-0.0031	0
13	SLU 68	0	0	0	0.0003	0.0535	-0.0007
13	SLU 69	0	0	0	0.0003	0.0535	-0.0007
13	SLU 70	0	0	0	0	-0.0031	0
13	SLU 71	0	0	0	0.0002	0.0394	-0.0005
13	SLU 72	0	0	0	0.0003	0.054	-0.0007
13	SLU 73	0	0	0	0.0003	0.054	-0.0007
13	SLU 74	0	0	0	0	-0.0027	0
13	SLU 75	0	0	0	0.0002	0.0398	-0.0005
13	SLU 76	0	0	0	0	-0.0022	0
13	SLU 77	0	0	0	0.0002	0.0402	-0.0005
13	SLU 78	0	0	0	0	-0.0022	0
13	SLU 79	0	0	0	0.0002	0.0402	-0.0005
13	SLU 80	0	0	0	0.0002	0.0535	-0.0005
13	SLU 81	0	0	0	0.0002	0.0535	-0.0005
13	SLU 82	0	0	0	-0.0001	-0.0031	0.0001
13	SLU 83	0	0	0	0.0002	0.0394	-0.0004
13	SLU 84	0	0	0	0.0002	0.054	-0.0005
13	SLU 85	0	0	0	0.0002	0.054	-0.0005
13	SLU 86	0	0	0	-0.0001	-0.0027	0.0001
13	SLU 87	0	0	0	0.0002	0.0398	-0.0004
13	SLU 88	0	0	0	-0.0001	-0.0022	0.0002
13	SLU 89	0	0	0	0.0001	0.0402	-0.0003
13	SLU 90	0	0	0	-0.0001	-0.0022	0.0001
13	SLU 91	0	0	0	0.0002	0.0402	-0.0004
13	SLU 92	0	0	0	-0.0002	-0.0031	0.0004
13	SLU 93	0	0	0	0	0.0394	-0.0001
13	SLU 94	0	0	0	-0.0002	-0.0031	0.0004
13	SLU 95	0	0	0	0.0001	0.0394	-0.0001
13	SLU 96	0	0	0	-0.0002	-0.0027	0.0004
13	SLU 97	0	0	0	0	0.0398	-0.0001
13	SLU 98	0	0	0	-0.0002	-0.0027	0.0004
13	SLU 99	0	0	0	0.0001	0.0398	-0.0001
13	SLU 100	0	0	0	0	-0.0031	0
13	SLU 101	0	0	0	0.0003	0.0535	-0.0007
13	SLU 102	0	0	0	0.0003	0.0535	-0.0007
13	SLU 103	0	0	0	0	-0.0031	0
13	SLU 104	0	0	0	0.0002	0.0394	-0.0005
13	SLU 105	0	0	0	0.0003	0.054	-0.0007
13	SLU 106	0	0	0	0.0003	0.054	-0.0007
13	SLU 107	0	0	0	0	-0.0027	0
13	SLU 108	0	0	0	0.0002	0.0398	-0.0005

Nodo	Cont.	Spostamento			Rotazione		
Ind.	N.br.	ux	uy	uz	rx	ry	rz
13	SLU 109	0	0	0	0	-0.0022	0
13	SLU 110	0	0	0	0.0002	0.0402	-0.0005
13	SLU 111	0	0	0	0	-0.0022	0
13	SLU 112	0	0	0	0.0002	0.0402	-0.0005
13	SLU 113	0	0	0	0.0002	0.0535	-0.0005
13	SLU 114	0	0	0	0.0002	0.0535	-0.0005
13	SLU 115	0	0	0	-0.0001	-0.0031	0.0001
13	SLU 116	0	0	0	0.0002	0.0394	-0.0004
13	SLU 117	0	0	0	0.0002	0.054	-0.0005
13	SLU 118	0	0	0	0.0002	0.054	-0.0005
13	SLU 119	0	0	0	-0.0001	-0.0027	0.0001
13	SLU 120	0	0	0	0.0002	0.0398	-0.0004
13	SLU 121	0	0	0	-0.0001	-0.0022	0.0002
13	SLU 122	0	0	0	0.0001	0.0402	-0.0003
13	SLU 123	0	0	0	-0.0001	-0.0022	0.0001
13	SLU 124	0	0	0	0.0002	0.0402	-0.0004
13	SLU 125	0	0	0	-0.0002	-0.0031	0.0004
13	SLU 126	0	0	0	0	0.0394	-0.0001
13	SLU 127	0	0	0	-0.0002	-0.0031	0.0004
13	SLU 128	0	0	0	0.0001	0.0394	-0.0001
13	SLU 129	0	0	0	-0.0002	-0.0027	0.0004
13	SLU 130	0	0	0	0	0.0398	-0.0001
13	SLU 131	0	0	0	-0.0002	-0.0027	0.0004
13	SLU 132	0	0	0	0.0001	0.0398	-0.0001
13	SLE RA 1	0	0	0	0	-0.0024	0
13	SLE RA 2	0	0	0	0.0002	0.0354	-0.0004
13	SLE RA 3	0	0	0	0.0002	0.0354	-0.0005
13	SLE RA 4	0	0	0	0	-0.0024	0
13	SLE RA 5	0	0	0	0.0001	0.0259	-0.0004
13	SLE RA 6	0	0	0	0.0002	0.0357	-0.0004
13	SLE RA 7	0	0	0	0.0002	0.0357	-0.0005
13	SLE RA 8	0	0	0	0	-0.0021	0
13	SLE RA 9	0	0	0	0.0001	0.0262	-0.0004
13	SLE RA 10	0	0	0	0	-0.0018	0
13	SLE RA 11	0	0	0	0.0001	0.0265	-0.0003
13	SLE RA 12	0	0	0	0	-0.0018	0
13	SLE RA 13	0	0	0	0.0001	0.0265	-0.0003
13	SLE RA 14	0	0	0	0.0001	0.0354	-0.0003
13	SLE RA 15	0	0	0	0.0001	0.0354	-0.0003
13	SLE RA 16	0	0	0	0	-0.0024	0.0001
13	SLE RA 17	0	0	0	0.0001	0.0259	-0.0002
13	SLE RA 18	0	0	0	0.0001	0.0357	-0.0003
13	SLE RA 19	0	0	0	0.0001	0.0357	-0.0003
13	SLE RA 20	0	0	0	0	-0.0021	0.0001
13	SLE RA 21	0	0	0	0.0001	0.0262	-0.0002
13	SLE RA 22	0	0	0	0	-0.0018	0.0001
13	SLE RA 23	0	0	0	0.0001	0.0265	-0.0002
13	SLE RA 24	0	0	0	0	-0.0018	0.0001
13	SLE RA 25	0	0	0	0.0001	0.0265	-0.0002
13	SLE RA 26	0	0	0	-0.0001	-0.0024	0.0003
13	SLE RA 27	0	0	0	0	0.0259	-0.0001
13	SLE RA 28	0	0	0	-0.0001	-0.0024	0.0003
13	SLE RA 29	0	0	0	0	0.0259	-0.0001
13	SLE RA 30	0	0	0	-0.0001	-0.0021	0.0003
13	SLE RA 31	0	0	0	0	0.0262	-0.0001
13	SLE RA 32	0	0	0	-0.0001	-0.0021	0.0003
13	SLE RA 33	0	0	0	0	0.0262	-0.0001
13	SLE FR 1	0	0	0	0	-0.0024	0
13	SLE FR 2	0	0	0	0.0001	0.0259	-0.0003
13	SLE FR 3	0	0	0	0	-0.0024	0
13	SLE FR 4	0	0	0	0	-0.0023	0
13	SLE FR 5	0	0	0	0	-0.0024	0.0001
13	SLE QP 1	0	0	0	0	-0.0024	0
13	SLO 1	0	0	0	-0.0938	-0.0085	0.2193
13	SLO 2	0	0	0	-0.0938	-0.0085	0.2193
13	SLO 3	0	0	0	0.0938	-0.0085	-0.2193
13	SLO 4	0	0	0	0.0938	-0.0085	-0.2193
13	SLO 5	0	0	0	-0.3126	-0.0042	0.7309
13	SLO 6	0	0	0	-0.3126	-0.0042	0.7309
13	SLO 7	0	0	0	0.3126	-0.0042	-0.7309
13	SLO 8	0	0	0	0.3126	-0.0042	-0.7309
13	SLO 9	0	0	0	-0.3126	-0.0006	0.7309
13	SLO 10	0	0	0	-0.3126	-0.0006	0.7309
13	SLO 11	0	0	0	0.3126	-0.0006	-0.7309
13	SLO 12	0	0	0	0.3126	-0.0006	-0.7309
13	SLO 13	0	0	0	-0.0938	0.0037	0.2193
13	SLO 14	0	0	0	-0.0938	0.0037	0.2193
13	SLO 15	0	0	0	0.0938	0.0037	-0.2193
13	SLO 16	0	0	0	0.0938	0.0037	-0.2193
13	SLD 1	0	0	0	-0.0867	-0.0074	0.2026
13	SLD 2	0	0	0	-0.0867	-0.0074	0.2026
13	SLD 3	0	0	0	0.0867	-0.0074	-0.2026
13	SLD 4	0	0	0	0.0867	-0.0074	-0.2026
13	SLD 5	0	0	0	-0.2889	-0.0039	0.6754
13	SLD 6	0	0	0	-0.2889	-0.0039	0.6754
13	SLD 7	0	0	0	0.2889	-0.0039	-0.6754
13	SLD 8	0	0	0	0.2889	-0.0039	-0.6754
13	SLD 9	0	0	0	-0.2889	-0.0009	0.6754
13	SLD 10	0	0	0	-0.2889	-0.0009	0.6754
13	SLD 11	0	0	0	0.2889	-0.0009	-0.6754
13	SLD 12	0	0	0	0.2889	-0.0009	-0.6754
13	SLD 13	0	0	0	-0.0867	0.0026	0.2026
13	SLD 14	0	0	0	-0.0867	0.0026	0.2026
13	SLD 15	0	0	0	0.0867	0.0026	-0.2026
13	SLD 16	0	0	0	0.0867	0.0026	-0.2026

Nodo	Cont.	Spostamento			Rotazione		
Ind.	N.br.	ux	uy	uz	rx	ry	rz
13	SLV 1	0	0	0	-0.2286	-0.0131	0.5344
13	SLV 2	0	0	0	-0.2286	-0.0131	0.5344
13	SLV 3	0	0	0	0.2286	-0.0131	-0.5344
13	SLV 4	0	0	0	0.2286	-0.0131	-0.5344
13	SLV 5	0	0	0	-0.7619	-0.0056	1.7813
13	SLV 6	0	0	0	-0.7619	-0.0056	1.7813
13	SLV 7	0	0	0	0.7619	-0.0056	-1.7813
13	SLV 8	0	0	0	0.7619	-0.0056	-1.7813
13	SLV 9	0	0	0	-0.7619	0.0009	1.7813
13	SLV 10	0	0	0	-0.7619	0.0009	1.7813
13	SLV 11	0	0	0	0.7619	0.0009	-1.7813
13	SLV 12	0	0	0	0.7619	0.0009	-1.7813
13	SLV 13	0	0	0	-0.2286	0.0084	0.5344
13	SLV 14	0	0	0	-0.2286	0.0084	0.5344
13	SLV 15	0	0	0	0.2286	0.0084	-0.5344
13	SLV 16	0	0	0	0.2286	0.0084	-0.5344
14	SLU 1	0	0	0	-0.0001	0.0024	-0.0001
14	SLU 2	0	0	0	-0.0003	-0.0669	-0.0006
14	SLU 3	0	0	0	-0.0003	-0.0669	-0.0006
14	SLU 4	0	0	0	-0.0001	0.0024	-0.0001
14	SLU 5	0	0	0	-0.0002	-0.0496	-0.0004
14	SLU 6	0	0	0	-0.0003	-0.0674	-0.0006
14	SLU 7	0	0	0	-0.0003	-0.0674	-0.0006
14	SLU 8	0	0	0	-0.0001	0.0018	-0.0001
14	SLU 9	0	0	0	-0.0002	-0.0501	-0.0004
14	SLU 10	0	0	0	-0.0001	0.0013	-0.0001
14	SLU 11	0	0	0	-0.0002	-0.0507	-0.0005
14	SLU 12	0	0	0	-0.0001	0.0013	-0.0001
14	SLU 13	0	0	0	-0.0002	-0.0507	-0.0005
14	SLU 14	0	0	0	-0.0003	-0.0669	-0.0007
14	SLU 15	0	0	0	-0.0003	-0.0669	-0.0007
14	SLU 16	0	0	0	-0.0001	0.0024	-0.0002
14	SLU 17	0	0	0	-0.0003	-0.0496	-0.0006
14	SLU 18	0	0	0	-0.0003	-0.0674	-0.0007
14	SLU 19	0	0	0	-0.0003	-0.0674	-0.0007
14	SLU 20	0	0	0	-0.0001	0.0018	-0.0002
14	SLU 21	0	0	0	-0.0003	-0.0501	-0.0006
14	SLU 22	0	0	0	-0.0002	0.0013	-0.0003
14	SLU 23	0	0	0	-0.0003	-0.0507	-0.0006
14	SLU 24	0	0	0	-0.0002	0.0013	-0.0003
14	SLU 25	0	0	0	-0.0003	-0.0507	-0.0006
14	SLU 26	0	0	0	-0.0003	0.0024	-0.0005
14	SLU 27	0	0	0	-0.0004	-0.0496	-0.0008
14	SLU 28	0	0	0	-0.0002	0.0024	-0.0005
14	SLU 29	0	0	0	-0.0004	-0.0496	-0.0008
14	SLU 30	0	0	0	-0.0003	0.0018	-0.0005
14	SLU 31	0	0	0	-0.0004	-0.0501	-0.0008
14	SLU 32	0	0	0	-0.0002	0.0018	-0.0005
14	SLU 33	0	0	0	-0.0004	-0.0501	-0.0008
14	SLU 34	0	0	0	-0.0001	0.0024	-0.0001
14	SLU 35	0	0	0	-0.0003	-0.0669	-0.0006
14	SLU 36	0	0	0	-0.0003	-0.0669	-0.0006
14	SLU 37	0	0	0	-0.0001	0.0024	-0.0001
14	SLU 38	0	0	0	-0.0002	-0.0496	-0.0004
14	SLU 39	0	0	0	-0.0003	-0.0674	-0.0006
14	SLU 40	0	0	0	-0.0003	-0.0674	-0.0006
14	SLU 41	0	0	0	-0.0001	0.0018	-0.0001
14	SLU 42	0	0	0	-0.0002	-0.0501	-0.0004
14	SLU 43	0	0	0	-0.0001	0.0013	-0.0001
14	SLU 44	0	0	0	-0.0002	-0.0507	-0.0005
14	SLU 45	0	0	0	-0.0001	0.0013	-0.0001
14	SLU 46	0	0	0	-0.0002	-0.0507	-0.0005
14	SLU 47	0	0	0	-0.0003	-0.0669	-0.0007
14	SLU 48	0	0	0	-0.0003	-0.0669	-0.0007
14	SLU 49	0	0	0	-0.0001	0.0024	-0.0002
14	SLU 50	0	0	0	-0.0003	-0.0496	-0.0006
14	SLU 51	0	0	0	-0.0003	-0.0674	-0.0007
14	SLU 52	0	0	0	-0.0003	-0.0674	-0.0007
14	SLU 53	0	0	0	-0.0001	0.0018	-0.0002
14	SLU 54	0	0	0	-0.0003	-0.0501	-0.0006
14	SLU 55	0	0	0	-0.0002	0.0013	-0.0003
14	SLU 56	0	0	0	-0.0003	-0.0507	-0.0006
14	SLU 57	0	0	0	-0.0002	0.0013	-0.0003
14	SLU 58	0	0	0	-0.0003	-0.0507	-0.0006
14	SLU 59	0	0	0	-0.0003	0.0024	-0.0005
14	SLU 60	0	0	0	-0.0004	-0.0496	-0.0008
14	SLU 61	0	0	0	-0.0002	0.0024	-0.0005
14	SLU 62	0	0	0	-0.0004	-0.0496	-0.0008
14	SLU 63	0	0	0	-0.0003	0.0018	-0.0005
14	SLU 64	0	0	0	-0.0004	-0.0501	-0.0008
14	SLU 65	0	0	0	-0.0002	0.0018	-0.0005
14	SLU 66	0	0	0	-0.0004	-0.0501	-0.0008
14	SLU 67	0	0	0	-0.0001	0.0031	-0.0002
14	SLU 68	0	0	0	-0.0003	-0.0662	-0.0006
14	SLU 69	0	0	0	-0.0003	-0.0662	-0.0006
14	SLU 70	0	0	0	-0.0001	0.0031	-0.0001
14	SLU 71	0	0	0	-0.0003	-0.0489	-0.0005
14	SLU 72	0	0	0	-0.0003	-0.0667	-0.0006
14	SLU 73	0	0	0	-0.0003	-0.0667	-0.0006
14	SLU 74	0	0	0	-0.0001	0.0026	-0.0001
14	SLU 75	0	0	0	-0.0003	-0.0494	-0.0005
14	SLU 76	0	0	0	-0.0001	0.002	-0.0002
14	SLU 77	0	0	0	-0.0003	-0.05	-0.0005
14	SLU 78	0	0	0	-0.0001	0.002	-0.0002
14	SLU 79	0	0	0	-0.0003	-0.05	-0.0005

Nodo	Cont.	Spostamento			Rotazione		
Ind.	N.br.	ux	uy	uz	rx	ry	rz
14	SLU 80	0	0	0	-0.0004	-0.0662	-0.0008
14	SLU 81	0	0	0	-0.0004	-0.0662	-0.0008
14	SLU 82	0	0	0	-0.0002	0.0031	-0.0003
14	SLU 83	0	0	0	-0.0003	-0.0489	-0.0006
14	SLU 84	0	0	0	-0.0004	-0.0667	-0.0008
14	SLU 85	0	0	0	-0.0004	-0.0667	-0.0008
14	SLU 86	0	0	0	-0.0002	0.0026	-0.0003
14	SLU 87	0	0	0	-0.0003	-0.0494	-0.0006
14	SLU 88	0	0	0	-0.0002	0.002	-0.0003
14	SLU 89	0	0	0	-0.0003	-0.05	-0.0007
14	SLU 90	0	0	0	-0.0002	0.002	-0.0003
14	SLU 91	0	0	0	-0.0003	-0.05	-0.0006
14	SLU 92	0	0	0	-0.0003	0.0031	-0.0005
14	SLU 93	0	0	0	-0.0004	-0.0489	-0.0009
14	SLU 94	0	0	0	-0.0003	0.0031	-0.0005
14	SLU 95	0	0	0	-0.0004	-0.0489	-0.0009
14	SLU 96	0	0	0	-0.0003	0.0026	-0.0005
14	SLU 97	0	0	0	-0.0004	-0.0494	-0.0009
14	SLU 98	0	0	0	-0.0003	0.0026	-0.0005
14	SLU 99	0	0	0	-0.0004	-0.0494	-0.0009
14	SLU 100	0	0	0	-0.0001	0.0031	-0.0002
14	SLU 101	0	0	0	-0.0003	-0.0662	-0.0006
14	SLU 102	0	0	0	-0.0003	-0.0662	-0.0006
14	SLU 103	0	0	0	-0.0001	0.0031	-0.0001
14	SLU 104	0	0	0	-0.0003	-0.0489	-0.0005
14	SLU 105	0	0	0	-0.0003	-0.0667	-0.0006
14	SLU 106	0	0	0	-0.0003	-0.0667	-0.0006
14	SLU 107	0	0	0	-0.0001	0.0026	-0.0001
14	SLU 108	0	0	0	-0.0003	-0.0494	-0.0005
14	SLU 109	0	0	0	-0.0001	0.002	-0.0002
14	SLU 110	0	0	0	-0.0003	-0.05	-0.0005
14	SLU 111	0	0	0	-0.0001	0.002	-0.0002
14	SLU 112	0	0	0	-0.0003	-0.05	-0.0005
14	SLU 113	0	0	0	-0.0004	-0.0662	-0.0008
14	SLU 114	0	0	0	-0.0004	-0.0662	-0.0008
14	SLU 115	0	0	0	-0.0002	0.0031	-0.0003
14	SLU 116	0	0	0	-0.0003	-0.0489	-0.0006
14	SLU 117	0	0	0	-0.0004	-0.0667	-0.0008
14	SLU 118	0	0	0	-0.0004	-0.0667	-0.0008
14	SLU 119	0	0	0	-0.0002	0.0026	-0.0003
14	SLU 120	0	0	0	-0.0003	-0.0494	-0.0006
14	SLU 121	0	0	0	-0.0002	0.002	-0.0003
14	SLU 122	0	0	0	-0.0003	-0.05	-0.0007
14	SLU 123	0	0	0	-0.0002	0.002	-0.0003
14	SLU 124	0	0	0	-0.0003	-0.05	-0.0006
14	SLU 125	0	0	0	-0.0003	0.0031	-0.0005
14	SLU 126	0	0	0	-0.0004	-0.0489	-0.0009
14	SLU 127	0	0	0	-0.0003	0.0031	-0.0005
14	SLU 128	0	0	0	-0.0004	-0.0489	-0.0009
14	SLU 129	0	0	0	-0.0003	0.0026	-0.0005
14	SLU 130	0	0	0	-0.0004	-0.0494	-0.0009
14	SLU 131	0	0	0	-0.0003	0.0026	-0.0005
14	SLU 132	0	0	0	-0.0004	-0.0494	-0.0009
14	SLE RA 1	0	0	0	-0.0001	0.0024	-0.0001
14	SLE RA 2	0	0	0	-0.0002	-0.0438	-0.0004
14	SLE RA 3	0	0	0	-0.0002	-0.0438	-0.0004
14	SLE RA 4	0	0	0	-0.0001	0.0024	-0.0001
14	SLE RA 5	0	0	0	-0.0002	-0.0323	-0.0003
14	SLE RA 6	0	0	0	-0.0002	-0.0442	-0.0004
14	SLE RA 7	0	0	0	-0.0002	-0.0442	-0.0004
14	SLE RA 8	0	0	0	-0.0001	0.002	-0.0001
14	SLE RA 9	0	0	0	-0.0002	-0.0326	-0.0003
14	SLE RA 10	0	0	0	-0.0001	0.0017	-0.0001
14	SLE RA 11	0	0	0	-0.0002	-0.033	-0.0004
14	SLE RA 12	0	0	0	-0.0001	0.0017	-0.0001
14	SLE RA 13	0	0	0	-0.0002	-0.033	-0.0003
14	SLE RA 14	0	0	0	-0.0003	-0.0438	-0.0005
14	SLE RA 15	0	0	0	-0.0003	-0.0438	-0.0005
14	SLE RA 16	0	0	0	-0.0001	0.0024	-0.0002
14	SLE RA 17	0	0	0	-0.0002	-0.0323	-0.0004
14	SLE RA 18	0	0	0	-0.0003	-0.0442	-0.0005
14	SLE RA 19	0	0	0	-0.0003	-0.0442	-0.0005
14	SLE RA 20	0	0	0	-0.0001	0.002	-0.0002
14	SLE RA 21	0	0	0	-0.0002	-0.0326	-0.0004
14	SLE RA 22	0	0	0	-0.0001	0.0017	-0.0002
14	SLE RA 23	0	0	0	-0.0002	-0.033	-0.0005
14	SLE RA 24	0	0	0	-0.0001	0.0017	-0.0002
14	SLE RA 25	0	0	0	-0.0002	-0.033	-0.0004
14	SLE RA 26	0	0	0	-0.0002	0.0024	-0.0004
14	SLE RA 27	0	0	0	-0.0003	-0.0323	-0.0006
14	SLE RA 28	0	0	0	-0.0002	0.0024	-0.0004
14	SLE RA 29	0	0	0	-0.0003	-0.0323	-0.0006
14	SLE RA 30	0	0	0	-0.0002	0.002	-0.0004
14	SLE RA 31	0	0	0	-0.0003	-0.0326	-0.0006
14	SLE RA 32	0	0	0	-0.0002	0.002	-0.0004
14	SLE RA 33	0	0	0	-0.0003	-0.0326	-0.0006
14	SLE FR 1	0	0	0	-0.0001	0.0024	-0.0001
14	SLE FR 2	0	0	0	-0.0002	-0.0323	-0.0004
14	SLE FR 3	0	0	0	-0.0001	0.0024	-0.0001
14	SLE FR 4	0	0	0	-0.0001	0.0022	-0.0001
14	SLE FR 5	0	0	0	-0.0001	0.0024	-0.0002
14	SLE QP 1	0	0	0	-0.0001	0.0024	-0.0001
14	SLO 1	0	0	0	-0.0939	-0.0037	-0.2194
14	SLO 2	0	0	0	-0.0939	-0.0037	-0.2194
14	SLO 3	0	0	0	0.0937	-0.0037	0.2191

Nodo	Cont.	Spostamento			Rotazione		
Ind.	N.br.	ux	uy	uz	rx	ry	rz
14	SLO 4	0	0	0	0.0937	-0.0037	0.2191
14	SLO 5	0	0	0	-0.3127	0.0006	-0.7311
14	SLO 6	0	0	0	-0.3127	0.0006	-0.7311
14	SLO 7	0	0	0	0.3125	0.0006	0.7308
14	SLO 8	0	0	0	0.3125	0.0006	0.7308
14	SLO 9	0	0	0	-0.3127	0.0042	-0.7311
14	SLO 10	0	0	0	-0.3127	0.0042	-0.7311
14	SLO 11	0	0	0	0.3125	0.0042	0.7308
14	SLO 12	0	0	0	0.3125	0.0042	0.7308
14	SLO 13	0	0	0	-0.0939	0.0085	-0.2194
14	SLO 14	0	0	0	-0.0939	0.0085	-0.2194
14	SLO 15	0	0	0	0.0937	0.0085	0.2191
14	SLO 16	0	0	0	0.0937	0.0085	0.2191
14	SLD 1	0	0	0	-0.0868	-0.0026	-0.2027
14	SLD 2	0	0	0	-0.0868	-0.0026	-0.2027
14	SLD 3	0	0	0	0.0866	-0.0026	0.2025
14	SLD 4	0	0	0	0.0866	-0.0026	0.2025
14	SLD 5	0	0	0	-0.289	0.0009	-0.6755
14	SLD 6	0	0	0	-0.289	0.0009	-0.6755
14	SLD 7	0	0	0	0.2888	0.0009	0.6752
14	SLD 8	0	0	0	0.2888	0.0009	0.6752
14	SLD 9	0	0	0	-0.289	0.0039	-0.6755
14	SLD 10	0	0	0	-0.289	0.0039	-0.6755
14	SLD 11	0	0	0	0.2888	0.0039	0.6752
14	SLD 12	0	0	0	0.2888	0.0039	0.6752
14	SLD 13	0	0	0	-0.0868	0.0074	-0.2027
14	SLD 14	0	0	0	-0.0868	0.0074	-0.2027
14	SLD 15	0	0	0	0.0866	0.0074	0.2025
14	SLD 16	0	0	0	0.0866	0.0074	0.2025
14	SLV 1	0	0	0	-0.2287	-0.0084	-0.5345
14	SLV 2	0	0	0	-0.2287	-0.0084	-0.5345
14	SLV 3	0	0	0	0.2285	-0.0084	0.5343
14	SLV 4	0	0	0	0.2285	-0.0084	0.5343
14	SLV 5	0	0	0	-0.762	-0.0009	-1.7814
14	SLV 6	0	0	0	-0.762	-0.0009	-1.7814
14	SLV 7	0	0	0	0.7618	-0.0009	1.7812
14	SLV 8	0	0	0	0.7618	-0.0009	1.7812
14	SLV 9	0	0	0	-0.762	0.0056	-1.7815
14	SLV 10	0	0	0	-0.762	0.0056	-1.7815
14	SLV 11	0	0	0	0.7618	0.0056	1.7812
14	SLV 12	0	0	0	0.7618	0.0056	1.7812
14	SLV 13	0	0	0	-0.2287	0.0131	-0.5345
14	SLV 14	0	0	0	-0.2287	0.0131	-0.5345
14	SLV 15	0	0	0	0.2285	0.0131	0.5343
14	SLV 16	0	0	0	0.2285	0.0131	0.5343
15	SLU 1	0	0	0	-0.0001	-0.0024	0.0001
15	SLU 2	0	0	0	-0.0003	0.0669	0.0006
15	SLU 3	0	0	0	-0.0003	0.0669	0.0006
15	SLU 4	0	0	0	-0.0001	-0.0024	0.0001
15	SLU 5	0	0	0	-0.0002	0.0496	0.0004
15	SLU 6	0	0	0	-0.0003	0.0674	0.0006
15	SLU 7	0	0	0	-0.0003	0.0674	0.0006
15	SLU 8	0	0	0	-0.0001	-0.0018	0.0001
15	SLU 9	0	0	0	-0.0002	0.0501	0.0004
15	SLU 10	0	0	0	-0.0001	-0.0013	0.0001
15	SLU 11	0	0	0	-0.0002	0.0507	0.0005
15	SLU 12	0	0	0	-0.0001	-0.0013	0.0001
15	SLU 13	0	0	0	-0.0002	0.0507	0.0005
15	SLU 14	0	0	0	-0.0004	0.0669	0.0007
15	SLU 15	0	0	0	-0.0003	0.0669	0.0007
15	SLU 16	0	0	0	-0.0001	-0.0024	0.0003
15	SLU 17	0	0	0	-0.0003	0.0496	0.0006
15	SLU 18	0	0	0	-0.0004	0.0674	0.0007
15	SLU 19	0	0	0	-0.0003	0.0674	0.0007
15	SLU 20	0	0	0	-0.0002	-0.0018	0.0003
15	SLU 21	0	0	0	-0.0003	0.0501	0.0006
15	SLU 22	0	0	0	-0.0002	-0.0013	0.0003
15	SLU 23	0	0	0	-0.0003	0.0507	0.0006
15	SLU 24	0	0	0	-0.0002	-0.0013	0.0003
15	SLU 25	0	0	0	-0.0003	0.0507	0.0006
15	SLU 26	0	0	0	-0.0003	-0.0024	0.0005
15	SLU 27	0	0	0	-0.0004	0.0496	0.0009
15	SLU 28	0	0	0	-0.0003	-0.0024	0.0005
15	SLU 29	0	0	0	-0.0004	0.0496	0.0008
15	SLU 30	0	0	0	-0.0003	-0.0018	0.0005
15	SLU 31	0	0	0	-0.0004	0.0501	0.0009
15	SLU 32	0	0	0	-0.0003	-0.0018	0.0005
15	SLU 33	0	0	0	-0.0004	0.0501	0.0008
15	SLU 34	0	0	0	-0.0001	-0.0024	0.0001
15	SLU 35	0	0	0	-0.0003	0.0669	0.0006
15	SLU 36	0	0	0	-0.0003	0.0669	0.0006
15	SLU 37	0	0	0	-0.0001	-0.0024	0.0001
15	SLU 38	0	0	0	-0.0002	0.0496	0.0004
15	SLU 39	0	0	0	-0.0003	0.0674	0.0006
15	SLU 40	0	0	0	-0.0003	0.0674	0.0006
15	SLU 41	0	0	0	-0.0001	-0.0018	0.0001
15	SLU 42	0	0	0	-0.0002	0.0501	0.0004
15	SLU 43	0	0	0	-0.0001	-0.0013	0.0001
15	SLU 44	0	0	0	-0.0002	0.0507	0.0005
15	SLU 45	0	0	0	-0.0001	-0.0013	0.0001
15	SLU 46	0	0	0	-0.0002	0.0507	0.0005
15	SLU 47	0	0	0	-0.0004	0.0669	0.0007
15	SLU 48	0	0	0	-0.0003	0.0669	0.0007
15	SLU 49	0	0	0	-0.0001	-0.0024	0.0003
15	SLU 50	0	0	0	-0.0003	0.0496	0.0006

Nodo	Cont.	Spostamento			Rotazione		
Ind.	N.br.	ux	uy	uz	rx	ry	rz
15	SLU 51	0	0	0	-0.0004	0.0674	0.0007
15	SLU 52	0	0	0	-0.0003	0.0674	0.0007
15	SLU 53	0	0	0	-0.0002	-0.0018	0.0003
15	SLU 54	0	0	0	-0.0003	0.0501	0.0006
15	SLU 55	0	0	0	-0.0002	-0.0013	0.0003
15	SLU 56	0	0	0	-0.0003	0.0507	0.0006
15	SLU 57	0	0	0	-0.0002	-0.0013	0.0003
15	SLU 58	0	0	0	-0.0003	0.0507	0.0006
15	SLU 59	0	0	0	-0.0003	-0.0024	0.0005
15	SLU 60	0	0	0	-0.0004	0.0496	0.0009
15	SLU 61	0	0	0	-0.0003	-0.0024	0.0005
15	SLU 62	0	0	0	-0.0004	0.0496	0.0008
15	SLU 63	0	0	0	-0.0003	-0.0018	0.0005
15	SLU 64	0	0	0	-0.0004	0.0501	0.0009
15	SLU 65	0	0	0	-0.0003	-0.0018	0.0005
15	SLU 66	0	0	0	-0.0004	0.0501	0.0008
15	SLU 67	0	0	0	-0.0001	-0.0031	0.0002
15	SLU 68	0	0	0	-0.0003	0.0662	0.0006
15	SLU 69	0	0	0	-0.0003	0.0662	0.0006
15	SLU 70	0	0	0	-0.0001	-0.0031	0.0001
15	SLU 71	0	0	0	-0.0003	0.0489	0.0005
15	SLU 72	0	0	0	-0.0003	0.0667	0.0006
15	SLU 73	0	0	0	-0.0003	0.0667	0.0006
15	SLU 74	0	0	0	-0.0001	-0.0026	0.0001
15	SLU 75	0	0	0	-0.0003	0.0494	0.0005
15	SLU 76	0	0	0	-0.0001	-0.002	0.0002
15	SLU 77	0	0	0	-0.0003	0.05	0.0005
15	SLU 78	0	0	0	-0.0001	-0.002	0.0002
15	SLU 79	0	0	0	-0.0003	0.05	0.0005
15	SLU 80	0	0	0	-0.0004	0.0662	0.0008
15	SLU 81	0	0	0	-0.0004	0.0662	0.0008
15	SLU 82	0	0	0	-0.0002	-0.0031	0.0003
15	SLU 83	0	0	0	-0.0003	0.0489	0.0006
15	SLU 84	0	0	0	-0.0004	0.0667	0.0008
15	SLU 85	0	0	0	-0.0004	0.0667	0.0008
15	SLU 86	0	0	0	-0.0002	-0.0026	0.0003
15	SLU 87	0	0	0	-0.0003	0.0494	0.0006
15	SLU 88	0	0	0	-0.0002	-0.002	0.0003
15	SLU 89	0	0	0	-0.0003	0.05	0.0007
15	SLU 90	0	0	0	-0.0002	-0.002	0.0003
15	SLU 91	0	0	0	-0.0003	0.05	0.0007
15	SLU 92	0	0	0	-0.0003	-0.0031	0.0006
15	SLU 93	0	0	0	-0.0004	0.0489	0.0009
15	SLU 94	0	0	0	-0.0003	-0.0031	0.0005
15	SLU 95	0	0	0	-0.0004	0.0489	0.0009
15	SLU 96	0	0	0	-0.0003	-0.0026	0.0006
15	SLU 97	0	0	0	-0.0004	0.0494	0.0009
15	SLU 98	0	0	0	-0.0003	-0.0026	0.0006
15	SLU 99	0	0	0	-0.0004	0.0494	0.0009
15	SLU 100	0	0	0	-0.0001	-0.0031	0.0002
15	SLU 101	0	0	0	-0.0003	0.0662	0.0006
15	SLU 102	0	0	0	-0.0003	0.0662	0.0006
15	SLU 103	0	0	0	-0.0001	-0.0031	0.0001
15	SLU 104	0	0	0	-0.0003	0.0489	0.0005
15	SLU 105	0	0	0	-0.0003	0.0667	0.0006
15	SLU 106	0	0	0	-0.0003	0.0667	0.0006
15	SLU 107	0	0	0	-0.0001	-0.0026	0.0001
15	SLU 108	0	0	0	-0.0003	0.0494	0.0005
15	SLU 109	0	0	0	-0.0001	-0.002	0.0002
15	SLU 110	0	0	0	-0.0003	0.05	0.0005
15	SLU 111	0	0	0	-0.0001	-0.002	0.0002
15	SLU 112	0	0	0	-0.0003	0.05	0.0005
15	SLU 113	0	0	0	-0.0004	0.0662	0.0008
15	SLU 114	0	0	0	-0.0004	0.0662	0.0008
15	SLU 115	0	0	0	-0.0002	-0.0031	0.0003
15	SLU 116	0	0	0	-0.0003	0.0489	0.0006
15	SLU 117	0	0	0	-0.0004	0.0667	0.0008
15	SLU 118	0	0	0	-0.0004	0.0667	0.0008
15	SLU 119	0	0	0	-0.0002	-0.0026	0.0003
15	SLU 120	0	0	0	-0.0003	0.0494	0.0006
15	SLU 121	0	0	0	-0.0002	-0.002	0.0003
15	SLU 122	0	0	0	-0.0003	0.05	0.0007
15	SLU 123	0	0	0	-0.0002	-0.002	0.0003
15	SLU 124	0	0	0	-0.0003	0.05	0.0007
15	SLU 125	0	0	0	-0.0003	-0.0031	0.0006
15	SLU 126	0	0	0	-0.0004	0.0489	0.0009
15	SLU 127	0	0	0	-0.0003	-0.0031	0.0005
15	SLU 128	0	0	0	-0.0004	0.0489	0.0009
15	SLU 129	0	0	0	-0.0003	-0.0026	0.0006
15	SLU 130	0	0	0	-0.0004	0.0494	0.0009
15	SLU 131	0	0	0	-0.0003	-0.0026	0.0006
15	SLU 132	0	0	0	-0.0004	0.0494	0.0009
15	SLE RA 1	0	0	0	-0.0001	-0.0024	0.0001
15	SLE RA 2	0	0	0	-0.0002	0.0438	0.0004
15	SLE RA 3	0	0	0	-0.0002	0.0438	0.0004
15	SLE RA 4	0	0	0	-0.0001	-0.0024	0.0001
15	SLE RA 5	0	0	0	-0.0002	0.0323	0.0003
15	SLE RA 6	0	0	0	-0.0002	0.0442	0.0004
15	SLE RA 7	0	0	0	-0.0002	0.0442	0.0004
15	SLE RA 8	0	0	0	-0.0001	-0.002	0.0001
15	SLE RA 9	0	0	0	-0.0002	0.0326	0.0003
15	SLE RA 10	0	0	0	-0.0001	-0.0017	0.0001
15	SLE RA 11	0	0	0	-0.0002	0.033	0.0004
15	SLE RA 12	0	0	0	-0.0001	-0.0017	0.0001
15	SLE RA 13	0	0	0	-0.0002	0.033	0.0004

Nodo	Cont.	Spostamento			Rotazione		
Ind.	N.br.	ux	uy	uz	rx	ry	rz
15	SLE RA 14	0	0	0	-0.0003	0.0438	0.0005
15	SLE RA 15	0	0	0	-0.0003	0.0438	0.0005
15	SLE RA 16	0	0	0	-0.0001	-0.0024	0.0002
15	SLE RA 17	0	0	0	-0.0002	0.0323	0.0004
15	SLE RA 18	0	0	0	-0.0003	0.0442	0.0005
15	SLE RA 19	0	0	0	-0.0003	0.0442	0.0005
15	SLE RA 20	0	0	0	-0.0001	-0.002	0.0002
15	SLE RA 21	0	0	0	-0.0002	0.0326	0.0004
15	SLE RA 22	0	0	0	-0.0001	-0.0017	0.0002
15	SLE RA 23	0	0	0	-0.0002	0.033	0.0005
15	SLE RA 24	0	0	0	-0.0001	-0.0017	0.0002
15	SLE RA 25	0	0	0	-0.0002	0.033	0.0005
15	SLE RA 26	0	0	0	-0.0002	-0.0024	0.0004
15	SLE RA 27	0	0	0	-0.0003	0.0323	0.0006
15	SLE RA 28	0	0	0	-0.0002	-0.0024	0.0004
15	SLE RA 29	0	0	0	-0.0003	0.0323	0.0006
15	SLE RA 30	0	0	0	-0.0002	-0.002	0.0004
15	SLE RA 31	0	0	0	-0.0003	0.0326	0.0006
15	SLE RA 32	0	0	0	-0.0002	-0.002	0.0004
15	SLE RA 33	0	0	0	-0.0003	0.0326	0.0006
15	SLE FR 1	0	0	0	-0.0001	-0.0024	0.0001
15	SLE FR 2	0	0	0	-0.0002	0.0323	0.0004
15	SLE FR 3	0	0	0	-0.0001	-0.0024	0.0001
15	SLE FR 4	0	0	0	-0.0001	-0.0022	0.0001
15	SLE FR 5	0	0	0	-0.0001	-0.0024	0.0002
15	SLE QP 1	0	0	0	-0.0001	-0.0024	0.0001
15	SLO 1	0	0	0	-0.0939	-0.0085	0.2194
15	SLO 2	0	0	0	-0.0939	-0.0085	0.2194
15	SLO 3	0	0	0	0.0937	-0.0085	-0.2191
15	SLO 4	0	0	0	0.0937	-0.0085	-0.2191
15	SLO 5	0	0	0	-0.3127	-0.0042	0.7311
15	SLO 6	0	0	0	-0.3127	-0.0042	0.7311
15	SLO 7	0	0	0	0.3125	-0.0042	-0.7308
15	SLO 8	0	0	0	0.3125	-0.0042	-0.7308
15	SLO 9	0	0	0	-0.3127	-0.0006	0.7311
15	SLO 10	0	0	0	-0.3127	-0.0006	0.7311
15	SLO 11	0	0	0	0.3125	-0.0006	-0.7308
15	SLO 12	0	0	0	0.3125	-0.0006	-0.7308
15	SLO 13	0	0	0	-0.0939	0.0037	0.2194
15	SLO 14	0	0	0	-0.0939	0.0037	0.2194
15	SLO 15	0	0	0	0.0937	0.0037	-0.2191
15	SLO 16	0	0	0	0.0937	0.0037	-0.2191
15	SLD 1	0	0	0	-0.0868	-0.0074	0.2027
15	SLD 2	0	0	0	-0.0868	-0.0074	0.2027
15	SLD 3	0	0	0	0.0866	-0.0074	-0.2025
15	SLD 4	0	0	0	0.0866	-0.0074	-0.2025
15	SLD 5	0	0	0	-0.289	-0.0039	0.6755
15	SLD 6	0	0	0	-0.289	-0.0039	0.6755
15	SLD 7	0	0	0	0.2888	-0.0039	-0.6752
15	SLD 8	0	0	0	0.2888	-0.0039	-0.6752
15	SLD 9	0	0	0	-0.289	-0.0009	0.6755
15	SLD 10	0	0	0	-0.289	-0.0009	0.6755
15	SLD 11	0	0	0	0.2888	-0.0009	-0.6752
15	SLD 12	0	0	0	0.2888	-0.0009	-0.6752
15	SLD 13	0	0	0	-0.0868	0.0026	0.2027
15	SLD 14	0	0	0	-0.0868	0.0026	0.2027
15	SLD 15	0	0	0	0.0866	0.0026	-0.2025
15	SLD 16	0	0	0	0.0866	0.0026	-0.2025
15	SLV 1	0	0	0	-0.2287	-0.0131	0.5345
15	SLV 2	0	0	0	-0.2287	-0.0131	0.5345
15	SLV 3	0	0	0	0.2285	-0.0131	-0.5343
15	SLV 4	0	0	0	0.2285	-0.0131	-0.5343
15	SLV 5	0	0	0	-0.762	-0.0056	1.7815
15	SLV 6	0	0	0	-0.762	-0.0056	1.7815
15	SLV 7	0	0	0	0.7618	-0.0056	-1.7812
15	SLV 8	0	0	0	0.7618	-0.0056	-1.7812
15	SLV 9	0	0	0	-0.762	0.0009	1.7814
15	SLV 10	0	0	0	-0.762	0.0009	1.7814
15	SLV 11	0	0	0	0.7618	0.0009	-1.7812
15	SLV 12	0	0	0	0.7618	0.0009	-1.7812
15	SLV 13	0	0	0	-0.2287	0.0084	0.5345
15	SLV 14	0	0	0	-0.2287	0.0084	0.5345
15	SLV 15	0	0	0	0.2285	0.0084	-0.5343
15	SLV 16	0	0	0	0.2285	0.0084	-0.5343
16	SLU 1	0	0	0	-0.0006	0.0024	-0.0012
16	SLU 2	0	0	0	-0.0013	-0.0322	-0.0028
16	SLU 3	0	0	0	-0.0013	-0.0324	-0.0028
16	SLU 4	0	0	0	-0.0007	0.0019	-0.0013
16	SLU 5	0	0	0	-0.0012	-0.0241	-0.0025
16	SLU 6	0	0	0	-0.0013	-0.0328	-0.0029
16	SLU 7	0	0	0	-0.0014	-0.033	-0.0029
16	SLU 8	0	0	0	-0.0007	0.0014	-0.0014
16	SLU 9	0	0	0	-0.0012	-0.0246	-0.0026
16	SLU 10	0	0	0	-0.0007	0.0013	-0.0014
16	SLU 11	0	0	0	-0.0012	-0.0247	-0.0026
16	SLU 12	0	0	0	-0.0007	0.0011	-0.0015
16	SLU 13	0	0	0	-0.0012	-0.0249	-0.0027
16	SLU 14	0	0	0	-0.0014	-0.0324	-0.003
16	SLU 15	0	0	0	-0.0014	-0.0326	-0.003
16	SLU 16	0	0	0	-0.0008	0.0017	-0.0015
16	SLU 17	0	0	0	-0.0013	-0.0242	-0.0027
16	SLU 18	0	0	0	-0.0014	-0.033	-0.0031
16	SLU 19	0	0	0	-0.0014	-0.0332	-0.0032
16	SLU 20	0	0	0	-0.0008	0.0012	-0.0017
16	SLU 21	0	0	0	-0.0013	-0.0248	-0.0028

Nodo	Cont.	Spostamento			Rotazione		
Ind.	N.br.	ux	uy	uz	rx	ry	rz
16	SLU 22	0	0	0	-0.0008	0.0011	-0.0016
16	SLU 23	0	0	0	-0.0013	-0.0249	-0.0028
16	SLU 24	0	0	0	-0.0008	0.0009	-0.0017
16	SLU 25	0	0	0	-0.0013	-0.025	-0.0029
16	SLU 26	0	0	0	-0.0009	0.0019	-0.0017
16	SLU 27	0	0	0	-0.0014	-0.0241	-0.0029
16	SLU 28	0	0	0	-0.0009	0.0017	-0.0018
16	SLU 29	0	0	0	-0.0014	-0.0242	-0.003
16	SLU 30	0	0	0	-0.0009	0.0014	-0.0019
16	SLU 31	0	0	0	-0.0014	-0.0246	-0.003
16	SLU 32	0	0	0	-0.0009	0.0012	-0.0019
16	SLU 33	0	0	0	-0.0014	-0.0248	-0.0031
16	SLU 34	0	0	0	-0.0006	0.0024	-0.0012
16	SLU 35	0	0	0	-0.0013	-0.0322	-0.0028
16	SLU 36	0	0	0	-0.0013	-0.0324	-0.0028
16	SLU 37	0	0	0	-0.0007	0.0019	-0.0013
16	SLU 38	0	0	0	-0.0012	-0.0241	-0.0025
16	SLU 39	0	0	0	-0.0013	-0.0328	-0.0029
16	SLU 40	0	0	0	-0.0014	-0.033	-0.0029
16	SLU 41	0	0	0	-0.0007	0.0014	-0.0014
16	SLU 42	0	0	0	-0.0012	-0.0246	-0.0026
16	SLU 43	0	0	0	-0.0007	0.0013	-0.0014
16	SLU 44	0	0	0	-0.0012	-0.0247	-0.0026
16	SLU 45	0	0	0	-0.0007	0.0011	-0.0015
16	SLU 46	0	0	0	-0.0012	-0.0249	-0.0027
16	SLU 47	0	0	0	-0.0014	-0.0324	-0.003
16	SLU 48	0	0	0	-0.0014	-0.0326	-0.003
16	SLU 49	0	0	0	-0.0008	0.0017	-0.0015
16	SLU 50	0	0	0	-0.0013	-0.0242	-0.0027
16	SLU 51	0	0	0	-0.0014	-0.033	-0.0031
16	SLU 52	0	0	0	-0.0014	-0.0332	-0.0032
16	SLU 53	0	0	0	-0.0008	0.0012	-0.0017
16	SLU 54	0	0	0	-0.0013	-0.0248	-0.0028
16	SLU 55	0	0	0	-0.0008	0.0011	-0.0016
16	SLU 56	0	0	0	-0.0013	-0.0249	-0.0028
16	SLU 57	0	0	0	-0.0008	0.0009	-0.0017
16	SLU 58	0	0	0	-0.0013	-0.025	-0.0029
16	SLU 59	0	0	0	-0.0009	0.0019	-0.0017
16	SLU 60	0	0	0	-0.0014	-0.0241	-0.0029
16	SLU 61	0	0	0	-0.0009	0.0017	-0.0018
16	SLU 62	0	0	0	-0.0014	-0.0242	-0.003
16	SLU 63	0	0	0	-0.0009	0.0014	-0.0019
16	SLU 64	0	0	0	-0.0014	-0.0246	-0.003
16	SLU 65	0	0	0	-0.0009	0.0012	-0.0019
16	SLU 66	0	0	0	-0.0014	-0.0248	-0.0031
16	SLU 67	0	0	0	-0.0008	0.0031	-0.0016
16	SLU 68	0	0	0	-0.0015	-0.0315	-0.0032
16	SLU 69	0	0	0	-0.0015	-0.0317	-0.0032
16	SLU 70	0	0	0	-0.0009	0.0026	-0.0017
16	SLU 71	0	0	0	-0.0014	-0.0233	-0.0029
16	SLU 72	0	0	0	-0.0015	-0.0321	-0.0033
16	SLU 73	0	0	0	-0.0015	-0.0323	-0.0033
16	SLU 74	0	0	0	-0.0009	0.0021	-0.0018
16	SLU 75	0	0	0	-0.0014	-0.0239	-0.003
16	SLU 76	0	0	0	-0.0009	0.002	-0.0018
16	SLU 77	0	0	0	-0.0014	-0.0239	-0.003
16	SLU 78	0	0	0	-0.0009	0.0018	-0.0019
16	SLU 79	0	0	0	-0.0014	-0.0241	-0.003
16	SLU 80	0	0	0	-0.0016	-0.0317	-0.0034
16	SLU 81	0	0	0	-0.0016	-0.0319	-0.0034
16	SLU 82	0	0	0	-0.001	0.0025	-0.0019
16	SLU 83	0	0	0	-0.0015	-0.0235	-0.0031
16	SLU 84	0	0	0	-0.0016	-0.0323	-0.0035
16	SLU 85	0	0	0	-0.0016	-0.0324	-0.0035
16	SLU 86	0	0	0	-0.001	0.0019	-0.002
16	SLU 87	0	0	0	-0.0015	-0.0241	-0.0032
16	SLU 88	0	0	0	-0.001	0.0018	-0.002
16	SLU 89	0	0	0	-0.0015	-0.0241	-0.0032
16	SLU 90	0	0	0	-0.001	0.0017	-0.0021
16	SLU 91	0	0	0	-0.0015	-0.0243	-0.0032
16	SLU 92	0	0	0	-0.001	0.0026	-0.0021
16	SLU 93	0	0	0	-0.0015	-0.0233	-0.0033
16	SLU 94	0	0	0	-0.0011	0.0025	-0.0022
16	SLU 95	0	0	0	-0.0016	-0.0235	-0.0033
16	SLU 96	0	0	0	-0.0011	0.0021	-0.0022
16	SLU 97	0	0	0	-0.0016	-0.0239	-0.0034
16	SLU 98	0	0	0	-0.0011	0.0019	-0.0023
16	SLU 99	0	0	0	-0.0016	-0.0241	-0.0034
16	SLU 100	0	0	0	-0.0008	0.0031	-0.0016
16	SLU 101	0	0	0	-0.0015	-0.0315	-0.0032
16	SLU 102	0	0	0	-0.0015	-0.0317	-0.0032
16	SLU 103	0	0	0	-0.0009	0.0026	-0.0017
16	SLU 104	0	0	0	-0.0014	-0.0233	-0.0029
16	SLU 105	0	0	0	-0.0015	-0.0321	-0.0033
16	SLU 106	0	0	0	-0.0015	-0.0323	-0.0033
16	SLU 107	0	0	0	-0.0009	0.0021	-0.0018
16	SLU 108	0	0	0	-0.0014	-0.0239	-0.003
16	SLU 109	0	0	0	-0.0009	0.002	-0.0018
16	SLU 110	0	0	0	-0.0014	-0.0239	-0.003
16	SLU 111	0	0	0	-0.0009	0.0018	-0.0019
16	SLU 112	0	0	0	-0.0014	-0.0241	-0.003
16	SLU 113	0	0	0	-0.0016	-0.0317	-0.0034
16	SLU 114	0	0	0	-0.0016	-0.0319	-0.0034
16	SLU 115	0	0	0	-0.001	0.0025	-0.0019
16	SLU 116	0	0	0	-0.0015	-0.0235	-0.0031

Nodo	Cont.	Spostamento			Rotazione		
Ind.	N.br.	ux	uy	uz	rx	ry	rz
16	SLU 117	0	0	0	-0.0016	-0.0323	-0.0035
16	SLU 118	0	0	0	-0.0016	-0.0324	-0.0035
16	SLU 119	0	0	0	-0.001	0.0019	-0.002
16	SLU 120	0	0	0	-0.0015	-0.0241	-0.0032
16	SLU 121	0	0	0	-0.001	0.0018	-0.002
16	SLU 122	0	0	0	-0.0015	-0.0241	-0.0032
16	SLU 123	0	0	0	-0.001	0.0017	-0.0021
16	SLU 124	0	0	0	-0.0015	-0.0243	-0.0032
16	SLU 125	0	0	0	-0.001	0.0026	-0.0021
16	SLU 126	0	0	0	-0.0015	-0.0233	-0.0033
16	SLU 127	0	0	0	-0.0011	0.0025	-0.0022
16	SLU 128	0	0	0	-0.0016	-0.0235	-0.0033
16	SLU 129	0	0	0	-0.0011	0.0021	-0.0022
16	SLU 130	0	0	0	-0.0016	-0.0239	-0.0034
16	SLU 131	0	0	0	-0.0011	0.0019	-0.0023
16	SLU 132	0	0	0	-0.0016	-0.0241	-0.0034
16	SLE RA 1	0	0	0	-0.0006	0.0024	-0.0012
16	SLE RA 2	0	0	0	-0.0011	-0.0207	-0.0023
16	SLE RA 3	0	0	0	-0.0011	-0.0208	-0.0023
16	SLE RA 4	0	0	0	-0.0007	0.0021	-0.0013
16	SLE RA 5	0	0	0	-0.001	-0.0152	-0.0021
16	SLE RA 6	0	0	0	-0.0011	-0.0211	-0.0023
16	SLE RA 7	0	0	0	-0.0011	-0.0212	-0.0024
16	SLE RA 8	0	0	0	-0.0007	0.0017	-0.0014
16	SLE RA 9	0	0	0	-0.001	-0.0156	-0.0022
16	SLE RA 10	0	0	0	-0.0007	0.0017	-0.0014
16	SLE RA 11	0	0	0	-0.001	-0.0156	-0.0022
16	SLE RA 12	0	0	0	-0.0007	0.0015	-0.0014
16	SLE RA 13	0	0	0	-0.001	-0.0158	-0.0022
16	SLE RA 14	0	0	0	-0.0011	-0.0208	-0.0024
16	SLE RA 15	0	0	0	-0.0011	-0.021	-0.0024
16	SLE RA 16	0	0	0	-0.0007	0.002	-0.0014
16	SLE RA 17	0	0	0	-0.0011	-0.0154	-0.0022
16	SLE RA 18	0	0	0	-0.0012	-0.0212	-0.0025
16	SLE RA 19	0	0	0	-0.0012	-0.0213	-0.0025
16	SLE RA 20	0	0	0	-0.0008	0.0016	-0.0015
16	SLE RA 21	0	0	0	-0.0011	-0.0157	-0.0023
16	SLE RA 22	0	0	0	-0.0008	0.0015	-0.0015
16	SLE RA 23	0	0	0	-0.0011	-0.0158	-0.0023
16	SLE RA 24	0	0	0	-0.0008	0.0014	-0.0015
16	SLE RA 25	0	0	0	-0.0011	-0.0159	-0.0023
16	SLE RA 26	0	0	0	-0.0008	0.0021	-0.0016
16	SLE RA 27	0	0	0	-0.0011	-0.0152	-0.0024
16	SLE RA 28	0	0	0	-0.0008	0.002	-0.0016
16	SLE RA 29	0	0	0	-0.0011	-0.0154	-0.0024
16	SLE RA 30	0	0	0	-0.0008	0.0017	-0.0016
16	SLE RA 31	0	0	0	-0.0011	-0.0156	-0.0024
16	SLE RA 32	0	0	0	-0.0008	0.0016	-0.0017
16	SLE RA 33	0	0	0	-0.0012	-0.0157	-0.0025
16	SLE FR 1	0	0	0	-0.0006	0.0024	-0.0012
16	SLE FR 2	0	0	0	-0.001	-0.0149	-0.002
16	SLE FR 3	0	0	0	-0.0006	0.0023	-0.0013
16	SLE FR 4	0	0	0	-0.0006	0.0022	-0.0013
16	SLE FR 5	0	0	0	-0.0007	0.0023	-0.0014
16	SLE QP 1	0	0	0	-0.0006	0.0024	-0.0012
16	SLO 1	0	0	0	-0.0956	-0.0037	-0.2233
16	SLO 2	0	0	0	-0.0956	-0.0037	-0.2233
16	SLO 3	0	0	0	0.092	-0.0037	0.2153
16	SLO 4	0	0	0	0.092	-0.0037	0.2153
16	SLO 5	0	0	0	-0.3137	0.0006	-0.7331
16	SLO 6	0	0	0	-0.3137	0.0006	-0.7331
16	SLO 7	0	0	0	0.3117	0.0006	0.729
16	SLO 8	0	0	0	0.3117	0.0006	0.729
16	SLO 9	0	0	0	-0.313	0.0042	-0.7314
16	SLO 10	0	0	0	-0.313	0.0042	-0.7314
16	SLO 11	0	0	0	0.3124	0.0042	0.7306
16	SLO 12	0	0	0	0.3124	0.0042	0.7306
16	SLO 13	0	0	0	-0.0933	0.0084	-0.2178
16	SLO 14	0	0	0	-0.0933	0.0084	-0.2178
16	SLO 15	0	0	0	0.0944	0.0084	0.2208
16	SLO 16	0	0	0	0.0944	0.0084	0.2208
16	SLD 1	0	0	0	-0.0883	-0.0026	-0.2061
16	SLD 2	0	0	0	-0.0883	-0.0026	-0.2061
16	SLD 3	0	0	0	0.0851	-0.0026	0.1992
16	SLD 4	0	0	0	0.0851	-0.0026	0.1992
16	SLD 5	0	0	0	-0.2899	0.0009	-0.6774
16	SLD 6	0	0	0	-0.2899	0.0009	-0.6774
16	SLD 7	0	0	0	0.288	0.0009	0.6736
16	SLD 8	0	0	0	0.288	0.0009	0.6736
16	SLD 9	0	0	0	-0.2893	0.0039	-0.676
16	SLD 10	0	0	0	-0.2893	0.0039	-0.676
16	SLD 11	0	0	0	0.2886	0.0039	0.6749
16	SLD 12	0	0	0	0.2886	0.0039	0.6749
16	SLD 13	0	0	0	-0.0864	0.0074	-0.2016
16	SLD 14	0	0	0	-0.0864	0.0074	-0.2016
16	SLD 15	0	0	0	0.087	0.0074	0.2037
16	SLD 16	0	0	0	0.087	0.0074	0.2037
16	SLV 1	0	0	0	-0.2314	-0.0083	-0.5407
16	SLV 2	0	0	0	-0.2314	-0.0083	-0.5407
16	SLV 3	0	0	0	0.2258	-0.0083	0.5282
16	SLV 4	0	0	0	0.2258	-0.0083	0.5282
16	SLV 5	0	0	0	-0.7633	-0.0008	-1.7843
16	SLV 6	0	0	0	-0.7633	-0.0008	-1.7843
16	SLV 7	0	0	0	0.7608	-0.0008	1.7788
16	SLV 8	0	0	0	0.7608	-0.0008	1.7788

Nodo	Cont.	Spostamento			Rotazione		
Ind.	N.br.	ux	uy	uz	rx	ry	rz
16	SLV 9	0	0	0	-0.7621	0.0056	-1.7813
16	SLV 10	0	0	0	-0.7621	0.0056	-1.7813
16	SLV 11	0	0	0	0.7621	0.0056	1.7818
16	SLV 12	0	0	0	0.7621	0.0056	1.7818
16	SLV 13	0	0	0	-0.2271	0.0131	-0.5306
16	SLV 14	0	0	0	-0.2271	0.0131	-0.5306
16	SLV 15	0	0	0	0.2301	0.0131	0.5383
16	SLV 16	0	0	0	0.2301	0.0131	0.5383
17	SLU 1	0	0	0	-0.0006	-0.0024	0.0012
17	SLU 2	0	0	0	-0.0013	0.0322	0.0028
17	SLU 3	0	0	0	-0.0013	0.0324	0.0028
17	SLU 4	0	0	0	-0.0007	-0.0019	0.0013
17	SLU 5	0	0	0	-0.0012	0.0241	0.0025
17	SLU 6	0	0	0	-0.0013	0.0328	0.0029
17	SLU 7	0	0	0	-0.0014	0.033	0.003
17	SLU 8	0	0	0	-0.0007	-0.0014	0.0015
17	SLU 9	0	0	0	-0.0012	0.0246	0.0026
17	SLU 10	0	0	0	-0.0007	-0.0013	0.0015
17	SLU 11	0	0	0	-0.0012	0.0247	0.0026
17	SLU 12	0	0	0	-0.0008	-0.0011	0.0015
17	SLU 13	0	0	0	-0.0012	0.0249	0.0027
17	SLU 14	0	0	0	-0.0014	0.0324	0.003
17	SLU 15	0	0	0	-0.0014	0.0326	0.0031
17	SLU 16	0	0	0	-0.0008	-0.0017	0.0016
17	SLU 17	0	0	0	-0.0013	0.0242	0.0027
17	SLU 18	0	0	0	-0.0014	0.033	0.0031
17	SLU 19	0	0	0	-0.0015	0.0332	0.0032
17	SLU 20	0	0	0	-0.0008	-0.0012	0.0017
17	SLU 21	0	0	0	-0.0013	0.0248	0.0029
17	SLU 22	0	0	0	-0.0008	-0.0011	0.0017
17	SLU 23	0	0	0	-0.0013	0.0249	0.0029
17	SLU 24	0	0	0	-0.0009	-0.0009	0.0017
17	SLU 25	0	0	0	-0.0013	0.025	0.0029
17	SLU 26	0	0	0	-0.0009	-0.0019	0.0018
17	SLU 27	0	0	0	-0.0014	0.0241	0.003
17	SLU 28	0	0	0	-0.0009	-0.0017	0.0018
17	SLU 29	0	0	0	-0.0014	0.0242	0.003
17	SLU 30	0	0	0	-0.0009	-0.0014	0.0019
17	SLU 31	0	0	0	-0.0014	0.0246	0.0031
17	SLU 32	0	0	0	-0.0009	-0.0012	0.0019
17	SLU 33	0	0	0	-0.0014	0.0248	0.0031
17	SLU 34	0	0	0	-0.0006	-0.0024	0.0012
17	SLU 35	0	0	0	-0.0013	0.0322	0.0028
17	SLU 36	0	0	0	-0.0013	0.0324	0.0028
17	SLU 37	0	0	0	-0.0007	-0.0019	0.0013
17	SLU 38	0	0	0	-0.0012	0.0241	0.0025
17	SLU 39	0	0	0	-0.0013	0.0328	0.0029
17	SLU 40	0	0	0	-0.0014	0.033	0.003
17	SLU 41	0	0	0	-0.0007	-0.0014	0.0015
17	SLU 42	0	0	0	-0.0012	0.0246	0.0026
17	SLU 43	0	0	0	-0.0007	-0.0013	0.0015
17	SLU 44	0	0	0	-0.0012	0.0247	0.0026
17	SLU 45	0	0	0	-0.0008	-0.0011	0.0015
17	SLU 46	0	0	0	-0.0012	0.0249	0.0027
17	SLU 47	0	0	0	-0.0014	0.0324	0.003
17	SLU 48	0	0	0	-0.0014	0.0326	0.0031
17	SLU 49	0	0	0	-0.0008	-0.0017	0.0016
17	SLU 50	0	0	0	-0.0013	0.0242	0.0027
17	SLU 51	0	0	0	-0.0014	0.033	0.0031
17	SLU 52	0	0	0	-0.0015	0.0332	0.0032
17	SLU 53	0	0	0	-0.0008	-0.0012	0.0017
17	SLU 54	0	0	0	-0.0013	0.0248	0.0029
17	SLU 55	0	0	0	-0.0008	-0.0011	0.0017
17	SLU 56	0	0	0	-0.0013	0.0249	0.0029
17	SLU 57	0	0	0	-0.0009	-0.0009	0.0017
17	SLU 58	0	0	0	-0.0013	0.025	0.0029
17	SLU 59	0	0	0	-0.0009	-0.0019	0.0018
17	SLU 60	0	0	0	-0.0014	0.0241	0.003
17	SLU 61	0	0	0	-0.0009	-0.0017	0.0018
17	SLU 62	0	0	0	-0.0014	0.0242	0.003
17	SLU 63	0	0	0	-0.0009	-0.0014	0.0019
17	SLU 64	0	0	0	-0.0014	0.0246	0.0031
17	SLU 65	0	0	0	-0.0009	-0.0012	0.0019
17	SLU 66	0	0	0	-0.0014	0.0248	0.0031
17	SLU 67	0	0	0	-0.0008	-0.0031	0.0016
17	SLU 68	0	0	0	-0.0015	0.0315	0.0032
17	SLU 69	0	0	0	-0.0015	0.0317	0.0032
17	SLU 70	0	0	0	-0.0009	-0.0026	0.0017
17	SLU 71	0	0	0	-0.0014	0.0233	0.0029
17	SLU 72	0	0	0	-0.0015	0.0321	0.0033
17	SLU 73	0	0	0	-0.0015	0.0323	0.0033
17	SLU 74	0	0	0	-0.0009	-0.0021	0.0018
17	SLU 75	0	0	0	-0.0014	0.0239	0.003
17	SLU 76	0	0	0	-0.0009	-0.002	0.0018
17	SLU 77	0	0	0	-0.0014	0.024	0.003
17	SLU 78	0	0	0	-0.0009	-0.0018	0.0019
17	SLU 79	0	0	0	-0.0014	0.0241	0.003
17	SLU 80	0	0	0	-0.0016	0.0317	0.0034
17	SLU 81	0	0	0	-0.0016	0.0319	0.0034
17	SLU 82	0	0	0	-0.001	-0.0025	0.0019
17	SLU 83	0	0	0	-0.0015	0.0235	0.0031
17	SLU 84	0	0	0	-0.0016	0.0323	0.0035
17	SLU 85	0	0	0	-0.0016	0.0324	0.0035
17	SLU 86	0	0	0	-0.001	-0.0019	0.002
17	SLU 87	0	0	0	-0.0015	0.0241	0.0032

Nodo	Cont.	Spostamento			Rotazione		
Ind.	N.br.	ux	uy	uz	rx	ry	rz
17	SLU 88	0	0	0	-0.001	-0.0018	0.002
17	SLU 89	0	0	0	-0.0015	0.0241	0.0032
17	SLU 90	0	0	0	-0.001	-0.0017	0.0021
17	SLU 91	0	0	0	-0.0015	0.0243	0.0033
17	SLU 92	0	0	0	-0.0011	-0.0026	0.0022
17	SLU 93	0	0	0	-0.0016	0.0233	0.0033
17	SLU 94	0	0	0	-0.0011	-0.0024	0.0022
17	SLU 95	0	0	0	-0.0016	0.0235	0.0034
17	SLU 96	0	0	0	-0.0011	-0.0021	0.0023
17	SLU 97	0	0	0	-0.0016	0.0239	0.0034
17	SLU 98	0	0	0	-0.0011	-0.0019	0.0023
17	SLU 99	0	0	0	-0.0016	0.0241	0.0035
17	SLU 100	0	0	0	-0.0008	-0.0031	0.0016
17	SLU 101	0	0	0	-0.0015	0.0315	0.0032
17	SLU 102	0	0	0	-0.0015	0.0317	0.0032
17	SLU 103	0	0	0	-0.0009	-0.0026	0.0017
17	SLU 104	0	0	0	-0.0014	0.0233	0.0029
17	SLU 105	0	0	0	-0.0015	0.0321	0.0033
17	SLU 106	0	0	0	-0.0015	0.0323	0.0033
17	SLU 107	0	0	0	-0.0009	-0.0021	0.0018
17	SLU 108	0	0	0	-0.0014	0.0239	0.003
17	SLU 109	0	0	0	-0.0009	-0.002	0.0018
17	SLU 110	0	0	0	-0.0014	0.024	0.003
17	SLU 111	0	0	0	-0.0009	-0.0018	0.0019
17	SLU 112	0	0	0	-0.0014	0.0241	0.003
17	SLU 113	0	0	0	-0.0016	0.0317	0.0034
17	SLU 114	0	0	0	-0.0016	0.0319	0.0034
17	SLU 115	0	0	0	-0.001	-0.0025	0.0019
17	SLU 116	0	0	0	-0.0015	0.0235	0.0031
17	SLU 117	0	0	0	-0.0016	0.0323	0.0035
17	SLU 118	0	0	0	-0.0016	0.0324	0.0035
17	SLU 119	0	0	0	-0.001	-0.0019	0.002
17	SLU 120	0	0	0	-0.0015	0.0241	0.0032
17	SLU 121	0	0	0	-0.001	-0.0018	0.002
17	SLU 122	0	0	0	-0.0015	0.0241	0.0032
17	SLU 123	0	0	0	-0.001	-0.0017	0.0021
17	SLU 124	0	0	0	-0.0015	0.0243	0.0033
17	SLU 125	0	0	0	-0.0011	-0.0026	0.0022
17	SLU 126	0	0	0	-0.0016	0.0233	0.0033
17	SLU 127	0	0	0	-0.0011	-0.0024	0.0022
17	SLU 128	0	0	0	-0.0016	0.0235	0.0034
17	SLU 129	0	0	0	-0.0011	-0.0021	0.0023
17	SLU 130	0	0	0	-0.0016	0.0239	0.0034
17	SLU 131	0	0	0	-0.0011	-0.0019	0.0023
17	SLU 132	0	0	0	-0.0016	0.0241	0.0035
17	SLE RA 1	0	0	0	-0.0006	-0.0024	0.0012
17	SLE RA 2	0	0	0	-0.0011	0.0207	0.0023
17	SLE RA 3	0	0	0	-0.0011	0.0208	0.0023
17	SLE RA 4	0	0	0	-0.0007	-0.0021	0.0013
17	SLE RA 5	0	0	0	-0.001	0.0152	0.0021
17	SLE RA 6	0	0	0	-0.0011	0.0211	0.0023
17	SLE RA 7	0	0	0	-0.0011	0.0212	0.0024
17	SLE RA 8	0	0	0	-0.0007	-0.0017	0.0014
17	SLE RA 9	0	0	0	-0.001	0.0156	0.0022
17	SLE RA 10	0	0	0	-0.0007	-0.0017	0.0014
17	SLE RA 11	0	0	0	-0.001	0.0157	0.0022
17	SLE RA 12	0	0	0	-0.0007	-0.0015	0.0014
17	SLE RA 13	0	0	0	-0.001	0.0158	0.0022
17	SLE RA 14	0	0	0	-0.0011	0.0208	0.0024
17	SLE RA 15	0	0	0	-0.0011	0.021	0.0025
17	SLE RA 16	0	0	0	-0.0007	-0.002	0.0015
17	SLE RA 17	0	0	0	-0.0011	0.0154	0.0022
17	SLE RA 18	0	0	0	-0.0012	0.0212	0.0025
17	SLE RA 19	0	0	0	-0.0012	0.0213	0.0025
17	SLE RA 20	0	0	0	-0.0008	-0.0016	0.0015
17	SLE RA 21	0	0	0	-0.0011	0.0157	0.0023
17	SLE RA 22	0	0	0	-0.0008	-0.0015	0.0015
17	SLE RA 23	0	0	0	-0.0011	0.0158	0.0023
17	SLE RA 24	0	0	0	-0.0008	-0.0014	0.0016
17	SLE RA 25	0	0	0	-0.0011	0.0159	0.0023
17	SLE RA 26	0	0	0	-0.0008	-0.0021	0.0016
17	SLE RA 27	0	0	0	-0.0011	0.0152	0.0024
17	SLE RA 28	0	0	0	-0.0008	-0.002	0.0016
17	SLE RA 29	0	0	0	-0.0011	0.0154	0.0024
17	SLE RA 30	0	0	0	-0.0008	-0.0017	0.0017
17	SLE RA 31	0	0	0	-0.0012	0.0156	0.0025
17	SLE RA 32	0	0	0	-0.0008	-0.0016	0.0017
17	SLE RA 33	0	0	0	-0.0012	0.0157	0.0025
17	SLE FR 1	0	0	0	-0.0006	-0.0024	0.0012
17	SLE FR 2	0	0	0	-0.001	0.0149	0.002
17	SLE FR 3	0	0	0	-0.0006	-0.0023	0.0013
17	SLE FR 4	0	0	0	-0.0006	-0.0022	0.0013
17	SLE FR 5	0	0	0	-0.0007	-0.0023	0.0014
17	SLE QP 1	0	0	0	-0.0006	-0.0024	0.0012
17	SLO 1	0	0	0	-0.0933	-0.0084	0.2178
17	SLO 2	0	0	0	-0.0933	-0.0084	0.2178
17	SLO 3	0	0	0	0.0944	-0.0084	-0.2208
17	SLO 4	0	0	0	0.0944	-0.0084	-0.2208
17	SLO 5	0	0	0	-0.313	-0.0042	0.7314
17	SLO 6	0	0	0	-0.313	-0.0042	0.7314
17	SLO 7	0	0	0	0.3124	-0.0042	-0.7306
17	SLO 8	0	0	0	0.3124	-0.0042	-0.7306
17	SLO 9	0	0	0	-0.3137	-0.0006	0.7331
17	SLO 10	0	0	0	-0.3137	-0.0006	0.7331
17	SLO 11	0	0	0	0.3117	-0.0006	-0.729

Nodo	Cont.	Spostamento			Rotazione		
Ind.	N.br.	ux	uy	uz	rx	ry	rz
17	SLO 12	0	0	0	0.3117	-0.0006	-0.729
17	SLO 13	0	0	0	-0.0956	0.0037	0.2233
17	SLO 14	0	0	0	-0.0956	0.0037	0.2233
17	SLO 15	0	0	0	0.092	0.0037	-0.2153
17	SLO 16	0	0	0	0.092	0.0037	-0.2153
17	SLD 1	0	0	0	-0.0864	-0.0074	0.2016
17	SLD 2	0	0	0	-0.0864	-0.0074	0.2016
17	SLD 3	0	0	0	0.087	-0.0074	-0.2037
17	SLD 4	0	0	0	0.087	-0.0074	-0.2037
17	SLD 5	0	0	0	-0.2893	-0.0039	0.676
17	SLD 6	0	0	0	-0.2893	-0.0039	0.676
17	SLD 7	0	0	0	0.2886	-0.0039	-0.6749
17	SLD 8	0	0	0	0.2886	-0.0039	-0.6749
17	SLD 9	0	0	0	-0.2899	-0.0009	0.6774
17	SLD 10	0	0	0	-0.2899	-0.0009	0.6774
17	SLD 11	0	0	0	0.288	-0.0009	-0.6736
17	SLD 12	0	0	0	0.288	-0.0009	-0.6736
17	SLD 13	0	0	0	-0.0883	0.0026	0.2061
17	SLD 14	0	0	0	-0.0883	0.0026	0.2061
17	SLD 15	0	0	0	0.0851	0.0026	-0.1992
17	SLD 16	0	0	0	0.0851	0.0026	-0.1992
17	SLV 1	0	0	0	-0.2271	-0.0131	0.5306
17	SLV 2	0	0	0	-0.2271	-0.0131	0.5306
17	SLV 3	0	0	0	0.2301	-0.0131	-0.5383
17	SLV 4	0	0	0	0.2301	-0.0131	-0.5383
17	SLV 5	0	0	0	-0.7621	-0.0056	1.7813
17	SLV 6	0	0	0	-0.7621	-0.0056	1.7813
17	SLV 7	0	0	0	0.7621	-0.0056	-1.7818
17	SLV 8	0	0	0	0.7621	-0.0056	-1.7818
17	SLV 9	0	0	0	-0.7633	0.0008	1.7843
17	SLV 10	0	0	0	-0.7633	0.0008	1.7843
17	SLV 11	0	0	0	0.7608	0.0008	-1.7788
17	SLV 12	0	0	0	0.7608	0.0008	-1.7788
17	SLV 13	0	0	0	-0.2314	0.0083	0.5407
17	SLV 14	0	0	0	-0.2314	0.0083	0.5407
17	SLV 15	0	0	0	0.2258	0.0083	-0.5282
17	SLV 16	0	0	0	0.2258	0.0083	-0.5282
18	SLU 1	0	0	0	-0.0017	-0.0006	-0.0032
18	SLU 2	0	0	0	-0.0024	-0.0006	-0.005
18	SLU 3	0	0	0	-0.0025	-0.0018	-0.0051
18	SLU 4	0	0	0	-0.0018	-0.0035	-0.0035
18	SLU 5	0	0	0	-0.0024	-0.0035	-0.0048
18	SLU 6	0	0	0	-0.0026	-0.0023	-0.0052
18	SLU 7	0	0	0	-0.0026	-0.0035	-0.0054
18	SLU 8	0	0	0	-0.002	-0.0052	-0.0038
18	SLU 9	0	0	0	-0.0025	-0.0052	-0.0051
18	SLU 10	0	0	0	-0.0019	-0.0041	-0.0037
18	SLU 11	0	0	0	-0.0025	-0.0041	-0.005
18	SLU 12	0	0	0	-0.002	-0.0052	-0.0038
18	SLU 13	0	0	0	-0.0026	-0.0052	-0.0052
18	SLU 14	0	0	0	-0.0026	-0.0019	-0.0053
18	SLU 15	0	0	0	-0.0026	-0.003	-0.0054
18	SLU 16	0	0	0	-0.002	-0.0047	-0.0038
18	SLU 17	0	0	0	-0.0026	-0.0047	-0.0052
18	SLU 18	0	0	0	-0.0027	-0.0036	-0.0055
18	SLU 19	0	0	0	-0.0028	-0.0048	-0.0057
18	SLU 20	0	0	0	-0.0021	-0.0065	-0.0041
18	SLU 21	0	0	0	-0.0027	-0.0064	-0.0054
18	SLU 22	0	0	0	-0.0021	-0.0053	-0.004
18	SLU 23	0	0	0	-0.0026	-0.0053	-0.0054
18	SLU 24	0	0	0	-0.0021	-0.0065	-0.0041
18	SLU 25	0	0	0	-0.0027	-0.0065	-0.0055
18	SLU 26	0	0	0	-0.0021	-0.0038	-0.004
18	SLU 27	0	0	0	-0.0026	-0.0038	-0.0053
18	SLU 28	0	0	0	-0.0021	-0.0049	-0.0041
18	SLU 29	0	0	0	-0.0027	-0.0049	-0.0055
18	SLU 30	0	0	0	-0.0022	-0.0055	-0.0042
18	SLU 31	0	0	0	-0.0028	-0.0055	-0.0056
18	SLU 32	0	0	0	-0.0023	-0.0067	-0.0044
18	SLU 33	0	0	0	-0.0028	-0.0067	-0.0057
18	SLU 34	0	0	0	-0.0017	-0.0006	-0.0032
18	SLU 35	0	0	0	-0.0024	-0.0006	-0.005
18	SLU 36	0	0	0	-0.0025	-0.0018	-0.0051
18	SLU 37	0	0	0	-0.0018	-0.0035	-0.0035
18	SLU 38	0	0	0	-0.0024	-0.0035	-0.0048
18	SLU 39	0	0	0	-0.0026	-0.0023	-0.0052
18	SLU 40	0	0	0	-0.0026	-0.0035	-0.0054
18	SLU 41	0	0	0	-0.002	-0.0052	-0.0038
18	SLU 42	0	0	0	-0.0025	-0.0052	-0.0051
18	SLU 43	0	0	0	-0.0019	-0.0041	-0.0037
18	SLU 44	0	0	0	-0.0025	-0.0041	-0.005
18	SLU 45	0	0	0	-0.002	-0.0052	-0.0038
18	SLU 46	0	0	0	-0.0026	-0.0052	-0.0052
18	SLU 47	0	0	0	-0.0026	-0.0019	-0.0053
18	SLU 48	0	0	0	-0.0026	-0.003	-0.0054
18	SLU 49	0	0	0	-0.002	-0.0047	-0.0038
18	SLU 50	0	0	0	-0.0026	-0.0047	-0.0052
18	SLU 51	0	0	0	-0.0027	-0.0036	-0.0055
18	SLU 52	0	0	0	-0.0028	-0.0048	-0.0057
18	SLU 53	0	0	0	-0.0021	-0.0065	-0.0041
18	SLU 54	0	0	0	-0.0027	-0.0064	-0.0054
18	SLU 55	0	0	0	-0.0021	-0.0053	-0.004
18	SLU 56	0	0	0	-0.0026	-0.0053	-0.0054
18	SLU 57	0	0	0	-0.0021	-0.0065	-0.0041
18	SLU 58	0	0	0	-0.0027	-0.0065	-0.0055

Nodo	Cont.	Spostamento			Rotazione		
Ind.	N.br.	ux	uy	uz	rx	ry	rz
18	SLU 59	0	0	0	-0.0021	-0.0038	-0.004
18	SLU 60	0	0	0	-0.0026	-0.0038	-0.0053
18	SLU 61	0	0	0	-0.0021	-0.0049	-0.0041
18	SLU 62	0	0	0	-0.0027	-0.0049	-0.0055
18	SLU 63	0	0	0	-0.0022	-0.0055	-0.0042
18	SLU 64	0	0	0	-0.0028	-0.0055	-0.0056
18	SLU 65	0	0	0	-0.0023	-0.0067	-0.0044
18	SLU 66	0	0	0	-0.0028	-0.0067	-0.0057
18	SLU 67	0	0	0	-0.0022	-0.0008	-0.0041
18	SLU 68	0	0	0	-0.0029	-0.0008	-0.0059
18	SLU 69	0	0	0	-0.003	-0.0019	-0.006
18	SLU 70	0	0	0	-0.0024	-0.0036	-0.0045
18	SLU 71	0	0	0	-0.0029	-0.0036	-0.0058
18	SLU 72	0	0	0	-0.0031	-0.0025	-0.0062
18	SLU 73	0	0	0	-0.0031	-0.0037	-0.0063
18	SLU 74	0	0	0	-0.0025	-0.0054	-0.0047
18	SLU 75	0	0	0	-0.003	-0.0054	-0.0061
18	SLU 76	0	0	0	-0.0024	-0.0043	-0.0046
18	SLU 77	0	0	0	-0.003	-0.0043	-0.006
18	SLU 78	0	0	0	-0.0025	-0.0054	-0.0048
18	SLU 79	0	0	0	-0.0031	-0.0054	-0.0061
18	SLU 80	0	0	0	-0.0031	-0.0021	-0.0062
18	SLU 81	0	0	0	-0.0032	-0.0032	-0.0064
18	SLU 82	0	0	0	-0.0025	-0.0049	-0.0048
18	SLU 83	0	0	0	-0.0031	-0.0049	-0.0061
18	SLU 84	0	0	0	-0.0032	-0.0038	-0.0065
18	SLU 85	0	0	0	-0.0033	-0.0049	-0.0066
18	SLU 86	0	0	0	-0.0026	-0.0066	-0.005
18	SLU 87	0	0	0	-0.0032	-0.0066	-0.0064
18	SLU 88	0	0	0	-0.0026	-0.0055	-0.005
18	SLU 89	0	0	0	-0.0032	-0.0055	-0.0063
18	SLU 90	0	0	0	-0.0027	-0.0067	-0.0051
18	SLU 91	0	0	0	-0.0032	-0.0067	-0.0064
18	SLU 92	0	0	0	-0.0026	-0.004	-0.0049
18	SLU 93	0	0	0	-0.0031	-0.004	-0.0063
18	SLU 94	0	0	0	-0.0026	-0.0051	-0.0051
18	SLU 95	0	0	0	-0.0032	-0.0051	-0.0064
18	SLU 96	0	0	0	-0.0027	-0.0057	-0.0052
18	SLU 97	0	0	0	-0.0033	-0.0057	-0.0065
18	SLU 98	0	0	0	-0.0028	-0.0068	-0.0053
18	SLU 99	0	0	0	-0.0033	-0.0068	-0.0067
18	SLU 100	0	0	0	-0.0022	-0.0008	-0.0041
18	SLU 101	0	0	0	-0.0029	-0.0008	-0.0059
18	SLU 102	0	0	0	-0.003	-0.0019	-0.006
18	SLU 103	0	0	0	-0.0024	-0.0036	-0.0045
18	SLU 104	0	0	0	-0.0029	-0.0036	-0.0058
18	SLU 105	0	0	0	-0.0031	-0.0025	-0.0062
18	SLU 106	0	0	0	-0.0031	-0.0037	-0.0063
18	SLU 107	0	0	0	-0.0025	-0.0054	-0.0047
18	SLU 108	0	0	0	-0.003	-0.0054	-0.0061
18	SLU 109	0	0	0	-0.0024	-0.0043	-0.0046
18	SLU 110	0	0	0	-0.003	-0.0043	-0.006
18	SLU 111	0	0	0	-0.0025	-0.0054	-0.0048
18	SLU 112	0	0	0	-0.0031	-0.0054	-0.0061
18	SLU 113	0	0	0	-0.0031	-0.0021	-0.0062
18	SLU 114	0	0	0	-0.0032	-0.0032	-0.0064
18	SLU 115	0	0	0	-0.0025	-0.0049	-0.0048
18	SLU 116	0	0	0	-0.0031	-0.0049	-0.0061
18	SLU 117	0	0	0	-0.0032	-0.0038	-0.0065
18	SLU 118	0	0	0	-0.0033	-0.0049	-0.0066
18	SLU 119	0	0	0	-0.0026	-0.0066	-0.005
18	SLU 120	0	0	0	-0.0032	-0.0066	-0.0064
18	SLU 121	0	0	0	-0.0026	-0.0055	-0.005
18	SLU 122	0	0	0	-0.0032	-0.0055	-0.0063
18	SLU 123	0	0	0	-0.0027	-0.0067	-0.0051
18	SLU 124	0	0	0	-0.0032	-0.0067	-0.0064
18	SLU 125	0	0	0	-0.0026	-0.004	-0.0049
18	SLU 126	0	0	0	-0.0031	-0.004	-0.0063
18	SLU 127	0	0	0	-0.0026	-0.0051	-0.0051
18	SLU 128	0	0	0	-0.0032	-0.0051	-0.0064
18	SLU 129	0	0	0	-0.0027	-0.0057	-0.0052
18	SLU 130	0	0	0	-0.0033	-0.0057	-0.0065
18	SLU 131	0	0	0	-0.0028	-0.0068	-0.0053
18	SLU 132	0	0	0	-0.0033	-0.0068	-0.0067
18	SLE RA 1	0	0	0	-0.0017	-0.0006	-0.0032
18	SLE RA 2	0	0	0	-0.0022	-0.0006	-0.0044
18	SLE RA 3	0	0	0	-0.0022	-0.0014	-0.0045
18	SLE RA 4	0	0	0	-0.0018	-0.0025	-0.0034
18	SLE RA 5	0	0	0	-0.0022	-0.0025	-0.0043
18	SLE RA 6	0	0	0	-0.0023	-0.0018	-0.0045
18	SLE RA 7	0	0	0	-0.0023	-0.0025	-0.0046
18	SLE RA 8	0	0	0	-0.0019	-0.0037	-0.0036
18	SLE RA 9	0	0	0	-0.0022	-0.0037	-0.0045
18	SLE RA 10	0	0	0	-0.0019	-0.0029	-0.0035
18	SLE RA 11	0	0	0	-0.0022	-0.0029	-0.0044
18	SLE RA 12	0	0	0	-0.0019	-0.0037	-0.0036
18	SLE RA 13	0	0	0	-0.0023	-0.0037	-0.0045
18	SLE RA 14	0	0	0	-0.0023	-0.0015	-0.0046
18	SLE RA 15	0	0	0	-0.0023	-0.0022	-0.0047
18	SLE RA 16	0	0	0	-0.0019	-0.0034	-0.0036
18	SLE RA 17	0	0	0	-0.0023	-0.0034	-0.0045
18	SLE RA 18	0	0	0	-0.0024	-0.0026	-0.0048
18	SLE RA 19	0	0	0	-0.0024	-0.0034	-0.0048
18	SLE RA 20	0	0	0	-0.002	-0.0045	-0.0038
18	SLE RA 21	0	0	0	-0.0023	-0.0045	-0.0047

Nodo	Cont.	Spostamento			Rotazione		
Ind.	N.br.	ux	uy	uz	rx	ry	rz
18	SLE RA 22	0	0	0	-0.002	-0.0038	-0.0037
18	SLE RA 23	0	0	0	-0.0023	-0.0038	-0.0046
18	SLE RA 24	0	0	0	-0.002	-0.0045	-0.0038
18	SLE RA 25	0	0	0	-0.0024	-0.0045	-0.0047
18	SLE RA 26	0	0	0	-0.0019	-0.0027	-0.0037
18	SLE RA 27	0	0	0	-0.0023	-0.0027	-0.0046
18	SLE RA 28	0	0	0	-0.002	-0.0035	-0.0038
18	SLE RA 29	0	0	0	-0.0024	-0.0035	-0.0047
18	SLE RA 30	0	0	0	-0.002	-0.0039	-0.0039
18	SLE RA 31	0	0	0	-0.0024	-0.0039	-0.0048
18	SLE RA 32	0	0	0	-0.0021	-0.0046	-0.004
18	SLE RA 33	0	0	0	-0.0024	-0.0046	-0.0049
18	SLE FR 1	0	0	0	-0.0017	-0.0006	-0.0032
18	SLE FR 2	0	0	0	-0.0021	-0.0006	-0.0041
18	SLE FR 3	0	0	0	-0.0017	-0.0014	-0.0033
18	SLE FR 4	0	0	0	-0.0017	-0.0011	-0.0032
18	SLE FR 5	0	0	0	-0.0018	-0.0015	-0.0034
18	SLE QP 1	0	0	0	-0.0017	-0.0006	-0.0032
18	SLO 1	0	0	0	-0.1005	-0.0551	-0.2341
18	SLO 2	0	0	0	-0.1005	-0.0551	-0.2341
18	SLO 3	0	0	0	0.0919	-0.0551	0.2154
18	SLO 4	0	0	0	0.0919	-0.0551	0.2154
18	SLO 5	0	0	0	-0.3232	-0.017	-0.7543
18	SLO 6	0	0	0	-0.3232	-0.017	-0.7543
18	SLO 7	0	0	0	0.3182	-0.017	0.7442
18	SLO 8	0	0	0	0.3182	-0.017	0.7442
18	SLO 9	0	0	0	-0.3216	0.0157	-0.7505
18	SLO 10	0	0	0	-0.3216	0.0157	-0.7505
18	SLO 11	0	0	0	0.3198	0.0157	0.7479
18	SLO 12	0	0	0	0.3198	0.0157	0.7479
18	SLO 13	0	0	0	-0.0953	0.0538	-0.2217
18	SLO 14	0	0	0	-0.0953	0.0538	-0.2217
18	SLO 15	0	0	0	0.0972	0.0538	0.2278
18	SLO 16	0	0	0	0.0972	0.0538	0.2278
18	SLD 1	0	0	0	-0.0927	-0.0453	-0.2159
18	SLD 2	0	0	0	-0.0927	-0.0453	-0.2159
18	SLD 3	0	0	0	0.0851	-0.0453	0.1994
18	SLD 4	0	0	0	0.0851	-0.0453	0.1994
18	SLD 5	0	0	0	-0.2987	-0.014	-0.697
18	SLD 6	0	0	0	-0.2987	-0.014	-0.697
18	SLD 7	0	0	0	0.294	-0.014	0.6876
18	SLD 8	0	0	0	0.294	-0.014	0.6876
18	SLD 9	0	0	0	-0.2974	0.0128	-0.6939
18	SLD 10	0	0	0	-0.2974	0.0128	-0.6939
18	SLD 11	0	0	0	0.2953	0.0128	0.6906
18	SLD 12	0	0	0	0.2953	0.0128	0.6906
18	SLD 13	0	0	0	-0.0884	0.0441	-0.2058
18	SLD 14	0	0	0	-0.0884	0.0441	-0.2058
18	SLD 15	0	0	0	0.0894	0.0441	0.2096
18	SLD 16	0	0	0	0.0894	0.0441	0.2096
18	SLV 1	0	0	0	-0.241	-0.1005	-0.5623
18	SLV 2	0	0	0	-0.241	-0.1005	-0.5623
18	SLV 3	0	0	0	0.228	-0.1005	0.5333
18	SLV 4	0	0	0	0.228	-0.1005	0.5333
18	SLV 5	0	0	0	-0.7847	-0.0306	-1.8325
18	SLV 6	0	0	0	-0.7847	-0.0306	-1.8325
18	SLV 7	0	0	0	0.7785	-0.0306	1.8193
18	SLV 8	0	0	0	0.7785	-0.0306	1.8193
18	SLV 9	0	0	0	-0.7818	0.0293	-1.8257
18	SLV 10	0	0	0	-0.7818	0.0293	-1.8257
18	SLV 11	0	0	0	0.7813	0.0293	1.8261
18	SLV 12	0	0	0	0.7813	0.0293	1.8261
18	SLV 13	0	0	0	-0.2313	0.0992	-0.5396
18	SLV 14	0	0	0	-0.2313	0.0992	-0.5396
18	SLV 15	0	0	0	0.2376	0.0992	0.5559
18	SLV 16	0	0	0	0.2376	0.0992	0.5559
19	SLU 1	0	0	0	-0.0017	0.0006	0.0032
19	SLU 2	0	0	0	-0.0024	0.0006	0.005
19	SLU 3	0	0	0	-0.0025	0.0018	0.0051
19	SLU 4	0	0	0	-0.0018	0.0035	0.0035
19	SLU 5	0	0	0	-0.0024	0.0035	0.0048
19	SLU 6	0	0	0	-0.0026	0.0025	0.0052
19	SLU 7	0	0	0	-0.0026	0.0037	0.0054
19	SLU 8	0	0	0	-0.002	0.0054	0.0038
19	SLU 9	0	0	0	-0.0025	0.0054	0.0051
19	SLU 10	0	0	0	-0.0019	0.0045	0.0037
19	SLU 11	0	0	0	-0.0025	0.0045	0.0051
19	SLU 12	0	0	0	-0.002	0.0056	0.0038
19	SLU 13	0	0	0	-0.0026	0.0056	0.0052
19	SLU 14	0	0	0	-0.0026	0.0022	0.0053
19	SLU 15	0	0	0	-0.0027	0.0033	0.0054
19	SLU 16	0	0	0	-0.002	0.005	0.0038
19	SLU 17	0	0	0	-0.0026	0.005	0.0052
19	SLU 18	0	0	0	-0.0027	0.0041	0.0056
19	SLU 19	0	0	0	-0.0028	0.0053	0.0057
19	SLU 20	0	0	0	-0.0021	0.007	0.0041
19	SLU 21	0	0	0	-0.0027	0.007	0.0055
19	SLU 22	0	0	0	-0.0021	0.006	0.0041
19	SLU 23	0	0	0	-0.0027	0.006	0.0054
19	SLU 24	0	0	0	-0.0022	0.0072	0.0042
19	SLU 25	0	0	0	-0.0027	0.0072	0.0055
19	SLU 26	0	0	0	-0.0021	0.0046	0.004
19	SLU 27	0	0	0	-0.0027	0.0046	0.0054
19	SLU 28	0	0	0	-0.0022	0.0057	0.0042
19	SLU 29	0	0	0	-0.0027	0.0057	0.0055

Nodo	Cont.	Spostamento			Rotazione		
Ind.	N.br.	ux	uy	uz	rx	ry	rz
19	SLU 30	0	0	0	-0.0022	0.0065	0.0043
19	SLU 31	0	0	0	-0.0028	0.0065	0.0056
19	SLU 32	0	0	0	-0.0023	0.0077	0.0044
19	SLU 33	0	0	0	-0.0028	0.0077	0.0058
19	SLU 34	0	0	0	-0.0017	0.0006	0.0032
19	SLU 35	0	0	0	-0.0024	0.0006	0.005
19	SLU 36	0	0	0	-0.0025	0.0018	0.0051
19	SLU 37	0	0	0	-0.0018	0.0035	0.0035
19	SLU 38	0	0	0	-0.0024	0.0035	0.0048
19	SLU 39	0	0	0	-0.0026	0.0025	0.0052
19	SLU 40	0	0	0	-0.0026	0.0037	0.0054
19	SLU 41	0	0	0	-0.002	0.0054	0.0038
19	SLU 42	0	0	0	-0.0025	0.0054	0.0051
19	SLU 43	0	0	0	-0.0019	0.0045	0.0037
19	SLU 44	0	0	0	-0.0025	0.0045	0.0051
19	SLU 45	0	0	0	-0.002	0.0056	0.0038
19	SLU 46	0	0	0	-0.0026	0.0056	0.0052
19	SLU 47	0	0	0	-0.0026	0.0022	0.0053
19	SLU 48	0	0	0	-0.0027	0.0033	0.0054
19	SLU 49	0	0	0	-0.002	0.005	0.0038
19	SLU 50	0	0	0	-0.0026	0.005	0.0052
19	SLU 51	0	0	0	-0.0027	0.0041	0.0056
19	SLU 52	0	0	0	-0.0028	0.0053	0.0057
19	SLU 53	0	0	0	-0.0021	0.007	0.0041
19	SLU 54	0	0	0	-0.0027	0.007	0.0055
19	SLU 55	0	0	0	-0.0021	0.006	0.0041
19	SLU 56	0	0	0	-0.0027	0.006	0.0054
19	SLU 57	0	0	0	-0.0022	0.0072	0.0042
19	SLU 58	0	0	0	-0.0027	0.0072	0.0055
19	SLU 59	0	0	0	-0.0021	0.0046	0.004
19	SLU 60	0	0	0	-0.0027	0.0046	0.0054
19	SLU 61	0	0	0	-0.0022	0.0057	0.0042
19	SLU 62	0	0	0	-0.0027	0.0057	0.0055
19	SLU 63	0	0	0	-0.0022	0.0065	0.0043
19	SLU 64	0	0	0	-0.0028	0.0065	0.0056
19	SLU 65	0	0	0	-0.0023	0.0077	0.0044
19	SLU 66	0	0	0	-0.0028	0.0077	0.0058
19	SLU 67	0	0	0	-0.0022	0.0008	0.0041
19	SLU 68	0	0	0	-0.0029	0.0008	0.0059
19	SLU 69	0	0	0	-0.003	0.0019	0.006
19	SLU 70	0	0	0	-0.0024	0.0036	0.0045
19	SLU 71	0	0	0	-0.0029	0.0036	0.0058
19	SLU 72	0	0	0	-0.0031	0.0027	0.0062
19	SLU 73	0	0	0	-0.0031	0.0039	0.0063
19	SLU 74	0	0	0	-0.0025	0.0056	0.0047
19	SLU 75	0	0	0	-0.003	0.0056	0.0061
19	SLU 76	0	0	0	-0.0025	0.0046	0.0047
19	SLU 77	0	0	0	-0.003	0.0046	0.006
19	SLU 78	0	0	0	-0.0025	0.0058	0.0048
19	SLU 79	0	0	0	-0.0031	0.0058	0.0061
19	SLU 80	0	0	0	-0.0031	0.0024	0.0063
19	SLU 81	0	0	0	-0.0032	0.0035	0.0064
19	SLU 82	0	0	0	-0.0025	0.0052	0.0048
19	SLU 83	0	0	0	-0.0031	0.0052	0.0061
19	SLU 84	0	0	0	-0.0032	0.0043	0.0065
19	SLU 85	0	0	0	-0.0033	0.0054	0.0067
19	SLU 86	0	0	0	-0.0026	0.0071	0.0051
19	SLU 87	0	0	0	-0.0032	0.0071	0.0064
19	SLU 88	0	0	0	-0.0026	0.0062	0.005
19	SLU 89	0	0	0	-0.0032	0.0062	0.0063
19	SLU 90	0	0	0	-0.0027	0.0074	0.0051
19	SLU 91	0	0	0	-0.0032	0.0074	0.0065
19	SLU 92	0	0	0	-0.0026	0.0048	0.005
19	SLU 93	0	0	0	-0.0032	0.0048	0.0063
19	SLU 94	0	0	0	-0.0027	0.0059	0.0051
19	SLU 95	0	0	0	-0.0032	0.0059	0.0065
19	SLU 96	0	0	0	-0.0027	0.0067	0.0053
19	SLU 97	0	0	0	-0.0033	0.0067	0.0066
19	SLU 98	0	0	0	-0.0028	0.0078	0.0054
19	SLU 99	0	0	0	-0.0033	0.0078	0.0067
19	SLU 100	0	0	0	-0.0022	0.0008	0.0041
19	SLU 101	0	0	0	-0.0029	0.0008	0.0059
19	SLU 102	0	0	0	-0.003	0.0019	0.006
19	SLU 103	0	0	0	-0.0024	0.0036	0.0045
19	SLU 104	0	0	0	-0.0029	0.0036	0.0058
19	SLU 105	0	0	0	-0.0031	0.0027	0.0062
19	SLU 106	0	0	0	-0.0031	0.0039	0.0063
19	SLU 107	0	0	0	-0.0025	0.0056	0.0047
19	SLU 108	0	0	0	-0.003	0.0056	0.0061
19	SLU 109	0	0	0	-0.0025	0.0046	0.0047
19	SLU 110	0	0	0	-0.003	0.0046	0.006
19	SLU 111	0	0	0	-0.0025	0.0058	0.0048
19	SLU 112	0	0	0	-0.0031	0.0058	0.0061
19	SLU 113	0	0	0	-0.0031	0.0024	0.0063
19	SLU 114	0	0	0	-0.0032	0.0035	0.0064
19	SLU 115	0	0	0	-0.0025	0.0052	0.0048
19	SLU 116	0	0	0	-0.0031	0.0052	0.0061
19	SLU 117	0	0	0	-0.0032	0.0043	0.0065
19	SLU 118	0	0	0	-0.0033	0.0054	0.0067
19	SLU 119	0	0	0	-0.0026	0.0071	0.0051
19	SLU 120	0	0	0	-0.0032	0.0071	0.0064
19	SLU 121	0	0	0	-0.0026	0.0062	0.005
19	SLU 122	0	0	0	-0.0032	0.0062	0.0063
19	SLU 123	0	0	0	-0.0027	0.0074	0.0051
19	SLU 124	0	0	0	-0.0032	0.0074	0.0065

Nodo	Cont.	Spostamento			Rotazione		
Ind.	N.br.	ux	uy	uz	rx	ry	rz
19	SLU 125	0	0	0	-0.0026	0.0048	0.005
19	SLU 126	0	0	0	-0.0032	0.0048	0.0063
19	SLU 127	0	0	0	-0.0027	0.0059	0.0051
19	SLU 128	0	0	0	-0.0032	0.0059	0.0065
19	SLU 129	0	0	0	-0.0027	0.0067	0.0053
19	SLU 130	0	0	0	-0.0033	0.0067	0.0066
19	SLU 131	0	0	0	-0.0028	0.0078	0.0054
19	SLU 132	0	0	0	-0.0033	0.0078	0.0067
19	SLE RA 1	0	0	0	-0.0017	0.0006	0.0032
19	SLE RA 2	0	0	0	-0.0022	0.0006	0.0044
19	SLE RA 3	0	0	0	-0.0022	0.0014	0.0045
19	SLE RA 4	0	0	0	-0.0018	0.0025	0.0034
19	SLE RA 5	0	0	0	-0.0022	0.0025	0.0043
19	SLE RA 6	0	0	0	-0.0023	0.0019	0.0045
19	SLE RA 7	0	0	0	-0.0023	0.0027	0.0046
19	SLE RA 8	0	0	0	-0.0019	0.0038	0.0036
19	SLE RA 9	0	0	0	-0.0022	0.0038	0.0045
19	SLE RA 10	0	0	0	-0.0019	0.0032	0.0035
19	SLE RA 11	0	0	0	-0.0022	0.0032	0.0044
19	SLE RA 12	0	0	0	-0.0019	0.0039	0.0036
19	SLE RA 13	0	0	0	-0.0023	0.0039	0.0045
19	SLE RA 14	0	0	0	-0.0023	0.0017	0.0046
19	SLE RA 15	0	0	0	-0.0023	0.0024	0.0047
19	SLE RA 16	0	0	0	-0.0019	0.0036	0.0036
19	SLE RA 17	0	0	0	-0.0023	0.0036	0.0045
19	SLE RA 18	0	0	0	-0.0024	0.003	0.0048
19	SLE RA 19	0	0	0	-0.0024	0.0037	0.0049
19	SLE RA 20	0	0	0	-0.002	0.0048	0.0038
19	SLE RA 21	0	0	0	-0.0024	0.0048	0.0047
19	SLE RA 22	0	0	0	-0.002	0.0042	0.0038
19	SLE RA 23	0	0	0	-0.0023	0.0042	0.0047
19	SLE RA 24	0	0	0	-0.002	0.005	0.0038
19	SLE RA 25	0	0	0	-0.0024	0.005	0.0047
19	SLE RA 26	0	0	0	-0.002	0.0033	0.0037
19	SLE RA 27	0	0	0	-0.0023	0.0033	0.0046
19	SLE RA 28	0	0	0	-0.002	0.004	0.0038
19	SLE RA 29	0	0	0	-0.0024	0.004	0.0047
19	SLE RA 30	0	0	0	-0.002	0.0046	0.0039
19	SLE RA 31	0	0	0	-0.0024	0.0046	0.0048
19	SLE RA 32	0	0	0	-0.0021	0.0053	0.004
19	SLE RA 33	0	0	0	-0.0025	0.0053	0.0049
19	SLE FR 1	0	0	0	-0.0017	0.0006	0.0032
19	SLE FR 2	0	0	0	-0.0021	0.0006	0.0041
19	SLE FR 3	0	0	0	-0.0017	0.0014	0.0033
19	SLE FR 4	0	0	0	-0.0017	0.0011	0.0032
19	SLE FR 5	0	0	0	-0.0018	0.0017	0.0034
19	SLE QP 1	0	0	0	-0.0017	0.0006	0.0032
19	SLO 1	0	0	0	-0.0953	-0.0538	0.2217
19	SLO 2	0	0	0	-0.0953	-0.0538	0.2217
19	SLO 3	0	0	0	0.0972	-0.0538	-0.2278
19	SLO 4	0	0	0	0.0972	-0.0538	-0.2278
19	SLO 5	0	0	0	-0.3216	-0.0157	0.7505
19	SLO 6	0	0	0	-0.3216	-0.0157	0.7505
19	SLO 7	0	0	0	0.3198	-0.0157	-0.7479
19	SLO 8	0	0	0	0.3198	-0.0157	-0.7479
19	SLO 9	0	0	0	-0.3232	0.017	0.7543
19	SLO 10	0	0	0	-0.3232	0.017	0.7543
19	SLO 11	0	0	0	0.3182	0.017	-0.7442
19	SLO 12	0	0	0	0.3182	0.017	-0.7442
19	SLO 13	0	0	0	-0.1005	0.0551	0.2341
19	SLO 14	0	0	0	-0.1005	0.0551	0.2341
19	SLO 15	0	0	0	0.0919	0.0551	-0.2154
19	SLO 16	0	0	0	0.0919	0.0551	-0.2154
19	SLD 1	0	0	0	-0.0884	-0.0441	0.2058
19	SLD 2	0	0	0	-0.0884	-0.0441	0.2058
19	SLD 3	0	0	0	0.0894	-0.0441	-0.2096
19	SLD 4	0	0	0	0.0894	-0.0441	-0.2096
19	SLD 5	0	0	0	-0.2974	-0.0128	0.6939
19	SLD 6	0	0	0	-0.2974	-0.0128	0.6939
19	SLD 7	0	0	0	0.2953	-0.0128	-0.6906
19	SLD 8	0	0	0	0.2953	-0.0128	-0.6906
19	SLD 9	0	0	0	-0.2987	0.014	0.697
19	SLD 10	0	0	0	-0.2987	0.014	0.697
19	SLD 11	0	0	0	0.294	0.014	-0.6876
19	SLD 12	0	0	0	0.294	0.014	-0.6876
19	SLD 13	0	0	0	-0.0927	0.0453	0.2159
19	SLD 14	0	0	0	-0.0927	0.0453	0.2159
19	SLD 15	0	0	0	0.0851	0.0453	-0.1994
19	SLD 16	0	0	0	0.0851	0.0453	-0.1994
19	SLV 1	0	0	0	-0.2313	-0.0992	0.5396
19	SLV 2	0	0	0	-0.2313	-0.0992	0.5396
19	SLV 3	0	0	0	0.2376	-0.0992	-0.5559
19	SLV 4	0	0	0	0.2376	-0.0992	-0.5559
19	SLV 5	0	0	0	-0.7818	-0.0293	1.8257
19	SLV 6	0	0	0	-0.7818	-0.0293	1.8257
19	SLV 7	0	0	0	0.7813	-0.0293	-1.8261
19	SLV 8	0	0	0	0.7813	-0.0293	-1.8261
19	SLV 9	0	0	0	-0.7847	0.0306	1.8325
19	SLV 10	0	0	0	-0.7847	0.0306	1.8325
19	SLV 11	0	0	0	0.7785	0.0306	-1.8193
19	SLV 12	0	0	0	0.7785	0.0306	-1.8193
19	SLV 13	0	0	0	-0.241	0.1005	0.5623
19	SLV 14	0	0	0	-0.241	0.1005	0.5623
19	SLV 15	0	0	0	0.228	0.1005	-0.5333
19	SLV 16	0	0	0	0.228	0.1005	-0.5333

Nodo	Cont.	Spostamento			Rotazione		
Ind.	N.br.	ux	uy	uz	rx	ry	rz
20	SLU 1	0	0	0	-0.0025	-0.0006	-0.0037
20	SLU 2	0	0	0	-0.0025	-0.0006	-0.0037
20	SLU 3	0	0	0	-0.0025	-0.0018	-0.0036
20	SLU 4	0	0	0	-0.0025	-0.0035	-0.0036
20	SLU 5	0	0	0	-0.0025	-0.0035	-0.0036
20	SLU 6	0	0	0	-0.0026	-0.0024	-0.0037
20	SLU 7	0	0	0	-0.0026	-0.0035	-0.0037
20	SLU 8	0	0	0	-0.0026	-0.0052	-0.0037
20	SLU 9	0	0	0	-0.0026	-0.0052	-0.0037
20	SLU 10	0	0	0	-0.0026	-0.0042	-0.0037
20	SLU 11	0	0	0	-0.0026	-0.0042	-0.0038
20	SLU 12	0	0	0	-0.0026	-0.0053	-0.0037
20	SLU 13	0	0	0	-0.0026	-0.0053	-0.0037
20	SLU 14	0	0	0	-0.0027	-0.002	-0.0039
20	SLU 15	0	0	0	-0.0027	-0.0031	-0.0039
20	SLU 16	0	0	0	-0.0027	-0.0048	-0.0038
20	SLU 17	0	0	0	-0.0027	-0.0048	-0.0038
20	SLU 18	0	0	0	-0.0027	-0.0037	-0.0039
20	SLU 19	0	0	0	-0.0027	-0.0049	-0.0039
20	SLU 20	0	0	0	-0.0027	-0.0066	-0.0039
20	SLU 21	0	0	0	-0.0027	-0.0066	-0.0039
20	SLU 22	0	0	0	-0.0028	-0.0055	-0.004
20	SLU 23	0	0	0	-0.0028	-0.0055	-0.004
20	SLU 24	0	0	0	-0.0028	-0.0066	-0.004
20	SLU 25	0	0	0	-0.0028	-0.0066	-0.004
20	SLU 26	0	0	0	-0.0029	-0.004	-0.0042
20	SLU 27	0	0	0	-0.0029	-0.004	-0.0042
20	SLU 28	0	0	0	-0.0029	-0.0051	-0.0042
20	SLU 29	0	0	0	-0.0029	-0.0051	-0.0042
20	SLU 30	0	0	0	-0.0029	-0.0057	-0.0043
20	SLU 31	0	0	0	-0.0029	-0.0057	-0.0043
20	SLU 32	0	0	0	-0.0029	-0.0069	-0.0043
20	SLU 33	0	0	0	-0.0029	-0.0069	-0.0043
20	SLU 34	0	0	0	-0.0025	-0.0006	-0.0037
20	SLU 35	0	0	0	-0.0025	-0.0006	-0.0037
20	SLU 36	0	0	0	-0.0025	-0.0018	-0.0036
20	SLU 37	0	0	0	-0.0025	-0.0035	-0.0036
20	SLU 38	0	0	0	-0.0025	-0.0035	-0.0036
20	SLU 39	0	0	0	-0.0026	-0.0024	-0.0037
20	SLU 40	0	0	0	-0.0026	-0.0035	-0.0037
20	SLU 41	0	0	0	-0.0026	-0.0052	-0.0037
20	SLU 42	0	0	0	-0.0026	-0.0052	-0.0037
20	SLU 43	0	0	0	-0.0026	-0.0042	-0.0037
20	SLU 44	0	0	0	-0.0026	-0.0042	-0.0038
20	SLU 45	0	0	0	-0.0026	-0.0053	-0.0037
20	SLU 46	0	0	0	-0.0026	-0.0053	-0.0037
20	SLU 47	0	0	0	-0.0027	-0.002	-0.0039
20	SLU 48	0	0	0	-0.0027	-0.0031	-0.0039
20	SLU 49	0	0	0	-0.0027	-0.0048	-0.0038
20	SLU 50	0	0	0	-0.0027	-0.0048	-0.0038
20	SLU 51	0	0	0	-0.0027	-0.0037	-0.0039
20	SLU 52	0	0	0	-0.0027	-0.0049	-0.0039
20	SLU 53	0	0	0	-0.0027	-0.0066	-0.0039
20	SLU 54	0	0	0	-0.0027	-0.0066	-0.0039
20	SLU 55	0	0	0	-0.0028	-0.0055	-0.004
20	SLU 56	0	0	0	-0.0028	-0.0055	-0.004
20	SLU 57	0	0	0	-0.0028	-0.0066	-0.004
20	SLU 58	0	0	0	-0.0028	-0.0066	-0.004
20	SLU 59	0	0	0	-0.0029	-0.004	-0.0042
20	SLU 60	0	0	0	-0.0029	-0.004	-0.0042
20	SLU 61	0	0	0	-0.0029	-0.0051	-0.0042
20	SLU 62	0	0	0	-0.0029	-0.0051	-0.0042
20	SLU 63	0	0	0	-0.0029	-0.0057	-0.0043
20	SLU 64	0	0	0	-0.0029	-0.0057	-0.0043
20	SLU 65	0	0	0	-0.0029	-0.0069	-0.0043
20	SLU 66	0	0	0	-0.0029	-0.0069	-0.0043
20	SLU 67	0	0	0	-0.0033	-0.0008	-0.0047
20	SLU 68	0	0	0	-0.0033	-0.0008	-0.0048
20	SLU 69	0	0	0	-0.0033	-0.002	-0.0047
20	SLU 70	0	0	0	-0.0033	-0.0037	-0.0047
20	SLU 71	0	0	0	-0.0033	-0.0037	-0.0047
20	SLU 72	0	0	0	-0.0033	-0.0026	-0.0048
20	SLU 73	0	0	0	-0.0034	-0.0037	-0.0048
20	SLU 74	0	0	0	-0.0034	-0.0054	-0.0047
20	SLU 75	0	0	0	-0.0034	-0.0054	-0.0048
20	SLU 76	0	0	0	-0.0034	-0.0043	-0.0048
20	SLU 77	0	0	0	-0.0034	-0.0043	-0.0049
20	SLU 78	0	0	0	-0.0034	-0.0055	-0.0048
20	SLU 79	0	0	0	-0.0034	-0.0055	-0.0048
20	SLU 80	0	0	0	-0.0034	-0.0022	-0.005
20	SLU 81	0	0	0	-0.0034	-0.0033	-0.005
20	SLU 82	0	0	0	-0.0034	-0.005	-0.0049
20	SLU 83	0	0	0	-0.0034	-0.005	-0.0049
20	SLU 84	0	0	0	-0.0035	-0.0039	-0.005
20	SLU 85	0	0	0	-0.0035	-0.0051	-0.005
20	SLU 86	0	0	0	-0.0035	-0.0068	-0.005
20	SLU 87	0	0	0	-0.0035	-0.0068	-0.005
20	SLU 88	0	0	0	-0.0035	-0.0057	-0.0051
20	SLU 89	0	0	0	-0.0035	-0.0057	-0.0051
20	SLU 90	0	0	0	-0.0035	-0.0068	-0.0051
20	SLU 91	0	0	0	-0.0035	-0.0068	-0.0051
20	SLU 92	0	0	0	-0.0036	-0.0042	-0.0053
20	SLU 93	0	0	0	-0.0036	-0.0042	-0.0053
20	SLU 94	0	0	0	-0.0036	-0.0053	-0.0053
20	SLU 95	0	0	0	-0.0036	-0.0053	-0.0053

Nodo	Cont.	Spostamento			Rotazione		
Ind.	N.br.	ux	uy	uz	rx	ry	rz
20	SLU 96	0	0	0	-0.0037	-0.0059	-0.0054
20	SLU 97	0	0	0	-0.0037	-0.0059	-0.0054
20	SLU 98	0	0	0	-0.0037	-0.0071	-0.0054
20	SLU 99	0	0	0	-0.0037	-0.0071	-0.0054
20	SLU 100	0	0	0	-0.0033	-0.0008	-0.0047
20	SLU 101	0	0	0	-0.0033	-0.0008	-0.0048
20	SLU 102	0	0	0	-0.0033	-0.002	-0.0047
20	SLU 103	0	0	0	-0.0033	-0.0037	-0.0047
20	SLU 104	0	0	0	-0.0033	-0.0037	-0.0047
20	SLU 105	0	0	0	-0.0033	-0.0026	-0.0048
20	SLU 106	0	0	0	-0.0034	-0.0037	-0.0048
20	SLU 107	0	0	0	-0.0034	-0.0054	-0.0047
20	SLU 108	0	0	0	-0.0034	-0.0054	-0.0048
20	SLU 109	0	0	0	-0.0034	-0.0043	-0.0048
20	SLU 110	0	0	0	-0.0034	-0.0043	-0.0049
20	SLU 111	0	0	0	-0.0034	-0.0055	-0.0048
20	SLU 112	0	0	0	-0.0034	-0.0055	-0.0048
20	SLU 113	0	0	0	-0.0034	-0.0022	-0.005
20	SLU 114	0	0	0	-0.0034	-0.0033	-0.005
20	SLU 115	0	0	0	-0.0034	-0.005	-0.0049
20	SLU 116	0	0	0	-0.0034	-0.005	-0.0049
20	SLU 117	0	0	0	-0.0035	-0.0039	-0.005
20	SLU 118	0	0	0	-0.0035	-0.0051	-0.005
20	SLU 119	0	0	0	-0.0035	-0.0068	-0.005
20	SLU 120	0	0	0	-0.0035	-0.0068	-0.005
20	SLU 121	0	0	0	-0.0035	-0.0057	-0.0051
20	SLU 122	0	0	0	-0.0035	-0.0057	-0.0051
20	SLU 123	0	0	0	-0.0035	-0.0068	-0.0051
20	SLU 124	0	0	0	-0.0035	-0.0068	-0.0051
20	SLU 125	0	0	0	-0.0036	-0.0042	-0.0053
20	SLU 126	0	0	0	-0.0036	-0.0042	-0.0053
20	SLU 127	0	0	0	-0.0036	-0.0053	-0.0053
20	SLU 128	0	0	0	-0.0036	-0.0053	-0.0053
20	SLU 129	0	0	0	-0.0037	-0.0059	-0.0054
20	SLU 130	0	0	0	-0.0037	-0.0059	-0.0054
20	SLU 131	0	0	0	-0.0037	-0.0071	-0.0054
20	SLU 132	0	0	0	-0.0037	-0.0071	-0.0054
20	SLE RA 1	0	0	0	-0.0025	-0.0006	-0.0037
20	SLE RA 2	0	0	0	-0.0025	-0.0006	-0.0037
20	SLE RA 3	0	0	0	-0.0025	-0.0014	-0.0036
20	SLE RA 4	0	0	0	-0.0025	-0.0025	-0.0036
20	SLE RA 5	0	0	0	-0.0025	-0.0025	-0.0036
20	SLE RA 6	0	0	0	-0.0026	-0.0018	-0.0037
20	SLE RA 7	0	0	0	-0.0026	-0.0026	-0.0037
20	SLE RA 8	0	0	0	-0.0026	-0.0037	-0.0037
20	SLE RA 9	0	0	0	-0.0026	-0.0037	-0.0037
20	SLE RA 10	0	0	0	-0.0026	-0.003	-0.0037
20	SLE RA 11	0	0	0	-0.0026	-0.003	-0.0037
20	SLE RA 12	0	0	0	-0.0026	-0.0037	-0.0037
20	SLE RA 13	0	0	0	-0.0026	-0.0037	-0.0037
20	SLE RA 14	0	0	0	-0.0026	-0.0015	-0.0038
20	SLE RA 15	0	0	0	-0.0026	-0.0023	-0.0038
20	SLE RA 16	0	0	0	-0.0026	-0.0034	-0.0038
20	SLE RA 17	0	0	0	-0.0026	-0.0034	-0.0038
20	SLE RA 18	0	0	0	-0.0027	-0.0027	-0.0038
20	SLE RA 19	0	0	0	-0.0027	-0.0035	-0.0038
20	SLE RA 20	0	0	0	-0.0027	-0.0046	-0.0038
20	SLE RA 21	0	0	0	-0.0027	-0.0046	-0.0038
20	SLE RA 22	0	0	0	-0.0027	-0.0039	-0.0039
20	SLE RA 23	0	0	0	-0.0027	-0.0039	-0.0039
20	SLE RA 24	0	0	0	-0.0027	-0.0046	-0.0039
20	SLE RA 25	0	0	0	-0.0027	-0.0046	-0.0039
20	SLE RA 26	0	0	0	-0.0028	-0.0029	-0.004
20	SLE RA 27	0	0	0	-0.0028	-0.0029	-0.004
20	SLE RA 28	0	0	0	-0.0028	-0.0036	-0.004
20	SLE RA 29	0	0	0	-0.0028	-0.0036	-0.004
20	SLE RA 30	0	0	0	-0.0028	-0.004	-0.0041
20	SLE RA 31	0	0	0	-0.0028	-0.004	-0.0041
20	SLE RA 32	0	0	0	-0.0028	-0.0048	-0.0041
20	SLE RA 33	0	0	0	-0.0028	-0.0048	-0.0041
20	SLE FR 1	0	0	0	-0.0025	-0.0006	-0.0037
20	SLE FR 2	0	0	0	-0.0025	-0.0006	-0.0037
20	SLE FR 3	0	0	0	-0.0025	-0.0014	-0.0036
20	SLE FR 4	0	0	0	-0.0025	-0.0011	-0.0037
20	SLE FR 5	0	0	0	-0.0026	-0.0015	-0.0038
20	SLE QP 1	0	0	0	-0.0025	-0.0006	-0.0037
20	SLO 1	0	0	0	-0.0987	-0.0552	-0.2283
20	SLO 2	0	0	0	-0.0987	-0.0552	-0.2283
20	SLO 3	0	0	0	0.0938	-0.0552	0.2213
20	SLO 4	0	0	0	0.0938	-0.0552	0.2213
20	SLO 5	0	0	0	-0.3233	-0.017	-0.7529
20	SLO 6	0	0	0	-0.3233	-0.017	-0.7529
20	SLO 7	0	0	0	0.3182	-0.017	0.7457
20	SLO 8	0	0	0	0.3182	-0.017	0.7457
20	SLO 9	0	0	0	-0.3233	0.0157	-0.753
20	SLO 10	0	0	0	-0.3233	0.0157	-0.753
20	SLO 11	0	0	0	0.3182	0.0157	0.7456
20	SLO 12	0	0	0	0.3182	0.0157	0.7456
20	SLO 13	0	0	0	-0.0988	0.0539	-0.2286
20	SLO 14	0	0	0	-0.0988	0.0539	-0.2286
20	SLO 15	0	0	0	0.0936	0.0539	0.221
20	SLO 16	0	0	0	0.0936	0.0539	0.221
20	SLD 1	0	0	0	-0.0914	-0.0454	-0.2113
20	SLD 2	0	0	0	-0.0914	-0.0454	-0.2113
20	SLD 3	0	0	0	0.0864	-0.0454	0.2042

Nodo	Cont.	Spostamento			Rotazione		
Ind.	N.br.	ux	uy	uz	rx	ry	rz
20	SLD 4	0	0	0	0.0864	-0.0454	0.2042
20	SLD 5	0	0	0	-0.2989	-0.0141	-0.696
20	SLD 6	0	0	0	-0.2989	-0.0141	-0.696
20	SLD 7	0	0	0	0.2939	-0.0141	0.6887
20	SLD 8	0	0	0	0.2939	-0.0141	0.6887
20	SLD 9	0	0	0	-0.2989	0.0128	-0.696
20	SLD 10	0	0	0	-0.2989	0.0128	-0.696
20	SLD 11	0	0	0	0.2938	0.0128	0.6887
20	SLD 12	0	0	0	0.2938	0.0128	0.6887
20	SLD 13	0	0	0	-0.0915	0.0441	-0.2115
20	SLD 14	0	0	0	-0.0915	0.0441	-0.2115
20	SLD 15	0	0	0	0.0863	0.0441	0.204
20	SLD 16	0	0	0	0.0863	0.0441	0.204
20	SLV 1	0	0	0	-0.2369	-0.1006	-0.5513
20	SLV 2	0	0	0	-0.2369	-0.1006	-0.5513
20	SLV 3	0	0	0	0.2321	-0.1006	0.5444
20	SLV 4	0	0	0	0.2321	-0.1006	0.5444
20	SLV 5	0	0	0	-0.7842	-0.0306	-1.8297
20	SLV 6	0	0	0	-0.7842	-0.0306	-1.8297
20	SLV 7	0	0	0	0.7792	-0.0306	1.8225
20	SLV 8	0	0	0	0.7792	-0.0306	1.8225
20	SLV 9	0	0	0	-0.7842	0.0294	-1.8298
20	SLV 10	0	0	0	-0.7842	0.0294	-1.8298
20	SLV 11	0	0	0	0.7791	0.0294	1.8224
20	SLV 12	0	0	0	0.7791	0.0294	1.8224
20	SLV 13	0	0	0	-0.2371	0.0993	-0.5517
20	SLV 14	0	0	0	-0.2371	0.0993	-0.5517
20	SLV 15	0	0	0	0.2319	0.0993	0.5439
20	SLV 16	0	0	0	0.2319	0.0993	0.5439
21	SLU 1	0	0	0	-0.0025	0.0006	0.0037
21	SLU 2	0	0	0	-0.0025	0.0006	0.0037
21	SLU 3	0	0	0	-0.0025	0.0018	0.0036
21	SLU 4	0	0	0	-0.0025	0.0035	0.0036
21	SLU 5	0	0	0	-0.0025	0.0035	0.0036
21	SLU 6	0	0	0	-0.0026	0.0025	0.0037
21	SLU 7	0	0	0	-0.0026	0.0036	0.0037
21	SLU 8	0	0	0	-0.0026	0.0053	0.0036
21	SLU 9	0	0	0	-0.0026	0.0053	0.0037
21	SLU 10	0	0	0	-0.0026	0.0044	0.0037
21	SLU 11	0	0	0	-0.0026	0.0044	0.0037
21	SLU 12	0	0	0	-0.0026	0.0055	0.0037
21	SLU 13	0	0	0	-0.0026	0.0055	0.0037
21	SLU 14	0	0	0	-0.0027	0.0021	0.0039
21	SLU 15	0	0	0	-0.0027	0.0033	0.0039
21	SLU 16	0	0	0	-0.0027	0.005	0.0038
21	SLU 17	0	0	0	-0.0027	0.005	0.0038
21	SLU 18	0	0	0	-0.0027	0.004	0.0039
21	SLU 19	0	0	0	-0.0027	0.0051	0.0039
21	SLU 20	0	0	0	-0.0027	0.0068	0.0039
21	SLU 21	0	0	0	-0.0027	0.0068	0.0039
21	SLU 22	0	0	0	-0.0028	0.0059	0.0039
21	SLU 23	0	0	0	-0.0028	0.0059	0.0039
21	SLU 24	0	0	0	-0.0028	0.007	0.0039
21	SLU 25	0	0	0	-0.0028	0.007	0.0039
21	SLU 26	0	0	0	-0.0028	0.0044	0.0042
21	SLU 27	0	0	0	-0.0029	0.0044	0.0042
21	SLU 28	0	0	0	-0.0029	0.0055	0.0042
21	SLU 29	0	0	0	-0.0029	0.0055	0.0042
21	SLU 30	0	0	0	-0.0029	0.0063	0.0042
21	SLU 31	0	0	0	-0.0029	0.0063	0.0042
21	SLU 32	0	0	0	-0.0029	0.0074	0.0042
21	SLU 33	0	0	0	-0.0029	0.0074	0.0042
21	SLU 34	0	0	0	-0.0025	0.0006	0.0037
21	SLU 35	0	0	0	-0.0025	0.0006	0.0037
21	SLU 36	0	0	0	-0.0025	0.0018	0.0036
21	SLU 37	0	0	0	-0.0025	0.0035	0.0036
21	SLU 38	0	0	0	-0.0025	0.0035	0.0036
21	SLU 39	0	0	0	-0.0026	0.0025	0.0037
21	SLU 40	0	0	0	-0.0026	0.0036	0.0037
21	SLU 41	0	0	0	-0.0026	0.0053	0.0036
21	SLU 42	0	0	0	-0.0026	0.0053	0.0037
21	SLU 43	0	0	0	-0.0026	0.0044	0.0037
21	SLU 44	0	0	0	-0.0026	0.0044	0.0037
21	SLU 45	0	0	0	-0.0026	0.0055	0.0037
21	SLU 46	0	0	0	-0.0026	0.0055	0.0037
21	SLU 47	0	0	0	-0.0027	0.0021	0.0039
21	SLU 48	0	0	0	-0.0027	0.0033	0.0039
21	SLU 49	0	0	0	-0.0027	0.005	0.0038
21	SLU 50	0	0	0	-0.0027	0.005	0.0038
21	SLU 51	0	0	0	-0.0027	0.004	0.0039
21	SLU 52	0	0	0	-0.0027	0.0051	0.0039
21	SLU 53	0	0	0	-0.0027	0.0068	0.0039
21	SLU 54	0	0	0	-0.0027	0.0068	0.0039
21	SLU 55	0	0	0	-0.0028	0.0059	0.0039
21	SLU 56	0	0	0	-0.0028	0.0059	0.0039
21	SLU 57	0	0	0	-0.0028	0.007	0.0039
21	SLU 58	0	0	0	-0.0028	0.007	0.0039
21	SLU 59	0	0	0	-0.0028	0.0044	0.0042
21	SLU 60	0	0	0	-0.0029	0.0044	0.0042
21	SLU 61	0	0	0	-0.0029	0.0055	0.0042
21	SLU 62	0	0	0	-0.0029	0.0055	0.0042
21	SLU 63	0	0	0	-0.0029	0.0063	0.0042
21	SLU 64	0	0	0	-0.0029	0.0063	0.0042
21	SLU 65	0	0	0	-0.0029	0.0074	0.0042
21	SLU 66	0	0	0	-0.0029	0.0074	0.0042

Nodo	Cont.	Spostamento			Rotazione		
Ind.	N.br.	ux	uy	uz	rx	ry	rz
21	SLU 67	0	0	0	-0.0033	0.0008	0.0047
21	SLU 68	0	0	0	-0.0033	0.0008	0.0048
21	SLU 69	0	0	0	-0.0033	0.002	0.0047
21	SLU 70	0	0	0	-0.0033	0.0037	0.0047
21	SLU 71	0	0	0	-0.0033	0.0037	0.0047
21	SLU 72	0	0	0	-0.0033	0.0027	0.0048
21	SLU 73	0	0	0	-0.0033	0.0038	0.0048
21	SLU 74	0	0	0	-0.0033	0.0055	0.0047
21	SLU 75	0	0	0	-0.0034	0.0055	0.0047
21	SLU 76	0	0	0	-0.0034	0.0045	0.0048
21	SLU 77	0	0	0	-0.0034	0.0045	0.0048
21	SLU 78	0	0	0	-0.0034	0.0057	0.0048
21	SLU 79	0	0	0	-0.0034	0.0057	0.0048
21	SLU 80	0	0	0	-0.0034	0.0023	0.005
21	SLU 81	0	0	0	-0.0034	0.0035	0.005
21	SLU 82	0	0	0	-0.0034	0.0052	0.0049
21	SLU 83	0	0	0	-0.0034	0.0052	0.0049
21	SLU 84	0	0	0	-0.0035	0.0042	0.005
21	SLU 85	0	0	0	-0.0035	0.0053	0.005
21	SLU 86	0	0	0	-0.0035	0.007	0.0049
21	SLU 87	0	0	0	-0.0035	0.007	0.005
21	SLU 88	0	0	0	-0.0035	0.0061	0.005
21	SLU 89	0	0	0	-0.0035	0.0061	0.005
21	SLU 90	0	0	0	-0.0035	0.0072	0.005
21	SLU 91	0	0	0	-0.0035	0.0072	0.005
21	SLU 92	0	0	0	-0.0036	0.0046	0.0053
21	SLU 93	0	0	0	-0.0036	0.0046	0.0053
21	SLU 94	0	0	0	-0.0036	0.0057	0.0053
21	SLU 95	0	0	0	-0.0036	0.0057	0.0053
21	SLU 96	0	0	0	-0.0037	0.0065	0.0053
21	SLU 97	0	0	0	-0.0037	0.0065	0.0053
21	SLU 98	0	0	0	-0.0037	0.0076	0.0053
21	SLU 99	0	0	0	-0.0037	0.0076	0.0053
21	SLU 100	0	0	0	-0.0033	0.0008	0.0047
21	SLU 101	0	0	0	-0.0033	0.0008	0.0048
21	SLU 102	0	0	0	-0.0033	0.002	0.0047
21	SLU 103	0	0	0	-0.0033	0.0037	0.0047
21	SLU 104	0	0	0	-0.0033	0.0037	0.0047
21	SLU 105	0	0	0	-0.0033	0.0027	0.0048
21	SLU 106	0	0	0	-0.0033	0.0038	0.0048
21	SLU 107	0	0	0	-0.0033	0.0055	0.0047
21	SLU 108	0	0	0	-0.0034	0.0055	0.0047
21	SLU 109	0	0	0	-0.0034	0.0045	0.0048
21	SLU 110	0	0	0	-0.0034	0.0045	0.0048
21	SLU 111	0	0	0	-0.0034	0.0057	0.0048
21	SLU 112	0	0	0	-0.0034	0.0057	0.0048
21	SLU 113	0	0	0	-0.0034	0.0023	0.005
21	SLU 114	0	0	0	-0.0034	0.0035	0.005
21	SLU 115	0	0	0	-0.0034	0.0052	0.0049
21	SLU 116	0	0	0	-0.0034	0.0052	0.0049
21	SLU 117	0	0	0	-0.0035	0.0042	0.005
21	SLU 118	0	0	0	-0.0035	0.0053	0.005
21	SLU 119	0	0	0	-0.0035	0.007	0.0049
21	SLU 120	0	0	0	-0.0035	0.007	0.005
21	SLU 121	0	0	0	-0.0035	0.0061	0.005
21	SLU 122	0	0	0	-0.0035	0.0061	0.005
21	SLU 123	0	0	0	-0.0035	0.0072	0.005
21	SLU 124	0	0	0	-0.0035	0.0072	0.005
21	SLU 125	0	0	0	-0.0036	0.0046	0.0053
21	SLU 126	0	0	0	-0.0036	0.0046	0.0053
21	SLU 127	0	0	0	-0.0036	0.0057	0.0053
21	SLU 128	0	0	0	-0.0036	0.0057	0.0053
21	SLU 129	0	0	0	-0.0037	0.0065	0.0053
21	SLU 130	0	0	0	-0.0037	0.0065	0.0053
21	SLU 131	0	0	0	-0.0037	0.0076	0.0053
21	SLU 132	0	0	0	-0.0037	0.0076	0.0053
21	SLE RA 1	0	0	0	-0.0025	0.0006	0.0037
21	SLE RA 2	0	0	0	-0.0025	0.0006	0.0037
21	SLE RA 3	0	0	0	-0.0025	0.0014	0.0036
21	SLE RA 4	0	0	0	-0.0025	0.0025	0.0036
21	SLE RA 5	0	0	0	-0.0025	0.0025	0.0036
21	SLE RA 6	0	0	0	-0.0026	0.0019	0.0037
21	SLE RA 7	0	0	0	-0.0026	0.0026	0.0037
21	SLE RA 8	0	0	0	-0.0026	0.0038	0.0036
21	SLE RA 9	0	0	0	-0.0026	0.0038	0.0037
21	SLE RA 10	0	0	0	-0.0026	0.0031	0.0037
21	SLE RA 11	0	0	0	-0.0026	0.0031	0.0037
21	SLE RA 12	0	0	0	-0.0026	0.0039	0.0037
21	SLE RA 13	0	0	0	-0.0026	0.0039	0.0037
21	SLE RA 14	0	0	0	-0.0026	0.0016	0.0038
21	SLE RA 15	0	0	0	-0.0026	0.0024	0.0038
21	SLE RA 16	0	0	0	-0.0026	0.0035	0.0038
21	SLE RA 17	0	0	0	-0.0026	0.0035	0.0038
21	SLE RA 18	0	0	0	-0.0026	0.0029	0.0038
21	SLE RA 19	0	0	0	-0.0027	0.0036	0.0038
21	SLE RA 20	0	0	0	-0.0027	0.0048	0.0038
21	SLE RA 21	0	0	0	-0.0027	0.0048	0.0038
21	SLE RA 22	0	0	0	-0.0027	0.0041	0.0038
21	SLE RA 23	0	0	0	-0.0027	0.0041	0.0038
21	SLE RA 24	0	0	0	-0.0027	0.0049	0.0038
21	SLE RA 25	0	0	0	-0.0027	0.0049	0.0038
21	SLE RA 26	0	0	0	-0.0027	0.0031	0.004
21	SLE RA 27	0	0	0	-0.0027	0.0031	0.004
21	SLE RA 28	0	0	0	-0.0027	0.0039	0.004
21	SLE RA 29	0	0	0	-0.0027	0.0039	0.004

Nodo	Cont.	Spostamento			Rotazione		
Ind.	N.br.	ux	uy	uz	rx	ry	rz
21	SLE RA 30	0	0	0	-0.0028	0.0044	0.004
21	SLE RA 31	0	0	0	-0.0028	0.0044	0.004
21	SLE RA 32	0	0	0	-0.0028	0.0051	0.004
21	SLE RA 33	0	0	0	-0.0028	0.0051	0.004
21	SLE FR 1	0	0	0	-0.0025	0.0006	0.0037
21	SLE FR 2	0	0	0	-0.0025	0.0006	0.0037
21	SLE FR 3	0	0	0	-0.0025	0.0014	0.0036
21	SLE FR 4	0	0	0	-0.0025	0.0011	0.0037
21	SLE FR 5	0	0	0	-0.0026	0.0016	0.0038
21	SLE QP 1	0	0	0	-0.0025	0.0006	0.0037
21	SLO 1	0	0	0	-0.0988	-0.0539	0.2286
21	SLO 2	0	0	0	-0.0988	-0.0539	0.2286
21	SLO 3	0	0	0	0.0936	-0.0539	-0.221
21	SLO 4	0	0	0	0.0936	-0.0539	-0.221
21	SLO 5	0	0	0	-0.3233	-0.0157	0.753
21	SLO 6	0	0	0	-0.3233	-0.0157	0.753
21	SLO 7	0	0	0	0.3182	-0.0157	-0.7456
21	SLO 8	0	0	0	0.3182	-0.0157	-0.7456
21	SLO 9	0	0	0	-0.3233	0.017	0.7529
21	SLO 10	0	0	0	-0.3233	0.017	0.7529
21	SLO 11	0	0	0	0.3182	0.017	-0.7457
21	SLO 12	0	0	0	0.3182	0.017	-0.7457
21	SLO 13	0	0	0	-0.0987	0.0552	0.2283
21	SLO 14	0	0	0	-0.0987	0.0552	0.2283
21	SLO 15	0	0	0	0.0938	0.0552	-0.2213
21	SLO 16	0	0	0	0.0938	0.0552	-0.2213
21	SLD 1	0	0	0	-0.0915	-0.0441	0.2115
21	SLD 2	0	0	0	-0.0915	-0.0441	0.2115
21	SLD 3	0	0	0	0.0863	-0.0441	-0.204
21	SLD 4	0	0	0	0.0863	-0.0441	-0.204
21	SLD 5	0	0	0	-0.2989	-0.0128	0.696
21	SLD 6	0	0	0	-0.2989	-0.0128	0.696
21	SLD 7	0	0	0	0.2938	-0.0128	-0.6887
21	SLD 8	0	0	0	0.2938	-0.0128	-0.6887
21	SLD 9	0	0	0	-0.2989	0.0141	0.696
21	SLD 10	0	0	0	-0.2989	0.0141	0.696
21	SLD 11	0	0	0	0.2939	0.0141	-0.6887
21	SLD 12	0	0	0	0.2939	0.0141	-0.6887
21	SLD 13	0	0	0	-0.0914	0.0454	0.2113
21	SLD 14	0	0	0	-0.0914	0.0454	0.2113
21	SLD 15	0	0	0	0.0864	0.0454	-0.2042
21	SLD 16	0	0	0	0.0864	0.0454	-0.2042
21	SLV 1	0	0	0	-0.2371	-0.0993	0.5517
21	SLV 2	0	0	0	-0.2371	-0.0993	0.5517
21	SLV 3	0	0	0	0.2319	-0.0993	-0.5439
21	SLV 4	0	0	0	0.2319	-0.0993	-0.5439
21	SLV 5	0	0	0	-0.7842	-0.0294	1.8298
21	SLV 6	0	0	0	-0.7842	-0.0294	1.8298
21	SLV 7	0	0	0	0.7791	-0.0294	-1.8224
21	SLV 8	0	0	0	0.7791	-0.0294	-1.8224
21	SLV 9	0	0	0	-0.7842	0.0306	1.8297
21	SLV 10	0	0	0	-0.7842	0.0306	1.8297
21	SLV 11	0	0	0	0.7792	0.0306	-1.8225
21	SLV 12	0	0	0	0.7792	0.0306	-1.8225
21	SLV 13	0	0	0	-0.2369	0.1006	0.5513
21	SLV 14	0	0	0	-0.2369	0.1006	0.5513
21	SLV 15	0	0	0	0.2321	0.1006	-0.5444
21	SLV 16	0	0	0	0.2321	0.1006	-0.5444
22	SLU 1	0	0	0	-0.0057	0	-0.007
22	SLU 2	0	0	0	-0.0057	0	-0.0071
22	SLU 3	0	0	0	-0.0058	-0.0006	-0.0071
22	SLU 4	0	0	0	-0.0059	-0.0014	-0.0072
22	SLU 5	0	0	0	-0.0059	-0.0014	-0.0072
22	SLU 6	0	0	0	-0.0059	-0.0009	-0.0073
22	SLU 7	0	0	0	-0.006	-0.0014	-0.0073
22	SLU 8	0	0	0	-0.0061	-0.0023	-0.0074
22	SLU 9	0	0	0	-0.0061	-0.0023	-0.0074
22	SLU 10	0	0	0	-0.0061	-0.0017	-0.0075
22	SLU 11	0	0	0	-0.0061	-0.0017	-0.0075
22	SLU 12	0	0	0	-0.0062	-0.0023	-0.0076
22	SLU 13	0	0	0	-0.0062	-0.0023	-0.0076
22	SLU 14	0	0	0	-0.006	-0.0006	-0.0075
22	SLU 15	0	0	0	-0.0061	-0.0012	-0.0075
22	SLU 16	0	0	0	-0.0062	-0.002	-0.0076
22	SLU 17	0	0	0	-0.0062	-0.002	-0.0076
22	SLU 18	0	0	0	-0.0062	-0.0015	-0.0077
22	SLU 19	0	0	0	-0.0063	-0.0021	-0.0078
22	SLU 20	0	0	0	-0.0064	-0.0029	-0.0078
22	SLU 21	0	0	0	-0.0064	-0.0029	-0.0079
22	SLU 22	0	0	0	-0.0064	-0.0023	-0.0079
22	SLU 23	0	0	0	-0.0064	-0.0023	-0.0079
22	SLU 24	0	0	0	-0.0065	-0.0029	-0.008
22	SLU 25	0	0	0	-0.0065	-0.0029	-0.008
22	SLU 26	0	0	0	-0.0064	-0.0016	-0.0081
22	SLU 27	0	0	0	-0.0064	-0.0016	-0.0081
22	SLU 28	0	0	0	-0.0065	-0.0021	-0.0082
22	SLU 29	0	0	0	-0.0065	-0.0021	-0.0082
22	SLU 30	0	0	0	-0.0066	-0.0024	-0.0084
22	SLU 31	0	0	0	-0.0066	-0.0024	-0.0084
22	SLU 32	0	0	0	-0.0067	-0.003	-0.0084
22	SLU 33	0	0	0	-0.0067	-0.003	-0.0084
22	SLU 34	0	0	0	-0.0057	0	-0.007
22	SLU 35	0	0	0	-0.0057	0	-0.0071
22	SLU 36	0	0	0	-0.0058	-0.0006	-0.0071
22	SLU 37	0	0	0	-0.0059	-0.0014	-0.0072

Nodo	Cont.	Spostamento			Rotazione		
Ind.	N.br.	ux	uy	uz	rx	ry	rz
22	SLU 38	0	0	0	-0.0059	-0.0014	-0.0072
22	SLU 39	0	0	0	-0.0059	-0.0009	-0.0073
22	SLU 40	0	0	0	-0.006	-0.0014	-0.0073
22	SLU 41	0	0	0	-0.0061	-0.0023	-0.0074
22	SLU 42	0	0	0	-0.0061	-0.0023	-0.0074
22	SLU 43	0	0	0	-0.0061	-0.0017	-0.0075
22	SLU 44	0	0	0	-0.0061	-0.0017	-0.0075
22	SLU 45	0	0	0	-0.0062	-0.0023	-0.0076
22	SLU 46	0	0	0	-0.0062	-0.0023	-0.0076
22	SLU 47	0	0	0	-0.006	-0.0006	-0.0075
22	SLU 48	0	0	0	-0.0061	-0.0012	-0.0075
22	SLU 49	0	0	0	-0.0062	-0.002	-0.0076
22	SLU 50	0	0	0	-0.0062	-0.002	-0.0076
22	SLU 51	0	0	0	-0.0062	-0.0015	-0.0077
22	SLU 52	0	0	0	-0.0063	-0.0021	-0.0078
22	SLU 53	0	0	0	-0.0064	-0.0029	-0.0078
22	SLU 54	0	0	0	-0.0064	-0.0029	-0.0079
22	SLU 55	0	0	0	-0.0064	-0.0023	-0.0079
22	SLU 56	0	0	0	-0.0064	-0.0023	-0.0079
22	SLU 57	0	0	0	-0.0065	-0.0029	-0.008
22	SLU 58	0	0	0	-0.0065	-0.0029	-0.008
22	SLU 59	0	0	0	-0.0064	-0.0016	-0.0081
22	SLU 60	0	0	0	-0.0064	-0.0016	-0.0081
22	SLU 61	0	0	0	-0.0065	-0.0021	-0.0082
22	SLU 62	0	0	0	-0.0065	-0.0021	-0.0082
22	SLU 63	0	0	0	-0.0066	-0.0024	-0.0084
22	SLU 64	0	0	0	-0.0066	-0.0024	-0.0084
22	SLU 65	0	0	0	-0.0067	-0.003	-0.0084
22	SLU 66	0	0	0	-0.0067	-0.003	-0.0084
22	SLU 67	0	0	0	-0.0074	0	-0.0092
22	SLU 68	0	0	0	-0.0074	0	-0.0092
22	SLU 69	0	0	0	-0.0075	-0.0006	-0.0092
22	SLU 70	0	0	0	-0.0076	-0.0014	-0.0093
22	SLU 71	0	0	0	-0.0076	-0.0014	-0.0093
22	SLU 72	0	0	0	-0.0076	-0.0009	-0.0094
22	SLU 73	0	0	0	-0.0077	-0.0014	-0.0095
22	SLU 74	0	0	0	-0.0078	-0.0023	-0.0095
22	SLU 75	0	0	0	-0.0078	-0.0023	-0.0095
22	SLU 76	0	0	0	-0.0078	-0.0017	-0.0096
22	SLU 77	0	0	0	-0.0078	-0.0017	-0.0096
22	SLU 78	0	0	0	-0.0079	-0.0023	-0.0097
22	SLU 79	0	0	0	-0.0079	-0.0023	-0.0097
22	SLU 80	0	0	0	-0.0077	-0.0007	-0.0096
22	SLU 81	0	0	0	-0.0078	-0.0012	-0.0097
22	SLU 82	0	0	0	-0.0079	-0.0021	-0.0097
22	SLU 83	0	0	0	-0.0079	-0.0021	-0.0097
22	SLU 84	0	0	0	-0.0079	-0.0015	-0.0098
22	SLU 85	0	0	0	-0.008	-0.0021	-0.0099
22	SLU 86	0	0	0	-0.0081	-0.0029	-0.01
22	SLU 87	0	0	0	-0.0081	-0.0029	-0.01
22	SLU 88	0	0	0	-0.0081	-0.0023	-0.0101
22	SLU 89	0	0	0	-0.0081	-0.0023	-0.0101
22	SLU 90	0	0	0	-0.0082	-0.0029	-0.0101
22	SLU 91	0	0	0	-0.0082	-0.0029	-0.0101
22	SLU 92	0	0	0	-0.0082	-0.0016	-0.0102
22	SLU 93	0	0	0	-0.0082	-0.0016	-0.0102
22	SLU 94	0	0	0	-0.0082	-0.0021	-0.0103
22	SLU 95	0	0	0	-0.0082	-0.0021	-0.0103
22	SLU 96	0	0	0	-0.0083	-0.0024	-0.0105
22	SLU 97	0	0	0	-0.0083	-0.0024	-0.0105
22	SLU 98	0	0	0	-0.0084	-0.003	-0.0105
22	SLU 99	0	0	0	-0.0084	-0.003	-0.0105
22	SLU 100	0	0	0	-0.0074	0	-0.0092
22	SLU 101	0	0	0	-0.0074	0	-0.0092
22	SLU 102	0	0	0	-0.0075	-0.0006	-0.0092
22	SLU 103	0	0	0	-0.0076	-0.0014	-0.0093
22	SLU 104	0	0	0	-0.0076	-0.0014	-0.0093
22	SLU 105	0	0	0	-0.0076	-0.0009	-0.0094
22	SLU 106	0	0	0	-0.0077	-0.0014	-0.0095
22	SLU 107	0	0	0	-0.0078	-0.0023	-0.0095
22	SLU 108	0	0	0	-0.0078	-0.0023	-0.0095
22	SLU 109	0	0	0	-0.0078	-0.0017	-0.0096
22	SLU 110	0	0	0	-0.0078	-0.0017	-0.0096
22	SLU 111	0	0	0	-0.0079	-0.0023	-0.0097
22	SLU 112	0	0	0	-0.0079	-0.0023	-0.0097
22	SLU 113	0	0	0	-0.0077	-0.0007	-0.0096
22	SLU 114	0	0	0	-0.0078	-0.0012	-0.0097
22	SLU 115	0	0	0	-0.0079	-0.0021	-0.0097
22	SLU 116	0	0	0	-0.0079	-0.0021	-0.0097
22	SLU 117	0	0	0	-0.0079	-0.0015	-0.0098
22	SLU 118	0	0	0	-0.008	-0.0021	-0.0099
22	SLU 119	0	0	0	-0.0081	-0.0029	-0.01
22	SLU 120	0	0	0	-0.0081	-0.0029	-0.01
22	SLU 121	0	0	0	-0.0081	-0.0023	-0.0101
22	SLU 122	0	0	0	-0.0081	-0.0023	-0.0101
22	SLU 123	0	0	0	-0.0082	-0.0029	-0.0101
22	SLU 124	0	0	0	-0.0082	-0.0029	-0.0101
22	SLU 125	0	0	0	-0.0082	-0.0016	-0.0102
22	SLU 126	0	0	0	-0.0082	-0.0016	-0.0102
22	SLU 127	0	0	0	-0.0082	-0.0021	-0.0103
22	SLU 128	0	0	0	-0.0082	-0.0021	-0.0103
22	SLU 129	0	0	0	-0.0083	-0.0024	-0.0105
22	SLU 130	0	0	0	-0.0083	-0.0024	-0.0105
22	SLU 131	0	0	0	-0.0084	-0.003	-0.0105
22	SLU 132	0	0	0	-0.0084	-0.003	-0.0105

Nodo	Cont.	Spostamento			Rotazione		
Ind.	N.br.	ux	uy	uz	rx	ry	rz
22	SLE RA 1	0	0	0	-0.0057	0	-0.007
22	SLE RA 2	0	0	0	-0.0057	0	-0.007
22	SLE RA 3	0	0	0	-0.0058	-0.0004	-0.0071
22	SLE RA 4	0	0	0	-0.0058	-0.001	-0.0071
22	SLE RA 5	0	0	0	-0.0058	-0.001	-0.0071
22	SLE RA 6	0	0	0	-0.0058	-0.0006	-0.0072
22	SLE RA 7	0	0	0	-0.0059	-0.001	-0.0072
22	SLE RA 8	0	0	0	-0.0059	-0.0015	-0.0073
22	SLE RA 9	0	0	0	-0.0059	-0.0015	-0.0073
22	SLE RA 10	0	0	0	-0.006	-0.0012	-0.0074
22	SLE RA 11	0	0	0	-0.006	-0.0012	-0.0074
22	SLE RA 12	0	0	0	-0.006	-0.0015	-0.0074
22	SLE RA 13	0	0	0	-0.006	-0.0015	-0.0074
22	SLE RA 14	0	0	0	-0.0059	-0.0004	-0.0073
22	SLE RA 15	0	0	0	-0.006	-0.0008	-0.0074
22	SLE RA 16	0	0	0	-0.006	-0.0014	-0.0074
22	SLE RA 17	0	0	0	-0.006	-0.0014	-0.0074
22	SLE RA 18	0	0	0	-0.006	-0.001	-0.0075
22	SLE RA 19	0	0	0	-0.0061	-0.0014	-0.0075
22	SLE RA 20	0	0	0	-0.0061	-0.0019	-0.0076
22	SLE RA 21	0	0	0	-0.0061	-0.0019	-0.0076
22	SLE RA 22	0	0	0	-0.0062	-0.0016	-0.0076
22	SLE RA 23	0	0	0	-0.0062	-0.0016	-0.0076
22	SLE RA 24	0	0	0	-0.0062	-0.0019	-0.0077
22	SLE RA 25	0	0	0	-0.0062	-0.0019	-0.0077
22	SLE RA 26	0	0	0	-0.0062	-0.0011	-0.0078
22	SLE RA 27	0	0	0	-0.0062	-0.0011	-0.0078
22	SLE RA 28	0	0	0	-0.0062	-0.0014	-0.0078
22	SLE RA 29	0	0	0	-0.0062	-0.0014	-0.0078
22	SLE RA 30	0	0	0	-0.0063	-0.0016	-0.0079
22	SLE RA 31	0	0	0	-0.0063	-0.0016	-0.0079
22	SLE RA 32	0	0	0	-0.0064	-0.002	-0.008
22	SLE RA 33	0	0	0	-0.0064	-0.002	-0.008
22	SLE FR 1	0	0	0	-0.0057	0	-0.007
22	SLE FR 2	0	0	0	-0.0057	0	-0.007
22	SLE FR 3	0	0	0	-0.0058	-0.0004	-0.0071
22	SLE FR 4	0	0	0	-0.0058	-0.0003	-0.0071
22	SLE FR 5	0	0	0	-0.0059	-0.0004	-0.0073
22	SLE QP 1	0	0	0	-0.0057	0	-0.007
22	SLO 1	0	0	0	-0.1008	-0.0536	-0.2293
22	SLO 2	0	0	0	-0.1008	-0.0536	-0.2293
22	SLO 3	0	0	0	0.089	-0.0536	0.2143
22	SLO 4	0	0	0	0.089	-0.0536	0.2143
22	SLO 5	0	0	0	-0.3222	-0.0161	-0.7466
22	SLO 6	0	0	0	-0.3222	-0.0161	-0.7466
22	SLO 7	0	0	0	0.3107	-0.0161	0.7322
22	SLO 8	0	0	0	0.3107	-0.0161	0.7322
22	SLO 9	0	0	0	-0.3221	0.016	-0.7463
22	SLO 10	0	0	0	-0.3221	0.016	-0.7463
22	SLO 11	0	0	0	0.3108	0.016	0.7325
22	SLO 12	0	0	0	0.3108	0.016	0.7325
22	SLO 13	0	0	0	-0.1005	0.0535	-0.2284
22	SLO 14	0	0	0	-0.1005	0.0535	-0.2284
22	SLO 15	0	0	0	0.0894	0.0535	0.2152
22	SLO 16	0	0	0	0.0894	0.0535	0.2152
22	SLD 1	0	0	0	-0.0936	-0.044	-0.2124
22	SLD 2	0	0	0	-0.0936	-0.044	-0.2124
22	SLD 3	0	0	0	0.0819	-0.044	0.1975
22	SLD 4	0	0	0	0.0819	-0.044	0.1975
22	SLD 5	0	0	0	-0.2982	-0.0132	-0.6903
22	SLD 6	0	0	0	-0.2982	-0.0132	-0.6903
22	SLD 7	0	0	0	0.2866	-0.0132	0.676
22	SLD 8	0	0	0	0.2866	-0.0132	0.676
22	SLD 9	0	0	0	-0.2981	0.0131	-0.6901
22	SLD 10	0	0	0	-0.2981	0.0131	-0.6901
22	SLD 11	0	0	0	0.2867	0.0132	0.6762
22	SLD 12	0	0	0	0.2867	0.0132	0.6762
22	SLD 13	0	0	0	-0.0933	0.0439	-0.2116
22	SLD 14	0	0	0	-0.0933	0.0439	-0.2116
22	SLD 15	0	0	0	0.0821	0.0439	0.1983
22	SLD 16	0	0	0	0.0821	0.0439	0.1983
22	SLV 1	0	0	0	-0.2374	-0.0982	-0.5484
22	SLV 2	0	0	0	-0.2374	-0.0982	-0.5484
22	SLV 3	0	0	0	0.2253	-0.0982	0.5327
22	SLV 4	0	0	0	0.2253	-0.0982	0.5327
22	SLV 5	0	0	0	-0.777	-0.0295	-1.8092
22	SLV 6	0	0	0	-0.777	-0.0295	-1.8092
22	SLV 7	0	0	0	0.7654	-0.0295	1.7946
22	SLV 8	0	0	0	0.7654	-0.0295	1.7946
22	SLV 9	0	0	0	-0.7768	0.0294	-1.8087
22	SLV 10	0	0	0	-0.7768	0.0294	-1.8087
22	SLV 11	0	0	0	0.7656	0.0295	1.7951
22	SLV 12	0	0	0	0.7656	0.0295	1.7951
22	SLV 13	0	0	0	-0.2368	0.0981	-0.5468
22	SLV 14	0	0	0	-0.2368	0.0981	-0.5468
22	SLV 15	0	0	0	0.226	0.0981	0.5343
22	SLV 16	0	0	0	0.226	0.0981	0.5343
23	SLU 1	0	0	0	-0.0057	0	0.007
23	SLU 2	0	0	0	-0.0057	0	0.0071
23	SLU 3	0	0	0	-0.0058	0.0006	0.0071
23	SLU 4	0	0	0	-0.0059	0.0014	0.0072
23	SLU 5	0	0	0	-0.0059	0.0014	0.0072
23	SLU 6	0	0	0	-0.0059	0.001	0.0073
23	SLU 7	0	0	0	-0.006	0.0015	0.0073
23	SLU 8	0	0	0	-0.0061	0.0024	0.0074

Nodo	Cont.	Spostamento			Rotazione		
Ind.	N.br.	ux	uy	uz	rx	ry	rz
23	SLU 9	0	0	0	-0.0061	0.0024	0.0074
23	SLU 10	0	0	0	-0.0061	0.0019	0.0075
23	SLU 11	0	0	0	-0.0061	0.0019	0.0075
23	SLU 12	0	0	0	-0.0062	0.0025	0.0076
23	SLU 13	0	0	0	-0.0062	0.0025	0.0076
23	SLU 14	0	0	0	-0.006	0.0008	0.0075
23	SLU 15	0	0	0	-0.0061	0.0014	0.0075
23	SLU 16	0	0	0	-0.0062	0.0022	0.0076
23	SLU 17	0	0	0	-0.0062	0.0022	0.0076
23	SLU 18	0	0	0	-0.0062	0.0017	0.0077
23	SLU 19	0	0	0	-0.0063	0.0023	0.0078
23	SLU 20	0	0	0	-0.0063	0.0031	0.0078
23	SLU 21	0	0	0	-0.0063	0.0031	0.0078
23	SLU 22	0	0	0	-0.0064	0.0027	0.0079
23	SLU 23	0	0	0	-0.0064	0.0027	0.0079
23	SLU 24	0	0	0	-0.0064	0.0032	0.008
23	SLU 25	0	0	0	-0.0064	0.0032	0.008
23	SLU 26	0	0	0	-0.0064	0.002	0.0081
23	SLU 27	0	0	0	-0.0064	0.002	0.0081
23	SLU 28	0	0	0	-0.0065	0.0025	0.0082
23	SLU 29	0	0	0	-0.0065	0.0025	0.0082
23	SLU 30	0	0	0	-0.0066	0.0029	0.0083
23	SLU 31	0	0	0	-0.0066	0.0029	0.0083
23	SLU 32	0	0	0	-0.0067	0.0035	0.0084
23	SLU 33	0	0	0	-0.0067	0.0035	0.0084
23	SLU 34	0	0	0	-0.0057	0	0.007
23	SLU 35	0	0	0	-0.0057	0	0.0071
23	SLU 36	0	0	0	-0.0058	0.0006	0.0071
23	SLU 37	0	0	0	-0.0059	0.0014	0.0072
23	SLU 38	0	0	0	-0.0059	0.0014	0.0072
23	SLU 39	0	0	0	-0.0059	0.001	0.0073
23	SLU 40	0	0	0	-0.006	0.0015	0.0073
23	SLU 41	0	0	0	-0.0061	0.0024	0.0074
23	SLU 42	0	0	0	-0.0061	0.0024	0.0074
23	SLU 43	0	0	0	-0.0061	0.0019	0.0075
23	SLU 44	0	0	0	-0.0061	0.0019	0.0075
23	SLU 45	0	0	0	-0.0062	0.0025	0.0076
23	SLU 46	0	0	0	-0.0062	0.0025	0.0076
23	SLU 47	0	0	0	-0.006	0.0008	0.0075
23	SLU 48	0	0	0	-0.0061	0.0014	0.0075
23	SLU 49	0	0	0	-0.0062	0.0022	0.0076
23	SLU 50	0	0	0	-0.0062	0.0022	0.0076
23	SLU 51	0	0	0	-0.0062	0.0017	0.0077
23	SLU 52	0	0	0	-0.0063	0.0023	0.0078
23	SLU 53	0	0	0	-0.0063	0.0031	0.0078
23	SLU 54	0	0	0	-0.0063	0.0031	0.0078
23	SLU 55	0	0	0	-0.0064	0.0027	0.0079
23	SLU 56	0	0	0	-0.0064	0.0027	0.0079
23	SLU 57	0	0	0	-0.0064	0.0032	0.008
23	SLU 58	0	0	0	-0.0064	0.0032	0.008
23	SLU 59	0	0	0	-0.0064	0.002	0.0081
23	SLU 60	0	0	0	-0.0064	0.002	0.0081
23	SLU 61	0	0	0	-0.0065	0.0025	0.0082
23	SLU 62	0	0	0	-0.0065	0.0025	0.0082
23	SLU 63	0	0	0	-0.0066	0.0029	0.0083
23	SLU 64	0	0	0	-0.0066	0.0029	0.0083
23	SLU 65	0	0	0	-0.0067	0.0035	0.0084
23	SLU 66	0	0	0	-0.0067	0.0035	0.0084
23	SLU 67	0	0	0	-0.0074	0	0.0092
23	SLU 68	0	0	0	-0.0074	0	0.0092
23	SLU 69	0	0	0	-0.0075	0.0006	0.0092
23	SLU 70	0	0	0	-0.0076	0.0014	0.0093
23	SLU 71	0	0	0	-0.0076	0.0014	0.0093
23	SLU 72	0	0	0	-0.0076	0.001	0.0094
23	SLU 73	0	0	0	-0.0077	0.0015	0.0094
23	SLU 74	0	0	0	-0.0078	0.0024	0.0095
23	SLU 75	0	0	0	-0.0078	0.0024	0.0095
23	SLU 76	0	0	0	-0.0078	0.0019	0.0096
23	SLU 77	0	0	0	-0.0078	0.0019	0.0096
23	SLU 78	0	0	0	-0.0079	0.0025	0.0097
23	SLU 79	0	0	0	-0.0079	0.0025	0.0097
23	SLU 80	0	0	0	-0.0077	0.0008	0.0096
23	SLU 81	0	0	0	-0.0078	0.0014	0.0096
23	SLU 82	0	0	0	-0.0079	0.0022	0.0097
23	SLU 83	0	0	0	-0.0079	0.0022	0.0097
23	SLU 84	0	0	0	-0.0079	0.0017	0.0098
23	SLU 85	0	0	0	-0.008	0.0023	0.0099
23	SLU 86	0	0	0	-0.0081	0.0031	0.01
23	SLU 87	0	0	0	-0.0081	0.0031	0.01
23	SLU 88	0	0	0	-0.0081	0.0027	0.01
23	SLU 89	0	0	0	-0.0081	0.0027	0.01
23	SLU 90	0	0	0	-0.0082	0.0032	0.0101
23	SLU 91	0	0	0	-0.0082	0.0032	0.0101
23	SLU 92	0	0	0	-0.0081	0.002	0.0102
23	SLU 93	0	0	0	-0.0081	0.002	0.0102
23	SLU 94	0	0	0	-0.0082	0.0025	0.0103
23	SLU 95	0	0	0	-0.0082	0.0025	0.0103
23	SLU 96	0	0	0	-0.0083	0.0029	0.0105
23	SLU 97	0	0	0	-0.0083	0.0029	0.0105
23	SLU 98	0	0	0	-0.0084	0.0035	0.0105
23	SLU 99	0	0	0	-0.0084	0.0035	0.0105
23	SLU 100	0	0	0	-0.0074	0	0.0092
23	SLU 101	0	0	0	-0.0074	0	0.0092
23	SLU 102	0	0	0	-0.0075	0.0006	0.0092
23	SLU 103	0	0	0	-0.0076	0.0014	0.0093

Nodo	Cont.	Spostamento			Rotazione		
Ind.	N.br.	ux	uy	uz	rx	ry	rz
23	SLU 104	0	0	0	-0.0076	0.0014	0.0093
23	SLU 105	0	0	0	-0.0076	0.001	0.0094
23	SLU 106	0	0	0	-0.0077	0.0015	0.0094
23	SLU 107	0	0	0	-0.0078	0.0024	0.0095
23	SLU 108	0	0	0	-0.0078	0.0024	0.0095
23	SLU 109	0	0	0	-0.0078	0.0019	0.0096
23	SLU 110	0	0	0	-0.0078	0.0019	0.0096
23	SLU 111	0	0	0	-0.0079	0.0025	0.0097
23	SLU 112	0	0	0	-0.0079	0.0025	0.0097
23	SLU 113	0	0	0	-0.0077	0.0008	0.0096
23	SLU 114	0	0	0	-0.0078	0.0014	0.0096
23	SLU 115	0	0	0	-0.0079	0.0022	0.0097
23	SLU 116	0	0	0	-0.0079	0.0022	0.0097
23	SLU 117	0	0	0	-0.0079	0.0017	0.0098
23	SLU 118	0	0	0	-0.008	0.0023	0.0099
23	SLU 119	0	0	0	-0.0081	0.0031	0.01
23	SLU 120	0	0	0	-0.0081	0.0031	0.01
23	SLU 121	0	0	0	-0.0081	0.0027	0.01
23	SLU 122	0	0	0	-0.0081	0.0027	0.01
23	SLU 123	0	0	0	-0.0082	0.0032	0.0101
23	SLU 124	0	0	0	-0.0082	0.0032	0.0101
23	SLU 125	0	0	0	-0.0081	0.002	0.0102
23	SLU 126	0	0	0	-0.0081	0.002	0.0102
23	SLU 127	0	0	0	-0.0082	0.0025	0.0103
23	SLU 128	0	0	0	-0.0082	0.0025	0.0103
23	SLU 129	0	0	0	-0.0083	0.0029	0.0105
23	SLU 130	0	0	0	-0.0083	0.0029	0.0105
23	SLU 131	0	0	0	-0.0084	0.0035	0.0105
23	SLU 132	0	0	0	-0.0084	0.0035	0.0105
23	SLE RA 1	0	0	0	-0.0057	0	0.007
23	SLE RA 2	0	0	0	-0.0057	0	0.007
23	SLE RA 3	0	0	0	-0.0058	0.0004	0.0071
23	SLE RA 4	0	0	0	-0.0058	0.001	0.0071
23	SLE RA 5	0	0	0	-0.0058	0.001	0.0071
23	SLE RA 6	0	0	0	-0.0058	0.0007	0.0072
23	SLE RA 7	0	0	0	-0.0059	0.001	0.0072
23	SLE RA 8	0	0	0	-0.0059	0.0016	0.0073
23	SLE RA 9	0	0	0	-0.0059	0.0016	0.0073
23	SLE RA 10	0	0	0	-0.006	0.0013	0.0074
23	SLE RA 11	0	0	0	-0.006	0.0013	0.0074
23	SLE RA 12	0	0	0	-0.006	0.0016	0.0074
23	SLE RA 13	0	0	0	-0.006	0.0016	0.0074
23	SLE RA 14	0	0	0	-0.0059	0.0005	0.0073
23	SLE RA 15	0	0	0	-0.0059	0.0009	0.0074
23	SLE RA 16	0	0	0	-0.006	0.0015	0.0074
23	SLE RA 17	0	0	0	-0.006	0.0015	0.0074
23	SLE RA 18	0	0	0	-0.006	0.0012	0.0075
23	SLE RA 19	0	0	0	-0.0061	0.0015	0.0075
23	SLE RA 20	0	0	0	-0.0061	0.0021	0.0076
23	SLE RA 21	0	0	0	-0.0061	0.0021	0.0076
23	SLE RA 22	0	0	0	-0.0062	0.0018	0.0076
23	SLE RA 23	0	0	0	-0.0062	0.0018	0.0076
23	SLE RA 24	0	0	0	-0.0062	0.0022	0.0077
23	SLE RA 25	0	0	0	-0.0062	0.0022	0.0077
23	SLE RA 26	0	0	0	-0.0062	0.0013	0.0078
23	SLE RA 27	0	0	0	-0.0062	0.0013	0.0078
23	SLE RA 28	0	0	0	-0.0062	0.0017	0.0078
23	SLE RA 29	0	0	0	-0.0062	0.0017	0.0078
23	SLE RA 30	0	0	0	-0.0063	0.0019	0.0079
23	SLE RA 31	0	0	0	-0.0063	0.0019	0.0079
23	SLE RA 32	0	0	0	-0.0064	0.0023	0.0079
23	SLE RA 33	0	0	0	-0.0064	0.0023	0.0079
23	SLE FR 1	0	0	0	-0.0057	0	0.007
23	SLE FR 2	0	0	0	-0.0057	0	0.007
23	SLE FR 3	0	0	0	-0.0058	0.0004	0.0071
23	SLE FR 4	0	0	0	-0.0058	0.0003	0.0071
23	SLE FR 5	0	0	0	-0.0059	0.0005	0.0073
23	SLE QP 1	0	0	0	-0.0057	0	0.007
23	SLO 1	0	0	0	-0.1005	-0.0535	0.2284
23	SLO 2	0	0	0	-0.1005	-0.0535	0.2284
23	SLO 3	0	0	0	0.0894	-0.0535	-0.2152
23	SLO 4	0	0	0	0.0894	-0.0535	-0.2152
23	SLO 5	0	0	0	-0.3221	-0.016	0.7463
23	SLO 6	0	0	0	-0.3221	-0.016	0.7463
23	SLO 7	0	0	0	0.3108	-0.016	-0.7325
23	SLO 8	0	0	0	0.3108	-0.016	-0.7325
23	SLO 9	0	0	0	-0.3222	0.0161	0.7466
23	SLO 10	0	0	0	-0.3222	0.0161	0.7466
23	SLO 11	0	0	0	0.3107	0.0161	-0.7322
23	SLO 12	0	0	0	0.3107	0.0161	-0.7322
23	SLO 13	0	0	0	-0.1008	0.0536	0.2293
23	SLO 14	0	0	0	-0.1008	0.0536	0.2293
23	SLO 15	0	0	0	0.089	0.0536	-0.2143
23	SLO 16	0	0	0	0.089	0.0536	-0.2143
23	SLD 1	0	0	0	-0.0933	-0.0439	0.2116
23	SLD 2	0	0	0	-0.0933	-0.0439	0.2116
23	SLD 3	0	0	0	0.0821	-0.0439	-0.1983
23	SLD 4	0	0	0	0.0821	-0.0439	-0.1983
23	SLD 5	0	0	0	-0.2981	-0.0131	0.6901
23	SLD 6	0	0	0	-0.2981	-0.0131	0.6901
23	SLD 7	0	0	0	0.2867	-0.0132	-0.6762
23	SLD 8	0	0	0	0.2867	-0.0132	-0.6762
23	SLD 9	0	0	0	-0.2982	0.0132	0.6903
23	SLD 10	0	0	0	-0.2982	0.0132	0.6903
23	SLD 11	0	0	0	0.2866	0.0132	-0.676

Nodo	Cont.	Spostamento			Rotazione		
Ind.	N.br.	ux	uy	uz	rx	ry	rz
23	SLD 12	0	0	0	0.2866	0.0132	-0.676
23	SLD 13	0	0	0	-0.0936	0.044	0.2124
23	SLD 14	0	0	0	-0.0936	0.044	0.2124
23	SLD 15	0	0	0	0.0819	0.044	-0.1975
23	SLD 16	0	0	0	0.0819	0.044	-0.1975
23	SLV 1	0	0	0	-0.2368	-0.0981	0.5468
23	SLV 2	0	0	0	-0.2368	-0.0981	0.5468
23	SLV 3	0	0	0	0.226	-0.0981	-0.5343
23	SLV 4	0	0	0	0.226	-0.0981	-0.5343
23	SLV 5	0	0	0	-0.7768	-0.0294	1.8087
23	SLV 6	0	0	0	-0.7768	-0.0294	1.8087
23	SLV 7	0	0	0	0.7656	-0.0295	-1.7951
23	SLV 8	0	0	0	0.7656	-0.0295	-1.7951
23	SLV 9	0	0	0	-0.777	0.0295	1.8092
23	SLV 10	0	0	0	-0.777	0.0295	1.8092
23	SLV 11	0	0	0	0.7654	0.0295	-1.7946
23	SLV 12	0	0	0	0.7654	0.0295	-1.7946
23	SLV 13	0	0	0	-0.2374	0.0982	0.5484
23	SLV 14	0	0	0	-0.2374	0.0982	0.5484
23	SLV 15	0	0	0	0.2253	0.0982	-0.5327
23	SLV 16	0	0	0	0.2253	0.0982	-0.5327
24	SLU 1	-0.02394	-0.00462	-0.0096	0.0072	-0.0101	0.0111
24	SLU 2	-0.02394	-0.00462	-0.0096	0.0072	-0.0101	0.0111
24	SLU 3	-0.02394	-0.00462	-0.0096	0.0072	-0.0101	0.0111
24	SLU 4	-0.02394	-0.00462	-0.0096	0.0072	-0.0101	0.0111
24	SLU 5	-0.02394	-0.00462	-0.0096	0.0072	-0.0101	0.0111
24	SLU 6	-0.02564	-0.00478	-0.00958	0.0075	-0.0108	0.0115
24	SLU 7	-0.02564	-0.00478	-0.00958	0.0075	-0.0108	0.0115
24	SLU 8	-0.02564	-0.00478	-0.00957	0.0075	-0.0108	0.0115
24	SLU 9	-0.02564	-0.00478	-0.00957	0.0075	-0.0108	0.0115
24	SLU 10	-0.02734	-0.00494	-0.00955	0.0077	-0.0114	0.0119
24	SLU 11	-0.02734	-0.00494	-0.00955	0.0077	-0.0114	0.0119
24	SLU 12	-0.02734	-0.00494	-0.00955	0.0077	-0.0114	0.0119
24	SLU 13	-0.02734	-0.00494	-0.00955	0.0077	-0.0114	0.0119
24	SLU 14	-0.03761	-0.00557	-0.00786	0.0086	-0.0162	0.0132
24	SLU 15	-0.03761	-0.00557	-0.00786	0.0086	-0.0162	0.0133
24	SLU 16	-0.03761	-0.00557	-0.00786	0.0086	-0.0162	0.0133
24	SLU 17	-0.03761	-0.00557	-0.00786	0.0086	-0.0162	0.0133
24	SLU 18	-0.03932	-0.00573	-0.00783	0.0089	-0.0168	0.0136
24	SLU 19	-0.03932	-0.00573	-0.00783	0.0089	-0.0168	0.0136
24	SLU 20	-0.03932	-0.00573	-0.00783	0.0089	-0.0168	0.0137
24	SLU 21	-0.03932	-0.00573	-0.00783	0.0089	-0.0168	0.0137
24	SLU 22	-0.04102	-0.00589	-0.0078	0.0091	-0.0175	0.014
24	SLU 23	-0.04102	-0.00589	-0.0078	0.0091	-0.0175	0.014
24	SLU 24	-0.04102	-0.00589	-0.0078	0.0091	-0.0175	0.014
24	SLU 25	-0.04102	-0.00589	-0.0078	0.0091	-0.0175	0.014
24	SLU 26	-0.05813	-0.00699	-0.00523	0.0108	-0.0253	0.0164
24	SLU 27	-0.05813	-0.00699	-0.00523	0.0108	-0.0253	0.0164
24	SLU 28	-0.05813	-0.00699	-0.00523	0.0108	-0.0253	0.0164
24	SLU 29	-0.05813	-0.00699	-0.00523	0.0108	-0.0253	0.0165
24	SLU 30	-0.05983	-0.00715	-0.0052	0.011	-0.026	0.0168
24	SLU 31	-0.05983	-0.00715	-0.0052	0.011	-0.026	0.0168
24	SLU 32	-0.05983	-0.00715	-0.0052	0.011	-0.026	0.0168
24	SLU 33	-0.05983	-0.00715	-0.0052	0.011	-0.026	0.0168
24	SLU 34	-0.02394	-0.00462	-0.0096	0.0072	-0.0101	0.0111
24	SLU 35	-0.02394	-0.00462	-0.0096	0.0072	-0.0101	0.0111
24	SLU 36	-0.02394	-0.00462	-0.0096	0.0072	-0.0101	0.0111
24	SLU 37	-0.02394	-0.00462	-0.0096	0.0072	-0.0101	0.0111
24	SLU 38	-0.02394	-0.00462	-0.0096	0.0072	-0.0101	0.0111
24	SLU 39	-0.02564	-0.00478	-0.00958	0.0075	-0.0108	0.0115
24	SLU 40	-0.02564	-0.00478	-0.00958	0.0075	-0.0108	0.0115
24	SLU 41	-0.02564	-0.00478	-0.00957	0.0075	-0.0108	0.0115
24	SLU 42	-0.02564	-0.00478	-0.00957	0.0075	-0.0108	0.0115
24	SLU 43	-0.02734	-0.00494	-0.00955	0.0077	-0.0114	0.0119
24	SLU 44	-0.02734	-0.00494	-0.00955	0.0077	-0.0114	0.0119
24	SLU 45	-0.02734	-0.00494	-0.00955	0.0077	-0.0114	0.0119
24	SLU 46	-0.02734	-0.00494	-0.00955	0.0077	-0.0114	0.0119
24	SLU 47	-0.03761	-0.00557	-0.00786	0.0086	-0.0162	0.0132
24	SLU 48	-0.03761	-0.00557	-0.00786	0.0086	-0.0162	0.0133
24	SLU 49	-0.03761	-0.00557	-0.00786	0.0086	-0.0162	0.0133
24	SLU 50	-0.03761	-0.00557	-0.00786	0.0086	-0.0162	0.0133
24	SLU 51	-0.03932	-0.00573	-0.00783	0.0089	-0.0168	0.0136
24	SLU 52	-0.03932	-0.00573	-0.00783	0.0089	-0.0168	0.0136
24	SLU 53	-0.03932	-0.00573	-0.00783	0.0089	-0.0168	0.0137
24	SLU 54	-0.03932	-0.00573	-0.00783	0.0089	-0.0168	0.0137
24	SLU 55	-0.04102	-0.00589	-0.0078	0.0091	-0.0175	0.014
24	SLU 56	-0.04102	-0.00589	-0.0078	0.0091	-0.0175	0.014
24	SLU 57	-0.04102	-0.00589	-0.0078	0.0091	-0.0175	0.014
24	SLU 58	-0.04102	-0.00589	-0.0078	0.0091	-0.0175	0.014
24	SLU 59	-0.05813	-0.00699	-0.00523	0.0108	-0.0253	0.0164
24	SLU 60	-0.05813	-0.00699	-0.00523	0.0108	-0.0253	0.0164
24	SLU 61	-0.05813	-0.00699	-0.00523	0.0108	-0.0253	0.0164
24	SLU 62	-0.05813	-0.00699	-0.00523	0.0108	-0.0253	0.0165
24	SLU 63	-0.05983	-0.00715	-0.0052	0.011	-0.026	0.0168
24	SLU 64	-0.05983	-0.00715	-0.0052	0.011	-0.026	0.0168
24	SLU 65	-0.05983	-0.00715	-0.0052	0.011	-0.026	0.0168
24	SLU 66	-0.05983	-0.00715	-0.0052	0.011	-0.026	0.0168
24	SLU 67	-0.03112	-0.006	-0.01249	0.0094	-0.0131	0.0144
24	SLU 68	-0.03112	-0.006	-0.01249	0.0094	-0.0131	0.0144
24	SLU 69	-0.03112	-0.006	-0.01249	0.0094	-0.0131	0.0145
24	SLU 70	-0.03112	-0.006	-0.01249	0.0094	-0.0131	0.0145
24	SLU 71	-0.03112	-0.006	-0.01249	0.0094	-0.0131	0.0145
24	SLU 72	-0.03282	-0.00617	-0.01246	0.0096	-0.0138	0.0148
24	SLU 73	-0.03282	-0.00617	-0.01246	0.0096	-0.0138	0.0149
24	SLU 74	-0.03282	-0.00616	-0.01246	0.0096	-0.0138	0.0149

Nodo	Cont.	Spostamento			Rotazione		
Ind.	N.br.	ux	uy	uz	rx	ry	rz
24	SLU 75	-0.03282	-0.00617	-0.01246	0.0096	-0.0138	0.0149
24	SLU 76	-0.03452	-0.00633	-0.01243	0.0099	-0.0145	0.0152
24	SLU 77	-0.03452	-0.00633	-0.01243	0.0099	-0.0145	0.0152
24	SLU 78	-0.03452	-0.00633	-0.01243	0.0099	-0.0145	0.0152
24	SLU 79	-0.03452	-0.00633	-0.01243	0.0099	-0.0145	0.0152
24	SLU 80	-0.0448	-0.00695	-0.01074	0.0108	-0.0192	0.0166
24	SLU 81	-0.0448	-0.00695	-0.01074	0.0108	-0.0192	0.0166
24	SLU 82	-0.0448	-0.00695	-0.01074	0.0108	-0.0192	0.0166
24	SLU 83	-0.0448	-0.00695	-0.01074	0.0108	-0.0192	0.0166
24	SLU 84	-0.0465	-0.00711	-0.01071	0.011	-0.0199	0.017
24	SLU 85	-0.0465	-0.00711	-0.01071	0.011	-0.0199	0.017
24	SLU 86	-0.0465	-0.00711	-0.01071	0.0111	-0.0199	0.017
24	SLU 87	-0.0465	-0.00711	-0.01071	0.0111	-0.0199	0.017
24	SLU 88	-0.0482	-0.00728	-0.01068	0.0113	-0.0205	0.0174
24	SLU 89	-0.0482	-0.00728	-0.01068	0.0113	-0.0205	0.0174
24	SLU 90	-0.0482	-0.00728	-0.01068	0.0113	-0.0205	0.0174
24	SLU 91	-0.0482	-0.00728	-0.01068	0.0113	-0.0205	0.0174
24	SLU 92	-0.06531	-0.00838	-0.00811	0.0129	-0.0283	0.0198
24	SLU 93	-0.06531	-0.00838	-0.00811	0.0129	-0.0283	0.0198
24	SLU 94	-0.06531	-0.00838	-0.00811	0.0129	-0.0283	0.0198
24	SLU 95	-0.06531	-0.00838	-0.00811	0.0129	-0.0283	0.0198
24	SLU 96	-0.06701	-0.00854	-0.00808	0.0132	-0.029	0.0202
24	SLU 97	-0.06701	-0.00854	-0.00808	0.0132	-0.029	0.0202
24	SLU 98	-0.06701	-0.00854	-0.00808	0.0132	-0.029	0.0202
24	SLU 99	-0.06701	-0.00854	-0.00808	0.0132	-0.029	0.0202
24	SLU 100	-0.03112	-0.006	-0.01249	0.0094	-0.0131	0.0144
24	SLU 101	-0.03112	-0.006	-0.01249	0.0094	-0.0131	0.0144
24	SLU 102	-0.03112	-0.006	-0.01249	0.0094	-0.0131	0.0145
24	SLU 103	-0.03112	-0.006	-0.01249	0.0094	-0.0131	0.0145
24	SLU 104	-0.03112	-0.006	-0.01249	0.0094	-0.0131	0.0145
24	SLU 105	-0.03282	-0.00617	-0.01246	0.0096	-0.0138	0.0148
24	SLU 106	-0.03282	-0.00617	-0.01246	0.0096	-0.0138	0.0149
24	SLU 107	-0.03282	-0.00616	-0.01246	0.0096	-0.0138	0.0149
24	SLU 108	-0.03282	-0.00617	-0.01246	0.0096	-0.0138	0.0149
24	SLU 109	-0.03452	-0.00633	-0.01243	0.0099	-0.0145	0.0152
24	SLU 110	-0.03452	-0.00633	-0.01243	0.0099	-0.0145	0.0152
24	SLU 111	-0.03452	-0.00633	-0.01243	0.0099	-0.0145	0.0152
24	SLU 112	-0.03452	-0.00633	-0.01243	0.0099	-0.0145	0.0152
24	SLU 113	-0.0448	-0.00695	-0.01074	0.0108	-0.0192	0.0166
24	SLU 114	-0.0448	-0.00695	-0.01074	0.0108	-0.0192	0.0166
24	SLU 115	-0.0448	-0.00695	-0.01074	0.0108	-0.0192	0.0166
24	SLU 116	-0.0448	-0.00695	-0.01074	0.0108	-0.0192	0.0166
24	SLU 117	-0.0465	-0.00711	-0.01071	0.011	-0.0199	0.017
24	SLU 118	-0.0465	-0.00711	-0.01071	0.011	-0.0199	0.017
24	SLU 119	-0.0465	-0.00711	-0.01071	0.0111	-0.0199	0.017
24	SLU 120	-0.0465	-0.00711	-0.01071	0.0111	-0.0199	0.017
24	SLU 121	-0.0482	-0.00728	-0.01068	0.0113	-0.0205	0.0174
24	SLU 122	-0.0482	-0.00728	-0.01068	0.0113	-0.0205	0.0174
24	SLU 123	-0.0482	-0.00728	-0.01068	0.0113	-0.0205	0.0174
24	SLU 124	-0.0482	-0.00728	-0.01068	0.0113	-0.0205	0.0174
24	SLU 125	-0.06531	-0.00838	-0.00811	0.0129	-0.0283	0.0198
24	SLU 126	-0.06531	-0.00838	-0.00811	0.0129	-0.0283	0.0198
24	SLU 127	-0.06531	-0.00838	-0.00811	0.0129	-0.0283	0.0198
24	SLU 128	-0.06531	-0.00838	-0.00811	0.0129	-0.0283	0.0198
24	SLU 129	-0.06701	-0.00854	-0.00808	0.0132	-0.029	0.0202
24	SLU 130	-0.06701	-0.00854	-0.00808	0.0132	-0.029	0.0202
24	SLU 131	-0.06701	-0.00854	-0.00808	0.0132	-0.029	0.0202
24	SLU 132	-0.06701	-0.00854	-0.00808	0.0132	-0.029	0.0202
24	SLE RA 1	-0.02394	-0.00462	-0.0096	0.0072	-0.0101	0.0111
24	SLE RA 2	-0.02394	-0.00462	-0.0096	0.0072	-0.0101	0.0111
24	SLE RA 3	-0.02394	-0.00462	-0.0096	0.0072	-0.0101	0.0111
24	SLE RA 4	-0.02394	-0.00462	-0.0096	0.0072	-0.0101	0.0111
24	SLE RA 5	-0.02394	-0.00462	-0.0096	0.0072	-0.0101	0.0111
24	SLE RA 6	-0.02507	-0.00473	-0.00958	0.0074	-0.0105	0.0114
24	SLE RA 7	-0.02507	-0.00473	-0.00958	0.0074	-0.0105	0.0114
24	SLE RA 8	-0.02507	-0.00473	-0.00958	0.0074	-0.0105	0.0114
24	SLE RA 9	-0.02507	-0.00473	-0.00958	0.0074	-0.0105	0.0114
24	SLE RA 10	-0.02621	-0.00483	-0.00957	0.0075	-0.011	0.0116
24	SLE RA 11	-0.02621	-0.00483	-0.00957	0.0075	-0.011	0.0116
24	SLE RA 12	-0.02621	-0.00483	-0.00957	0.0075	-0.011	0.0116
24	SLE RA 13	-0.02621	-0.00483	-0.00957	0.0075	-0.011	0.0116
24	SLE RA 14	-0.03306	-0.00525	-0.00844	0.0082	-0.0141	0.0125
24	SLE RA 15	-0.03306	-0.00525	-0.00844	0.0082	-0.0141	0.0125
24	SLE RA 16	-0.03306	-0.00525	-0.00844	0.0082	-0.0141	0.0126
24	SLE RA 17	-0.03306	-0.00525	-0.00844	0.0082	-0.0141	0.0126
24	SLE RA 18	-0.03419	-0.00536	-0.00842	0.0083	-0.0146	0.0128
24	SLE RA 19	-0.03419	-0.00536	-0.00842	0.0083	-0.0146	0.0128
24	SLE RA 20	-0.03419	-0.00536	-0.00842	0.0083	-0.0146	0.0128
24	SLE RA 21	-0.03419	-0.00536	-0.00842	0.0083	-0.0146	0.0128
24	SLE RA 22	-0.03532	-0.00547	-0.0084	0.0085	-0.015	0.013
24	SLE RA 23	-0.03532	-0.00547	-0.0084	0.0085	-0.015	0.0131
24	SLE RA 24	-0.03532	-0.00547	-0.0084	0.0085	-0.015	0.0131
24	SLE RA 25	-0.03532	-0.00547	-0.0084	0.0085	-0.015	0.0131
24	SLE RA 26	-0.04673	-0.0062	-0.00669	0.0096	-0.0202	0.0147
24	SLE RA 27	-0.04673	-0.0062	-0.00669	0.0096	-0.0202	0.0147
24	SLE RA 28	-0.04673	-0.0062	-0.00669	0.0096	-0.0202	0.0147
24	SLE RA 29	-0.04673	-0.0062	-0.00669	0.0096	-0.0202	0.0147
24	SLE RA 30	-0.04787	-0.00631	-0.00667	0.0097	-0.0207	0.0149
24	SLE RA 31	-0.04787	-0.00631	-0.00667	0.0097	-0.0207	0.0149
24	SLE RA 32	-0.04787	-0.00631	-0.00667	0.0097	-0.0207	0.0149
24	SLE RA 33	-0.04787	-0.00631	-0.00667	0.0097	-0.0207	0.0149
24	SLE FR 1	-0.02394	-0.00462	-0.0096	0.0072	-0.0101	0.0111
24	SLE FR 2	-0.02394	-0.00462	-0.0096	0.0072	-0.0101	0.0111
24	SLE FR 3	-0.02394	-0.00462	-0.0096	0.0072	-0.0101	0.0111
24	SLE FR 4	-0.02439	-0.00466	-0.0096	0.0073	-0.0103	0.0112

Nodo	Cont.	Spostamento			Rotazione		
Ind.	N.br.	ux	uy	uz	rx	ry	rz
24	SLE FR 5	-0.03306	-0.00525	-0.00844	0.0082	-0.0141	0.0125
24	SLE QP 1	-0.02394	-0.00462	-0.0096	0.0072	-0.0101	0.0111
24	SLO 1	-0.11571	-0.0048	0.02946	-0.1024	-0.0593	-0.2513
24	SLO 2	-0.11571	-0.0048	0.02946	-0.1024	-0.0593	-0.2513
24	SLO 3	-0.11571	-0.00439	0.02952	0.1168	-0.0593	0.2735
24	SLO 4	-0.11571	-0.00439	0.02952	0.1168	-0.0593	0.2735
24	SLO 5	-0.05147	-0.0053	0.00203	-0.3582	-0.0248	-0.8636
24	SLO 6	-0.05147	-0.0053	0.00203	-0.3582	-0.0248	-0.8636
24	SLO 7	-0.05147	-0.00392	0.00222	0.3726	-0.0248	0.8857
24	SLO 8	-0.05147	-0.00392	0.00222	0.3726	-0.0248	0.8857
24	SLO 9	0.00359	-0.00532	-0.02143	-0.3582	0.0047	-0.8635
24	SLO 10	0.00359	-0.00532	-0.02143	-0.3582	0.0047	-0.8635
24	SLO 11	0.00359	-0.00393	-0.02123	0.3726	0.0047	0.8858
24	SLO 12	0.00359	-0.00393	-0.02123	0.3726	0.0047	0.8858
24	SLO 13	0.06783	-0.00485	-0.04872	-0.1024	0.0391	-0.2512
24	SLO 14	0.06783	-0.00485	-0.04872	-0.1024	0.0391	-0.2512
24	SLO 15	0.06783	-0.00443	-0.04867	0.1168	0.0391	0.2735
24	SLO 16	0.06783	-0.00443	-0.04867	0.1168	0.0391	0.2735
24	SLD 1	-0.09924	-0.00479	0.02244	-0.0941	-0.0504	-0.2314
24	SLD 2	-0.09924	-0.00479	0.02244	-0.0941	-0.0504	-0.2314
24	SLD 3	-0.09924	-0.00441	0.0225	0.1085	-0.0504	0.2535
24	SLD 4	-0.09924	-0.00441	0.0225	0.1085	-0.0504	0.2535
24	SLD 5	-0.04653	-0.00525	-0.00007	-0.3304	-0.0222	-0.7971
24	SLD 6	-0.04653	-0.00525	-0.00007	-0.3304	-0.0222	-0.7971
24	SLD 7	-0.04653	-0.00397	0.00011	0.3448	-0.0222	0.8193
24	SLD 8	-0.04653	-0.00397	0.00011	0.3448	-0.0222	0.8193
24	SLD 9	-0.00135	-0.00526	-0.01932	-0.3304	0.002	-0.797
24	SLD 10	-0.00135	-0.00526	-0.01932	-0.3304	0.002	-0.797
24	SLD 11	-0.00135	-0.00398	-0.01914	0.3448	0.002	0.8193
24	SLD 12	-0.00135	-0.00398	-0.01914	0.3448	0.002	0.8193
24	SLD 13	0.05136	-0.00483	-0.04171	-0.0941	0.0303	-0.2313
24	SLD 14	0.05136	-0.00483	-0.04171	-0.0941	0.0303	-0.2313
24	SLD 15	0.05136	-0.00444	-0.04165	0.1085	0.0303	0.2536
24	SLD 16	0.05136	-0.00444	-0.04165	0.1085	0.0303	0.2536
24	SLV 1	-0.19215	-0.00508	0.06198	-0.26	-0.1002	-0.6284
24	SLV 2	-0.19215	-0.00508	0.06198	-0.26	-0.1002	-0.6284
24	SLV 3	-0.19215	-0.00407	0.06212	0.2743	-0.1002	0.6505
24	SLV 4	-0.19215	-0.00407	0.06212	0.2743	-0.1002	0.6505
24	SLV 5	-0.0744	-0.00629	0.01166	-0.8832	-0.0371	-2.1205
24	SLV 6	-0.0744	-0.00629	0.01166	-0.8832	-0.0371	-2.1205
24	SLV 7	-0.0744	-0.00292	0.01213	0.8976	-0.0371	2.1426
24	SLV 8	-0.0744	-0.00292	0.01213	0.8976	-0.0371	2.1426
24	SLV 9	0.02653	-0.00632	-0.03134	-0.8832	0.0169	-2.1204
24	SLV 10	0.02653	-0.00632	-0.03134	-0.8832	0.0169	-2.1204
24	SLV 11	0.02653	-0.00294	-0.03086	0.8976	0.017	2.1427
24	SLV 12	0.02653	-0.00294	-0.03086	0.8976	0.017	2.1427
24	SLV 13	0.14428	-0.00517	-0.08133	-0.2599	0.0801	-0.6283
24	SLV 14	0.14428	-0.00517	-0.08133	-0.2599	0.0801	-0.6283
24	SLV 15	0.14428	-0.00415	-0.08119	0.2744	0.0801	0.6506
24	SLV 16	0.14428	-0.00415	-0.08119	0.2744	0.0801	0.6506
25	SLU 1	-0.01289	-0.00451	0.02667	0.0018	-0.0094	0
25	SLU 2	-0.01289	-0.00451	0.02667	0.0018	-0.0094	0
25	SLU 3	-0.01289	-0.00451	0.02667	0.0018	-0.0094	0
25	SLU 4	-0.01289	-0.00451	0.02667	0.0018	-0.0094	0
25	SLU 5	-0.01289	-0.00451	0.02667	0.0018	-0.0094	0
25	SLU 6	-0.01387	-0.00467	0.02902	0.0019	-0.0101	0
25	SLU 7	-0.01387	-0.00467	0.02902	0.0019	-0.0101	0
25	SLU 8	-0.01387	-0.00467	0.02902	0.0019	-0.0101	0
25	SLU 9	-0.01387	-0.00467	0.02902	0.0019	-0.0101	0
25	SLU 10	-0.01486	-0.00483	0.03138	0.0019	-0.0108	0
25	SLU 11	-0.01486	-0.00483	0.03138	0.0019	-0.0108	0
25	SLU 12	-0.01486	-0.00483	0.03138	0.0019	-0.0108	0
25	SLU 13	-0.01486	-0.00483	0.03138	0.0019	-0.0108	0
25	SLU 14	-0.02122	-0.00545	0.04771	0.0021	-0.015	0
25	SLU 15	-0.02122	-0.00545	0.04771	0.0021	-0.015	0
25	SLU 16	-0.02122	-0.00545	0.04771	0.0021	-0.015	0
25	SLU 17	-0.02122	-0.00545	0.04771	0.0021	-0.015	0
25	SLU 18	-0.0222	-0.0056	0.05007	0.0022	-0.0156	0
25	SLU 19	-0.0222	-0.0056	0.05007	0.0022	-0.0156	0
25	SLU 20	-0.0222	-0.0056	0.05007	0.0022	-0.0156	0
25	SLU 21	-0.0222	-0.0056	0.05007	0.0022	-0.0156	0
25	SLU 22	-0.02319	-0.00576	0.05243	0.0022	-0.0163	0
25	SLU 23	-0.02319	-0.00576	0.05243	0.0022	-0.0163	0
25	SLU 24	-0.02319	-0.00576	0.05243	0.0022	-0.0163	0
25	SLU 25	-0.02319	-0.00576	0.05243	0.0022	-0.0163	0
25	SLU 26	-0.03372	-0.00684	0.07929	0.0026	-0.0233	0.0001
25	SLU 27	-0.03372	-0.00684	0.07929	0.0026	-0.0233	0.0001
25	SLU 28	-0.03372	-0.00684	0.07929	0.0026	-0.0233	0.0001
25	SLU 29	-0.03372	-0.00684	0.07929	0.0026	-0.0233	0.0001
25	SLU 30	-0.0347	-0.007	0.08164	0.0027	-0.024	0.0001
25	SLU 31	-0.0347	-0.007	0.08164	0.0026	-0.024	0.0001
25	SLU 32	-0.0347	-0.007	0.08164	0.0027	-0.024	0.0001
25	SLU 33	-0.0347	-0.007	0.08164	0.0026	-0.024	0.0001
25	SLU 34	-0.01289	-0.00451	0.02667	0.0018	-0.0094	0
25	SLU 35	-0.01289	-0.00451	0.02667	0.0018	-0.0094	0
25	SLU 36	-0.01289	-0.00451	0.02667	0.0018	-0.0094	0
25	SLU 37	-0.01289	-0.00451	0.02667	0.0018	-0.0094	0
25	SLU 38	-0.01289	-0.00451	0.02667	0.0018	-0.0094	0
25	SLU 39	-0.01387	-0.00467	0.02902	0.0019	-0.0101	0
25	SLU 40	-0.01387	-0.00467	0.02902	0.0019	-0.0101	0
25	SLU 41	-0.01387	-0.00467	0.02902	0.0019	-0.0101	0
25	SLU 42	-0.01387	-0.00467	0.02902	0.0019	-0.0101	0
25	SLU 43	-0.01486	-0.00483	0.03138	0.0019	-0.0108	0
25	SLU 44	-0.01486	-0.00483	0.03138	0.0019	-0.0108	0
25	SLU 45	-0.01486	-0.00483	0.03138	0.0019	-0.0108	0

Nodo	Cont.	Spostamento			Rotazione		
Ind.	N.br.	ux	uy	uz	rx	ry	rz
25	SLU 46	-0.01486	-0.00483	0.03138	0.0019	-0.0108	0
25	SLU 47	-0.02122	-0.00545	0.04771	0.0021	-0.015	0
25	SLU 48	-0.02122	-0.00545	0.04771	0.0021	-0.015	0
25	SLU 49	-0.02122	-0.00545	0.04771	0.0021	-0.015	0
25	SLU 50	-0.02122	-0.00545	0.04771	0.0021	-0.015	0
25	SLU 51	-0.0222	-0.0056	0.05007	0.0022	-0.0156	0
25	SLU 52	-0.0222	-0.0056	0.05007	0.0022	-0.0156	0
25	SLU 53	-0.0222	-0.0056	0.05007	0.0022	-0.0156	0
25	SLU 54	-0.0222	-0.0056	0.05007	0.0022	-0.0156	0
25	SLU 55	-0.02319	-0.00576	0.05243	0.0022	-0.0163	0
25	SLU 56	-0.02319	-0.00576	0.05243	0.0022	-0.0163	0
25	SLU 57	-0.02319	-0.00576	0.05243	0.0022	-0.0163	0
25	SLU 58	-0.02319	-0.00576	0.05243	0.0022	-0.0163	0
25	SLU 59	-0.03372	-0.00684	0.07929	0.0026	-0.0233	0.0001
25	SLU 60	-0.03372	-0.00684	0.07929	0.0026	-0.0233	0.0001
25	SLU 61	-0.03372	-0.00684	0.07929	0.0026	-0.0233	0.0001
25	SLU 62	-0.03372	-0.00684	0.07929	0.0026	-0.0233	0.0001
25	SLU 63	-0.0347	-0.007	0.08164	0.0027	-0.024	0.0001
25	SLU 64	-0.0347	-0.007	0.08164	0.0026	-0.024	0.0001
25	SLU 65	-0.0347	-0.007	0.08164	0.0027	-0.024	0.0001
25	SLU 66	-0.0347	-0.007	0.08164	0.0026	-0.024	0.0001
25	SLU 67	-0.01676	-0.00587	0.03466	0.0024	-0.0123	0.0001
25	SLU 68	-0.01676	-0.00587	0.03466	0.0024	-0.0123	0.0001
25	SLU 69	-0.01676	-0.00587	0.03466	0.0024	-0.0123	0.0001
25	SLU 70	-0.01676	-0.00587	0.03466	0.0024	-0.0123	0.0001
25	SLU 71	-0.01676	-0.00587	0.03466	0.0024	-0.0123	0.0001
25	SLU 72	-0.01774	-0.00603	0.03702	0.0024	-0.0129	0.0001
25	SLU 73	-0.01774	-0.00603	0.03702	0.0024	-0.0129	0.0001
25	SLU 74	-0.01774	-0.00603	0.03702	0.0024	-0.0129	0.0001
25	SLU 75	-0.01774	-0.00603	0.03702	0.0024	-0.0129	0.0001
25	SLU 76	-0.01872	-0.00619	0.03938	0.0025	-0.0136	0.0001
25	SLU 77	-0.01872	-0.00619	0.03938	0.0025	-0.0136	0.0001
25	SLU 78	-0.01872	-0.00618	0.03938	0.0025	-0.0136	0.0001
25	SLU 79	-0.01872	-0.00619	0.03938	0.0025	-0.0136	0.0001
25	SLU 80	-0.02509	-0.0068	0.05571	0.0027	-0.0178	0.0001
25	SLU 81	-0.02509	-0.0068	0.05571	0.0027	-0.0178	0.0001
25	SLU 82	-0.02509	-0.0068	0.05571	0.0027	-0.0178	0.0001
25	SLU 83	-0.02509	-0.0068	0.05571	0.0027	-0.0178	0.0001
25	SLU 84	-0.02607	-0.00696	0.05807	0.0027	-0.0185	0.0001
25	SLU 85	-0.02607	-0.00696	0.05807	0.0027	-0.0185	0.0001
25	SLU 86	-0.02607	-0.00696	0.05807	0.0027	-0.0185	0.0001
25	SLU 87	-0.02607	-0.00696	0.05807	0.0027	-0.0185	0.0001
25	SLU 88	-0.02705	-0.00712	0.06043	0.0028	-0.0192	0.0001
25	SLU 89	-0.02705	-0.00712	0.06043	0.0028	-0.0192	0.0001
25	SLU 90	-0.02705	-0.00712	0.06043	0.0028	-0.0192	0.0001
25	SLU 91	-0.02705	-0.00712	0.06043	0.0028	-0.0192	0.0001
25	SLU 92	-0.03759	-0.0082	0.08729	0.0031	-0.0261	0.0001
25	SLU 93	-0.03759	-0.0082	0.08729	0.0031	-0.0261	0.0001
25	SLU 94	-0.03759	-0.0082	0.08729	0.0031	-0.0261	0.0001
25	SLU 95	-0.03759	-0.0082	0.08729	0.0031	-0.0261	0.0001
25	SLU 96	-0.03857	-0.00836	0.08964	0.0032	-0.0268	0.0001
25	SLU 97	-0.03857	-0.00836	0.08964	0.0032	-0.0268	0.0001
25	SLU 98	-0.03857	-0.00836	0.08964	0.0032	-0.0268	0.0001
25	SLU 99	-0.03857	-0.00836	0.08964	0.0032	-0.0268	0.0001
25	SLU 100	-0.01676	-0.00587	0.03466	0.0024	-0.0123	0.0001
25	SLU 101	-0.01676	-0.00587	0.03466	0.0024	-0.0123	0.0001
25	SLU 102	-0.01676	-0.00587	0.03466	0.0024	-0.0123	0.0001
25	SLU 103	-0.01676	-0.00587	0.03466	0.0024	-0.0123	0.0001
25	SLU 104	-0.01676	-0.00587	0.03466	0.0024	-0.0123	0.0001
25	SLU 105	-0.01774	-0.00603	0.03702	0.0024	-0.0129	0.0001
25	SLU 106	-0.01774	-0.00603	0.03702	0.0024	-0.0129	0.0001
25	SLU 107	-0.01774	-0.00603	0.03702	0.0024	-0.0129	0.0001
25	SLU 108	-0.01774	-0.00603	0.03702	0.0024	-0.0129	0.0001
25	SLU 109	-0.01872	-0.00619	0.03938	0.0025	-0.0136	0.0001
25	SLU 110	-0.01872	-0.00619	0.03938	0.0025	-0.0136	0.0001
25	SLU 111	-0.01872	-0.00618	0.03938	0.0025	-0.0136	0.0001
25	SLU 112	-0.01872	-0.00619	0.03938	0.0025	-0.0136	0.0001
25	SLU 113	-0.02509	-0.0068	0.05571	0.0027	-0.0178	0.0001
25	SLU 114	-0.02509	-0.0068	0.05571	0.0027	-0.0178	0.0001
25	SLU 115	-0.02509	-0.0068	0.05571	0.0027	-0.0178	0.0001
25	SLU 116	-0.02509	-0.0068	0.05571	0.0027	-0.0178	0.0001
25	SLU 117	-0.02607	-0.00696	0.05807	0.0027	-0.0185	0.0001
25	SLU 118	-0.02607	-0.00696	0.05807	0.0027	-0.0185	0.0001
25	SLU 119	-0.02607	-0.00696	0.05807	0.0027	-0.0185	0.0001
25	SLU 120	-0.02607	-0.00696	0.05807	0.0027	-0.0185	0.0001
25	SLU 121	-0.02705	-0.00712	0.06043	0.0028	-0.0192	0.0001
25	SLU 122	-0.02705	-0.00712	0.06043	0.0028	-0.0192	0.0001
25	SLU 123	-0.02705	-0.00712	0.06043	0.0028	-0.0192	0.0001
25	SLU 124	-0.02705	-0.00712	0.06043	0.0028	-0.0192	0.0001
25	SLU 125	-0.03759	-0.0082	0.08729	0.0031	-0.0261	0.0001
25	SLU 126	-0.03759	-0.0082	0.08729	0.0031	-0.0261	0.0001
25	SLU 127	-0.03759	-0.0082	0.08729	0.0031	-0.0261	0.0001
25	SLU 128	-0.03759	-0.0082	0.08729	0.0031	-0.0261	0.0001
25	SLU 129	-0.03857	-0.00836	0.08964	0.0032	-0.0268	0.0001
25	SLU 130	-0.03857	-0.00836	0.08964	0.0032	-0.0268	0.0001
25	SLU 131	-0.03857	-0.00836	0.08964	0.0032	-0.0268	0.0001
25	SLU 132	-0.03857	-0.00836	0.08964	0.0032	-0.0268	0.0001
25	SLE RA 1	-0.01289	-0.00451	0.02667	0.0018	-0.0094	0
25	SLE RA 2	-0.01289	-0.00451	0.02667	0.0018	-0.0094	0
25	SLE RA 3	-0.01289	-0.00451	0.02667	0.0018	-0.0094	0
25	SLE RA 4	-0.01289	-0.00451	0.02667	0.0018	-0.0094	0
25	SLE RA 5	-0.01289	-0.00451	0.02667	0.0018	-0.0094	0
25	SLE RA 6	-0.01354	-0.00462	0.02824	0.0019	-0.0099	0
25	SLE RA 7	-0.01354	-0.00462	0.02824	0.0019	-0.0099	0
25	SLE RA 8	-0.01354	-0.00462	0.02824	0.0019	-0.0099	0

Nodo	Cont.	Spostamento			Rotazione		
Ind.	N.br.	ux	uy	uz	rx	ry	rz
25	SLE RA 9	-0.01354	-0.00462	0.02824	0.0019	-0.0099	0
25	SLE RA 10	-0.0142	-0.00473	0.02981	0.0019	-0.0103	0
25	SLE RA 11	-0.0142	-0.00473	0.02981	0.0019	-0.0103	0
25	SLE RA 12	-0.0142	-0.00473	0.02981	0.0019	-0.0103	0
25	SLE RA 13	-0.0142	-0.00473	0.02981	0.0019	-0.0103	0
25	SLE RA 14	-0.01844	-0.00514	0.0407	0.002	-0.0131	0
25	SLE RA 15	-0.01844	-0.00514	0.0407	0.002	-0.0131	0
25	SLE RA 16	-0.01844	-0.00513	0.0407	0.002	-0.0131	0
25	SLE RA 17	-0.01844	-0.00513	0.0407	0.002	-0.0131	0
25	SLE RA 18	-0.0191	-0.00524	0.04227	0.0021	-0.0136	0
25	SLE RA 19	-0.0191	-0.00524	0.04227	0.0021	-0.0136	0
25	SLE RA 20	-0.0191	-0.00524	0.04227	0.0021	-0.0136	0
25	SLE RA 21	-0.0191	-0.00524	0.04227	0.0021	-0.0136	0
25	SLE RA 22	-0.01975	-0.00535	0.04384	0.0021	-0.014	0
25	SLE RA 23	-0.01975	-0.00535	0.04384	0.0021	-0.014	0
25	SLE RA 24	-0.01975	-0.00535	0.04384	0.0021	-0.014	0
25	SLE RA 25	-0.01975	-0.00535	0.04384	0.0021	-0.014	0
25	SLE RA 26	-0.02678	-0.00607	0.06175	0.0023	-0.0187	0.0001
25	SLE RA 27	-0.02678	-0.00607	0.06175	0.0023	-0.0187	0.0001
25	SLE RA 28	-0.02678	-0.00607	0.06175	0.0023	-0.0187	0.0001
25	SLE RA 29	-0.02678	-0.00607	0.06175	0.0023	-0.0187	0.0001
25	SLE RA 30	-0.02743	-0.00617	0.06332	0.0024	-0.0191	0.0001
25	SLE RA 31	-0.02743	-0.00617	0.06332	0.0024	-0.0191	0.0001
25	SLE RA 32	-0.02743	-0.00617	0.06332	0.0024	-0.0191	0.0001
25	SLE RA 33	-0.02743	-0.00617	0.06332	0.0024	-0.0191	0.0001
25	SLE FR 1	-0.01289	-0.00451	0.02667	0.0018	-0.0094	0
25	SLE FR 2	-0.01289	-0.00451	0.02667	0.0018	-0.0094	0
25	SLE FR 3	-0.01289	-0.00451	0.02667	0.0018	-0.0094	0
25	SLE FR 4	-0.01315	-0.00456	0.02729	0.0018	-0.0096	0
25	SLE FR 5	-0.01844	-0.00514	0.0407	0.002	-0.0131	0
25	SLE QP 1	-0.01289	-0.00451	0.02667	0.0018	-0.0094	0
25	SLO 1	-0.10208	-0.00826	0.18687	-0.0301	-0.0024	-0.0012
25	SLO 2	-0.10208	-0.00826	0.18687	-0.0301	-0.0024	-0.0012
25	SLO 3	-0.10209	-0.00074	0.18688	0.0338	-0.0024	0.0013
25	SLO 4	-0.10209	-0.00074	0.18688	0.0338	-0.0024	0.0013
25	SLO 5	-0.03964	-0.01704	0.0747	-0.1046	-0.0073	-0.0041
25	SLO 6	-0.03964	-0.01704	0.0747	-0.1046	-0.0073	-0.0041
25	SLO 7	-0.03965	0.00802	0.07475	0.1083	-0.0073	0.0041
25	SLO 8	-0.03965	0.00802	0.07475	0.1083	-0.0073	0.0041
25	SLO 9	0.01387	-0.01705	-0.02142	-0.1047	-0.0116	-0.0041
25	SLO 10	0.01387	-0.01705	-0.02142	-0.1047	-0.0116	-0.0041
25	SLO 11	0.01387	0.00801	-0.02137	0.1083	-0.0115	0.0041
25	SLO 12	0.01387	0.00801	-0.02137	0.1083	-0.0115	0.0041
25	SLO 13	0.07631	-0.00829	-0.13355	-0.0302	-0.0165	-0.0012
25	SLO 14	0.07631	-0.00829	-0.13355	-0.0302	-0.0165	-0.0012
25	SLO 15	0.07631	-0.00077	-0.13354	0.0337	-0.0164	0.0013
25	SLO 16	0.07631	-0.00077	-0.13354	0.0337	-0.0164	0.0013
25	SLD 1	-0.08608	-0.00798	0.15811	-0.0276	-0.0037	-0.0011
25	SLD 2	-0.08608	-0.00798	0.15811	-0.0276	-0.0037	-0.0011
25	SLD 3	-0.08608	-0.00103	0.15813	0.0314	-0.0037	0.0012
25	SLD 4	-0.08608	-0.00103	0.15813	0.0314	-0.0037	0.0012
25	SLD 5	-0.03484	-0.01609	0.06608	-0.0965	-0.0077	-0.0038
25	SLD 6	-0.03484	-0.01609	0.06608	-0.0965	-0.0077	-0.0038
25	SLD 7	-0.03485	0.00707	0.06612	0.1002	-0.0077	0.0038
25	SLD 8	-0.03485	0.00707	0.06612	0.1002	-0.0077	0.0038
25	SLD 9	0.00907	-0.0161	-0.01279	-0.0966	-0.0112	-0.0038
25	SLD 10	0.00907	-0.0161	-0.01279	-0.0966	-0.0112	-0.0038
25	SLD 11	0.00906	0.00706	-0.01275	0.1002	-0.0111	0.0038
25	SLD 12	0.00906	0.00706	-0.01275	0.1002	-0.0111	0.0038
25	SLD 13	0.0603	-0.008	-0.1048	-0.0278	-0.0152	-0.0011
25	SLD 14	0.0603	-0.008	-0.1048	-0.0278	-0.0152	-0.0011
25	SLD 15	0.0603	-0.00105	-0.10478	0.0313	-0.0152	0.0012
25	SLD 16	0.0603	-0.00105	-0.10478	0.0313	-0.0152	0.0012
25	SLV 1	-0.17639	-0.01365	0.32032	-0.0759	0.0034	-0.003
25	SLV 2	-0.17639	-0.01365	0.32032	-0.0759	0.0034	-0.003
25	SLV 3	-0.1764	0.00467	0.32036	0.0798	0.0034	0.003
25	SLV 4	-0.1764	0.00467	0.32036	0.0798	0.0034	0.003
25	SLV 5	-0.06193	-0.03505	0.11471	-0.2576	-0.0056	-0.01
25	SLV 6	-0.06193	-0.03505	0.11471	-0.2576	-0.0056	-0.01
25	SLV 7	-0.06195	0.02603	0.11483	0.2613	-0.0055	0.01
25	SLV 8	-0.06195	0.02603	0.11483	0.2613	-0.0055	0.01
25	SLV 9	0.03617	-0.03506	-0.0615	-0.2577	-0.0133	-0.01
25	SLV 10	0.03617	-0.03506	-0.0615	-0.2577	-0.0133	-0.01
25	SLV 11	0.03615	0.02602	-0.06138	0.2612	-0.0132	0.01
25	SLV 12	0.03615	0.02602	-0.06138	0.2612	-0.0132	0.01
25	SLV 13	0.15062	-0.0137	-0.26702	-0.0761	-0.0223	-0.003
25	SLV 14	0.15062	-0.0137	-0.26702	-0.0761	-0.0223	-0.003
25	SLV 15	0.15061	0.00463	-0.26699	0.0795	-0.0223	0.003
25	SLV 16	0.15061	0.00463	-0.26699	0.0795	-0.0223	0.003
26	SLU 1	0.01289	-0.00451	0.02667	0.0018	0.0094	0
26	SLU 2	0.01289	-0.00451	0.02667	0.0018	0.0094	0
26	SLU 3	0.01289	-0.00451	0.02667	0.0018	0.0094	0
26	SLU 4	0.01289	-0.00451	0.02667	0.0018	0.0094	0
26	SLU 5	0.01289	-0.00451	0.02667	0.0018	0.0094	0
26	SLU 6	0.01391	-0.00467	0.0291	0.0019	0.0101	0
26	SLU 7	0.01391	-0.00467	0.0291	0.0019	0.0101	0
26	SLU 8	0.01391	-0.00467	0.0291	0.0019	0.0101	0
26	SLU 9	0.01391	-0.00467	0.0291	0.0019	0.0101	0
26	SLU 10	0.01494	-0.00483	0.03153	0.0019	0.0108	0
26	SLU 11	0.01494	-0.00483	0.03153	0.0019	0.0108	0
26	SLU 12	0.01494	-0.00483	0.03153	0.0019	0.0108	0
26	SLU 13	0.01494	-0.00483	0.03153	0.0019	0.0108	0
26	SLU 14	0.02129	-0.00545	0.04784	0.0021	0.015	0
26	SLU 15	0.02129	-0.00545	0.04784	0.0021	0.015	0
26	SLU 16	0.02129	-0.00545	0.04784	0.0021	0.015	0

Nodo	Cont.	Spostamento			Rotazione		
Ind.	N.br.	ux	uy	uz	rx	ry	rz
26	SLU 17	0.02129	-0.00545	0.04784	0.0021	0.015	0
26	SLU 18	0.02231	-0.0056	0.05027	0.0022	0.0156	0
26	SLU 19	0.02231	-0.0056	0.05027	0.0022	0.0156	0
26	SLU 20	0.02231	-0.0056	0.05027	0.0022	0.0156	0
26	SLU 21	0.02231	-0.0056	0.05027	0.0022	0.0156	0
26	SLU 22	0.02333	-0.00576	0.0527	0.0022	0.0163	0
26	SLU 23	0.02333	-0.00576	0.0527	0.0022	0.0163	0
26	SLU 24	0.02333	-0.00576	0.0527	0.0022	0.0163	0
26	SLU 25	0.02333	-0.00576	0.0527	0.0022	0.0163	0
26	SLU 26	0.03389	-0.00684	0.0796	0.0026	0.0233	-0.0001
26	SLU 27	0.03389	-0.00684	0.0796	0.0026	0.0233	-0.0001
26	SLU 28	0.03389	-0.00684	0.0796	0.0026	0.0233	-0.0001
26	SLU 29	0.03389	-0.00684	0.0796	0.0026	0.0233	-0.0001
26	SLU 30	0.03491	-0.007	0.08203	0.0026	0.0239	-0.0001
26	SLU 31	0.03491	-0.007	0.08203	0.0026	0.0239	-0.0001
26	SLU 32	0.03491	-0.007	0.08203	0.0026	0.0239	-0.0001
26	SLU 33	0.03491	-0.007	0.08203	0.0026	0.0239	-0.0001
26	SLU 34	0.01289	-0.00451	0.02667	0.0018	0.0094	0
26	SLU 35	0.01289	-0.00451	0.02667	0.0018	0.0094	0
26	SLU 36	0.01289	-0.00451	0.02667	0.0018	0.0094	0
26	SLU 37	0.01289	-0.00451	0.02667	0.0018	0.0094	0
26	SLU 38	0.01289	-0.00451	0.02667	0.0018	0.0094	0
26	SLU 39	0.01391	-0.00467	0.0291	0.0019	0.0101	0
26	SLU 40	0.01391	-0.00467	0.0291	0.0019	0.0101	0
26	SLU 41	0.01391	-0.00467	0.0291	0.0019	0.0101	0
26	SLU 42	0.01391	-0.00467	0.0291	0.0019	0.0101	0
26	SLU 43	0.01494	-0.00483	0.03153	0.0019	0.0108	0
26	SLU 44	0.01494	-0.00483	0.03153	0.0019	0.0108	0
26	SLU 45	0.01494	-0.00483	0.03153	0.0019	0.0108	0
26	SLU 46	0.01494	-0.00483	0.03153	0.0019	0.0108	0
26	SLU 47	0.02129	-0.00545	0.04784	0.0021	0.015	0
26	SLU 48	0.02129	-0.00545	0.04784	0.0021	0.015	0
26	SLU 49	0.02129	-0.00545	0.04784	0.0021	0.015	0
26	SLU 50	0.02129	-0.00545	0.04784	0.0021	0.015	0
26	SLU 51	0.02231	-0.0056	0.05027	0.0022	0.0156	0
26	SLU 52	0.02231	-0.0056	0.05027	0.0022	0.0156	0
26	SLU 53	0.02231	-0.0056	0.05027	0.0022	0.0156	0
26	SLU 54	0.02231	-0.0056	0.05027	0.0022	0.0156	0
26	SLU 55	0.02333	-0.00576	0.0527	0.0022	0.0163	0
26	SLU 56	0.02333	-0.00576	0.0527	0.0022	0.0163	0
26	SLU 57	0.02333	-0.00576	0.0527	0.0022	0.0163	0
26	SLU 58	0.02333	-0.00576	0.0527	0.0022	0.0163	0
26	SLU 59	0.03389	-0.00684	0.0796	0.0026	0.0233	-0.0001
26	SLU 60	0.03389	-0.00684	0.0796	0.0026	0.0233	-0.0001
26	SLU 61	0.03389	-0.00684	0.0796	0.0026	0.0233	-0.0001
26	SLU 62	0.03389	-0.00684	0.0796	0.0026	0.0233	-0.0001
26	SLU 63	0.03491	-0.007	0.08203	0.0026	0.0239	-0.0001
26	SLU 64	0.03491	-0.007	0.08203	0.0026	0.0239	-0.0001
26	SLU 65	0.03491	-0.007	0.08203	0.0026	0.0239	-0.0001
26	SLU 66	0.03491	-0.007	0.08203	0.0026	0.0239	-0.0001
26	SLU 67	0.01676	-0.00587	0.03466	0.0024	0.0123	-0.0001
26	SLU 68	0.01676	-0.00587	0.03466	0.0024	0.0123	-0.0001
26	SLU 69	0.01676	-0.00587	0.03466	0.0024	0.0123	-0.0001
26	SLU 70	0.01676	-0.00587	0.03466	0.0024	0.0123	-0.0001
26	SLU 71	0.01676	-0.00587	0.03466	0.0024	0.0123	-0.0001
26	SLU 72	0.01778	-0.00603	0.0371	0.0024	0.0129	-0.0001
26	SLU 73	0.01778	-0.00603	0.0371	0.0024	0.0129	-0.0001
26	SLU 74	0.01778	-0.00603	0.0371	0.0024	0.0129	-0.0001
26	SLU 75	0.01778	-0.00603	0.0371	0.0024	0.0129	-0.0001
26	SLU 76	0.0188	-0.00618	0.03953	0.0025	0.0136	-0.0001
26	SLU 77	0.0188	-0.00619	0.03953	0.0025	0.0136	-0.0001
26	SLU 78	0.0188	-0.00618	0.03953	0.0025	0.0136	-0.0001
26	SLU 79	0.0188	-0.00618	0.03953	0.0025	0.0136	-0.0001
26	SLU 80	0.02516	-0.0068	0.05584	0.0027	0.0178	-0.0001
26	SLU 81	0.02516	-0.0068	0.05584	0.0027	0.0178	-0.0001
26	SLU 82	0.02516	-0.0068	0.05584	0.0027	0.0178	-0.0001
26	SLU 83	0.02516	-0.0068	0.05584	0.0027	0.0178	-0.0001
26	SLU 84	0.02618	-0.00696	0.05827	0.0027	0.0185	-0.0001
26	SLU 85	0.02618	-0.00696	0.05827	0.0027	0.0185	-0.0001
26	SLU 86	0.02618	-0.00696	0.05827	0.0027	0.0185	-0.0001
26	SLU 87	0.02618	-0.00696	0.05827	0.0027	0.0185	-0.0001
26	SLU 88	0.0272	-0.00712	0.0607	0.0028	0.0191	-0.0001
26	SLU 89	0.0272	-0.00712	0.0607	0.0028	0.0191	-0.0001
26	SLU 90	0.0272	-0.00712	0.0607	0.0028	0.0191	-0.0001
26	SLU 91	0.0272	-0.00712	0.0607	0.0028	0.0191	-0.0001
26	SLU 92	0.03775	-0.0082	0.0876	0.0031	0.0261	-0.0001
26	SLU 93	0.03775	-0.0082	0.0876	0.0031	0.0261	-0.0001
26	SLU 94	0.03775	-0.0082	0.0876	0.0031	0.0261	-0.0001
26	SLU 95	0.03775	-0.0082	0.0876	0.0031	0.0261	-0.0001
26	SLU 96	0.03878	-0.00835	0.09003	0.0032	0.0268	-0.0001
26	SLU 97	0.03878	-0.00835	0.09003	0.0032	0.0268	-0.0001
26	SLU 98	0.03878	-0.00835	0.09003	0.0032	0.0268	-0.0001
26	SLU 99	0.03878	-0.00835	0.09003	0.0032	0.0268	-0.0001
26	SLU 100	0.01676	-0.00587	0.03466	0.0024	0.0123	-0.0001
26	SLU 101	0.01676	-0.00587	0.03466	0.0024	0.0123	-0.0001
26	SLU 102	0.01676	-0.00587	0.03466	0.0024	0.0123	-0.0001
26	SLU 103	0.01676	-0.00587	0.03466	0.0024	0.0123	-0.0001
26	SLU 104	0.01676	-0.00587	0.03466	0.0024	0.0123	-0.0001
26	SLU 105	0.01778	-0.00603	0.0371	0.0024	0.0129	-0.0001
26	SLU 106	0.01778	-0.00603	0.0371	0.0024	0.0129	-0.0001
26	SLU 107	0.01778	-0.00603	0.0371	0.0024	0.0129	-0.0001
26	SLU 108	0.01778	-0.00603	0.0371	0.0024	0.0129	-0.0001
26	SLU 109	0.0188	-0.00618	0.03953	0.0025	0.0136	-0.0001
26	SLU 110	0.0188	-0.00619	0.03953	0.0025	0.0136	-0.0001
26	SLU 111	0.0188	-0.00618	0.03953	0.0025	0.0136	-0.0001

Nodo	Cont.	Spostamento			Rotazione		
Ind.	N.br.	ux	uy	uz	rx	ry	rz
26	SLU 112	0.0188	-0.00618	0.03953	0.0025	0.0136	-0.0001
26	SLU 113	0.02516	-0.0068	0.05584	0.0027	0.0178	-0.0001
26	SLU 114	0.02516	-0.0068	0.05584	0.0027	0.0178	-0.0001
26	SLU 115	0.02516	-0.0068	0.05584	0.0027	0.0178	-0.0001
26	SLU 116	0.02516	-0.0068	0.05584	0.0027	0.0178	-0.0001
26	SLU 117	0.02618	-0.00696	0.05827	0.0027	0.0185	-0.0001
26	SLU 118	0.02618	-0.00696	0.05827	0.0027	0.0185	-0.0001
26	SLU 119	0.02618	-0.00696	0.05827	0.0027	0.0185	-0.0001
26	SLU 120	0.02618	-0.00696	0.05827	0.0027	0.0185	-0.0001
26	SLU 121	0.0272	-0.00712	0.0607	0.0028	0.0191	-0.0001
26	SLU 122	0.0272	-0.00712	0.0607	0.0028	0.0191	-0.0001
26	SLU 123	0.0272	-0.00712	0.0607	0.0028	0.0191	-0.0001
26	SLU 124	0.0272	-0.00712	0.0607	0.0028	0.0191	-0.0001
26	SLU 125	0.03775	-0.0082	0.0876	0.0031	0.0261	-0.0001
26	SLU 126	0.03775	-0.0082	0.0876	0.0031	0.0261	-0.0001
26	SLU 127	0.03775	-0.0082	0.0876	0.0031	0.0261	-0.0001
26	SLU 128	0.03775	-0.0082	0.0876	0.0031	0.0261	-0.0001
26	SLU 129	0.03878	-0.00835	0.09003	0.0032	0.0268	-0.0001
26	SLU 130	0.03878	-0.00835	0.09003	0.0032	0.0268	-0.0001
26	SLU 131	0.03878	-0.00835	0.09003	0.0032	0.0268	-0.0001
26	SLU 132	0.03878	-0.00835	0.09003	0.0032	0.0268	-0.0001
26	SLE RA 1	0.01289	-0.00451	0.02667	0.0018	0.0094	0
26	SLE RA 2	0.01289	-0.00451	0.02667	0.0018	0.0094	0
26	SLE RA 3	0.01289	-0.00451	0.02667	0.0018	0.0094	0
26	SLE RA 4	0.01289	-0.00451	0.02667	0.0018	0.0094	0
26	SLE RA 5	0.01289	-0.00451	0.02667	0.0018	0.0094	0
26	SLE RA 6	0.01357	-0.00462	0.02829	0.0019	0.0099	0
26	SLE RA 7	0.01357	-0.00462	0.02829	0.0019	0.0099	0
26	SLE RA 8	0.01357	-0.00462	0.02829	0.0019	0.0099	0
26	SLE RA 9	0.01357	-0.00462	0.02829	0.0019	0.0099	0
26	SLE RA 10	0.01425	-0.00473	0.02991	0.0019	0.0103	0
26	SLE RA 11	0.01425	-0.00473	0.02991	0.0019	0.0103	0
26	SLE RA 12	0.01425	-0.00473	0.02991	0.0019	0.0103	0
26	SLE RA 13	0.01425	-0.00473	0.02991	0.0019	0.0103	0
26	SLE RA 14	0.01849	-0.00514	0.04078	0.002	0.0131	0
26	SLE RA 15	0.01849	-0.00513	0.04078	0.002	0.0131	0
26	SLE RA 16	0.01849	-0.00513	0.04078	0.002	0.0131	0
26	SLE RA 17	0.01849	-0.00513	0.04078	0.002	0.0131	0
26	SLE RA 18	0.01917	-0.00524	0.0424	0.0021	0.0136	0
26	SLE RA 19	0.01917	-0.00524	0.0424	0.0021	0.0136	0
26	SLE RA 20	0.01917	-0.00524	0.0424	0.0021	0.0136	0
26	SLE RA 21	0.01917	-0.00524	0.0424	0.0021	0.0136	0
26	SLE RA 22	0.01985	-0.00535	0.04402	0.0021	0.014	0
26	SLE RA 23	0.01985	-0.00535	0.04402	0.0021	0.014	0
26	SLE RA 24	0.01985	-0.00535	0.04402	0.0021	0.014	0
26	SLE RA 25	0.01985	-0.00535	0.04402	0.0021	0.014	0
26	SLE RA 26	0.02689	-0.00607	0.06195	0.0023	0.0187	-0.0001
26	SLE RA 27	0.02689	-0.00607	0.06195	0.0023	0.0187	-0.0001
26	SLE RA 28	0.02689	-0.00607	0.06195	0.0023	0.0187	-0.0001
26	SLE RA 29	0.02689	-0.00607	0.06195	0.0023	0.0187	-0.0001
26	SLE RA 30	0.02757	-0.00617	0.06358	0.0024	0.0191	-0.0001
26	SLE RA 31	0.02757	-0.00617	0.06357	0.0024	0.0191	-0.0001
26	SLE RA 32	0.02757	-0.00617	0.06358	0.0024	0.0191	-0.0001
26	SLE RA 33	0.02757	-0.00617	0.06358	0.0024	0.0191	-0.0001
26	SLE FR 1	0.01289	-0.00451	0.02667	0.0018	0.0094	0
26	SLE FR 2	0.01289	-0.00451	0.02667	0.0018	0.0094	0
26	SLE FR 3	0.01289	-0.00451	0.02667	0.0018	0.0094	0
26	SLE FR 4	0.01316	-0.00456	0.02731	0.0018	0.0096	0
26	SLE FR 5	0.01849	-0.00514	0.04078	0.002	0.0131	0
26	SLE QP 1	0.01289	-0.00451	0.02667	0.0018	0.0094	0
26	SLO 1	-0.07631	-0.00829	-0.13355	-0.0302	0.0165	0.0012
26	SLO 2	-0.07631	-0.00829	-0.13355	-0.0302	0.0165	0.0012
26	SLO 3	-0.07631	-0.00077	-0.13354	0.0337	0.0164	-0.0013
26	SLO 4	-0.07631	-0.00077	-0.13354	0.0337	0.0164	-0.0013
26	SLO 5	-0.01387	-0.01705	-0.02142	-0.1047	0.0116	0.0041
26	SLO 6	-0.01387	-0.01705	-0.02142	-0.1047	0.0116	0.0041
26	SLO 7	-0.01387	0.00801	-0.02137	0.1083	0.0115	-0.0041
26	SLO 8	-0.01387	0.00801	-0.02137	0.1083	0.0115	-0.0041
26	SLO 9	0.03964	-0.01704	0.0747	-0.1046	0.0073	0.0041
26	SLO 10	0.03964	-0.01704	0.0747	-0.1046	0.0073	0.0041
26	SLO 11	0.03965	0.00802	0.07475	0.1083	0.0073	-0.0041
26	SLO 12	0.03965	0.00802	0.07475	0.1083	0.0073	-0.0041
26	SLO 13	0.10208	-0.00826	0.18687	-0.0301	0.0024	0.0012
26	SLO 14	0.10208	-0.00826	0.18687	-0.0301	0.0024	0.0012
26	SLO 15	0.10209	-0.00074	0.18688	0.0338	0.0024	-0.0013
26	SLO 16	0.10209	-0.00074	0.18688	0.0338	0.0024	-0.0013
26	SLD 1	-0.0603	-0.008	-0.1048	-0.0278	0.0152	0.0011
26	SLD 2	-0.0603	-0.008	-0.1048	-0.0278	0.0152	0.0011
26	SLD 3	-0.0603	-0.00105	-0.10478	0.0313	0.0152	-0.0012
26	SLD 4	-0.0603	-0.00105	-0.10478	0.0313	0.0152	-0.0012
26	SLD 5	-0.00907	-0.0161	-0.01279	-0.0966	0.0112	0.0038
26	SLD 6	-0.00907	-0.0161	-0.01279	-0.0966	0.0112	0.0038
26	SLD 7	-0.00906	0.00706	-0.01275	0.1002	0.0111	-0.0038
26	SLD 8	-0.00906	0.00706	-0.01275	0.1002	0.0111	-0.0038
26	SLD 9	0.03484	-0.01609	0.06608	-0.0965	0.0077	0.0038
26	SLD 10	0.03484	-0.01609	0.06608	-0.0965	0.0077	0.0038
26	SLD 11	0.03485	0.00707	0.06612	0.1002	0.0077	-0.0038
26	SLD 12	0.03485	0.00707	0.06612	0.1002	0.0077	-0.0038
26	SLD 13	0.08608	-0.00798	0.15811	-0.0276	0.0037	0.0011
26	SLD 14	0.08608	-0.00798	0.15811	-0.0276	0.0037	0.0011
26	SLD 15	0.08608	-0.00103	0.15813	0.0314	0.0037	-0.0012
26	SLD 16	0.08608	-0.00103	0.15813	0.0314	0.0037	-0.0012
26	SLV 1	-0.15062	-0.0137	-0.26702	-0.0761	0.0223	0.003
26	SLV 2	-0.15062	-0.0137	-0.26702	-0.0761	0.0223	0.003
26	SLV 3	-0.15061	0.00463	-0.26699	0.0795	0.0223	-0.003

Nodo	Cont.	Spostamento			Rotazione		
Ind.	N.br.	ux	uy	uz	rx	ry	rz
26	SLV 4	-0.15061	0.00463	-0.26699	0.0795	0.0223	-0.003
26	SLV 5	-0.03617	-0.03506	-0.0615	-0.2577	0.0133	0.01
26	SLV 6	-0.03617	-0.03506	-0.0615	-0.2577	0.0133	0.01
26	SLV 7	-0.03615	0.02602	-0.06138	0.2612	0.0132	-0.01
26	SLV 8	-0.03615	0.02602	-0.06138	0.2612	0.0132	-0.01
26	SLV 9	0.06193	-0.03505	0.11471	-0.2576	0.0056	0.01
26	SLV 10	0.06193	-0.03505	0.11471	-0.2576	0.0056	0.01
26	SLV 11	0.06195	0.02603	0.11483	0.2613	0.0055	-0.01
26	SLV 12	0.06195	0.02603	0.11483	0.2613	0.0055	-0.01
26	SLV 13	0.17639	-0.01365	0.32032	-0.0759	-0.0034	0.003
26	SLV 14	0.17639	-0.01365	0.32032	-0.0759	-0.0034	0.003
26	SLV 15	0.1764	0.00467	0.32036	0.0798	-0.0034	-0.003
26	SLV 16	0.1764	0.00467	0.32036	0.0798	-0.0034	-0.003
27	SLU 1	0.02394	-0.00462	-0.0096	0.0072	0.0101	-0.0111
27	SLU 2	0.02394	-0.00462	-0.0096	0.0072	0.0101	-0.0111
27	SLU 3	0.02394	-0.00462	-0.0096	0.0072	0.0101	-0.0111
27	SLU 4	0.02394	-0.00462	-0.0096	0.0072	0.0101	-0.0111
27	SLU 5	0.02394	-0.00462	-0.0096	0.0072	0.0101	-0.0111
27	SLU 6	0.02568	-0.00478	-0.00956	0.0075	0.0108	-0.0115
27	SLU 7	0.02568	-0.00478	-0.00956	0.0075	0.0108	-0.0115
27	SLU 8	0.02568	-0.00478	-0.00956	0.0075	0.0108	-0.0115
27	SLU 9	0.02568	-0.00478	-0.00956	0.0075	0.0108	-0.0115
27	SLU 10	0.02742	-0.00494	-0.00951	0.0077	0.0115	-0.0119
27	SLU 11	0.02742	-0.00494	-0.00951	0.0077	0.0115	-0.0119
27	SLU 12	0.02742	-0.00494	-0.00951	0.0077	0.0115	-0.0119
27	SLU 13	0.02742	-0.00494	-0.00951	0.0077	0.0115	-0.0119
27	SLU 14	0.03768	-0.00557	-0.00783	0.0086	0.0162	-0.0132
27	SLU 15	0.03768	-0.00557	-0.00783	0.0086	0.0162	-0.0133
27	SLU 16	0.03768	-0.00557	-0.00783	0.0086	0.0162	-0.0133
27	SLU 17	0.03768	-0.00557	-0.00783	0.0086	0.0162	-0.0133
27	SLU 18	0.03942	-0.00573	-0.00778	0.0089	0.0169	-0.0136
27	SLU 19	0.03942	-0.00573	-0.00778	0.0089	0.0169	-0.0136
27	SLU 20	0.03942	-0.00573	-0.00778	0.0089	0.0169	-0.0137
27	SLU 21	0.03942	-0.00573	-0.00778	0.0089	0.0169	-0.0137
27	SLU 22	0.04116	-0.00589	-0.00773	0.0091	0.0176	-0.014
27	SLU 23	0.04116	-0.00589	-0.00773	0.0091	0.0176	-0.014
27	SLU 24	0.04116	-0.00589	-0.00773	0.0091	0.0176	-0.014
27	SLU 25	0.04116	-0.00589	-0.00773	0.0091	0.0176	-0.014
27	SLU 26	0.0583	-0.00699	-0.00516	0.0108	0.0254	-0.0164
27	SLU 27	0.0583	-0.00699	-0.00516	0.0108	0.0254	-0.0164
27	SLU 28	0.0583	-0.00699	-0.00516	0.0108	0.0254	-0.0164
27	SLU 29	0.0583	-0.00699	-0.00516	0.0108	0.0254	-0.0164
27	SLU 30	0.06004	-0.00715	-0.00511	0.011	0.0261	-0.0168
27	SLU 31	0.06004	-0.00715	-0.00511	0.011	0.0261	-0.0168
27	SLU 32	0.06004	-0.00715	-0.00511	0.011	0.0261	-0.0168
27	SLU 33	0.06004	-0.00715	-0.00511	0.011	0.0261	-0.0168
27	SLU 34	0.02394	-0.00462	-0.0096	0.0072	0.0101	-0.0111
27	SLU 35	0.02394	-0.00462	-0.0096	0.0072	0.0101	-0.0111
27	SLU 36	0.02394	-0.00462	-0.0096	0.0072	0.0101	-0.0111
27	SLU 37	0.02394	-0.00462	-0.0096	0.0072	0.0101	-0.0111
27	SLU 38	0.02394	-0.00462	-0.0096	0.0072	0.0101	-0.0111
27	SLU 39	0.02568	-0.00478	-0.00956	0.0075	0.0108	-0.0115
27	SLU 40	0.02568	-0.00478	-0.00956	0.0075	0.0108	-0.0115
27	SLU 41	0.02568	-0.00478	-0.00956	0.0075	0.0108	-0.0115
27	SLU 42	0.02568	-0.00478	-0.00956	0.0075	0.0108	-0.0115
27	SLU 43	0.02742	-0.00494	-0.00951	0.0077	0.0115	-0.0119
27	SLU 44	0.02742	-0.00494	-0.00951	0.0077	0.0115	-0.0119
27	SLU 45	0.02742	-0.00494	-0.00951	0.0077	0.0115	-0.0119
27	SLU 46	0.02742	-0.00494	-0.00951	0.0077	0.0115	-0.0119
27	SLU 47	0.03768	-0.00557	-0.00783	0.0086	0.0162	-0.0132
27	SLU 48	0.03768	-0.00557	-0.00783	0.0086	0.0162	-0.0133
27	SLU 49	0.03768	-0.00557	-0.00783	0.0086	0.0162	-0.0133
27	SLU 50	0.03768	-0.00557	-0.00783	0.0086	0.0162	-0.0133
27	SLU 51	0.03942	-0.00573	-0.00778	0.0089	0.0169	-0.0136
27	SLU 52	0.03942	-0.00573	-0.00778	0.0089	0.0169	-0.0136
27	SLU 53	0.03942	-0.00573	-0.00778	0.0089	0.0169	-0.0137
27	SLU 54	0.03942	-0.00573	-0.00778	0.0089	0.0169	-0.0137
27	SLU 55	0.04116	-0.00589	-0.00773	0.0091	0.0176	-0.014
27	SLU 56	0.04116	-0.00589	-0.00773	0.0091	0.0176	-0.014
27	SLU 57	0.04116	-0.00589	-0.00773	0.0091	0.0176	-0.014
27	SLU 58	0.04116	-0.00589	-0.00773	0.0091	0.0176	-0.014
27	SLU 59	0.0583	-0.00699	-0.00516	0.0108	0.0254	-0.0164
27	SLU 60	0.0583	-0.00699	-0.00516	0.0108	0.0254	-0.0164
27	SLU 61	0.0583	-0.00699	-0.00516	0.0108	0.0254	-0.0164
27	SLU 62	0.0583	-0.00699	-0.00516	0.0108	0.0254	-0.0164
27	SLU 63	0.06004	-0.00715	-0.00511	0.011	0.0261	-0.0168
27	SLU 64	0.06004	-0.00715	-0.00511	0.011	0.0261	-0.0168
27	SLU 65	0.06004	-0.00715	-0.00511	0.011	0.0261	-0.0168
27	SLU 66	0.06004	-0.00715	-0.00511	0.011	0.0261	-0.0168
27	SLU 67	0.03112	-0.006	-0.01249	0.0094	0.0131	-0.0144
27	SLU 68	0.03112	-0.006	-0.01249	0.0094	0.0131	-0.0144
27	SLU 69	0.03112	-0.006	-0.01249	0.0094	0.0131	-0.0145
27	SLU 70	0.03112	-0.006	-0.01249	0.0094	0.0131	-0.0145
27	SLU 71	0.03112	-0.006	-0.01249	0.0094	0.0131	-0.0145
27	SLU 72	0.03286	-0.00617	-0.01244	0.0096	0.0138	-0.0148
27	SLU 73	0.03286	-0.00617	-0.01244	0.0096	0.0138	-0.0149
27	SLU 74	0.03286	-0.00616	-0.01244	0.0096	0.0138	-0.0149
27	SLU 75	0.03286	-0.00616	-0.01244	0.0096	0.0138	-0.0149
27	SLU 76	0.0346	-0.00633	-0.01239	0.0099	0.0145	-0.0152
27	SLU 77	0.0346	-0.00633	-0.01239	0.0099	0.0145	-0.0152
27	SLU 78	0.0346	-0.00633	-0.01239	0.0099	0.0145	-0.0152
27	SLU 79	0.0346	-0.00633	-0.01239	0.0099	0.0145	-0.0152
27	SLU 80	0.04486	-0.00695	-0.01071	0.0108	0.0192	-0.0166
27	SLU 81	0.04486	-0.00695	-0.01071	0.0108	0.0192	-0.0166
27	SLU 82	0.04486	-0.00695	-0.01071	0.0108	0.0192	-0.0166

Nodo	Cont.	Spostamento			Rotazione		
Ind.	N.br.	ux	uy	uz	rx	ry	rz
27	SLU 83	0.04486	-0.00695	-0.01071	0.0108	0.0192	-0.0166
27	SLU 84	0.0466	-0.00711	-0.01066	0.011	0.0199	-0.017
27	SLU 85	0.0466	-0.00711	-0.01066	0.011	0.0199	-0.017
27	SLU 86	0.0466	-0.00711	-0.01066	0.0111	0.0199	-0.017
27	SLU 87	0.0466	-0.00711	-0.01066	0.0111	0.0199	-0.017
27	SLU 88	0.04834	-0.00728	-0.01061	0.0113	0.0206	-0.0174
27	SLU 89	0.04834	-0.00728	-0.01061	0.0113	0.0206	-0.0174
27	SLU 90	0.04834	-0.00728	-0.01061	0.0113	0.0206	-0.0174
27	SLU 91	0.04834	-0.00728	-0.01061	0.0113	0.0206	-0.0174
27	SLU 92	0.06548	-0.00838	-0.00804	0.0129	0.0284	-0.0198
27	SLU 93	0.06548	-0.00838	-0.00804	0.0129	0.0284	-0.0198
27	SLU 94	0.06548	-0.00838	-0.00804	0.0129	0.0284	-0.0198
27	SLU 95	0.06548	-0.00838	-0.00804	0.0129	0.0284	-0.0198
27	SLU 96	0.06722	-0.00854	-0.00799	0.0132	0.0291	-0.0202
27	SLU 97	0.06722	-0.00854	-0.00799	0.0132	0.0291	-0.0202
27	SLU 98	0.06722	-0.00854	-0.00799	0.0132	0.0291	-0.0202
27	SLU 99	0.06722	-0.00854	-0.00799	0.0132	0.0291	-0.0202
27	SLU 100	0.03112	-0.006	-0.01249	0.0094	0.0131	-0.0144
27	SLU 101	0.03112	-0.006	-0.01249	0.0094	0.0131	-0.0144
27	SLU 102	0.03112	-0.006	-0.01249	0.0094	0.0131	-0.0145
27	SLU 103	0.03112	-0.006	-0.01249	0.0094	0.0131	-0.0145
27	SLU 104	0.03112	-0.006	-0.01249	0.0094	0.0131	-0.0145
27	SLU 105	0.03286	-0.00617	-0.01244	0.0096	0.0138	-0.0148
27	SLU 106	0.03286	-0.00617	-0.01244	0.0096	0.0138	-0.0149
27	SLU 107	0.03286	-0.00616	-0.01244	0.0096	0.0138	-0.0149
27	SLU 108	0.03286	-0.00616	-0.01244	0.0096	0.0138	-0.0149
27	SLU 109	0.0346	-0.00633	-0.01239	0.0099	0.0145	-0.0152
27	SLU 110	0.0346	-0.00633	-0.01239	0.0099	0.0145	-0.0152
27	SLU 111	0.0346	-0.00633	-0.01239	0.0099	0.0145	-0.0152
27	SLU 112	0.0346	-0.00633	-0.01239	0.0099	0.0145	-0.0152
27	SLU 113	0.04486	-0.00695	-0.01071	0.0108	0.0192	-0.0166
27	SLU 114	0.04486	-0.00695	-0.01071	0.0108	0.0192	-0.0166
27	SLU 115	0.04486	-0.00695	-0.01071	0.0108	0.0192	-0.0166
27	SLU 116	0.04486	-0.00695	-0.01071	0.0108	0.0192	-0.0166
27	SLU 117	0.0466	-0.00711	-0.01066	0.011	0.0199	-0.017
27	SLU 118	0.0466	-0.00711	-0.01066	0.011	0.0199	-0.017
27	SLU 119	0.0466	-0.00711	-0.01066	0.0111	0.0199	-0.017
27	SLU 120	0.0466	-0.00711	-0.01066	0.0111	0.0199	-0.017
27	SLU 121	0.04834	-0.00728	-0.01061	0.0113	0.0206	-0.0174
27	SLU 122	0.04834	-0.00728	-0.01061	0.0113	0.0206	-0.0174
27	SLU 123	0.04834	-0.00728	-0.01061	0.0113	0.0206	-0.0174
27	SLU 124	0.04834	-0.00728	-0.01061	0.0113	0.0206	-0.0174
27	SLU 125	0.06548	-0.00838	-0.00804	0.0129	0.0284	-0.0198
27	SLU 126	0.06548	-0.00838	-0.00804	0.0129	0.0284	-0.0198
27	SLU 127	0.06548	-0.00838	-0.00804	0.0129	0.0284	-0.0198
27	SLU 128	0.06548	-0.00838	-0.00804	0.0129	0.0284	-0.0198
27	SLU 129	0.06722	-0.00854	-0.00799	0.0132	0.0291	-0.0202
27	SLU 130	0.06722	-0.00854	-0.00799	0.0132	0.0291	-0.0202
27	SLU 131	0.06722	-0.00854	-0.00799	0.0132	0.0291	-0.0202
27	SLU 132	0.06722	-0.00854	-0.00799	0.0132	0.0291	-0.0202
27	SLE RA 1	0.02394	-0.00462	-0.0096	0.0072	0.0101	-0.0111
27	SLE RA 2	0.02394	-0.00462	-0.0096	0.0072	0.0101	-0.0111
27	SLE RA 3	0.02394	-0.00462	-0.0096	0.0072	0.0101	-0.0111
27	SLE RA 4	0.02394	-0.00462	-0.0096	0.0072	0.0101	-0.0111
27	SLE RA 5	0.02394	-0.00462	-0.0096	0.0072	0.0101	-0.0111
27	SLE RA 6	0.0251	-0.00473	-0.00957	0.0074	0.0105	-0.0114
27	SLE RA 7	0.0251	-0.00473	-0.00957	0.0074	0.0105	-0.0114
27	SLE RA 8	0.0251	-0.00473	-0.00957	0.0074	0.0105	-0.0114
27	SLE RA 9	0.0251	-0.00473	-0.00957	0.0074	0.0105	-0.0114
27	SLE RA 10	0.02626	-0.00483	-0.00954	0.0075	0.011	-0.0116
27	SLE RA 11	0.02626	-0.00483	-0.00954	0.0075	0.011	-0.0116
27	SLE RA 12	0.02626	-0.00483	-0.00954	0.0075	0.011	-0.0116
27	SLE RA 13	0.02626	-0.00483	-0.00954	0.0075	0.011	-0.0116
27	SLE RA 14	0.0331	-0.00525	-0.00842	0.0082	0.0142	-0.0125
27	SLE RA 15	0.0331	-0.00525	-0.00842	0.0082	0.0142	-0.0125
27	SLE RA 16	0.0331	-0.00525	-0.00842	0.0082	0.0142	-0.0125
27	SLE RA 17	0.0331	-0.00525	-0.00842	0.0082	0.0142	-0.0126
27	SLE RA 18	0.03426	-0.00536	-0.00839	0.0083	0.0146	-0.0128
27	SLE RA 19	0.03426	-0.00536	-0.00839	0.0083	0.0146	-0.0128
27	SLE RA 20	0.03426	-0.00536	-0.00839	0.0083	0.0146	-0.0128
27	SLE RA 21	0.03426	-0.00536	-0.00839	0.0083	0.0146	-0.0128
27	SLE RA 22	0.03542	-0.00547	-0.00836	0.0085	0.0151	-0.013
27	SLE RA 23	0.03542	-0.00547	-0.00836	0.0085	0.0151	-0.0131
27	SLE RA 24	0.03542	-0.00547	-0.00836	0.0085	0.0151	-0.0131
27	SLE RA 25	0.03542	-0.00547	-0.00836	0.0085	0.0151	-0.0131
27	SLE RA 26	0.04684	-0.0062	-0.00664	0.0096	0.0203	-0.0147
27	SLE RA 27	0.04684	-0.0062	-0.00664	0.0096	0.0203	-0.0147
27	SLE RA 28	0.04684	-0.0062	-0.00664	0.0096	0.0203	-0.0147
27	SLE RA 29	0.04684	-0.0062	-0.00664	0.0096	0.0203	-0.0147
27	SLE RA 30	0.048	-0.00631	-0.00661	0.0097	0.0207	-0.0149
27	SLE RA 31	0.048	-0.00631	-0.00661	0.0097	0.0207	-0.0149
27	SLE RA 32	0.048	-0.00631	-0.00661	0.0097	0.0207	-0.0149
27	SLE RA 33	0.048	-0.00631	-0.00661	0.0097	0.0207	-0.0149
27	SLE FR 1	0.02394	-0.00462	-0.0096	0.0072	0.0101	-0.0111
27	SLE FR 2	0.02394	-0.00462	-0.0096	0.0072	0.0101	-0.0111
27	SLE FR 3	0.02394	-0.00462	-0.0096	0.0072	0.0101	-0.0111
27	SLE FR 4	0.0244	-0.00466	-0.00959	0.0073	0.0103	-0.0112
27	SLE FR 5	0.0331	-0.00525	-0.00842	0.0082	0.0142	-0.0125
27	SLE QP 1	0.02394	-0.00462	-0.0096	0.0072	0.0101	-0.0111
27	SLO 1	-0.06783	-0.00485	-0.04872	-0.1024	-0.0391	0.2512
27	SLO 2	-0.06783	-0.00485	-0.04872	-0.1024	-0.0391	0.2512
27	SLO 3	-0.06783	-0.00443	-0.04867	0.1168	-0.0391	-0.2735
27	SLO 4	-0.06783	-0.00443	-0.04867	0.1168	-0.0391	-0.2735
27	SLO 5	-0.00359	-0.00532	-0.02143	-0.3582	-0.0047	0.8635
27	SLO 6	-0.00359	-0.00532	-0.02143	-0.3582	-0.0047	0.8635

Nodo	Cont.	Spostamento			Rotazione		
Ind.	N.br.	ux	uy	uz	rx	ry	rz
27	SLO 7	-0.00359	-0.00393	-0.02123	0.3726	-0.0047	-0.8858
27	SLO 8	-0.00359	-0.00393	-0.02123	0.3726	-0.0047	-0.8858
27	SLO 9	0.05147	-0.0053	0.00203	-0.3582	0.0248	0.8636
27	SLO 10	0.05147	-0.0053	0.00203	-0.3582	0.0248	0.8636
27	SLO 11	0.05147	-0.00392	0.00222	0.3726	0.0248	-0.8857
27	SLO 12	0.05147	-0.00392	0.00222	0.3726	0.0248	-0.8857
27	SLO 13	0.11571	-0.0048	0.02946	-0.1024	0.0593	0.2513
27	SLO 14	0.11571	-0.0048	0.02946	-0.1024	0.0593	0.2513
27	SLO 15	0.11571	-0.00439	0.02952	0.1168	0.0593	-0.2735
27	SLO 16	0.11571	-0.00439	0.02952	0.1168	0.0593	-0.2735
27	SLD 1	-0.05136	-0.00483	-0.04171	-0.0941	-0.0303	0.2313
27	SLD 2	-0.05136	-0.00483	-0.04171	-0.0941	-0.0303	0.2313
27	SLD 3	-0.05136	-0.00444	-0.04165	0.1085	-0.0303	-0.2536
27	SLD 4	-0.05136	-0.00444	-0.04165	0.1085	-0.0303	-0.2536
27	SLD 5	0.00135	-0.00526	-0.01932	-0.3304	-0.002	0.797
27	SLD 6	0.00135	-0.00526	-0.01932	-0.3304	-0.002	0.797
27	SLD 7	0.00135	-0.00398	-0.01914	0.3448	-0.002	-0.8193
27	SLD 8	0.00135	-0.00398	-0.01914	0.3448	-0.002	-0.8193
27	SLD 9	0.04653	-0.00525	-0.00007	-0.3304	0.0222	0.7971
27	SLD 10	0.04653	-0.00525	-0.00007	-0.3304	0.0222	0.7971
27	SLD 11	0.04653	-0.00397	0.00011	0.3448	0.0222	-0.8193
27	SLD 12	0.04653	-0.00397	0.00011	0.3448	0.0222	-0.8193
27	SLD 13	0.09924	-0.00479	0.02244	-0.0941	0.0504	0.2314
27	SLD 14	0.09924	-0.00479	0.02244	-0.0941	0.0504	0.2314
27	SLD 15	0.09924	-0.00441	0.0225	0.1085	0.0504	-0.2535
27	SLD 16	0.09924	-0.00441	0.0225	0.1085	0.0504	-0.2535
27	SLV 1	-0.14428	-0.00517	-0.08133	-0.2599	-0.0801	0.6283
27	SLV 2	-0.14428	-0.00517	-0.08133	-0.2599	-0.0801	0.6283
27	SLV 3	-0.14428	-0.00415	-0.08119	0.2744	-0.0801	-0.6506
27	SLV 4	-0.14428	-0.00415	-0.08119	0.2744	-0.0801	-0.6506
27	SLV 5	-0.02653	-0.00632	-0.03134	-0.8832	-0.0169	2.1204
27	SLV 6	-0.02653	-0.00632	-0.03134	-0.8832	-0.0169	2.1204
27	SLV 7	-0.02653	-0.00294	-0.03086	0.8976	-0.017	-2.1427
27	SLV 8	-0.02653	-0.00294	-0.03086	0.8976	-0.017	-2.1427
27	SLV 9	0.0744	-0.00629	0.01166	-0.8832	0.0371	2.1205
27	SLV 10	0.0744	-0.00629	0.01166	-0.8832	0.0371	2.1205
27	SLV 11	0.0744	-0.00292	0.01213	0.8976	0.0371	-2.1426
27	SLV 12	0.0744	-0.00292	0.01213	0.8976	0.0371	-2.1426
27	SLV 13	0.19215	-0.00508	0.06198	-0.26	0.1002	0.6284
27	SLV 14	0.19215	-0.00508	0.06198	-0.26	0.1002	0.6284
27	SLV 15	0.19215	-0.00407	0.06212	0.2743	0.1002	-0.6505
27	SLV 16	0.19215	-0.00407	0.06212	0.2743	0.1002	-0.6505
28	SLU 1	-0.02402	-0.00314	-0.01072	0.0005	-0.01	0
28	SLU 2	-0.02402	-0.00314	-0.01072	0.0005	-0.01	0
28	SLU 3	-0.02402	-0.00314	-0.01072	0.0005	-0.01	0
28	SLU 4	-0.02402	-0.00314	-0.01072	0.0005	-0.01	0
28	SLU 5	-0.02402	-0.00314	-0.01072	0.0005	-0.01	0
28	SLU 6	-0.02656	-0.00325	-0.01387	0.0006	-0.0111	0.0005
28	SLU 7	-0.02656	-0.00325	-0.01387	0.0006	-0.0111	0.0005
28	SLU 8	-0.02656	-0.00325	-0.01387	0.0006	-0.0111	0.0005
28	SLU 9	-0.02656	-0.00325	-0.01387	0.0006	-0.0111	0.0005
28	SLU 10	-0.0291	-0.00336	-0.01703	0.0006	-0.0121	0.001
28	SLU 11	-0.0291	-0.00336	-0.01703	0.0006	-0.0121	0.001
28	SLU 12	-0.0291	-0.00336	-0.01703	0.0006	-0.0121	0.001
28	SLU 13	-0.0291	-0.00336	-0.01703	0.0006	-0.0121	0.001
28	SLU 14	-0.04452	-0.00379	-0.01315	0.0012	-0.0191	0.004
28	SLU 15	-0.04452	-0.00379	-0.01315	0.0012	-0.0191	0.004
28	SLU 16	-0.04452	-0.00379	-0.01315	0.0012	-0.0191	0.004
28	SLU 17	-0.04452	-0.00379	-0.01315	0.0012	-0.0191	0.004
28	SLU 18	-0.04705	-0.0039	-0.0163	0.0013	-0.0201	0.0044
28	SLU 19	-0.04705	-0.0039	-0.0163	0.0013	-0.0201	0.0044
28	SLU 20	-0.04705	-0.0039	-0.0163	0.0013	-0.0201	0.0044
28	SLU 21	-0.04705	-0.0039	-0.0163	0.0013	-0.0201	0.0044
28	SLU 22	-0.04959	-0.00401	-0.01946	0.0013	-0.0212	0.0049
28	SLU 23	-0.04959	-0.00401	-0.01946	0.0013	-0.0212	0.0049
28	SLU 24	-0.04959	-0.00401	-0.01946	0.0013	-0.0212	0.0049
28	SLU 25	-0.04959	-0.00401	-0.01946	0.0013	-0.0212	0.0049
28	SLU 26	-0.07526	-0.00476	-0.01679	0.0023	-0.0328	0.0098
28	SLU 27	-0.07526	-0.00476	-0.01679	0.0023	-0.0328	0.0098
28	SLU 28	-0.07526	-0.00476	-0.01679	0.0023	-0.0328	0.0098
28	SLU 29	-0.07526	-0.00476	-0.01679	0.0023	-0.0328	0.0098
28	SLU 30	-0.0778	-0.00487	-0.01994	0.0024	-0.0338	0.0103
28	SLU 31	-0.0778	-0.00487	-0.01994	0.0024	-0.0338	0.0103
28	SLU 32	-0.0778	-0.00487	-0.01994	0.0024	-0.0338	0.0103
28	SLU 33	-0.0778	-0.00487	-0.01994	0.0024	-0.0338	0.0103
28	SLU 34	-0.02402	-0.00314	-0.01072	0.0005	-0.01	0
28	SLU 35	-0.02402	-0.00314	-0.01072	0.0005	-0.01	0
28	SLU 36	-0.02402	-0.00314	-0.01072	0.0005	-0.01	0
28	SLU 37	-0.02402	-0.00314	-0.01072	0.0005	-0.01	0
28	SLU 38	-0.02402	-0.00314	-0.01072	0.0005	-0.01	0
28	SLU 39	-0.02656	-0.00325	-0.01387	0.0006	-0.0111	0.0005
28	SLU 40	-0.02656	-0.00325	-0.01387	0.0006	-0.0111	0.0005
28	SLU 41	-0.02656	-0.00325	-0.01387	0.0006	-0.0111	0.0005
28	SLU 42	-0.02656	-0.00325	-0.01387	0.0006	-0.0111	0.0005
28	SLU 43	-0.0291	-0.00336	-0.01703	0.0006	-0.0121	0.001
28	SLU 44	-0.0291	-0.00336	-0.01703	0.0006	-0.0121	0.001
28	SLU 45	-0.0291	-0.00336	-0.01703	0.0006	-0.0121	0.001
28	SLU 46	-0.0291	-0.00336	-0.01703	0.0006	-0.0121	0.001
28	SLU 47	-0.04452	-0.00379	-0.01315	0.0012	-0.0191	0.004
28	SLU 48	-0.04452	-0.00379	-0.01315	0.0012	-0.0191	0.004
28	SLU 49	-0.04452	-0.00379	-0.01315	0.0012	-0.0191	0.004
28	SLU 50	-0.04452	-0.00379	-0.01315	0.0012	-0.0191	0.004
28	SLU 51	-0.04705	-0.0039	-0.0163	0.0013	-0.0201	0.0044
28	SLU 52	-0.04705	-0.0039	-0.0163	0.0013	-0.0201	0.0044
28	SLU 53	-0.04705	-0.0039	-0.0163	0.0013	-0.0201	0.0044

Nodo	Cont.	Spostamento			Rotazione		
Ind.	N.br.	ux	uy	uz	rx	ry	rz
28	SLU 54	-0.04705	-0.0039	-0.0163	0.0013	-0.0201	0.0044
28	SLU 55	-0.04959	-0.00401	-0.01946	0.0013	-0.0212	0.0049
28	SLU 56	-0.04959	-0.00401	-0.01946	0.0013	-0.0212	0.0049
28	SLU 57	-0.04959	-0.00401	-0.01946	0.0013	-0.0212	0.0049
28	SLU 58	-0.04959	-0.00401	-0.01946	0.0013	-0.0212	0.0049
28	SLU 59	-0.07526	-0.00476	-0.01679	0.0023	-0.0328	0.0098
28	SLU 60	-0.07526	-0.00476	-0.01679	0.0023	-0.0328	0.0098
28	SLU 61	-0.07526	-0.00476	-0.01679	0.0023	-0.0328	0.0098
28	SLU 62	-0.07526	-0.00476	-0.01679	0.0023	-0.0328	0.0098
28	SLU 63	-0.0778	-0.00487	-0.01994	0.0024	-0.0338	0.0103
28	SLU 64	-0.0778	-0.00487	-0.01994	0.0024	-0.0338	0.0103
28	SLU 65	-0.0778	-0.00487	-0.01994	0.0024	-0.0338	0.0103
28	SLU 66	-0.0778	-0.00487	-0.01994	0.0024	-0.0338	0.0103
28	SLU 67	-0.03123	-0.00408	-0.01393	0.0007	-0.0131	0.0001
28	SLU 68	-0.03123	-0.00408	-0.01393	0.0007	-0.0131	0.0001
28	SLU 69	-0.03123	-0.00408	-0.01393	0.0007	-0.0131	0.0001
28	SLU 70	-0.03123	-0.00408	-0.01393	0.0007	-0.0131	0.0001
28	SLU 71	-0.03123	-0.00408	-0.01393	0.0007	-0.0131	0.0001
28	SLU 72	-0.03376	-0.00419	-0.01709	0.0007	-0.0141	0.0005
28	SLU 73	-0.03376	-0.00419	-0.01709	0.0007	-0.0141	0.0005
28	SLU 74	-0.03376	-0.00419	-0.01709	0.0007	-0.0141	0.0005
28	SLU 75	-0.03376	-0.00419	-0.01709	0.0007	-0.0141	0.0005
28	SLU 76	-0.0363	-0.0043	-0.02024	0.0008	-0.0151	0.001
28	SLU 77	-0.0363	-0.0043	-0.02024	0.0008	-0.0151	0.001
28	SLU 78	-0.0363	-0.0043	-0.02024	0.0008	-0.0151	0.001
28	SLU 79	-0.0363	-0.0043	-0.02024	0.0008	-0.0151	0.001
28	SLU 80	-0.05172	-0.00473	-0.01636	0.0014	-0.0222	0.004
28	SLU 81	-0.05172	-0.00473	-0.01636	0.0014	-0.0222	0.004
28	SLU 82	-0.05172	-0.00473	-0.01636	0.0014	-0.0222	0.004
28	SLU 83	-0.05172	-0.00473	-0.01636	0.0014	-0.0222	0.004
28	SLU 84	-0.05426	-0.00484	-0.01952	0.0014	-0.0232	0.0044
28	SLU 85	-0.05426	-0.00484	-0.01952	0.0014	-0.0232	0.0044
28	SLU 86	-0.05426	-0.00484	-0.01952	0.0014	-0.0232	0.0044
28	SLU 87	-0.05426	-0.00484	-0.01952	0.0014	-0.0232	0.0044
28	SLU 88	-0.0568	-0.00495	-0.02267	0.0015	-0.0242	0.0049
28	SLU 89	-0.0568	-0.00495	-0.02267	0.0015	-0.0242	0.0049
28	SLU 90	-0.0568	-0.00495	-0.02267	0.0015	-0.0242	0.0049
28	SLU 91	-0.0568	-0.00495	-0.02267	0.0015	-0.0242	0.0049
28	SLU 92	-0.08247	-0.0057	-0.02	0.0025	-0.0358	0.0098
28	SLU 93	-0.08247	-0.0057	-0.02	0.0025	-0.0358	0.0098
28	SLU 94	-0.08247	-0.0057	-0.02	0.0025	-0.0358	0.0098
28	SLU 95	-0.08247	-0.0057	-0.02	0.0025	-0.0358	0.0098
28	SLU 96	-0.085	-0.00581	-0.02316	0.0025	-0.0368	0.0103
28	SLU 97	-0.085	-0.00581	-0.02316	0.0025	-0.0368	0.0103
28	SLU 98	-0.085	-0.00581	-0.02316	0.0025	-0.0368	0.0103
28	SLU 99	-0.085	-0.00581	-0.02316	0.0025	-0.0368	0.0103
28	SLU 100	-0.03123	-0.00408	-0.01393	0.0007	-0.0131	0.0001
28	SLU 101	-0.03123	-0.00408	-0.01393	0.0007	-0.0131	0.0001
28	SLU 102	-0.03123	-0.00408	-0.01393	0.0007	-0.0131	0.0001
28	SLU 103	-0.03123	-0.00408	-0.01393	0.0007	-0.0131	0.0001
28	SLU 104	-0.03123	-0.00408	-0.01393	0.0007	-0.0131	0.0001
28	SLU 105	-0.03376	-0.00419	-0.01709	0.0007	-0.0141	0.0005
28	SLU 106	-0.03376	-0.00419	-0.01709	0.0007	-0.0141	0.0005
28	SLU 107	-0.03376	-0.00419	-0.01709	0.0007	-0.0141	0.0005
28	SLU 108	-0.03376	-0.00419	-0.01709	0.0007	-0.0141	0.0005
28	SLU 109	-0.0363	-0.0043	-0.02024	0.0008	-0.0151	0.001
28	SLU 110	-0.0363	-0.0043	-0.02024	0.0008	-0.0151	0.001
28	SLU 111	-0.0363	-0.0043	-0.02024	0.0008	-0.0151	0.001
28	SLU 112	-0.0363	-0.0043	-0.02024	0.0008	-0.0151	0.001
28	SLU 113	-0.05172	-0.00473	-0.01636	0.0014	-0.0222	0.004
28	SLU 114	-0.05172	-0.00473	-0.01636	0.0014	-0.0222	0.004
28	SLU 115	-0.05172	-0.00473	-0.01636	0.0014	-0.0222	0.004
28	SLU 116	-0.05172	-0.00473	-0.01636	0.0014	-0.0222	0.004
28	SLU 117	-0.05426	-0.00484	-0.01952	0.0014	-0.0232	0.0044
28	SLU 118	-0.05426	-0.00484	-0.01952	0.0014	-0.0232	0.0044
28	SLU 119	-0.05426	-0.00484	-0.01952	0.0014	-0.0232	0.0044
28	SLU 120	-0.05426	-0.00484	-0.01952	0.0014	-0.0232	0.0044
28	SLU 121	-0.0568	-0.00495	-0.02267	0.0015	-0.0242	0.0049
28	SLU 122	-0.0568	-0.00495	-0.02267	0.0015	-0.0242	0.0049
28	SLU 123	-0.0568	-0.00495	-0.02267	0.0015	-0.0242	0.0049
28	SLU 124	-0.0568	-0.00495	-0.02267	0.0015	-0.0242	0.0049
28	SLU 125	-0.08247	-0.0057	-0.02	0.0025	-0.0358	0.0098
28	SLU 126	-0.08247	-0.0057	-0.02	0.0025	-0.0358	0.0098
28	SLU 127	-0.08247	-0.0057	-0.02	0.0025	-0.0358	0.0098
28	SLU 128	-0.08247	-0.0057	-0.02	0.0025	-0.0358	0.0098
28	SLU 129	-0.085	-0.00581	-0.02316	0.0025	-0.0368	0.0103
28	SLU 130	-0.085	-0.00581	-0.02316	0.0025	-0.0368	0.0103
28	SLU 131	-0.085	-0.00581	-0.02316	0.0025	-0.0368	0.0103
28	SLU 132	-0.085	-0.00581	-0.02316	0.0025	-0.0368	0.0103
28	SLE RA 1	-0.02402	-0.00314	-0.01072	0.0005	-0.01	0
28	SLE RA 2	-0.02402	-0.00314	-0.01072	0.0005	-0.01	0
28	SLE RA 3	-0.02402	-0.00314	-0.01072	0.0005	-0.01	0
28	SLE RA 4	-0.02402	-0.00314	-0.01072	0.0005	-0.01	0
28	SLE RA 5	-0.02402	-0.00314	-0.01072	0.0005	-0.01	0
28	SLE RA 6	-0.02571	-0.00322	-0.01282	0.0006	-0.0107	0.0004
28	SLE RA 7	-0.02571	-0.00322	-0.01282	0.0006	-0.0107	0.0004
28	SLE RA 8	-0.02571	-0.00322	-0.01282	0.0006	-0.0107	0.0004
28	SLE RA 9	-0.02571	-0.00322	-0.01282	0.0006	-0.0107	0.0004
28	SLE RA 10	-0.0274	-0.00329	-0.01493	0.0006	-0.0114	0.0007
28	SLE RA 11	-0.0274	-0.00329	-0.01493	0.0006	-0.0114	0.0007
28	SLE RA 12	-0.0274	-0.00329	-0.01493	0.0006	-0.0114	0.0007
28	SLE RA 13	-0.0274	-0.00329	-0.01493	0.0006	-0.0114	0.0007
28	SLE RA 14	-0.03768	-0.00357	-0.01234	0.001	-0.0161	0.0027
28	SLE RA 15	-0.03768	-0.00357	-0.01234	0.001	-0.0161	0.0027
28	SLE RA 16	-0.03768	-0.00357	-0.01234	0.001	-0.0161	0.0027

Nodo	Cont.	Spostamento			Rotazione		
Ind.	N.br.	ux	uy	uz	rx	ry	rz
28	SLE RA 17	-0.03768	-0.00357	-0.01234	0.001	-0.0161	0.0027
28	SLE RA 18	-0.03938	-0.00365	-0.01444	0.001	-0.0168	0.003
28	SLE RA 19	-0.03938	-0.00365	-0.01444	0.001	-0.0168	0.003
28	SLE RA 20	-0.03938	-0.00365	-0.01444	0.001	-0.0168	0.003
28	SLE RA 21	-0.03938	-0.00365	-0.01444	0.001	-0.0168	0.003
28	SLE RA 22	-0.04107	-0.00372	-0.01654	0.0011	-0.0174	0.0033
28	SLE RA 23	-0.04107	-0.00372	-0.01654	0.0011	-0.0174	0.0033
28	SLE RA 24	-0.04107	-0.00372	-0.01654	0.0011	-0.0174	0.0033
28	SLE RA 25	-0.04107	-0.00372	-0.01654	0.0011	-0.0174	0.0033
28	SLE RA 26	-0.05818	-0.00422	-0.01476	0.0017	-0.0252	0.0066
28	SLE RA 27	-0.05818	-0.00422	-0.01476	0.0017	-0.0252	0.0066
28	SLE RA 28	-0.05818	-0.00422	-0.01476	0.0017	-0.0252	0.0066
28	SLE RA 29	-0.05818	-0.00422	-0.01476	0.0017	-0.0252	0.0066
28	SLE RA 30	-0.05987	-0.00429	-0.01687	0.0018	-0.0259	0.0069
28	SLE RA 31	-0.05987	-0.00429	-0.01687	0.0018	-0.0259	0.0069
28	SLE RA 32	-0.05987	-0.00429	-0.01687	0.0018	-0.0259	0.0069
28	SLE RA 33	-0.05987	-0.00429	-0.01687	0.0018	-0.0259	0.0069
28	SLE FR 1	-0.02402	-0.00314	-0.01072	0.0005	-0.01	0
28	SLE FR 2	-0.02402	-0.00314	-0.01072	0.0005	-0.01	0
28	SLE FR 3	-0.02402	-0.00314	-0.01072	0.0005	-0.01	0
28	SLE FR 4	-0.0247	-0.00317	-0.01156	0.0005	-0.0103	0.0002
28	SLE FR 5	-0.03768	-0.00357	-0.01234	0.001	-0.0161	0.0027
28	SLE QP 1	-0.02402	-0.00314	-0.01072	0.0005	-0.01	0
28	SLO 1	-0.11695	-0.00331	0.02871	0.0008	-0.0597	0.0006
28	SLO 2	-0.11695	-0.00331	0.02871	0.0008	-0.0597	0.0006
28	SLO 3	-0.11695	-0.00294	0.02874	0.0007	-0.0597	0.0006
28	SLO 4	-0.11695	-0.00294	0.02874	0.0007	-0.0597	0.0006
28	SLO 5	-0.0519	-0.00377	0.00107	0.0006	-0.0249	0.0002
28	SLO 6	-0.0519	-0.00377	0.00107	0.0006	-0.0249	0.0002
28	SLO 7	-0.0519	-0.00251	0.00116	0.0006	-0.0249	0.0002
28	SLO 8	-0.0519	-0.00251	0.00116	0.0006	-0.0249	0.0002
28	SLO 9	0.00386	-0.00378	-0.0226	0.0005	0.0048	-0.0001
28	SLO 10	0.00386	-0.00378	-0.0226	0.0005	0.0048	-0.0001
28	SLO 11	0.00386	-0.00252	-0.0225	0.0004	0.0048	-0.0001
28	SLO 12	0.00386	-0.00252	-0.0225	0.0004	0.0048	-0.0001
28	SLO 13	0.06891	-0.00335	-0.05018	0.0003	0.0396	-0.0005
28	SLO 14	0.06891	-0.00335	-0.05018	0.0003	0.0396	-0.0005
28	SLO 15	0.06891	-0.00297	-0.05015	0.0003	0.0396	-0.0005
28	SLO 16	0.06891	-0.00297	-0.05015	0.0003	0.0396	-0.0005
28	SLD 1	-0.10027	-0.0033	0.02163	0.0007	-0.0508	0.0005
28	SLD 2	-0.10027	-0.0033	0.02163	0.0007	-0.0508	0.0005
28	SLD 3	-0.10027	-0.00295	0.02166	0.0007	-0.0508	0.0005
28	SLD 4	-0.10027	-0.00295	0.02166	0.0007	-0.0508	0.0005
28	SLD 5	-0.04689	-0.00372	-0.00105	0.0006	-0.0223	0.0002
28	SLD 6	-0.04689	-0.00372	-0.00105	0.0006	-0.0223	0.0002
28	SLD 7	-0.04689	-0.00256	-0.00096	0.0006	-0.0223	0.0002
28	SLD 8	-0.04689	-0.00256	-0.00096	0.0006	-0.0223	0.0002
28	SLD 9	-0.00115	-0.00373	-0.02047	0.0005	0.0022	-0.0001
28	SLD 10	-0.00115	-0.00373	-0.02047	0.0005	0.0022	-0.0001
28	SLD 11	-0.00115	-0.00256	-0.02038	0.0004	0.0022	-0.0001
28	SLD 12	-0.00115	-0.00256	-0.02038	0.0004	0.0022	-0.0001
28	SLD 13	0.05223	-0.00333	-0.0431	0.0003	0.0307	-0.0004
28	SLD 14	0.05223	-0.00333	-0.0431	0.0003	0.0307	-0.0004
28	SLD 15	0.05223	-0.00298	-0.04307	0.0003	0.0307	-0.0004
28	SLD 16	0.05223	-0.00298	-0.04307	0.0003	0.0307	-0.0004
28	SLV 1	-0.19436	-0.00357	0.06155	0.001	-0.101	0.001
28	SLV 2	-0.19436	-0.00357	0.06155	0.001	-0.101	0.001
28	SLV 3	-0.19436	-0.00265	0.06162	0.0009	-0.101	0.001
28	SLV 4	-0.19436	-0.00265	0.06162	0.0009	-0.101	0.001
28	SLV 5	-0.07512	-0.00467	0.01085	0.0007	-0.0374	0.0003
28	SLV 6	-0.07512	-0.00467	0.01085	0.0007	-0.0374	0.0003
28	SLV 7	-0.07512	-0.0016	0.01109	0.0006	-0.0373	0.0003
28	SLV 8	-0.07512	-0.0016	0.01109	0.0006	-0.0373	0.0003
28	SLV 9	0.02708	-0.00468	-0.03253	0.0005	0.0172	-0.0002
28	SLV 10	0.02708	-0.00468	-0.03253	0.0005	0.0172	-0.0002
28	SLV 11	0.02708	-0.00162	-0.03229	0.0003	0.0173	-0.0002
28	SLV 12	0.02708	-0.00162	-0.03229	0.0003	0.0173	-0.0002
28	SLV 13	0.14632	-0.00363	-0.08306	0.0001	0.0809	-0.0009
28	SLV 14	0.14632	-0.00363	-0.08306	0.0001	0.0809	-0.0009
28	SLV 15	0.14632	-0.00271	-0.08299	0.0001	0.0809	-0.0009
28	SLV 16	0.14632	-0.00271	-0.08299	0.0001	0.0809	-0.0009
29	SLU 1	-0.0241	-0.00167	-0.00778	0.0026	-0.01	0.004
29	SLU 2	-0.0241	-0.00167	-0.00778	0.0026	-0.01	0.004
29	SLU 3	-0.0241	-0.00167	-0.00778	0.0026	-0.01	0.004
29	SLU 4	-0.0241	-0.00167	-0.00778	0.0026	-0.01	0.004
29	SLU 5	-0.0241	-0.00167	-0.00778	0.0026	-0.01	0.004
29	SLU 6	-0.02748	-0.00172	-0.0076	0.0027	-0.0114	0.0041
29	SLU 7	-0.02748	-0.00172	-0.0076	0.0027	-0.0114	0.0041
29	SLU 8	-0.02748	-0.00172	-0.0076	0.0027	-0.0114	0.0041
29	SLU 9	-0.02748	-0.00172	-0.0076	0.0027	-0.0114	0.0041
29	SLU 10	-0.03085	-0.00178	-0.00742	0.0028	-0.0127	0.0042
29	SLU 11	-0.03085	-0.00178	-0.00742	0.0028	-0.0127	0.0042
29	SLU 12	-0.03085	-0.00178	-0.00742	0.0028	-0.0127	0.0043
29	SLU 13	-0.03085	-0.00178	-0.00742	0.0028	-0.0127	0.0043
29	SLU 14	-0.05142	-0.00201	-0.00352	0.0031	-0.0221	0.0046
29	SLU 15	-0.05142	-0.00201	-0.00352	0.0031	-0.0221	0.0046
29	SLU 16	-0.05142	-0.00201	-0.00352	0.0031	-0.0221	0.0046
29	SLU 17	-0.05142	-0.00201	-0.00352	0.0031	-0.0221	0.0046
29	SLU 18	-0.05479	-0.00207	-0.00334	0.0031	-0.0235	0.0048
29	SLU 19	-0.05479	-0.00207	-0.00334	0.0032	-0.0235	0.0048
29	SLU 20	-0.05479	-0.00207	-0.00334	0.0032	-0.0235	0.0048
29	SLU 21	-0.05479	-0.00207	-0.00334	0.0032	-0.0235	0.0048
29	SLU 22	-0.05817	-0.00213	-0.00316	0.0032	-0.0248	0.0049
29	SLU 23	-0.05817	-0.00213	-0.00316	0.0032	-0.0248	0.0049
29	SLU 24	-0.05817	-0.00213	-0.00316	0.0032	-0.0248	0.0049

Nodo	Cont.	Spostamento			Rotazione		
Ind.	N.br.	ux	uy	uz	rx	ry	rz
29	SLU 25	-0.05817	-0.00213	-0.00316	0.0032	-0.0248	0.0049
29	SLU 26	-0.09239	-0.00252	0.00288	0.0037	-0.0403	0.0056
29	SLU 27	-0.09239	-0.00252	0.00288	0.0038	-0.0403	0.0056
29	SLU 28	-0.09239	-0.00252	0.00288	0.0038	-0.0403	0.0056
29	SLU 29	-0.09239	-0.00252	0.00288	0.0038	-0.0403	0.0056
29	SLU 30	-0.09576	-0.00258	0.00306	0.0038	-0.0416	0.0057
29	SLU 31	-0.09576	-0.00258	0.00306	0.0038	-0.0416	0.0057
29	SLU 32	-0.09576	-0.00258	0.00306	0.0038	-0.0416	0.0057
29	SLU 33	-0.09576	-0.00258	0.00306	0.0038	-0.0416	0.0057
29	SLU 34	-0.0241	-0.00167	-0.00778	0.0026	-0.01	0.004
29	SLU 35	-0.0241	-0.00167	-0.00778	0.0026	-0.01	0.004
29	SLU 36	-0.0241	-0.00167	-0.00778	0.0026	-0.01	0.004
29	SLU 37	-0.0241	-0.00167	-0.00778	0.0026	-0.01	0.004
29	SLU 38	-0.0241	-0.00167	-0.00778	0.0026	-0.01	0.004
29	SLU 39	-0.02748	-0.00172	-0.0076	0.0027	-0.0114	0.0041
29	SLU 40	-0.02748	-0.00172	-0.0076	0.0027	-0.0114	0.0041
29	SLU 41	-0.02748	-0.00172	-0.0076	0.0027	-0.0114	0.0041
29	SLU 42	-0.02748	-0.00172	-0.0076	0.0027	-0.0114	0.0041
29	SLU 43	-0.03085	-0.00178	-0.00742	0.0028	-0.0127	0.0042
29	SLU 44	-0.03085	-0.00178	-0.00742	0.0028	-0.0127	0.0042
29	SLU 45	-0.03085	-0.00178	-0.00742	0.0028	-0.0127	0.0043
29	SLU 46	-0.03085	-0.00178	-0.00742	0.0028	-0.0127	0.0043
29	SLU 47	-0.05142	-0.00201	-0.00352	0.0031	-0.0221	0.0046
29	SLU 48	-0.05142	-0.00201	-0.00352	0.0031	-0.0221	0.0046
29	SLU 49	-0.05142	-0.00201	-0.00352	0.0031	-0.0221	0.0046
29	SLU 50	-0.05142	-0.00201	-0.00352	0.0031	-0.0221	0.0046
29	SLU 51	-0.05479	-0.00207	-0.00334	0.0031	-0.0235	0.0048
29	SLU 52	-0.05479	-0.00207	-0.00334	0.0032	-0.0235	0.0048
29	SLU 53	-0.05479	-0.00207	-0.00334	0.0032	-0.0235	0.0048
29	SLU 54	-0.05479	-0.00207	-0.00334	0.0032	-0.0235	0.0048
29	SLU 55	-0.05817	-0.00213	-0.00316	0.0032	-0.0248	0.0049
29	SLU 56	-0.05817	-0.00213	-0.00316	0.0032	-0.0248	0.0049
29	SLU 57	-0.05817	-0.00213	-0.00316	0.0032	-0.0248	0.0049
29	SLU 58	-0.05817	-0.00213	-0.00316	0.0032	-0.0248	0.0049
29	SLU 59	-0.09239	-0.00252	0.00288	0.0037	-0.0403	0.0056
29	SLU 60	-0.09239	-0.00252	0.00288	0.0038	-0.0403	0.0056
29	SLU 61	-0.09239	-0.00252	0.00288	0.0038	-0.0403	0.0056
29	SLU 62	-0.09239	-0.00252	0.00288	0.0038	-0.0403	0.0056
29	SLU 63	-0.09576	-0.00258	0.00306	0.0038	-0.0416	0.0057
29	SLU 64	-0.09576	-0.00258	0.00306	0.0038	-0.0416	0.0057
29	SLU 65	-0.09576	-0.00258	0.00306	0.0038	-0.0416	0.0057
29	SLU 66	-0.09576	-0.00258	0.00306	0.0038	-0.0416	0.0057
29	SLU 67	-0.03133	-0.00217	-0.01012	0.0034	-0.013	0.0051
29	SLU 68	-0.03133	-0.00217	-0.01012	0.0034	-0.013	0.0052
29	SLU 69	-0.03133	-0.00217	-0.01012	0.0034	-0.013	0.0052
29	SLU 70	-0.03133	-0.00217	-0.01012	0.0034	-0.013	0.0052
29	SLU 71	-0.03133	-0.00217	-0.01012	0.0034	-0.013	0.0052
29	SLU 72	-0.03471	-0.00222	-0.00994	0.0035	-0.0144	0.0053
29	SLU 73	-0.03471	-0.00222	-0.00994	0.0035	-0.0144	0.0053
29	SLU 74	-0.03471	-0.00222	-0.00994	0.0035	-0.0144	0.0053
29	SLU 75	-0.03471	-0.00222	-0.00994	0.0035	-0.0144	0.0053
29	SLU 76	-0.03808	-0.00228	-0.00976	0.0036	-0.0157	0.0054
29	SLU 77	-0.03808	-0.00228	-0.00976	0.0036	-0.0157	0.0054
29	SLU 78	-0.03808	-0.00228	-0.00976	0.0036	-0.0157	0.0054
29	SLU 79	-0.03808	-0.00228	-0.00976	0.0036	-0.0157	0.0054
29	SLU 80	-0.05865	-0.00251	-0.00585	0.0038	-0.0251	0.0058
29	SLU 81	-0.05865	-0.00251	-0.00585	0.0038	-0.0251	0.0058
29	SLU 82	-0.05865	-0.00251	-0.00585	0.0038	-0.0251	0.0058
29	SLU 83	-0.05865	-0.00251	-0.00585	0.0038	-0.0251	0.0058
29	SLU 84	-0.06202	-0.00257	-0.00567	0.0039	-0.0265	0.0059
29	SLU 85	-0.06202	-0.00257	-0.00567	0.0039	-0.0265	0.006
29	SLU 86	-0.06202	-0.00257	-0.00567	0.0039	-0.0265	0.006
29	SLU 87	-0.06202	-0.00257	-0.00567	0.0039	-0.0265	0.006
29	SLU 88	-0.0654	-0.00262	-0.00549	0.004	-0.0278	0.0061
29	SLU 89	-0.0654	-0.00263	-0.00549	0.004	-0.0278	0.0061
29	SLU 90	-0.0654	-0.00262	-0.00549	0.004	-0.0278	0.0061
29	SLU 91	-0.0654	-0.00263	-0.00549	0.004	-0.0278	0.0061
29	SLU 92	-0.09962	-0.00302	0.00055	0.0045	-0.0433	0.0068
29	SLU 93	-0.09962	-0.00302	0.00055	0.0045	-0.0433	0.0068
29	SLU 94	-0.09962	-0.00302	0.00055	0.0045	-0.0433	0.0068
29	SLU 95	-0.09962	-0.00302	0.00055	0.0045	-0.0433	0.0068
29	SLU 96	-0.103	-0.00308	0.00073	0.0046	-0.0446	0.0069
29	SLU 97	-0.103	-0.00308	0.00073	0.0046	-0.0446	0.0069
29	SLU 98	-0.103	-0.00308	0.00073	0.0046	-0.0446	0.0069
29	SLU 99	-0.103	-0.00308	0.00073	0.0046	-0.0446	0.0069
29	SLU 100	-0.03133	-0.00217	-0.01012	0.0034	-0.013	0.0051
29	SLU 101	-0.03133	-0.00217	-0.01012	0.0034	-0.013	0.0052
29	SLU 102	-0.03133	-0.00217	-0.01012	0.0034	-0.013	0.0052
29	SLU 103	-0.03133	-0.00217	-0.01012	0.0034	-0.013	0.0052
29	SLU 104	-0.03133	-0.00217	-0.01012	0.0034	-0.013	0.0052
29	SLU 105	-0.03471	-0.00222	-0.00994	0.0035	-0.0144	0.0053
29	SLU 106	-0.03471	-0.00222	-0.00994	0.0035	-0.0144	0.0053
29	SLU 107	-0.03471	-0.00222	-0.00994	0.0035	-0.0144	0.0053
29	SLU 108	-0.03471	-0.00222	-0.00994	0.0035	-0.0144	0.0053
29	SLU 109	-0.03808	-0.00228	-0.00976	0.0036	-0.0157	0.0054
29	SLU 110	-0.03808	-0.00228	-0.00976	0.0036	-0.0157	0.0054
29	SLU 111	-0.03808	-0.00228	-0.00976	0.0036	-0.0157	0.0054
29	SLU 112	-0.03808	-0.00228	-0.00976	0.0036	-0.0157	0.0054
29	SLU 113	-0.05865	-0.00251	-0.00585	0.0038	-0.0251	0.0058
29	SLU 114	-0.05865	-0.00251	-0.00585	0.0038	-0.0251	0.0058
29	SLU 115	-0.05865	-0.00251	-0.00585	0.0038	-0.0251	0.0058
29	SLU 116	-0.05865	-0.00251	-0.00585	0.0038	-0.0251	0.0058
29	SLU 117	-0.06202	-0.00257	-0.00567	0.0039	-0.0265	0.0059
29	SLU 118	-0.06202	-0.00257	-0.00567	0.0039	-0.0265	0.006
29	SLU 119	-0.06202	-0.00257	-0.00567	0.0039	-0.0265	0.006

Nodo	Cont.	Spostamento			Rotazione		
Ind.	N.br.	ux	uy	uz	rx	ry	rz
29	SLU 120	-0.06202	-0.00257	-0.00567	0.0039	-0.0265	0.006
29	SLU 121	-0.0654	-0.00262	-0.00549	0.004	-0.0278	0.0061
29	SLU 122	-0.0654	-0.00263	-0.00549	0.004	-0.0278	0.0061
29	SLU 123	-0.0654	-0.00262	-0.00549	0.004	-0.0278	0.0061
29	SLU 124	-0.0654	-0.00263	-0.00549	0.004	-0.0278	0.0061
29	SLU 125	-0.09962	-0.00302	0.00055	0.0045	-0.0433	0.0068
29	SLU 126	-0.09962	-0.00302	0.00055	0.0045	-0.0433	0.0068
29	SLU 127	-0.09962	-0.00302	0.00055	0.0045	-0.0433	0.0068
29	SLU 128	-0.09962	-0.00302	0.00055	0.0045	-0.0433	0.0068
29	SLU 129	-0.103	-0.00308	0.00073	0.0046	-0.0446	0.0069
29	SLU 130	-0.103	-0.00308	0.00073	0.0046	-0.0446	0.0069
29	SLU 131	-0.103	-0.00308	0.00073	0.0046	-0.0446	0.0069
29	SLU 132	-0.103	-0.00308	0.00073	0.0046	-0.0446	0.0069
29	SLE RA 1	-0.0241	-0.00167	-0.00778	0.0026	-0.01	0.004
29	SLE RA 2	-0.0241	-0.00167	-0.00778	0.0026	-0.01	0.004
29	SLE RA 3	-0.0241	-0.00167	-0.00778	0.0026	-0.01	0.004
29	SLE RA 4	-0.0241	-0.00167	-0.00778	0.0026	-0.01	0.004
29	SLE RA 5	-0.0241	-0.00167	-0.00778	0.0026	-0.01	0.004
29	SLE RA 6	-0.02635	-0.0017	-0.00766	0.0027	-0.0109	0.0041
29	SLE RA 7	-0.02635	-0.0017	-0.00766	0.0027	-0.0109	0.0041
29	SLE RA 8	-0.02635	-0.0017	-0.00766	0.0027	-0.0109	0.0041
29	SLE RA 9	-0.02635	-0.0017	-0.00766	0.0027	-0.0109	0.0041
29	SLE RA 10	-0.0286	-0.00174	-0.00754	0.0027	-0.0118	0.0041
29	SLE RA 11	-0.0286	-0.00174	-0.00754	0.0027	-0.0118	0.0041
29	SLE RA 12	-0.0286	-0.00174	-0.00754	0.0027	-0.0118	0.0042
29	SLE RA 13	-0.0286	-0.00174	-0.00754	0.0027	-0.0118	0.0042
29	SLE RA 14	-0.04231	-0.00189	-0.00494	0.0029	-0.0181	0.0044
29	SLE RA 15	-0.04231	-0.00189	-0.00494	0.0029	-0.0181	0.0044
29	SLE RA 16	-0.04231	-0.00189	-0.00494	0.0029	-0.0181	0.0044
29	SLE RA 17	-0.04231	-0.00189	-0.00494	0.0029	-0.0181	0.0044
29	SLE RA 18	-0.04456	-0.00193	-0.00482	0.003	-0.019	0.0045
29	SLE RA 19	-0.04456	-0.00193	-0.00482	0.003	-0.019	0.0045
29	SLE RA 20	-0.04456	-0.00193	-0.00482	0.003	-0.019	0.0045
29	SLE RA 21	-0.04456	-0.00193	-0.00482	0.003	-0.019	0.0045
29	SLE RA 22	-0.04681	-0.00197	-0.0047	0.003	-0.0199	0.0046
29	SLE RA 23	-0.04681	-0.00197	-0.0047	0.003	-0.0199	0.0046
29	SLE RA 24	-0.04681	-0.00197	-0.0047	0.003	-0.0199	0.0046
29	SLE RA 25	-0.04681	-0.00197	-0.0047	0.003	-0.0199	0.0046
29	SLE RA 26	-0.06963	-0.00224	-0.00067	0.0034	-0.0302	0.005
29	SLE RA 27	-0.06963	-0.00224	-0.00067	0.0034	-0.0302	0.005
29	SLE RA 28	-0.06963	-0.00224	-0.00067	0.0034	-0.0302	0.005
29	SLE RA 29	-0.06963	-0.00224	-0.00067	0.0034	-0.0302	0.005
29	SLE RA 30	-0.07188	-0.00228	-0.00055	0.0034	-0.0311	0.0051
29	SLE RA 31	-0.07188	-0.00228	-0.00055	0.0034	-0.0311	0.0051
29	SLE RA 32	-0.07188	-0.00228	-0.00055	0.0034	-0.0311	0.0051
29	SLE RA 33	-0.07188	-0.00228	-0.00055	0.0034	-0.0311	0.0051
29	SLE FR 1	-0.0241	-0.00167	-0.00778	0.0026	-0.01	0.004
29	SLE FR 2	-0.0241	-0.00167	-0.00778	0.0026	-0.01	0.004
29	SLE FR 3	-0.0241	-0.00167	-0.00778	0.0026	-0.01	0.004
29	SLE FR 4	-0.025	-0.00168	-0.00773	0.0026	-0.0104	0.004
29	SLE FR 5	-0.04231	-0.00189	-0.00494	0.0029	-0.0181	0.0044
29	SLE QP 1	-0.0241	-0.00167	-0.00778	0.0026	-0.01	0.004
29	SLO 1	-0.11755	-0.00183	0.03202	-0.1071	-0.0601	-0.2585
29	SLO 2	-0.11755	-0.00183	0.03202	-0.1071	-0.0601	-0.2585
29	SLO 3	-0.11755	-0.00149	0.03202	0.1122	-0.0601	0.2664
29	SLO 4	-0.11755	-0.00149	0.03202	0.1122	-0.0601	0.2664
29	SLO 5	-0.05214	-0.00223	0.00416	-0.3629	-0.025	-0.871
29	SLO 6	-0.05214	-0.00223	0.00416	-0.3629	-0.025	-0.871
29	SLO 7	-0.05214	-0.0011	0.00416	0.3681	-0.025	0.8789
29	SLO 8	-0.05214	-0.0011	0.00416	0.3681	-0.025	0.8789
29	SLO 9	0.00393	-0.00223	-0.01972	-0.3629	0.005	-0.8709
29	SLO 10	0.00393	-0.00223	-0.01972	-0.3629	0.005	-0.8709
29	SLO 11	0.00393	-0.0011	-0.01972	0.3681	0.005	0.8789
29	SLO 12	0.00393	-0.0011	-0.01972	0.3681	0.005	0.8789
29	SLO 13	0.06935	-0.00184	-0.04758	-0.1071	0.0401	-0.2585
29	SLO 14	0.06935	-0.00184	-0.04758	-0.1071	0.0401	-0.2585
29	SLO 15	0.06935	-0.0015	-0.04758	0.1123	0.0401	0.2664
29	SLO 16	0.06935	-0.0015	-0.04758	0.1123	0.0401	0.2664
29	SLD 1	-0.10078	-0.00182	0.02487	-0.0987	-0.0511	-0.2386
29	SLD 2	-0.10078	-0.00182	0.02487	-0.0987	-0.0511	-0.2386
29	SLD 3	-0.10078	-0.0015	0.02487	0.1039	-0.0511	0.2465
29	SLD 4	-0.10078	-0.0015	0.02487	0.1039	-0.0511	0.2465
29	SLD 5	-0.04711	-0.00218	0.00201	-0.3352	-0.0223	-0.8044
29	SLD 6	-0.04711	-0.00218	0.00201	-0.3352	-0.0223	-0.8044
29	SLD 7	-0.04711	-0.00114	0.00201	0.3403	-0.0223	0.8124
29	SLD 8	-0.04711	-0.00114	0.00201	0.3403	-0.0223	0.8124
29	SLD 9	-0.0011	-0.00219	-0.01758	-0.3352	0.0023	-0.8044
29	SLD 10	-0.0011	-0.00219	-0.01758	-0.3352	0.0023	-0.8044
29	SLD 11	-0.0011	-0.00115	-0.01758	0.3403	0.0023	0.8124
29	SLD 12	-0.0011	-0.00115	-0.01758	0.3403	0.0023	0.8124
29	SLD 13	0.05258	-0.00183	-0.04044	-0.0987	0.0311	-0.2386
29	SLD 14	0.05258	-0.00183	-0.04044	-0.0987	0.0311	-0.2386
29	SLD 15	0.05258	-0.00152	-0.04044	0.1039	0.0311	0.2465
29	SLD 16	0.05258	-0.00152	-0.04044	0.1039	0.0311	0.2465
29	SLV 1	-0.19541	-0.00206	0.06517	-0.2647	-0.1018	-0.6357
29	SLV 2	-0.19541	-0.00206	0.06517	-0.2647	-0.1018	-0.6357
29	SLV 3	-0.19541	-0.00124	0.06517	0.2698	-0.1018	0.6436
29	SLV 4	-0.19541	-0.00124	0.06517	0.2698	-0.1018	0.6436
29	SLV 5	-0.07549	-0.00304	0.0141	-0.8882	-0.0376	-2.1282
29	SLV 6	-0.07549	-0.00304	0.0141	-0.8882	-0.0376	-2.1282
29	SLV 7	-0.07549	-0.00029	0.0141	0.8934	-0.0376	2.1361
29	SLV 8	-0.07549	-0.00029	0.0141	0.8934	-0.0376	2.1361
29	SLV 9	0.02729	-0.00304	-0.02967	-0.8882	0.0175	-2.1282
29	SLV 10	0.02729	-0.00304	-0.02967	-0.8882	0.0175	-2.1282
29	SLV 11	0.02729	-0.0003	-0.02967	0.8934	0.0175	2.1361

Nodo	Cont.	Spostamento			Rotazione		
Ind.	N.br.	ux	uy	uz	rx	ry	rz
29	SLV 12	0.02729	-0.0003	-0.02967	0.8934	0.0175	2.1361
29	SLV 13	0.1472	-0.00209	-0.08074	-0.2646	0.0818	-0.6357
29	SLV 14	0.1472	-0.00209	-0.08074	-0.2646	0.0818	-0.6357
29	SLV 15	0.1472	-0.00127	-0.08074	0.2699	0.0818	0.6436
29	SLV 16	0.1472	-0.00127	-0.08074	0.2699	0.0818	0.6436
30	SLU 1	-0.01305	-0.00162	0.02726	0.0009	-0.0091	0
30	SLU 2	-0.01305	-0.00162	0.02726	0.0009	-0.0091	0
30	SLU 3	-0.01305	-0.00162	0.02726	0.0009	-0.0091	0
30	SLU 4	-0.01305	-0.00162	0.02726	0.0009	-0.0091	0
30	SLU 5	-0.01305	-0.00162	0.02726	0.0009	-0.0091	0
30	SLU 6	-0.015	-0.00168	0.03196	0.0009	-0.0104	0
30	SLU 7	-0.015	-0.00168	0.03196	0.0009	-0.0104	0
30	SLU 8	-0.015	-0.00168	0.03196	0.0009	-0.0104	0
30	SLU 9	-0.015	-0.00168	0.03196	0.0009	-0.0104	0
30	SLU 10	-0.01694	-0.00174	0.03666	0.001	-0.0117	0
30	SLU 11	-0.01694	-0.00174	0.03666	0.001	-0.0117	0
30	SLU 12	-0.01694	-0.00174	0.03666	0.001	-0.0117	0
30	SLU 13	-0.01694	-0.00174	0.03666	0.001	-0.0117	0
30	SLU 14	-0.02971	-0.00196	0.06948	0.0011	-0.02	0
30	SLU 15	-0.02971	-0.00196	0.06948	0.0011	-0.02	0
30	SLU 16	-0.02971	-0.00196	0.06948	0.0011	-0.02	0
30	SLU 17	-0.02971	-0.00196	0.06948	0.0011	-0.02	0
30	SLU 18	-0.03165	-0.00202	0.07418	0.0011	-0.0213	0
30	SLU 19	-0.03165	-0.00202	0.07418	0.0011	-0.0213	0
30	SLU 20	-0.03165	-0.00202	0.07418	0.0011	-0.0213	0
30	SLU 21	-0.03165	-0.00202	0.07418	0.0011	-0.0213	0
30	SLU 22	-0.0336	-0.00207	0.07888	0.0012	-0.0226	0
30	SLU 23	-0.0336	-0.00207	0.07888	0.0012	-0.0226	0
30	SLU 24	-0.0336	-0.00207	0.07888	0.0012	-0.0226	0
30	SLU 25	-0.0336	-0.00207	0.07888	0.0012	-0.0226	0
30	SLU 26	-0.05469	-0.00246	0.1328	0.0014	-0.0364	0
30	SLU 27	-0.05469	-0.00246	0.1328	0.0014	-0.0364	0
30	SLU 28	-0.05469	-0.00246	0.1328	0.0014	-0.0364	0
30	SLU 29	-0.05469	-0.00246	0.1328	0.0014	-0.0364	0
30	SLU 30	-0.05664	-0.00252	0.1375	0.0014	-0.0377	0
30	SLU 31	-0.05664	-0.00252	0.1375	0.0014	-0.0377	0
30	SLU 32	-0.05664	-0.00252	0.1375	0.0014	-0.0377	0
30	SLU 33	-0.05664	-0.00252	0.1375	0.0014	-0.0377	0
30	SLU 34	-0.01305	-0.00162	0.02726	0.0009	-0.0091	0
30	SLU 35	-0.01305	-0.00162	0.02726	0.0009	-0.0091	0
30	SLU 36	-0.01305	-0.00162	0.02726	0.0009	-0.0091	0
30	SLU 37	-0.01305	-0.00162	0.02726	0.0009	-0.0091	0
30	SLU 38	-0.01305	-0.00162	0.02726	0.0009	-0.0091	0
30	SLU 39	-0.015	-0.00168	0.03196	0.0009	-0.0104	0
30	SLU 40	-0.015	-0.00168	0.03196	0.0009	-0.0104	0
30	SLU 41	-0.015	-0.00168	0.03196	0.0009	-0.0104	0
30	SLU 42	-0.015	-0.00168	0.03196	0.0009	-0.0104	0
30	SLU 43	-0.01694	-0.00174	0.03666	0.001	-0.0117	0
30	SLU 44	-0.01694	-0.00174	0.03666	0.001	-0.0117	0
30	SLU 45	-0.01694	-0.00174	0.03666	0.001	-0.0117	0
30	SLU 46	-0.01694	-0.00174	0.03666	0.001	-0.0117	0
30	SLU 47	-0.02971	-0.00196	0.06948	0.0011	-0.02	0
30	SLU 48	-0.02971	-0.00196	0.06948	0.0011	-0.02	0
30	SLU 49	-0.02971	-0.00196	0.06948	0.0011	-0.02	0
30	SLU 50	-0.02971	-0.00196	0.06948	0.0011	-0.02	0
30	SLU 51	-0.03165	-0.00202	0.07418	0.0011	-0.0213	0
30	SLU 52	-0.03165	-0.00202	0.07418	0.0011	-0.0213	0
30	SLU 53	-0.03165	-0.00202	0.07418	0.0011	-0.0213	0
30	SLU 54	-0.03165	-0.00202	0.07418	0.0011	-0.0213	0
30	SLU 55	-0.0336	-0.00207	0.07888	0.0012	-0.0226	0
30	SLU 56	-0.0336	-0.00207	0.07888	0.0012	-0.0226	0
30	SLU 57	-0.0336	-0.00207	0.07888	0.0012	-0.0226	0
30	SLU 58	-0.0336	-0.00207	0.07888	0.0012	-0.0226	0
30	SLU 59	-0.05469	-0.00246	0.1328	0.0014	-0.0364	0
30	SLU 60	-0.05469	-0.00246	0.1328	0.0014	-0.0364	0
30	SLU 61	-0.05469	-0.00246	0.1328	0.0014	-0.0364	0
30	SLU 62	-0.05469	-0.00246	0.1328	0.0014	-0.0364	0
30	SLU 63	-0.05664	-0.00252	0.1375	0.0014	-0.0377	0
30	SLU 64	-0.05664	-0.00252	0.1375	0.0014	-0.0377	0
30	SLU 65	-0.05664	-0.00252	0.1375	0.0014	-0.0377	0
30	SLU 66	-0.05664	-0.00252	0.1375	0.0014	-0.0377	0
30	SLU 67	-0.01697	-0.00211	0.03544	0.0012	-0.0118	0
30	SLU 68	-0.01697	-0.00211	0.03544	0.0012	-0.0118	0
30	SLU 69	-0.01697	-0.00211	0.03544	0.0012	-0.0118	0
30	SLU 70	-0.01697	-0.00211	0.03544	0.0012	-0.0118	0
30	SLU 71	-0.01697	-0.00211	0.03544	0.0012	-0.0118	0
30	SLU 72	-0.01891	-0.00217	0.04014	0.0012	-0.0131	0
30	SLU 73	-0.01891	-0.00217	0.04014	0.0012	-0.0131	0
30	SLU 74	-0.01891	-0.00217	0.04014	0.0012	-0.0131	0
30	SLU 75	-0.01891	-0.00217	0.04014	0.0012	-0.0131	0
30	SLU 76	-0.02086	-0.00223	0.04484	0.0013	-0.0145	0
30	SLU 77	-0.02086	-0.00223	0.04484	0.0013	-0.0145	0
30	SLU 78	-0.02086	-0.00223	0.04484	0.0013	-0.0145	0
30	SLU 79	-0.02086	-0.00223	0.04484	0.0013	-0.0145	0
30	SLU 80	-0.03362	-0.00245	0.07765	0.0014	-0.0227	0
30	SLU 81	-0.03362	-0.00245	0.07765	0.0014	-0.0227	0
30	SLU 82	-0.03362	-0.00245	0.07765	0.0014	-0.0227	0
30	SLU 83	-0.03362	-0.00245	0.07765	0.0014	-0.0227	0
30	SLU 84	-0.03557	-0.0025	0.08235	0.0014	-0.024	0
30	SLU 85	-0.03557	-0.0025	0.08235	0.0014	-0.024	0
30	SLU 86	-0.03557	-0.0025	0.08235	0.0014	-0.024	0
30	SLU 87	-0.03557	-0.0025	0.08235	0.0014	-0.024	0
30	SLU 88	-0.03751	-0.00256	0.08705	0.0014	-0.0254	0
30	SLU 89	-0.03751	-0.00256	0.08705	0.0014	-0.0254	0
30	SLU 90	-0.03751	-0.00256	0.08705	0.0014	-0.0254	0

Nodo	Cont.	Spostamento			Rotazione		
Ind.	N.br.	ux	uy	uz	rx	ry	rz
30	SLU 91	-0.03751	-0.00256	0.08705	0.0014	-0.0254	0
30	SLU 92	-0.05861	-0.00295	0.14098	0.0017	-0.0391	0
30	SLU 93	-0.05861	-0.00295	0.14098	0.0017	-0.0391	0
30	SLU 94	-0.05861	-0.00295	0.14098	0.0017	-0.0391	0
30	SLU 95	-0.05861	-0.00295	0.14098	0.0017	-0.0391	0
30	SLU 96	-0.06055	-0.00301	0.14568	0.0017	-0.0404	0
30	SLU 97	-0.06055	-0.00301	0.14568	0.0017	-0.0404	0
30	SLU 98	-0.06055	-0.00301	0.14568	0.0017	-0.0404	0
30	SLU 99	-0.06055	-0.00301	0.14568	0.0017	-0.0404	0
30	SLU 100	-0.01697	-0.00211	0.03544	0.0012	-0.0118	0
30	SLU 101	-0.01697	-0.00211	0.03544	0.0012	-0.0118	0
30	SLU 102	-0.01697	-0.00211	0.03544	0.0012	-0.0118	0
30	SLU 103	-0.01697	-0.00211	0.03544	0.0012	-0.0118	0
30	SLU 104	-0.01697	-0.00211	0.03544	0.0012	-0.0118	0
30	SLU 105	-0.01891	-0.00217	0.04014	0.0012	-0.0131	0
30	SLU 106	-0.01891	-0.00217	0.04014	0.0012	-0.0131	0
30	SLU 107	-0.01891	-0.00217	0.04014	0.0012	-0.0131	0
30	SLU 108	-0.01891	-0.00217	0.04014	0.0012	-0.0131	0
30	SLU 109	-0.02086	-0.00223	0.04484	0.0013	-0.0145	0
30	SLU 110	-0.02086	-0.00223	0.04484	0.0013	-0.0145	0
30	SLU 111	-0.02086	-0.00223	0.04484	0.0013	-0.0145	0
30	SLU 112	-0.02086	-0.00223	0.04484	0.0013	-0.0145	0
30	SLU 113	-0.03362	-0.00245	0.07765	0.0014	-0.0227	0
30	SLU 114	-0.03362	-0.00245	0.07765	0.0014	-0.0227	0
30	SLU 115	-0.03362	-0.00245	0.07765	0.0014	-0.0227	0
30	SLU 116	-0.03362	-0.00245	0.07765	0.0014	-0.0227	0
30	SLU 117	-0.03557	-0.0025	0.08235	0.0014	-0.024	0
30	SLU 118	-0.03557	-0.0025	0.08235	0.0014	-0.024	0
30	SLU 119	-0.03557	-0.0025	0.08235	0.0014	-0.024	0
30	SLU 120	-0.03557	-0.0025	0.08235	0.0014	-0.024	0
30	SLU 121	-0.03751	-0.00256	0.08705	0.0014	-0.0254	0
30	SLU 122	-0.03751	-0.00256	0.08705	0.0014	-0.0254	0
30	SLU 123	-0.03751	-0.00256	0.08705	0.0014	-0.0254	0
30	SLU 124	-0.03751	-0.00256	0.08705	0.0014	-0.0254	0
30	SLU 125	-0.05861	-0.00295	0.14098	0.0017	-0.0391	0
30	SLU 126	-0.05861	-0.00295	0.14098	0.0017	-0.0391	0
30	SLU 127	-0.05861	-0.00295	0.14098	0.0017	-0.0391	0
30	SLU 128	-0.05861	-0.00295	0.14098	0.0017	-0.0391	0
30	SLU 129	-0.06055	-0.00301	0.14568	0.0017	-0.0404	0
30	SLU 130	-0.06055	-0.00301	0.14568	0.0017	-0.0404	0
30	SLU 131	-0.06055	-0.00301	0.14568	0.0017	-0.0404	0
30	SLU 132	-0.06055	-0.00301	0.14568	0.0017	-0.0404	0
30	SLE RA 1	-0.01305	-0.00162	0.02726	0.0009	-0.0091	0
30	SLE RA 2	-0.01305	-0.00162	0.02726	0.0009	-0.0091	0
30	SLE RA 3	-0.01305	-0.00162	0.02726	0.0009	-0.0091	0
30	SLE RA 4	-0.01305	-0.00162	0.02726	0.0009	-0.0091	0
30	SLE RA 5	-0.01305	-0.00162	0.02726	0.0009	-0.0091	0
30	SLE RA 6	-0.01435	-0.00166	0.03039	0.0009	-0.01	0
30	SLE RA 7	-0.01435	-0.00166	0.03039	0.0009	-0.01	0
30	SLE RA 8	-0.01435	-0.00166	0.03039	0.0009	-0.01	0
30	SLE RA 9	-0.01435	-0.00166	0.03039	0.0009	-0.01	0
30	SLE RA 10	-0.01564	-0.0017	0.03353	0.001	-0.0108	0
30	SLE RA 11	-0.01564	-0.0017	0.03353	0.001	-0.0108	0
30	SLE RA 12	-0.01564	-0.0017	0.03353	0.001	-0.0108	0
30	SLE RA 13	-0.01564	-0.0017	0.03353	0.001	-0.0108	0
30	SLE RA 14	-0.02416	-0.00185	0.0554	0.001	-0.0164	0
30	SLE RA 15	-0.02416	-0.00185	0.0554	0.001	-0.0164	0
30	SLE RA 16	-0.02416	-0.00185	0.0554	0.001	-0.0164	0
30	SLE RA 17	-0.02416	-0.00185	0.0554	0.001	-0.0164	0
30	SLE RA 18	-0.02545	-0.00189	0.05854	0.0011	-0.0172	0
30	SLE RA 19	-0.02545	-0.00189	0.05854	0.0011	-0.0172	0
30	SLE RA 20	-0.02545	-0.00189	0.05854	0.0011	-0.0172	0
30	SLE RA 21	-0.02545	-0.00189	0.05854	0.0011	-0.0172	0
30	SLE RA 22	-0.02675	-0.00192	0.06167	0.0011	-0.0181	0
30	SLE RA 23	-0.02675	-0.00192	0.06167	0.0011	-0.0181	0
30	SLE RA 24	-0.02675	-0.00192	0.06167	0.0011	-0.0181	0
30	SLE RA 25	-0.02675	-0.00192	0.06167	0.0011	-0.0181	0
30	SLE RA 26	-0.04081	-0.00218	0.09762	0.0012	-0.0273	0
30	SLE RA 27	-0.04081	-0.00218	0.09762	0.0012	-0.0273	0
30	SLE RA 28	-0.04081	-0.00218	0.09762	0.0012	-0.0273	0
30	SLE RA 29	-0.04081	-0.00218	0.09762	0.0012	-0.0273	0
30	SLE RA 30	-0.04211	-0.00222	0.10075	0.0012	-0.0282	0
30	SLE RA 31	-0.04211	-0.00222	0.10075	0.0012	-0.0282	0
30	SLE RA 32	-0.04211	-0.00222	0.10075	0.0012	-0.0282	0
30	SLE RA 33	-0.04211	-0.00222	0.10075	0.0012	-0.0282	0
30	SLE FR 1	-0.01305	-0.00162	0.02726	0.0009	-0.0091	0
30	SLE FR 2	-0.01305	-0.00162	0.02726	0.0009	-0.0091	0
30	SLE FR 3	-0.01305	-0.00162	0.02726	0.0009	-0.0091	0
30	SLE FR 4	-0.01357	-0.00164	0.02851	0.0009	-0.0094	0
30	SLE FR 5	-0.02416	-0.00185	0.0554	0.001	-0.0164	0
30	SLE QP 1	-0.01305	-0.00162	0.02726	0.0009	-0.0091	0
30	SLO 1	-0.10388	-0.00535	0.19041	-0.0316	-0.0019	-0.0012
30	SLO 2	-0.10388	-0.00535	0.19041	-0.0316	-0.0019	-0.0012
30	SLO 3	-0.10388	0.00212	0.19041	0.0334	-0.0019	0.0013
30	SLO 4	-0.10388	0.00212	0.19041	0.0334	-0.0019	0.0013
30	SLO 5	-0.0403	-0.01407	0.0762	-0.1075	-0.0069	-0.0041
30	SLO 6	-0.0403	-0.01407	0.0762	-0.1075	-0.0069	-0.0041
30	SLO 7	-0.0403	0.01083	0.0762	0.1093	-0.0069	0.0041
30	SLO 8	-0.0403	0.01083	0.0762	0.1093	-0.0069	0.0041
30	SLO 9	0.0142	-0.01408	-0.02168	-0.1075	-0.0112	-0.0041
30	SLO 10	0.0142	-0.01408	-0.02168	-0.1075	-0.0112	-0.0041
30	SLO 11	0.0142	0.01083	-0.02168	0.1094	-0.0112	0.0041
30	SLO 12	0.0142	0.01083	-0.02168	0.1094	-0.0112	0.0041
30	SLO 13	0.07778	-0.00536	-0.13589	-0.0316	-0.0162	-0.0012
30	SLO 14	0.07778	-0.00536	-0.13589	-0.0316	-0.0162	-0.0012

Nodo	Cont.	Spostamento			Rotazione		
Ind.	N.br.	ux	uy	uz	rx	ry	rz
30	SLO 15	0.07778	0.00211	-0.13589	0.0335	-0.0162	0.0013
30	SLO 16	0.07778	0.00211	-0.13589	0.0335	-0.0162	0.0013
30	SLD 1	-0.08758	-0.00507	0.16113	-0.0291	-0.0032	-0.0011
30	SLD 2	-0.08758	-0.00507	0.16113	-0.0291	-0.0032	-0.0011
30	SLD 3	-0.08758	0.00183	0.16113	0.031	-0.0032	0.0012
30	SLD 4	-0.08758	0.00183	0.16113	0.031	-0.0032	0.0012
30	SLD 5	-0.03541	-0.01313	0.06742	-0.0993	-0.0073	-0.0038
30	SLD 6	-0.03541	-0.01313	0.06742	-0.0993	-0.0073	-0.0038
30	SLD 7	-0.03541	0.00988	0.06742	0.1011	-0.0073	0.0038
30	SLD 8	-0.03541	0.00988	0.06742	0.1011	-0.0073	0.0038
30	SLD 9	0.00931	-0.01313	-0.0129	-0.0993	-0.0108	-0.0038
30	SLD 10	0.00931	-0.01313	-0.0129	-0.0993	-0.0108	-0.0038
30	SLD 11	0.00931	0.00988	-0.0129	0.1011	-0.0108	0.0038
30	SLD 12	0.00931	0.00988	-0.0129	0.1011	-0.0108	0.0038
30	SLD 13	0.06148	-0.00508	-0.10661	-0.0291	-0.0149	-0.0011
30	SLD 14	0.06148	-0.00508	-0.10661	-0.0291	-0.0149	-0.0011
30	SLD 15	0.06148	0.00182	-0.10661	0.031	-0.0149	0.0012
30	SLD 16	0.06148	0.00182	-0.10661	0.031	-0.0149	0.0012
30	SLV 1	-0.17955	-0.01072	0.32632	-0.0784	0.004	-0.003
30	SLV 2	-0.17955	-0.01072	0.32632	-0.0784	0.004	-0.003
30	SLV 3	-0.17955	0.00749	0.32632	0.0802	0.004	0.003
30	SLV 4	-0.17955	0.00749	0.32632	0.0802	0.004	0.003
30	SLV 5	-0.063	-0.03197	0.11698	-0.2633	-0.0052	-0.01
30	SLV 6	-0.063	-0.03197	0.11698	-0.2633	-0.0052	-0.01
30	SLV 7	-0.063	0.02872	0.11698	0.2652	-0.0052	0.0101
30	SLV 8	-0.063	0.02872	0.11698	0.2652	-0.0052	0.0101
30	SLV 9	0.0369	-0.03197	-0.06246	-0.2633	-0.013	-0.01
30	SLV 10	0.0369	-0.03197	-0.06246	-0.2633	-0.013	-0.01
30	SLV 11	0.0369	0.02872	-0.06246	0.2652	-0.013	0.0101
30	SLV 12	0.0369	0.02872	-0.06246	0.2652	-0.013	0.0101
30	SLV 13	0.15345	-0.01074	-0.2718	-0.0783	-0.0222	-0.003
30	SLV 14	0.15345	-0.01074	-0.2718	-0.0783	-0.0222	-0.003
30	SLV 15	0.15345	0.00747	-0.2718	0.0802	-0.0222	0.003
30	SLV 16	0.15345	0.00747	-0.2718	0.0802	-0.0222	0.003
31	SLU 1	0.01305	-0.00162	0.02726	0.0009	0.0091	0
31	SLU 2	0.01305	-0.00162	0.02726	0.0009	0.0091	0
31	SLU 3	0.01305	-0.00162	0.02726	0.0009	0.0091	0
31	SLU 4	0.01305	-0.00162	0.02726	0.0009	0.0091	0
31	SLU 5	0.01305	-0.00162	0.02726	0.0009	0.0091	0
31	SLU 6	0.01513	-0.00168	0.03221	0.0009	0.0104	0
31	SLU 7	0.01513	-0.00168	0.03221	0.0009	0.0104	0
31	SLU 8	0.01513	-0.00168	0.03221	0.0009	0.0104	0
31	SLU 9	0.01513	-0.00168	0.03221	0.0009	0.0104	0
31	SLU 10	0.01722	-0.00174	0.03716	0.001	0.0117	0
31	SLU 11	0.01722	-0.00174	0.03716	0.001	0.0117	0
31	SLU 12	0.01722	-0.00174	0.03716	0.001	0.0117	0
31	SLU 13	0.01722	-0.00174	0.03716	0.001	0.0117	0
31	SLU 14	0.02994	-0.00196	0.0699	0.0011	0.02	0
31	SLU 15	0.02994	-0.00196	0.0699	0.0011	0.02	0
31	SLU 16	0.02994	-0.00196	0.0699	0.0011	0.02	0
31	SLU 17	0.02994	-0.00196	0.0699	0.0011	0.02	0
31	SLU 18	0.03202	-0.00202	0.07485	0.0011	0.0213	0
31	SLU 19	0.03202	-0.00202	0.07485	0.0011	0.0213	0
31	SLU 20	0.03202	-0.00202	0.07485	0.0011	0.0213	0
31	SLU 21	0.03202	-0.00202	0.07485	0.0011	0.0213	0
31	SLU 22	0.03411	-0.00207	0.0798	0.0012	0.0226	0
31	SLU 23	0.03411	-0.00207	0.0798	0.0012	0.0226	0
31	SLU 24	0.03411	-0.00207	0.0798	0.0012	0.0226	0
31	SLU 25	0.03411	-0.00207	0.0798	0.0012	0.0226	0
31	SLU 26	0.05528	-0.00246	0.13385	0.0014	0.0363	0
31	SLU 27	0.05528	-0.00246	0.13385	0.0014	0.0363	0
31	SLU 28	0.05528	-0.00246	0.13385	0.0014	0.0363	0
31	SLU 29	0.05528	-0.00246	0.13385	0.0014	0.0363	0
31	SLU 30	0.05736	-0.00252	0.1388	0.0014	0.0376	0
31	SLU 31	0.05736	-0.00252	0.1388	0.0014	0.0376	0
31	SLU 32	0.05736	-0.00252	0.1388	0.0014	0.0376	0
31	SLU 33	0.05736	-0.00252	0.1388	0.0014	0.0376	0
31	SLU 34	0.01305	-0.00162	0.02726	0.0009	0.0091	0
31	SLU 35	0.01305	-0.00162	0.02726	0.0009	0.0091	0
31	SLU 36	0.01305	-0.00162	0.02726	0.0009	0.0091	0
31	SLU 37	0.01305	-0.00162	0.02726	0.0009	0.0091	0
31	SLU 38	0.01305	-0.00162	0.02726	0.0009	0.0091	0
31	SLU 39	0.01513	-0.00168	0.03221	0.0009	0.0104	0
31	SLU 40	0.01513	-0.00168	0.03221	0.0009	0.0104	0
31	SLU 41	0.01513	-0.00168	0.03221	0.0009	0.0104	0
31	SLU 42	0.01513	-0.00168	0.03221	0.0009	0.0104	0
31	SLU 43	0.01722	-0.00174	0.03716	0.001	0.0117	0
31	SLU 44	0.01722	-0.00174	0.03716	0.001	0.0117	0
31	SLU 45	0.01722	-0.00174	0.03716	0.001	0.0117	0
31	SLU 46	0.01722	-0.00174	0.03716	0.001	0.0117	0
31	SLU 47	0.02994	-0.00196	0.0699	0.0011	0.02	0
31	SLU 48	0.02994	-0.00196	0.0699	0.0011	0.02	0
31	SLU 49	0.02994	-0.00196	0.0699	0.0011	0.02	0
31	SLU 50	0.02994	-0.00196	0.0699	0.0011	0.02	0
31	SLU 51	0.03202	-0.00202	0.07485	0.0011	0.0213	0
31	SLU 52	0.03202	-0.00202	0.07485	0.0011	0.0213	0
31	SLU 53	0.03202	-0.00202	0.07485	0.0011	0.0213	0
31	SLU 54	0.03202	-0.00202	0.07485	0.0011	0.0213	0
31	SLU 55	0.03411	-0.00207	0.0798	0.0012	0.0226	0
31	SLU 56	0.03411	-0.00207	0.0798	0.0012	0.0226	0
31	SLU 57	0.03411	-0.00207	0.0798	0.0012	0.0226	0
31	SLU 58	0.03411	-0.00207	0.0798	0.0012	0.0226	0
31	SLU 59	0.05528	-0.00246	0.13385	0.0014	0.0363	0
31	SLU 60	0.05528	-0.00246	0.13385	0.0014	0.0363	0
31	SLU 61	0.05528	-0.00246	0.13385	0.0014	0.0363	0

Nodo	Cont.	Spostamento			Rotazione		
Ind.	N.br.	ux	uy	uz	rx	ry	rz
31	SLU 62	0.05528	-0.00246	0.13385	0.0014	0.0363	0
31	SLU 63	0.05736	-0.00252	0.1388	0.0014	0.0376	0
31	SLU 64	0.05736	-0.00252	0.1388	0.0014	0.0376	0
31	SLU 65	0.05736	-0.00252	0.1388	0.0014	0.0376	0
31	SLU 66	0.05736	-0.00252	0.1388	0.0014	0.0376	0
31	SLU 67	0.01697	-0.00211	0.03544	0.0012	0.0118	0
31	SLU 68	0.01697	-0.00211	0.03544	0.0012	0.0118	0
31	SLU 69	0.01697	-0.00211	0.03544	0.0012	0.0118	0
31	SLU 70	0.01697	-0.00211	0.03544	0.0012	0.0118	0
31	SLU 71	0.01697	-0.00211	0.03544	0.0012	0.0118	0
31	SLU 72	0.01905	-0.00217	0.04039	0.0012	0.0131	0
31	SLU 73	0.01905	-0.00217	0.04039	0.0012	0.0131	0
31	SLU 74	0.01905	-0.00217	0.04039	0.0012	0.0131	0
31	SLU 75	0.01905	-0.00217	0.04039	0.0012	0.0131	0
31	SLU 76	0.02113	-0.00223	0.04534	0.0012	0.0144	0
31	SLU 77	0.02113	-0.00223	0.04534	0.0012	0.0144	0
31	SLU 78	0.02113	-0.00223	0.04534	0.0012	0.0144	0
31	SLU 79	0.02113	-0.00223	0.04534	0.0012	0.0144	0
31	SLU 80	0.03386	-0.00245	0.07807	0.0014	0.0227	0
31	SLU 81	0.03386	-0.00245	0.07807	0.0014	0.0227	0
31	SLU 82	0.03386	-0.00245	0.07807	0.0014	0.0227	0
31	SLU 83	0.03386	-0.00245	0.07807	0.0014	0.0227	0
31	SLU 84	0.03594	-0.0025	0.08302	0.0014	0.024	0
31	SLU 85	0.03594	-0.0025	0.08302	0.0014	0.024	0
31	SLU 86	0.03594	-0.0025	0.08302	0.0014	0.024	0
31	SLU 87	0.03594	-0.0025	0.08302	0.0014	0.024	0
31	SLU 88	0.03802	-0.00256	0.08798	0.0014	0.0253	0
31	SLU 89	0.03802	-0.00256	0.08798	0.0014	0.0253	0
31	SLU 90	0.03802	-0.00256	0.08798	0.0014	0.0253	0
31	SLU 91	0.03802	-0.00256	0.08798	0.0014	0.0253	0
31	SLU 92	0.05919	-0.00295	0.14203	0.0017	0.039	0
31	SLU 93	0.05919	-0.00295	0.14203	0.0017	0.039	0
31	SLU 94	0.05919	-0.00295	0.14203	0.0017	0.039	0
31	SLU 95	0.05919	-0.00295	0.14203	0.0017	0.039	0
31	SLU 96	0.06127	-0.00301	0.14698	0.0017	0.0404	0
31	SLU 97	0.06127	-0.00301	0.14698	0.0017	0.0404	0
31	SLU 98	0.06127	-0.00301	0.14698	0.0017	0.0404	0
31	SLU 99	0.06127	-0.00301	0.14698	0.0017	0.0404	0
31	SLU 100	0.01697	-0.00211	0.03544	0.0012	0.0118	0
31	SLU 101	0.01697	-0.00211	0.03544	0.0012	0.0118	0
31	SLU 102	0.01697	-0.00211	0.03544	0.0012	0.0118	0
31	SLU 103	0.01697	-0.00211	0.03544	0.0012	0.0118	0
31	SLU 104	0.01697	-0.00211	0.03544	0.0012	0.0118	0
31	SLU 105	0.01905	-0.00217	0.04039	0.0012	0.0131	0
31	SLU 106	0.01905	-0.00217	0.04039	0.0012	0.0131	0
31	SLU 107	0.01905	-0.00217	0.04039	0.0012	0.0131	0
31	SLU 108	0.01905	-0.00217	0.04039	0.0012	0.0131	0
31	SLU 109	0.02113	-0.00223	0.04534	0.0012	0.0144	0
31	SLU 110	0.02113	-0.00223	0.04534	0.0012	0.0144	0
31	SLU 111	0.02113	-0.00223	0.04534	0.0012	0.0144	0
31	SLU 112	0.02113	-0.00223	0.04534	0.0012	0.0144	0
31	SLU 113	0.03386	-0.00245	0.07807	0.0014	0.0227	0
31	SLU 114	0.03386	-0.00245	0.07807	0.0014	0.0227	0
31	SLU 115	0.03386	-0.00245	0.07807	0.0014	0.0227	0
31	SLU 116	0.03386	-0.00245	0.07807	0.0014	0.0227	0
31	SLU 117	0.03594	-0.0025	0.08302	0.0014	0.024	0
31	SLU 118	0.03594	-0.0025	0.08302	0.0014	0.024	0
31	SLU 119	0.03594	-0.0025	0.08302	0.0014	0.024	0
31	SLU 120	0.03594	-0.0025	0.08302	0.0014	0.024	0
31	SLU 121	0.03802	-0.00256	0.08798	0.0014	0.0253	0
31	SLU 122	0.03802	-0.00256	0.08798	0.0014	0.0253	0
31	SLU 123	0.03802	-0.00256	0.08798	0.0014	0.0253	0
31	SLU 124	0.03802	-0.00256	0.08798	0.0014	0.0253	0
31	SLU 125	0.05919	-0.00295	0.14203	0.0017	0.039	0
31	SLU 126	0.05919	-0.00295	0.14203	0.0017	0.039	0
31	SLU 127	0.05919	-0.00295	0.14203	0.0017	0.039	0
31	SLU 128	0.05919	-0.00295	0.14203	0.0017	0.039	0
31	SLU 129	0.06127	-0.00301	0.14698	0.0017	0.0404	0
31	SLU 130	0.06127	-0.00301	0.14698	0.0017	0.0404	0
31	SLU 131	0.06127	-0.00301	0.14698	0.0017	0.0404	0
31	SLU 132	0.06127	-0.00301	0.14698	0.0017	0.0404	0
31	SLE RA 1	0.01305	-0.00162	0.02726	0.0009	0.0091	0
31	SLE RA 2	0.01305	-0.00162	0.02726	0.0009	0.0091	0
31	SLE RA 3	0.01305	-0.00162	0.02726	0.0009	0.0091	0
31	SLE RA 4	0.01305	-0.00162	0.02726	0.0009	0.0091	0
31	SLE RA 5	0.01305	-0.00162	0.02726	0.0009	0.0091	0
31	SLE RA 6	0.01444	-0.00166	0.03056	0.0009	0.01	0
31	SLE RA 7	0.01444	-0.00166	0.03056	0.0009	0.01	0
31	SLE RA 8	0.01444	-0.00166	0.03056	0.0009	0.01	0
31	SLE RA 9	0.01444	-0.00166	0.03056	0.0009	0.01	0
31	SLE RA 10	0.01583	-0.0017	0.03386	0.001	0.0108	0
31	SLE RA 11	0.01583	-0.0017	0.03386	0.001	0.0108	0
31	SLE RA 12	0.01583	-0.0017	0.03386	0.001	0.0108	0
31	SLE RA 13	0.01583	-0.0017	0.03386	0.001	0.0108	0
31	SLE RA 14	0.02431	-0.00185	0.05568	0.001	0.0163	0
31	SLE RA 15	0.02431	-0.00185	0.05568	0.001	0.0163	0
31	SLE RA 16	0.02431	-0.00185	0.05568	0.001	0.0163	0
31	SLE RA 17	0.02431	-0.00185	0.05568	0.001	0.0163	0
31	SLE RA 18	0.0257	-0.00189	0.05898	0.0011	0.0172	0
31	SLE RA 19	0.0257	-0.00189	0.05898	0.0011	0.0172	0
31	SLE RA 20	0.0257	-0.00189	0.05898	0.0011	0.0172	0
31	SLE RA 21	0.0257	-0.00189	0.05898	0.0011	0.0172	0
31	SLE RA 22	0.02709	-0.00192	0.06228	0.0011	0.0181	0
31	SLE RA 23	0.02709	-0.00192	0.06228	0.0011	0.0181	0
31	SLE RA 24	0.02709	-0.00192	0.06228	0.0011	0.0181	0

Nodo	Cont.	Spostamento			Rotazione		
Ind.	N.br.	ux	uy	uz	rx	ry	rz
31	SLE RA 25	0.02709	-0.00192	0.06228	0.0011	0.0181	0
31	SLE RA 26	0.0412	-0.00218	0.09832	0.0012	0.0272	0
31	SLE RA 27	0.0412	-0.00218	0.09832	0.0012	0.0272	0
31	SLE RA 28	0.0412	-0.00218	0.09832	0.0012	0.0272	0
31	SLE RA 29	0.0412	-0.00218	0.09832	0.0012	0.0272	0
31	SLE RA 30	0.04259	-0.00222	0.10162	0.0012	0.0281	0
31	SLE RA 31	0.04259	-0.00222	0.10162	0.0012	0.0281	0
31	SLE RA 32	0.04259	-0.00222	0.10162	0.0012	0.0281	0
31	SLE RA 33	0.04259	-0.00222	0.10162	0.0012	0.0281	0
31	SLE FR 1	0.01305	-0.00162	0.02726	0.0009	0.0091	0
31	SLE FR 2	0.01305	-0.00162	0.02726	0.0009	0.0091	0
31	SLE FR 3	0.01305	-0.00162	0.02726	0.0009	0.0091	0
31	SLE FR 4	0.01361	-0.00164	0.02858	0.0009	0.0094	0
31	SLE FR 5	0.02431	-0.00185	0.05568	0.001	0.0163	0
31	SLE QP 1	0.01305	-0.00162	0.02726	0.0009	0.0091	0
31	SLO 1	-0.07778	-0.00536	-0.13589	-0.0316	0.0162	0.0012
31	SLO 2	-0.07778	-0.00536	-0.13589	-0.0316	0.0162	0.0012
31	SLO 3	-0.07778	0.00211	-0.13589	0.0335	0.0162	-0.0013
31	SLO 4	-0.07778	0.00211	-0.13589	0.0335	0.0162	-0.0013
31	SLO 5	-0.0142	-0.01408	-0.02168	-0.1075	0.0112	0.0041
31	SLO 6	-0.0142	-0.01408	-0.02168	-0.1075	0.0112	0.0041
31	SLO 7	-0.0142	0.01083	-0.02168	0.1094	0.0112	-0.0041
31	SLO 8	-0.0142	0.01083	-0.02168	0.1094	0.0112	-0.0041
31	SLO 9	0.0403	-0.01407	0.0762	-0.1075	0.0069	0.0041
31	SLO 10	0.0403	-0.01407	0.0762	-0.1075	0.0069	0.0041
31	SLO 11	0.0403	0.01083	0.0762	0.1093	0.0069	-0.0041
31	SLO 12	0.0403	0.01083	0.0762	0.1093	0.0069	-0.0041
31	SLO 13	0.10388	-0.00535	0.19041	-0.0316	0.0019	0.0012
31	SLO 14	0.10388	-0.00535	0.19041	-0.0316	0.0019	0.0012
31	SLO 15	0.10388	0.00212	0.19041	0.0334	0.0019	-0.0013
31	SLO 16	0.10388	0.00212	0.19041	0.0334	0.0019	-0.0013
31	SLD 1	-0.06148	-0.00508	-0.10661	-0.0291	0.0149	0.0011
31	SLD 2	-0.06148	-0.00508	-0.10661	-0.0291	0.0149	0.0011
31	SLD 3	-0.06148	0.00182	-0.10661	0.031	0.0149	-0.0012
31	SLD 4	-0.06148	0.00182	-0.10661	0.031	0.0149	-0.0012
31	SLD 5	-0.00931	-0.01313	-0.0129	-0.0993	0.0108	0.0038
31	SLD 6	-0.00931	-0.01313	-0.0129	-0.0993	0.0108	0.0038
31	SLD 7	-0.00931	0.00988	-0.0129	0.1011	0.0108	-0.0038
31	SLD 8	-0.00931	0.00988	-0.0129	0.1011	0.0108	-0.0038
31	SLD 9	0.03541	-0.01313	0.06742	-0.0993	0.0073	0.0038
31	SLD 10	0.03541	-0.01313	0.06742	-0.0993	0.0073	0.0038
31	SLD 11	0.03541	0.00988	0.06742	0.1011	0.0073	-0.0038
31	SLD 12	0.03541	0.00988	0.06742	0.1011	0.0073	-0.0038
31	SLD 13	0.08758	-0.00507	0.16113	-0.0291	0.0032	0.0011
31	SLD 14	0.08758	-0.00507	0.16113	-0.0291	0.0032	0.0011
31	SLD 15	0.08758	0.00183	0.16113	0.031	0.0032	-0.0012
31	SLD 16	0.08758	0.00183	0.16113	0.031	0.0032	-0.0012
31	SLV 1	-0.15345	-0.01074	-0.2718	-0.0783	0.0222	0.003
31	SLV 2	-0.15345	-0.01074	-0.2718	-0.0783	0.0222	0.003
31	SLV 3	-0.15345	0.00747	-0.2718	0.0802	0.0222	-0.003
31	SLV 4	-0.15345	0.00747	-0.2718	0.0802	0.0222	-0.003
31	SLV 5	-0.0369	-0.03197	-0.06246	-0.2633	0.013	0.01
31	SLV 6	-0.0369	-0.03197	-0.06246	-0.2633	0.013	0.01
31	SLV 7	-0.0369	0.02872	-0.06246	0.2652	0.013	-0.0101
31	SLV 8	-0.0369	0.02872	-0.06246	0.2652	0.013	-0.0101
31	SLV 9	0.063	-0.03197	0.11698	-0.2633	0.0052	0.01
31	SLV 10	0.063	-0.03197	0.11698	-0.2633	0.0052	0.01
31	SLV 11	0.063	0.02872	0.11698	0.2652	0.0052	-0.0101
31	SLV 12	0.063	0.02872	0.11698	0.2652	0.0052	-0.0101
31	SLV 13	0.17955	-0.01072	0.32632	-0.0784	-0.004	0.003
31	SLV 14	0.17955	-0.01072	0.32632	-0.0784	-0.004	0.003
31	SLV 15	0.17955	0.00749	0.32632	0.0802	-0.004	-0.003
31	SLV 16	0.17955	0.00749	0.32632	0.0802	-0.004	-0.003
32	SLU 1	0.0241	-0.00167	-0.00778	0.0026	0.01	-0.004
32	SLU 2	0.0241	-0.00167	-0.00778	0.0026	0.01	-0.004
32	SLU 3	0.0241	-0.00167	-0.00778	0.0026	0.01	-0.004
32	SLU 4	0.0241	-0.00167	-0.00778	0.0026	0.01	-0.004
32	SLU 5	0.0241	-0.00167	-0.00778	0.0026	0.01	-0.004
32	SLU 6	0.02762	-0.00172	-0.00753	0.0027	0.0114	-0.0041
32	SLU 7	0.02762	-0.00172	-0.00753	0.0027	0.0114	-0.0041
32	SLU 8	0.02762	-0.00172	-0.00753	0.0027	0.0114	-0.0041
32	SLU 9	0.02762	-0.00172	-0.00753	0.0027	0.0114	-0.0041
32	SLU 10	0.03114	-0.00178	-0.00729	0.0028	0.0128	-0.0042
32	SLU 11	0.03114	-0.00178	-0.00729	0.0028	0.0128	-0.0042
32	SLU 12	0.03114	-0.00178	-0.00729	0.0028	0.0128	-0.0043
32	SLU 13	0.03114	-0.00178	-0.00729	0.0028	0.0128	-0.0043
32	SLU 14	0.05166	-0.00201	-0.00341	0.0031	0.0222	-0.0046
32	SLU 15	0.05166	-0.00201	-0.00341	0.0031	0.0222	-0.0046
32	SLU 16	0.05166	-0.00201	-0.00341	0.0031	0.0222	-0.0046
32	SLU 17	0.05166	-0.00201	-0.00341	0.0031	0.0222	-0.0046
32	SLU 18	0.05517	-0.00207	-0.00316	0.0031	0.0237	-0.0048
32	SLU 19	0.05517	-0.00207	-0.00316	0.0032	0.0237	-0.0048
32	SLU 20	0.05517	-0.00207	-0.00316	0.0032	0.0237	-0.0048
32	SLU 21	0.05517	-0.00207	-0.00316	0.0032	0.0237	-0.0048
32	SLU 22	0.05869	-0.00213	-0.00291	0.0032	0.0251	-0.0049
32	SLU 23	0.05869	-0.00213	-0.00291	0.0032	0.0251	-0.0049
32	SLU 24	0.05869	-0.00212	-0.00291	0.0032	0.0251	-0.0049
32	SLU 25	0.05869	-0.00213	-0.00291	0.0032	0.0251	-0.0049
32	SLU 26	0.09298	-0.00252	0.00316	0.0037	0.0406	-0.0056
32	SLU 27	0.09298	-0.00252	0.00316	0.0038	0.0406	-0.0056
32	SLU 28	0.09298	-0.00252	0.00316	0.0038	0.0406	-0.0056
32	SLU 29	0.09298	-0.00252	0.00316	0.0038	0.0406	-0.0056
32	SLU 30	0.0965	-0.00258	0.00341	0.0038	0.042	-0.0057
32	SLU 31	0.0965	-0.00258	0.00341	0.0038	0.042	-0.0057
32	SLU 32	0.0965	-0.00258	0.00341	0.0038	0.042	-0.0057

Nodo	Cont.	Spostamento			Rotazione		
Ind.	N.br.	ux	uy	uz	rx	ry	rz
32	SLU 33	0.0965	-0.00258	0.00341	0.0038	0.042	-0.0057
32	SLU 34	0.0241	-0.00167	-0.00778	0.0026	0.01	-0.004
32	SLU 35	0.0241	-0.00167	-0.00778	0.0026	0.01	-0.004
32	SLU 36	0.0241	-0.00167	-0.00778	0.0026	0.01	-0.004
32	SLU 37	0.0241	-0.00167	-0.00778	0.0026	0.01	-0.004
32	SLU 38	0.0241	-0.00167	-0.00778	0.0026	0.01	-0.004
32	SLU 39	0.02762	-0.00172	-0.00753	0.0027	0.0114	-0.0041
32	SLU 40	0.02762	-0.00172	-0.00753	0.0027	0.0114	-0.0041
32	SLU 41	0.02762	-0.00172	-0.00753	0.0027	0.0114	-0.0041
32	SLU 42	0.02762	-0.00172	-0.00753	0.0027	0.0114	-0.0041
32	SLU 43	0.03114	-0.00178	-0.00729	0.0028	0.0128	-0.0042
32	SLU 44	0.03114	-0.00178	-0.00729	0.0028	0.0128	-0.0042
32	SLU 45	0.03114	-0.00178	-0.00729	0.0028	0.0128	-0.0043
32	SLU 46	0.03114	-0.00178	-0.00729	0.0028	0.0128	-0.0043
32	SLU 47	0.05166	-0.00201	-0.00341	0.0031	0.0222	-0.0046
32	SLU 48	0.05166	-0.00201	-0.00341	0.0031	0.0222	-0.0046
32	SLU 49	0.05166	-0.00201	-0.00341	0.0031	0.0222	-0.0046
32	SLU 50	0.05166	-0.00201	-0.00341	0.0031	0.0222	-0.0046
32	SLU 51	0.05517	-0.00207	-0.00316	0.0031	0.0237	-0.0048
32	SLU 52	0.05517	-0.00207	-0.00316	0.0032	0.0237	-0.0048
32	SLU 53	0.05517	-0.00207	-0.00316	0.0032	0.0237	-0.0048
32	SLU 54	0.05517	-0.00207	-0.00316	0.0032	0.0237	-0.0048
32	SLU 55	0.05869	-0.00213	-0.00291	0.0032	0.0251	-0.0049
32	SLU 56	0.05869	-0.00213	-0.00291	0.0032	0.0251	-0.0049
32	SLU 57	0.05869	-0.00212	-0.00291	0.0032	0.0251	-0.0049
32	SLU 58	0.05869	-0.00213	-0.00291	0.0032	0.0251	-0.0049
32	SLU 59	0.09298	-0.00252	0.00316	0.0037	0.0406	-0.0056
32	SLU 60	0.09298	-0.00252	0.00316	0.0038	0.0406	-0.0056
32	SLU 61	0.09298	-0.00252	0.00316	0.0038	0.0406	-0.0056
32	SLU 62	0.09298	-0.00252	0.00316	0.0038	0.0406	-0.0056
32	SLU 63	0.0965	-0.00258	0.00341	0.0038	0.042	-0.0057
32	SLU 64	0.0965	-0.00258	0.00341	0.0038	0.042	-0.0057
32	SLU 65	0.0965	-0.00258	0.00341	0.0038	0.042	-0.0057
32	SLU 66	0.0965	-0.00258	0.00341	0.0038	0.042	-0.0057
32	SLU 67	0.03133	-0.00217	-0.01012	0.0034	0.013	-0.0051
32	SLU 68	0.03133	-0.00217	-0.01012	0.0034	0.013	-0.0052
32	SLU 69	0.03133	-0.00217	-0.01012	0.0034	0.013	-0.0052
32	SLU 70	0.03133	-0.00217	-0.01012	0.0034	0.013	-0.0052
32	SLU 71	0.03133	-0.00217	-0.01012	0.0034	0.013	-0.0052
32	SLU 72	0.03485	-0.00222	-0.00987	0.0035	0.0144	-0.0053
32	SLU 73	0.03485	-0.00222	-0.00987	0.0035	0.0144	-0.0053
32	SLU 74	0.03485	-0.00222	-0.00987	0.0035	0.0144	-0.0053
32	SLU 75	0.03485	-0.00222	-0.00987	0.0035	0.0144	-0.0053
32	SLU 76	0.03837	-0.00228	-0.00962	0.0035	0.0158	-0.0054
32	SLU 77	0.03837	-0.00228	-0.00962	0.0036	0.0158	-0.0054
32	SLU 78	0.03837	-0.00228	-0.00962	0.0036	0.0158	-0.0054
32	SLU 79	0.03837	-0.00228	-0.00962	0.0036	0.0158	-0.0054
32	SLU 80	0.05889	-0.00251	-0.00574	0.0038	0.0252	-0.0058
32	SLU 81	0.05889	-0.00251	-0.00574	0.0038	0.0252	-0.0058
32	SLU 82	0.05889	-0.00251	-0.00574	0.0038	0.0252	-0.0058
32	SLU 83	0.05889	-0.00251	-0.00574	0.0038	0.0252	-0.0058
32	SLU 84	0.0624	-0.00257	-0.00549	0.0039	0.0267	-0.0059
32	SLU 85	0.0624	-0.00257	-0.00549	0.0039	0.0267	-0.006
32	SLU 86	0.0624	-0.00257	-0.00549	0.0039	0.0267	-0.006
32	SLU 87	0.0624	-0.00257	-0.00549	0.0039	0.0267	-0.006
32	SLU 88	0.06592	-0.00262	-0.00525	0.004	0.0281	-0.0061
32	SLU 89	0.06592	-0.00262	-0.00525	0.004	0.0281	-0.0061
32	SLU 90	0.06592	-0.00262	-0.00525	0.004	0.0281	-0.0061
32	SLU 91	0.06592	-0.00262	-0.00525	0.004	0.0281	-0.0061
32	SLU 92	0.10022	-0.00302	0.00082	0.0045	0.0436	-0.0068
32	SLU 93	0.10022	-0.00302	0.00082	0.0045	0.0436	-0.0068
32	SLU 94	0.10022	-0.00302	0.00082	0.0045	0.0436	-0.0068
32	SLU 95	0.10022	-0.00302	0.00082	0.0045	0.0436	-0.0068
32	SLU 96	0.10373	-0.00308	0.00107	0.0046	0.045	-0.0069
32	SLU 97	0.10373	-0.00308	0.00107	0.0046	0.045	-0.0069
32	SLU 98	0.10373	-0.00308	0.00107	0.0046	0.045	-0.0069
32	SLU 99	0.10373	-0.00308	0.00107	0.0046	0.045	-0.0069
32	SLU 100	0.03133	-0.00217	-0.01012	0.0034	0.013	-0.0051
32	SLU 101	0.03133	-0.00217	-0.01012	0.0034	0.013	-0.0052
32	SLU 102	0.03133	-0.00217	-0.01012	0.0034	0.013	-0.0052
32	SLU 103	0.03133	-0.00217	-0.01012	0.0034	0.013	-0.0052
32	SLU 104	0.03133	-0.00217	-0.01012	0.0034	0.013	-0.0052
32	SLU 105	0.03485	-0.00222	-0.00987	0.0035	0.0144	-0.0053
32	SLU 106	0.03485	-0.00222	-0.00987	0.0035	0.0144	-0.0053
32	SLU 107	0.03485	-0.00222	-0.00987	0.0035	0.0144	-0.0053
32	SLU 108	0.03485	-0.00222	-0.00987	0.0035	0.0144	-0.0053
32	SLU 109	0.03837	-0.00228	-0.00962	0.0035	0.0158	-0.0054
32	SLU 110	0.03837	-0.00228	-0.00962	0.0036	0.0158	-0.0054
32	SLU 111	0.03837	-0.00228	-0.00962	0.0036	0.0158	-0.0054
32	SLU 112	0.03837	-0.00228	-0.00962	0.0036	0.0158	-0.0054
32	SLU 113	0.05889	-0.00251	-0.00574	0.0038	0.0252	-0.0058
32	SLU 114	0.05889	-0.00251	-0.00574	0.0038	0.0252	-0.0058
32	SLU 115	0.05889	-0.00251	-0.00574	0.0038	0.0252	-0.0058
32	SLU 116	0.05889	-0.00251	-0.00574	0.0038	0.0252	-0.0058
32	SLU 117	0.0624	-0.00257	-0.00549	0.0039	0.0267	-0.0059
32	SLU 118	0.0624	-0.00257	-0.00549	0.0039	0.0267	-0.006
32	SLU 119	0.0624	-0.00257	-0.00549	0.0039	0.0267	-0.006
32	SLU 120	0.0624	-0.00257	-0.00549	0.0039	0.0267	-0.006
32	SLU 121	0.06592	-0.00262	-0.00525	0.004	0.0281	-0.0061
32	SLU 122	0.06592	-0.00262	-0.00525	0.004	0.0281	-0.0061
32	SLU 123	0.06592	-0.00262	-0.00525	0.004	0.0281	-0.0061
32	SLU 124	0.06592	-0.00262	-0.00525	0.004	0.0281	-0.0061
32	SLU 125	0.10022	-0.00302	0.00082	0.0045	0.0436	-0.0068
32	SLU 126	0.10022	-0.00302	0.00082	0.0045	0.0436	-0.0068
32	SLU 127	0.10022	-0.00302	0.00082	0.0045	0.0436	-0.0068

Nodo	Cont.	Spostamento			Rotazione		
Ind.	N.br.	ux	uy	uz	rx	ry	rz
32	SLU 128	0.10022	-0.00302	0.00082	0.0045	0.0436	-0.0068
32	SLU 129	0.10373	-0.00308	0.00107	0.0046	0.045	-0.0069
32	SLU 130	0.10373	-0.00308	0.00107	0.0046	0.045	-0.0069
32	SLU 131	0.10373	-0.00308	0.00107	0.0046	0.045	-0.0069
32	SLU 132	0.10373	-0.00308	0.00107	0.0046	0.045	-0.0069
32	SLE RA 1	0.0241	-0.00167	-0.00778	0.0026	0.01	-0.004
32	SLE RA 2	0.0241	-0.00167	-0.00778	0.0026	0.01	-0.004
32	SLE RA 3	0.0241	-0.00167	-0.00778	0.0026	0.01	-0.004
32	SLE RA 4	0.0241	-0.00167	-0.00778	0.0026	0.01	-0.004
32	SLE RA 5	0.0241	-0.00167	-0.00778	0.0026	0.01	-0.004
32	SLE RA 6	0.02645	-0.0017	-0.00762	0.0027	0.011	-0.0041
32	SLE RA 7	0.02645	-0.0017	-0.00762	0.0027	0.011	-0.0041
32	SLE RA 8	0.02645	-0.0017	-0.00762	0.0027	0.011	-0.0041
32	SLE RA 9	0.02645	-0.0017	-0.00762	0.0027	0.011	-0.0041
32	SLE RA 10	0.02879	-0.00174	-0.00745	0.0027	0.0119	-0.0041
32	SLE RA 11	0.02879	-0.00174	-0.00745	0.0027	0.0119	-0.0041
32	SLE RA 12	0.02879	-0.00174	-0.00745	0.0027	0.0119	-0.0042
32	SLE RA 13	0.02879	-0.00174	-0.00745	0.0027	0.0119	-0.0042
32	SLE RA 14	0.04247	-0.00189	-0.00486	0.0029	0.0182	-0.0044
32	SLE RA 15	0.04247	-0.00189	-0.00486	0.0029	0.0182	-0.0044
32	SLE RA 16	0.04247	-0.00189	-0.00486	0.0029	0.0182	-0.0044
32	SLE RA 17	0.04247	-0.00189	-0.00486	0.0029	0.0182	-0.0044
32	SLE RA 18	0.04482	-0.00193	-0.0047	0.003	0.0191	-0.0045
32	SLE RA 19	0.04482	-0.00193	-0.0047	0.003	0.0191	-0.0045
32	SLE RA 20	0.04482	-0.00193	-0.0047	0.003	0.0191	-0.0045
32	SLE RA 21	0.04482	-0.00193	-0.0047	0.003	0.0191	-0.0045
32	SLE RA 22	0.04716	-0.00197	-0.00453	0.003	0.02	-0.0046
32	SLE RA 23	0.04716	-0.00197	-0.00453	0.003	0.02	-0.0046
32	SLE RA 24	0.04716	-0.00197	-0.00453	0.003	0.02	-0.0046
32	SLE RA 25	0.04716	-0.00197	-0.00453	0.003	0.02	-0.0046
32	SLE RA 26	0.07002	-0.00224	-0.00049	0.0034	0.0304	-0.005
32	SLE RA 27	0.07002	-0.00224	-0.00049	0.0034	0.0304	-0.005
32	SLE RA 28	0.07002	-0.00224	-0.00049	0.0034	0.0304	-0.005
32	SLE RA 29	0.07002	-0.00224	-0.00049	0.0034	0.0304	-0.005
32	SLE RA 30	0.07237	-0.00228	-0.00032	0.0034	0.0313	-0.0051
32	SLE RA 31	0.07237	-0.00228	-0.00032	0.0034	0.0313	-0.0051
32	SLE RA 32	0.07237	-0.00228	-0.00032	0.0034	0.0313	-0.0051
32	SLE RA 33	0.07237	-0.00228	-0.00032	0.0034	0.0313	-0.0051
32	SLE FR 1	0.0241	-0.00167	-0.00778	0.0026	0.01	-0.004
32	SLE FR 2	0.0241	-0.00167	-0.00778	0.0026	0.01	-0.004
32	SLE FR 3	0.0241	-0.00167	-0.00778	0.0026	0.01	-0.004
32	SLE FR 4	0.02504	-0.00168	-0.00772	0.0026	0.0104	-0.004
32	SLE FR 5	0.04247	-0.00189	-0.00486	0.0029	0.0182	-0.0044
32	SLE QP 1	0.0241	-0.00167	-0.00778	0.0026	0.01	-0.004
32	SLO 1	-0.06935	-0.00184	-0.04758	-0.1071	-0.0401	0.2585
32	SLO 2	-0.06935	-0.00184	-0.04758	-0.1071	-0.0401	0.2585
32	SLO 3	-0.06935	-0.0015	-0.04758	0.1123	-0.0401	-0.2664
32	SLO 4	-0.06935	-0.0015	-0.04758	0.1123	-0.0401	-0.2664
32	SLO 5	-0.00393	-0.00223	-0.01972	-0.3629	-0.005	0.8709
32	SLO 6	-0.00393	-0.00223	-0.01972	-0.3629	-0.005	0.8709
32	SLO 7	-0.00393	-0.0011	-0.01972	0.3681	-0.005	-0.8789
32	SLO 8	-0.00393	-0.0011	-0.01972	0.3681	-0.005	-0.8789
32	SLO 9	0.05214	-0.00223	0.00416	-0.3629	0.025	0.871
32	SLO 10	0.05214	-0.00223	0.00416	-0.3629	0.025	0.871
32	SLO 11	0.05214	-0.0011	0.00416	0.3681	0.025	-0.8789
32	SLO 12	0.05214	-0.0011	0.00416	0.3681	0.025	-0.8789
32	SLO 13	0.11755	-0.00183	0.03202	-0.1071	0.0601	0.2585
32	SLO 14	0.11755	-0.00183	0.03202	-0.1071	0.0601	0.2585
32	SLO 15	0.11755	-0.00149	0.03202	0.1122	0.0601	-0.2664
32	SLO 16	0.11755	-0.00149	0.03202	0.1122	0.0601	-0.2664
32	SLD 1	-0.05258	-0.00183	-0.04044	-0.0987	-0.0311	0.2386
32	SLD 2	-0.05258	-0.00183	-0.04044	-0.0987	-0.0311	0.2386
32	SLD 3	-0.05258	-0.00152	-0.04044	0.1039	-0.0311	-0.2465
32	SLD 4	-0.05258	-0.00152	-0.04044	0.1039	-0.0311	-0.2465
32	SLD 5	0.0011	-0.00219	-0.01758	-0.3352	-0.0023	0.8044
32	SLD 6	0.0011	-0.00219	-0.01758	-0.3352	-0.0023	0.8044
32	SLD 7	0.0011	-0.00115	-0.01758	0.3403	-0.0023	-0.8124
32	SLD 8	0.0011	-0.00115	-0.01758	0.3403	-0.0023	-0.8124
32	SLD 9	0.04711	-0.00218	0.00201	-0.3352	0.0223	0.8044
32	SLD 10	0.04711	-0.00218	0.00201	-0.3352	0.0223	0.8044
32	SLD 11	0.04711	-0.00114	0.00201	0.3403	0.0223	-0.8124
32	SLD 12	0.04711	-0.00114	0.00201	0.3403	0.0223	-0.8124
32	SLD 13	0.10078	-0.00182	0.02487	-0.0987	0.0511	0.2386
32	SLD 14	0.10078	-0.00182	0.02487	-0.0987	0.0511	0.2386
32	SLD 15	0.10078	-0.0015	0.02487	0.1039	0.0511	-0.2465
32	SLD 16	0.10078	-0.0015	0.02487	0.1039	0.0511	-0.2465
32	SLV 1	-0.1472	-0.00209	-0.08074	-0.2646	-0.0818	0.6357
32	SLV 2	-0.1472	-0.00209	-0.08074	-0.2646	-0.0818	0.6357
32	SLV 3	-0.1472	-0.00127	-0.08074	0.2699	-0.0818	-0.6436
32	SLV 4	-0.1472	-0.00127	-0.08074	0.2699	-0.0818	-0.6436
32	SLV 5	-0.02729	-0.00304	-0.02967	-0.8882	-0.0175	2.1282
32	SLV 6	-0.02729	-0.00304	-0.02967	-0.8882	-0.0175	2.1282
32	SLV 7	-0.02729	-0.0003	-0.02967	0.8934	-0.0175	-2.1361
32	SLV 8	-0.02729	-0.0003	-0.02967	0.8934	-0.0175	-2.1361
32	SLV 9	0.07549	-0.00304	0.0141	-0.8882	0.0376	2.1282
32	SLV 10	0.07549	-0.00304	0.0141	-0.8882	0.0376	2.1282
32	SLV 11	0.07549	-0.00029	0.0141	0.8934	0.0376	-2.1361
32	SLV 12	0.07549	-0.00029	0.0141	0.8934	0.0376	-2.1361
32	SLV 13	0.19541	-0.00206	0.06517	-0.2647	0.1018	0.6357
32	SLV 14	0.19541	-0.00206	0.06517	-0.2647	0.1018	0.6357
32	SLV 15	0.19541	-0.00124	0.06517	0.2698	0.1018	-0.6436
32	SLV 16	0.19541	-0.00124	0.06517	0.2698	0.1018	-0.6436
33	SLU 1	-0.0241	-0.00059	-0.00778	0.0009	-0.01	0.0014
33	SLU 2	-0.0241	-0.00059	-0.00778	0.001	-0.01	0.0014
33	SLU 3	-0.0241	-0.00059	-0.00778	0.001	-0.01	0.0015

Nodo	Cont.	Spostamento			Rotazione		
Ind.	N.br.	ux	uy	uz	rx	ry	rz
33	SLU 4	-0.0241	-0.00059	-0.00778	0.0009	-0.01	0.0014
33	SLU 5	-0.0241	-0.00059	-0.00778	0.001	-0.01	0.0015
33	SLU 6	-0.02659	-0.00061	-0.00776	0.001	-0.0109	0.0015
33	SLU 7	-0.02659	-0.00061	-0.00776	0.001	-0.0109	0.0015
33	SLU 8	-0.02659	-0.00061	-0.00776	0.001	-0.0109	0.0015
33	SLU 9	-0.02659	-0.00061	-0.00776	0.001	-0.0109	0.0015
33	SLU 10	-0.02909	-0.00063	-0.00774	0.001	-0.0119	0.0015
33	SLU 11	-0.02909	-0.00063	-0.00774	0.001	-0.0119	0.0015
33	SLU 12	-0.02909	-0.00063	-0.00774	0.001	-0.0119	0.0015
33	SLU 13	-0.02909	-0.00063	-0.00774	0.001	-0.0119	0.0015
33	SLU 14	-0.0391	-0.00072	-0.00576	0.0011	-0.0165	0.0015
33	SLU 15	-0.0391	-0.00072	-0.00576	0.0011	-0.0165	0.0016
33	SLU 16	-0.0391	-0.00071	-0.00577	0.001	-0.0165	0.0015
33	SLU 17	-0.0391	-0.00072	-0.00577	0.0011	-0.0165	0.0016
33	SLU 18	-0.0416	-0.00074	-0.00574	0.0011	-0.0174	0.0016
33	SLU 19	-0.0416	-0.00074	-0.00574	0.0011	-0.0174	0.0016
33	SLU 20	-0.0416	-0.00074	-0.00574	0.0011	-0.0174	0.0016
33	SLU 21	-0.0416	-0.00074	-0.00574	0.0011	-0.0174	0.0016
33	SLU 22	-0.04409	-0.00076	-0.00572	0.0011	-0.0184	0.0016
33	SLU 23	-0.04409	-0.00076	-0.00572	0.0011	-0.0184	0.0016
33	SLU 24	-0.04409	-0.00076	-0.00572	0.0011	-0.0184	0.0016
33	SLU 25	-0.04409	-0.00076	-0.00572	0.0011	-0.0184	0.0016
33	SLU 26	-0.06161	-0.0009	-0.00274	0.0012	-0.0263	0.0016
33	SLU 27	-0.06161	-0.0009	-0.00274	0.0012	-0.0263	0.0017
33	SLU 28	-0.06161	-0.0009	-0.00274	0.0012	-0.0263	0.0016
33	SLU 29	-0.06161	-0.0009	-0.00274	0.0012	-0.0263	0.0017
33	SLU 30	-0.0641	-0.00092	-0.00272	0.0012	-0.0272	0.0017
33	SLU 31	-0.0641	-0.00092	-0.00272	0.0013	-0.0272	0.0017
33	SLU 32	-0.0641	-0.00092	-0.00272	0.0012	-0.0272	0.0017
33	SLU 33	-0.0641	-0.00092	-0.00272	0.0013	-0.0272	0.0017
33	SLU 34	-0.0241	-0.00059	-0.00778	0.0009	-0.01	0.0014
33	SLU 35	-0.0241	-0.00059	-0.00778	0.001	-0.01	0.0014
33	SLU 36	-0.0241	-0.00059	-0.00778	0.001	-0.01	0.0015
33	SLU 37	-0.0241	-0.00059	-0.00778	0.0009	-0.01	0.0014
33	SLU 38	-0.0241	-0.00059	-0.00778	0.001	-0.01	0.0015
33	SLU 39	-0.02659	-0.00061	-0.00776	0.001	-0.0109	0.0015
33	SLU 40	-0.02659	-0.00061	-0.00776	0.001	-0.0109	0.0015
33	SLU 41	-0.02659	-0.00061	-0.00776	0.001	-0.0109	0.0015
33	SLU 42	-0.02659	-0.00061	-0.00776	0.001	-0.0109	0.0015
33	SLU 43	-0.02909	-0.00063	-0.00774	0.001	-0.0119	0.0015
33	SLU 44	-0.02909	-0.00063	-0.00774	0.001	-0.0119	0.0015
33	SLU 45	-0.02909	-0.00063	-0.00774	0.001	-0.0119	0.0015
33	SLU 46	-0.02909	-0.00063	-0.00774	0.001	-0.0119	0.0015
33	SLU 47	-0.0391	-0.00072	-0.00576	0.0011	-0.0165	0.0015
33	SLU 48	-0.0391	-0.00072	-0.00576	0.0011	-0.0165	0.0016
33	SLU 49	-0.0391	-0.00071	-0.00577	0.001	-0.0165	0.0015
33	SLU 50	-0.0391	-0.00072	-0.00577	0.0011	-0.0165	0.0016
33	SLU 51	-0.0416	-0.00074	-0.00574	0.0011	-0.0174	0.0016
33	SLU 52	-0.0416	-0.00074	-0.00574	0.0011	-0.0174	0.0016
33	SLU 53	-0.0416	-0.00074	-0.00574	0.0011	-0.0174	0.0016
33	SLU 54	-0.0416	-0.00074	-0.00574	0.0011	-0.0174	0.0016
33	SLU 55	-0.04409	-0.00076	-0.00572	0.0011	-0.0184	0.0016
33	SLU 56	-0.04409	-0.00076	-0.00572	0.0011	-0.0184	0.0016
33	SLU 57	-0.04409	-0.00076	-0.00572	0.0011	-0.0184	0.0016
33	SLU 58	-0.04409	-0.00076	-0.00572	0.0011	-0.0184	0.0016
33	SLU 59	-0.06161	-0.0009	-0.00274	0.0012	-0.0263	0.0016
33	SLU 60	-0.06161	-0.0009	-0.00274	0.0012	-0.0263	0.0017
33	SLU 61	-0.06161	-0.0009	-0.00274	0.0012	-0.0263	0.0016
33	SLU 62	-0.06161	-0.0009	-0.00274	0.0012	-0.0263	0.0017
33	SLU 63	-0.0641	-0.00092	-0.00272	0.0012	-0.0272	0.0017
33	SLU 64	-0.0641	-0.00092	-0.00272	0.0013	-0.0272	0.0017
33	SLU 65	-0.0641	-0.00092	-0.00272	0.0012	-0.0272	0.0017
33	SLU 66	-0.0641	-0.00092	-0.00272	0.0013	-0.0272	0.0017
33	SLU 67	-0.03133	-0.00077	-0.01012	0.0012	-0.013	0.0018
33	SLU 68	-0.03133	-0.00077	-0.01012	0.0012	-0.013	0.0019
33	SLU 69	-0.03133	-0.00077	-0.01012	0.0012	-0.013	0.0019
33	SLU 70	-0.03133	-0.00077	-0.01012	0.0012	-0.013	0.0018
33	SLU 71	-0.03133	-0.00077	-0.01012	0.0012	-0.013	0.0019
33	SLU 72	-0.03382	-0.00079	-0.0101	0.0013	-0.014	0.0019
33	SLU 73	-0.03382	-0.00079	-0.0101	0.0013	-0.014	0.0019
33	SLU 74	-0.03382	-0.00079	-0.0101	0.0012	-0.0139	0.0019
33	SLU 75	-0.03382	-0.00079	-0.0101	0.0013	-0.014	0.0019
33	SLU 76	-0.03632	-0.00081	-0.01008	0.0013	-0.0149	0.0019
33	SLU 77	-0.03632	-0.00081	-0.01008	0.0013	-0.0149	0.0019
33	SLU 78	-0.03632	-0.00081	-0.01008	0.0013	-0.0149	0.0019
33	SLU 79	-0.03632	-0.00081	-0.01008	0.0013	-0.0149	0.002
33	SLU 80	-0.04633	-0.00089	-0.0081	0.0013	-0.0195	0.002
33	SLU 81	-0.04633	-0.00089	-0.0081	0.0014	-0.0195	0.002
33	SLU 82	-0.04633	-0.00089	-0.0081	0.0013	-0.0195	0.0019
33	SLU 83	-0.04633	-0.00089	-0.0081	0.0014	-0.0195	0.002
33	SLU 84	-0.04883	-0.00091	-0.00808	0.0014	-0.0204	0.002
33	SLU 85	-0.04883	-0.00091	-0.00808	0.0014	-0.0204	0.002
33	SLU 86	-0.04883	-0.00091	-0.00808	0.0013	-0.0204	0.002
33	SLU 87	-0.04883	-0.00091	-0.00808	0.0014	-0.0204	0.002
33	SLU 88	-0.05132	-0.00093	-0.00806	0.0014	-0.0214	0.002
33	SLU 89	-0.05132	-0.00093	-0.00806	0.0014	-0.0214	0.002
33	SLU 90	-0.05132	-0.00093	-0.00806	0.0014	-0.0214	0.002
33	SLU 91	-0.05132	-0.00093	-0.00806	0.0014	-0.0214	0.0021
33	SLU 92	-0.06884	-0.00108	-0.00507	0.0015	-0.0293	0.002
33	SLU 93	-0.06884	-0.00108	-0.00507	0.0015	-0.0293	0.0021
33	SLU 94	-0.06884	-0.00108	-0.00507	0.0015	-0.0293	0.0021
33	SLU 95	-0.06884	-0.00108	-0.00507	0.0015	-0.0293	0.0021
33	SLU 96	-0.07133	-0.0011	-0.00505	0.0015	-0.0302	0.0021
33	SLU 97	-0.07133	-0.0011	-0.00505	0.0015	-0.0302	0.0021
33	SLU 98	-0.07133	-0.0011	-0.00505	0.0015	-0.0302	0.0021

Nodo	Cont.	Spostamento			Rotazione		
Ind.	N.br.	ux	uy	uz	rx	ry	rz
33	SLU 99	-0.07133	-0.0011	-0.00505	0.0015	-0.0302	0.0022
33	SLU 100	-0.03133	-0.00077	-0.01012	0.0012	-0.013	0.0018
33	SLU 101	-0.03133	-0.00077	-0.01012	0.0012	-0.013	0.0019
33	SLU 102	-0.03133	-0.00077	-0.01012	0.0012	-0.013	0.0019
33	SLU 103	-0.03133	-0.00077	-0.01012	0.0012	-0.013	0.0018
33	SLU 104	-0.03133	-0.00077	-0.01012	0.0012	-0.013	0.0019
33	SLU 105	-0.03382	-0.00079	-0.0101	0.0013	-0.014	0.0019
33	SLU 106	-0.03382	-0.00079	-0.0101	0.0013	-0.014	0.0019
33	SLU 107	-0.03382	-0.00079	-0.0101	0.0012	-0.0139	0.0019
33	SLU 108	-0.03382	-0.00079	-0.0101	0.0013	-0.014	0.0019
33	SLU 109	-0.03632	-0.00081	-0.01008	0.0013	-0.0149	0.0019
33	SLU 110	-0.03632	-0.00081	-0.01008	0.0013	-0.0149	0.0019
33	SLU 111	-0.03632	-0.00081	-0.01008	0.0013	-0.0149	0.0019
33	SLU 112	-0.03632	-0.00081	-0.01008	0.0013	-0.0149	0.002
33	SLU 113	-0.04633	-0.00089	-0.0081	0.0013	-0.0195	0.002
33	SLU 114	-0.04633	-0.00089	-0.0081	0.0014	-0.0195	0.002
33	SLU 115	-0.04633	-0.00089	-0.0081	0.0013	-0.0195	0.0019
33	SLU 116	-0.04633	-0.00089	-0.0081	0.0014	-0.0195	0.002
33	SLU 117	-0.04883	-0.00091	-0.00808	0.0014	-0.0204	0.002
33	SLU 118	-0.04883	-0.00091	-0.00808	0.0014	-0.0204	0.002
33	SLU 119	-0.04883	-0.00091	-0.00808	0.0013	-0.0204	0.002
33	SLU 120	-0.04883	-0.00091	-0.00808	0.0014	-0.0204	0.002
33	SLU 121	-0.05132	-0.00093	-0.00806	0.0014	-0.0214	0.002
33	SLU 122	-0.05132	-0.00093	-0.00806	0.0014	-0.0214	0.002
33	SLU 123	-0.05132	-0.00093	-0.00806	0.0014	-0.0214	0.002
33	SLU 124	-0.05132	-0.00093	-0.00806	0.0014	-0.0214	0.0021
33	SLU 125	-0.06884	-0.00108	-0.00507	0.0015	-0.0293	0.002
33	SLU 126	-0.06884	-0.00108	-0.00507	0.0015	-0.0293	0.0021
33	SLU 127	-0.06884	-0.00108	-0.00507	0.0015	-0.0293	0.0021
33	SLU 128	-0.06884	-0.00108	-0.00507	0.0015	-0.0293	0.0021
33	SLU 129	-0.07133	-0.0011	-0.00505	0.0015	-0.0302	0.0021
33	SLU 130	-0.07133	-0.0011	-0.00505	0.0015	-0.0302	0.0021
33	SLU 131	-0.07133	-0.0011	-0.00505	0.0015	-0.0302	0.0021
33	SLU 132	-0.07133	-0.0011	-0.00505	0.0015	-0.0302	0.0022
33	SLE RA 1	-0.0241	-0.00059	-0.00778	0.0009	-0.01	0.0014
33	SLE RA 2	-0.0241	-0.00059	-0.00778	0.0009	-0.01	0.0014
33	SLE RA 3	-0.0241	-0.00059	-0.00778	0.001	-0.01	0.0014
33	SLE RA 4	-0.0241	-0.00059	-0.00778	0.0009	-0.01	0.0014
33	SLE RA 5	-0.0241	-0.00059	-0.00778	0.001	-0.01	0.0014
33	SLE RA 6	-0.02576	-0.00061	-0.00777	0.001	-0.0106	0.0015
33	SLE RA 7	-0.02576	-0.00061	-0.00777	0.001	-0.0106	0.0015
33	SLE RA 8	-0.02576	-0.00061	-0.00777	0.0009	-0.0106	0.0014
33	SLE RA 9	-0.02576	-0.00061	-0.00777	0.001	-0.0106	0.0015
33	SLE RA 10	-0.02742	-0.00062	-0.00776	0.001	-0.0113	0.0014
33	SLE RA 11	-0.02743	-0.00062	-0.00776	0.001	-0.0113	0.0015
33	SLE RA 12	-0.02742	-0.00062	-0.00776	0.001	-0.0113	0.0015
33	SLE RA 13	-0.02743	-0.00062	-0.00776	0.001	-0.0113	0.0015
33	SLE RA 14	-0.0341	-0.00067	-0.00644	0.001	-0.0143	0.0015
33	SLE RA 15	-0.0341	-0.00067	-0.00644	0.001	-0.0143	0.0015
33	SLE RA 16	-0.0341	-0.00067	-0.00644	0.001	-0.0143	0.0015
33	SLE RA 17	-0.0341	-0.00067	-0.00644	0.001	-0.0143	0.0015
33	SLE RA 18	-0.03577	-0.00069	-0.00642	0.001	-0.015	0.0015
33	SLE RA 19	-0.03577	-0.00069	-0.00642	0.001	-0.015	0.0015
33	SLE RA 20	-0.03576	-0.00069	-0.00642	0.001	-0.015	0.0015
33	SLE RA 21	-0.03576	-0.00069	-0.00642	0.001	-0.015	0.0015
33	SLE RA 22	-0.03743	-0.0007	-0.00641	0.001	-0.0156	0.0015
33	SLE RA 23	-0.03743	-0.0007	-0.00641	0.0011	-0.0156	0.0015
33	SLE RA 24	-0.03743	-0.0007	-0.00641	0.001	-0.0156	0.0015
33	SLE RA 25	-0.03743	-0.0007	-0.00641	0.0011	-0.0156	0.0016
33	SLE RA 26	-0.0491	-0.0008	-0.00442	0.0011	-0.0208	0.0015
33	SLE RA 27	-0.04911	-0.0008	-0.00442	0.0011	-0.0208	0.0016
33	SLE RA 28	-0.0491	-0.0008	-0.00442	0.0011	-0.0208	0.0016
33	SLE RA 29	-0.04911	-0.0008	-0.00442	0.0011	-0.0208	0.0016
33	SLE RA 30	-0.05077	-0.00081	-0.00441	0.0011	-0.0215	0.0016
33	SLE RA 31	-0.05077	-0.00081	-0.00441	0.0011	-0.0215	0.0016
33	SLE RA 32	-0.05077	-0.00081	-0.00441	0.0011	-0.0215	0.0016
33	SLE RA 33	-0.05077	-0.00081	-0.00441	0.0011	-0.0215	0.0016
33	SLE FR 1	-0.0241	-0.00059	-0.00778	0.0009	-0.01	0.0014
33	SLE FR 2	-0.0241	-0.00059	-0.00778	0.0009	-0.01	0.0014
33	SLE FR 3	-0.0241	-0.00059	-0.00778	0.0009	-0.01	0.0014
33	SLE FR 4	-0.02476	-0.0006	-0.00778	0.0009	-0.0103	0.0014
33	SLE FR 5	-0.0341	-0.00067	-0.00644	0.001	-0.0143	0.0014
33	SLE QP 1	-0.0241	-0.00059	-0.00778	0.0009	-0.01	0.0014
33	SLO 1	-0.11746	-0.00076	0.03198	-0.1088	-0.06	-0.2611
33	SLO 2	-0.11746	-0.00076	0.03198	-0.1088	-0.06	-0.2611
33	SLO 3	-0.11746	-0.00042	0.03198	0.1105	-0.06	0.2638
33	SLO 4	-0.11746	-0.00042	0.03198	0.1105	-0.06	0.2638
33	SLO 5	-0.05211	-0.00117	0.00414	-0.3646	-0.025	-0.8735
33	SLO 6	-0.05211	-0.00117	0.00414	-0.3646	-0.025	-0.8735
33	SLO 7	-0.05211	-0.00002	0.00414	0.3664	-0.025	0.8762
33	SLO 8	-0.05211	-0.00002	0.00414	0.3664	-0.025	0.8762
33	SLO 9	0.00391	-0.00117	-0.01971	-0.3646	0.005	-0.8734
33	SLO 10	0.00391	-0.00117	-0.01971	-0.3646	0.005	-0.8734
33	SLO 11	0.00391	-0.00002	-0.01971	0.3664	0.005	0.8762
33	SLO 12	0.00391	-0.00002	-0.01971	0.3664	0.005	0.8762
33	SLO 13	0.06926	-0.00077	-0.04754	-0.1087	0.04	-0.261
33	SLO 14	0.06926	-0.00077	-0.04754	-0.1087	0.04	-0.261
33	SLO 15	0.06926	-0.00042	-0.04754	0.1106	0.04	0.2639
33	SLO 16	0.06926	-0.00042	-0.04754	0.1106	0.04	0.2639
33	SLD 1	-0.1007	-0.00075	0.02484	-0.1004	-0.0511	-0.2412
33	SLD 2	-0.1007	-0.00075	0.02484	-0.1004	-0.0511	-0.2412
33	SLD 3	-0.1007	-0.00043	0.02484	0.1022	-0.0511	0.2439
33	SLD 4	-0.1007	-0.00043	0.02484	0.1022	-0.0511	0.2439
33	SLD 5	-0.04708	-0.00112	0.002	-0.3368	-0.0223	-0.807
33	SLD 6	-0.04708	-0.00112	0.002	-0.3368	-0.0223	-0.807

Nodo	Cont.	Spostamento			Rotazione		
Ind.	N.br.	ux	uy	uz	rx	ry	rz
33	SLD 7	-0.04708	-0.00006	0.002	0.3386	-0.0223	0.8097
33	SLD 8	-0.04708	-0.00006	0.002	0.3386	-0.0223	0.8097
33	SLD 9	-0.00112	-0.00112	-0.01757	-0.3368	0.0023	-0.8069
33	SLD 10	-0.00112	-0.00112	-0.01757	-0.3368	0.0023	-0.8069
33	SLD 11	-0.00112	-0.00006	-0.01757	0.3386	0.0023	0.8097
33	SLD 12	-0.00112	-0.00006	-0.01757	0.3386	0.0023	0.8097
33	SLD 13	0.05251	-0.00075	-0.04041	-0.1004	0.031	-0.2411
33	SLD 14	0.05251	-0.00075	-0.04041	-0.1004	0.031	-0.2411
33	SLD 15	0.05251	-0.00044	-0.04041	0.1023	0.031	0.2439
33	SLD 16	0.05251	-0.00044	-0.04041	0.1023	0.031	0.2439
33	SLV 1	-0.19523	-0.00101	0.0651	-0.2664	-0.1017	-0.6383
33	SLV 2	-0.19523	-0.00101	0.0651	-0.2664	-0.1017	-0.6383
33	SLV 3	-0.19523	-0.00017	0.0651	0.2681	-0.1017	0.6409
33	SLV 4	-0.19523	-0.00017	0.0651	0.2681	-0.1017	0.6409
33	SLV 5	-0.07544	-0.00199	0.01408	-0.8898	-0.0375	-2.1306
33	SLV 6	-0.07544	-0.00199	0.01408	-0.8898	-0.0375	-2.1306
33	SLV 7	-0.07544	0.00081	0.01408	0.8916	-0.0375	2.1334
33	SLV 8	-0.07544	0.00081	0.01408	0.8916	-0.0375	2.1334
33	SLV 9	0.02724	-0.002	-0.02965	-0.8898	0.0175	-2.1306
33	SLV 10	0.02724	-0.002	-0.02965	-0.8898	0.0175	-2.1306
33	SLV 11	0.02724	0.00081	-0.02965	0.8917	0.0175	2.1334
33	SLV 12	0.02724	0.00081	-0.02965	0.8917	0.0175	2.1334
33	SLV 13	0.14704	-0.00102	-0.08067	-0.2662	0.0817	-0.6382
33	SLV 14	0.14704	-0.00102	-0.08067	-0.2662	0.0817	-0.6382
33	SLV 15	0.14704	-0.00018	-0.08067	0.2682	0.0817	0.6411
33	SLV 16	0.14704	-0.00018	-0.08067	0.2682	0.0817	0.6411
34	SLU 1	-0.01305	-0.00057	0.02725	0.0007	-0.0091	0
34	SLU 2	-0.01305	-0.00057	0.02726	0.0009	-0.0091	0
34	SLU 3	-0.01305	-0.00057	0.02726	0.0009	-0.0091	0
34	SLU 4	-0.01305	-0.00057	0.02725	0.0007	-0.0091	0
34	SLU 5	-0.01305	-0.00057	0.02726	0.0009	-0.0091	0
34	SLU 6	-0.01445	-0.00058	0.03056	0.001	-0.01	0
34	SLU 7	-0.01445	-0.00058	0.03056	0.001	-0.01	0
34	SLU 8	-0.01445	-0.00059	0.03056	0.0008	-0.01	0
34	SLU 9	-0.01445	-0.00059	0.03056	0.0009	-0.01	0
34	SLU 10	-0.01585	-0.00061	0.03386	0.0008	-0.011	0
34	SLU 11	-0.01585	-0.00061	0.03386	0.001	-0.011	0
34	SLU 12	-0.01585	-0.00061	0.03386	0.0008	-0.011	0
34	SLU 13	-0.01585	-0.0006	0.03386	0.001	-0.011	0
34	SLU 14	-0.02209	-0.00068	0.04996	0.0013	-0.015	0
34	SLU 15	-0.02209	-0.00068	0.04996	0.0013	-0.015	0
34	SLU 16	-0.02209	-0.00068	0.04995	0.0011	-0.015	0
34	SLU 17	-0.02209	-0.00068	0.04996	0.0013	-0.015	0
34	SLU 18	-0.0235	-0.0007	0.05326	0.0014	-0.016	0
34	SLU 19	-0.0235	-0.0007	0.05326	0.0014	-0.016	0
34	SLU 20	-0.02349	-0.0007	0.05326	0.0012	-0.016	0
34	SLU 21	-0.0235	-0.0007	0.05326	0.0013	-0.016	0
34	SLU 22	-0.0249	-0.00072	0.05656	0.0012	-0.017	0
34	SLU 23	-0.0249	-0.00072	0.05656	0.0014	-0.017	0
34	SLU 24	-0.0249	-0.00072	0.05656	0.0012	-0.017	0
34	SLU 25	-0.0249	-0.00072	0.05656	0.0014	-0.017	0
34	SLU 26	-0.03566	-0.00085	0.08401	0.0017	-0.024	0
34	SLU 27	-0.03566	-0.00085	0.08401	0.0018	-0.024	0
34	SLU 28	-0.03566	-0.00085	0.08401	0.0017	-0.024	0
34	SLU 29	-0.03566	-0.00085	0.08401	0.0018	-0.024	0
34	SLU 30	-0.03706	-0.00087	0.08731	0.0017	-0.025	0
34	SLU 31	-0.03706	-0.00087	0.08731	0.0019	-0.025	0
34	SLU 32	-0.03706	-0.00087	0.08731	0.0017	-0.025	0
34	SLU 33	-0.03706	-0.00087	0.08731	0.0019	-0.025	0
34	SLU 34	-0.01305	-0.00057	0.02725	0.0007	-0.0091	0
34	SLU 35	-0.01305	-0.00057	0.02726	0.0009	-0.0091	0
34	SLU 36	-0.01305	-0.00057	0.02726	0.0009	-0.0091	0
34	SLU 37	-0.01305	-0.00057	0.02725	0.0007	-0.0091	0
34	SLU 38	-0.01305	-0.00057	0.02726	0.0009	-0.0091	0
34	SLU 39	-0.01445	-0.00058	0.03056	0.001	-0.01	0
34	SLU 40	-0.01445	-0.00058	0.03056	0.001	-0.01	0
34	SLU 41	-0.01445	-0.00059	0.03056	0.0008	-0.01	0
34	SLU 42	-0.01445	-0.00059	0.03056	0.0009	-0.01	0
34	SLU 43	-0.01585	-0.00061	0.03386	0.0008	-0.011	0
34	SLU 44	-0.01585	-0.00061	0.03386	0.001	-0.011	0
34	SLU 45	-0.01585	-0.00061	0.03386	0.0008	-0.011	0
34	SLU 46	-0.01585	-0.0006	0.03386	0.001	-0.011	0
34	SLU 47	-0.02209	-0.00068	0.04996	0.0013	-0.015	0
34	SLU 48	-0.02209	-0.00068	0.04996	0.0013	-0.015	0
34	SLU 49	-0.02209	-0.00068	0.04995	0.0011	-0.015	0
34	SLU 50	-0.02209	-0.00068	0.04996	0.0013	-0.015	0
34	SLU 51	-0.0235	-0.0007	0.05326	0.0014	-0.016	0
34	SLU 52	-0.0235	-0.0007	0.05326	0.0014	-0.016	0
34	SLU 53	-0.02349	-0.0007	0.05326	0.0012	-0.016	0
34	SLU 54	-0.0235	-0.0007	0.05326	0.0013	-0.016	0
34	SLU 55	-0.0249	-0.00072	0.05656	0.0012	-0.017	0
34	SLU 56	-0.0249	-0.00072	0.05656	0.0014	-0.017	0
34	SLU 57	-0.0249	-0.00072	0.05656	0.0012	-0.017	0
34	SLU 58	-0.0249	-0.00072	0.05656	0.0014	-0.017	0
34	SLU 59	-0.03566	-0.00085	0.08401	0.0017	-0.024	0
34	SLU 60	-0.03566	-0.00085	0.08401	0.0018	-0.024	0
34	SLU 61	-0.03566	-0.00085	0.08401	0.0017	-0.024	0
34	SLU 62	-0.03566	-0.00085	0.08401	0.0018	-0.024	0
34	SLU 63	-0.03706	-0.00087	0.08731	0.0017	-0.025	0
34	SLU 64	-0.03706	-0.00087	0.08731	0.0019	-0.025	0
34	SLU 65	-0.03706	-0.00087	0.08731	0.0017	-0.025	0
34	SLU 66	-0.03706	-0.00087	0.08731	0.0019	-0.025	0
34	SLU 67	-0.01696	-0.00074	0.03543	0.0009	-0.0118	0
34	SLU 68	-0.01696	-0.00074	0.03543	0.0012	-0.0118	0
34	SLU 69	-0.01696	-0.00074	0.03543	0.0012	-0.0118	0

Nodo	Cont.	Spostamento			Rotazione		
Ind.	N.br.	ux	uy	uz	rx	ry	rz
34	SLU 70	-0.01696	-0.00074	0.03543	0.0009	-0.0118	0
34	SLU 71	-0.01696	-0.00074	0.03543	0.0011	-0.0118	0
34	SLU 72	-0.01837	-0.00076	0.03874	0.0012	-0.0128	0
34	SLU 73	-0.01837	-0.00076	0.03874	0.0012	-0.0128	0
34	SLU 74	-0.01836	-0.00076	0.03873	0.001	-0.0128	0
34	SLU 75	-0.01836	-0.00076	0.03874	0.0012	-0.0128	0
34	SLU 76	-0.01977	-0.00078	0.04204	0.001	-0.0137	0
34	SLU 77	-0.01977	-0.00078	0.04204	0.0012	-0.0137	0
34	SLU 78	-0.01977	-0.00078	0.04204	0.001	-0.0137	0
34	SLU 79	-0.01977	-0.00078	0.04204	0.0012	-0.0137	0
34	SLU 80	-0.02601	-0.00085	0.05813	0.0015	-0.0178	0
34	SLU 81	-0.02601	-0.00085	0.05813	0.0015	-0.0178	0
34	SLU 82	-0.02601	-0.00085	0.05813	0.0013	-0.0178	0
34	SLU 83	-0.02601	-0.00085	0.05813	0.0015	-0.0178	0
34	SLU 84	-0.02741	-0.00087	0.06144	0.0016	-0.0187	0
34	SLU 85	-0.02741	-0.00087	0.06144	0.0016	-0.0187	0
34	SLU 86	-0.02741	-0.00087	0.06143	0.0014	-0.0187	0
34	SLU 87	-0.02741	-0.00087	0.06144	0.0015	-0.0187	0
34	SLU 88	-0.02881	-0.00089	0.06474	0.0014	-0.0197	0
34	SLU 89	-0.02881	-0.00089	0.06474	0.0016	-0.0197	0
34	SLU 90	-0.02881	-0.00089	0.06474	0.0014	-0.0197	0
34	SLU 91	-0.02881	-0.00089	0.06474	0.0016	-0.0197	0
34	SLU 92	-0.03958	-0.00103	0.09218	0.0019	-0.0267	0
34	SLU 93	-0.03958	-0.00102	0.09219	0.002	-0.0267	0
34	SLU 94	-0.03958	-0.00102	0.09218	0.0019	-0.0267	0
34	SLU 95	-0.03958	-0.00102	0.09219	0.002	-0.0267	0
34	SLU 96	-0.04098	-0.00104	0.09549	0.0019	-0.0277	0
34	SLU 97	-0.04098	-0.00104	0.09549	0.0021	-0.0277	0
34	SLU 98	-0.04098	-0.00104	0.09549	0.0019	-0.0277	0
34	SLU 99	-0.04098	-0.00104	0.09549	0.0021	-0.0277	0
34	SLU 100	-0.01696	-0.00074	0.03543	0.0009	-0.0118	0
34	SLU 101	-0.01696	-0.00074	0.03543	0.0012	-0.0118	0
34	SLU 102	-0.01696	-0.00074	0.03543	0.0012	-0.0118	0
34	SLU 103	-0.01696	-0.00074	0.03543	0.0009	-0.0118	0
34	SLU 104	-0.01696	-0.00074	0.03543	0.0011	-0.0118	0
34	SLU 105	-0.01837	-0.00076	0.03874	0.0012	-0.0128	0
34	SLU 106	-0.01837	-0.00076	0.03874	0.0012	-0.0128	0
34	SLU 107	-0.01836	-0.00076	0.03873	0.001	-0.0128	0
34	SLU 108	-0.01836	-0.00076	0.03874	0.0012	-0.0128	0
34	SLU 109	-0.01977	-0.00078	0.04204	0.001	-0.0137	0
34	SLU 110	-0.01977	-0.00078	0.04204	0.0012	-0.0137	0
34	SLU 111	-0.01977	-0.00078	0.04204	0.001	-0.0137	0
34	SLU 112	-0.01977	-0.00078	0.04204	0.0012	-0.0137	0
34	SLU 113	-0.02601	-0.00085	0.05813	0.0015	-0.0178	0
34	SLU 114	-0.02601	-0.00085	0.05813	0.0015	-0.0178	0
34	SLU 115	-0.02601	-0.00085	0.05813	0.0013	-0.0178	0
34	SLU 116	-0.02601	-0.00085	0.05813	0.0015	-0.0178	0
34	SLU 117	-0.02741	-0.00087	0.06144	0.0016	-0.0187	0
34	SLU 118	-0.02741	-0.00087	0.06144	0.0016	-0.0187	0
34	SLU 119	-0.02741	-0.00087	0.06143	0.0014	-0.0187	0
34	SLU 120	-0.02741	-0.00087	0.06144	0.0015	-0.0187	0
34	SLU 121	-0.02881	-0.00089	0.06474	0.0014	-0.0197	0
34	SLU 122	-0.02881	-0.00089	0.06474	0.0016	-0.0197	0
34	SLU 123	-0.02881	-0.00089	0.06474	0.0014	-0.0197	0
34	SLU 124	-0.02881	-0.00089	0.06474	0.0016	-0.0197	0
34	SLU 125	-0.03958	-0.00103	0.09218	0.0019	-0.0267	0
34	SLU 126	-0.03958	-0.00102	0.09219	0.002	-0.0267	0
34	SLU 127	-0.03958	-0.00102	0.09218	0.0019	-0.0267	0
34	SLU 128	-0.03958	-0.00102	0.09219	0.002	-0.0267	0
34	SLU 129	-0.04098	-0.00104	0.09549	0.0019	-0.0277	0
34	SLU 130	-0.04098	-0.00104	0.09549	0.0021	-0.0277	0
34	SLU 131	-0.04098	-0.00104	0.09549	0.0019	-0.0277	0
34	SLU 132	-0.04098	-0.00104	0.09549	0.0021	-0.0277	0
34	SLE RA 1	-0.01305	-0.00057	0.02725	0.0007	-0.0091	0
34	SLE RA 2	-0.01305	-0.00057	0.02726	0.0009	-0.0091	0
34	SLE RA 3	-0.01305	-0.00057	0.02726	0.0009	-0.0091	0
34	SLE RA 4	-0.01305	-0.00057	0.02725	0.0007	-0.0091	0
34	SLE RA 5	-0.01305	-0.00057	0.02725	0.0008	-0.0091	0
34	SLE RA 6	-0.01398	-0.00058	0.02946	0.0009	-0.0097	0
34	SLE RA 7	-0.01398	-0.00058	0.02946	0.0009	-0.0097	0
34	SLE RA 8	-0.01398	-0.00058	0.02945	0.0008	-0.0097	0
34	SLE RA 9	-0.01398	-0.00058	0.02946	0.0009	-0.0097	0
34	SLE RA 10	-0.01492	-0.0006	0.03166	0.0008	-0.0104	0
34	SLE RA 11	-0.01492	-0.00059	0.03166	0.0009	-0.0104	0
34	SLE RA 12	-0.01492	-0.0006	0.03166	0.0008	-0.0104	0
34	SLE RA 13	-0.01492	-0.00059	0.03166	0.0009	-0.0104	0
34	SLE RA 14	-0.01908	-0.00064	0.04239	0.0011	-0.0131	0
34	SLE RA 15	-0.01908	-0.00064	0.04239	0.0011	-0.0131	0
34	SLE RA 16	-0.01908	-0.00065	0.04239	0.001	-0.0131	0
34	SLE RA 17	-0.01908	-0.00064	0.04239	0.0011	-0.0131	0
34	SLE RA 18	-0.02001	-0.00066	0.04459	0.0012	-0.0137	0
34	SLE RA 19	-0.02001	-0.00066	0.04459	0.0012	-0.0137	0
34	SLE RA 20	-0.02001	-0.00066	0.04459	0.001	-0.0137	0
34	SLE RA 21	-0.02001	-0.00066	0.04459	0.0011	-0.0137	0
34	SLE RA 22	-0.02095	-0.00067	0.04679	0.001	-0.0144	0
34	SLE RA 23	-0.02095	-0.00067	0.04679	0.0012	-0.0144	0
34	SLE RA 24	-0.02095	-0.00067	0.04679	0.001	-0.0144	0
34	SLE RA 25	-0.02095	-0.00067	0.04679	0.0012	-0.0144	0
34	SLE RA 26	-0.02812	-0.00076	0.06509	0.0013	-0.019	0
34	SLE RA 27	-0.02812	-0.00076	0.06509	0.0015	-0.019	0
34	SLE RA 28	-0.02812	-0.00076	0.06509	0.0013	-0.019	0
34	SLE RA 29	-0.02812	-0.00076	0.06509	0.0015	-0.019	0
34	SLE RA 30	-0.02906	-0.00077	0.06729	0.0014	-0.0197	0
34	SLE RA 31	-0.02906	-0.00077	0.06729	0.0015	-0.0197	0
34	SLE RA 32	-0.02906	-0.00077	0.06729	0.0014	-0.0197	0

Nodo	Cont.	Spostamento			Rotazione		
Ind.	N.br.	ux	uy	uz	rx	ry	rz
34	SLE RA 33	-0.02906	-0.00077	0.06729	0.0015	-0.0197	0
34	SLE FR 1	-0.01305	-0.00057	0.02725	0.0007	-0.0091	0
34	SLE FR 2	-0.01305	-0.00057	0.02725	0.0008	-0.0091	0
34	SLE FR 3	-0.01305	-0.00057	0.02725	0.0007	-0.0091	0
34	SLE FR 4	-0.01342	-0.00057	0.02813	0.0007	-0.0093	0
34	SLE FR 5	-0.01908	-0.00065	0.04239	0.001	-0.0131	0
34	SLE QP 1	-0.01305	-0.00057	0.02725	0.0007	-0.0091	0
34	SLO 1	-0.10379	-0.00431	0.19024	-0.0309	-0.0019	-0.0012
34	SLO 2	-0.10379	-0.00431	0.19024	-0.0309	-0.0019	-0.0012
34	SLO 3	-0.10379	0.00317	0.19024	0.0341	-0.0019	0.0012
34	SLO 4	-0.10379	0.00317	0.19024	0.0341	-0.0019	0.0012
34	SLO 5	-0.04027	-0.01303	0.07615	-0.1075	-0.0069	-0.0041
34	SLO 6	-0.04027	-0.01303	0.07615	-0.1075	-0.0069	-0.0041
34	SLO 7	-0.04027	0.01189	0.07615	0.1094	-0.0069	0.0041
34	SLO 8	-0.04027	0.01189	0.07615	0.1094	-0.0069	0.0041
34	SLO 9	0.01418	-0.01303	-0.02164	-0.108	-0.0112	-0.0041
34	SLO 10	0.01418	-0.01303	-0.02164	-0.108	-0.0112	-0.0041
34	SLO 11	0.01418	0.01189	-0.02164	0.1089	-0.0112	0.0041
34	SLO 12	0.01418	0.01189	-0.02164	0.1089	-0.0112	0.0041
34	SLO 13	0.0777	-0.00431	-0.13573	-0.0327	-0.0162	-0.0012
34	SLO 14	0.0777	-0.00431	-0.13573	-0.0327	-0.0162	-0.0012
34	SLO 15	0.0777	0.00317	-0.13573	0.0324	-0.0162	0.0012
34	SLO 16	0.0777	0.00317	-0.13573	0.0324	-0.0162	0.0012
34	SLD 1	-0.08751	-0.00402	0.16099	-0.0286	-0.0032	-0.0011
34	SLD 2	-0.08751	-0.00402	0.16099	-0.0286	-0.0032	-0.0011
34	SLD 3	-0.08751	0.00289	0.16099	0.0315	-0.0032	0.0012
34	SLD 4	-0.08751	0.00289	0.16099	0.0315	-0.0032	0.0012
34	SLD 5	-0.03539	-0.01208	0.06737	-0.0993	-0.0073	-0.0038
34	SLD 6	-0.03539	-0.01208	0.06737	-0.0993	-0.0073	-0.0038
34	SLD 7	-0.03538	0.01094	0.06737	0.1011	-0.0073	0.0038
34	SLD 8	-0.03538	0.01094	0.06737	0.1011	-0.0073	0.0038
34	SLD 9	0.00929	-0.01208	-0.01287	-0.0997	-0.0108	-0.0038
34	SLD 10	0.00929	-0.01208	-0.01287	-0.0997	-0.0108	-0.0038
34	SLD 11	0.00929	0.01094	-0.01287	0.1007	-0.0108	0.0038
34	SLD 12	0.00929	0.01094	-0.01287	0.1007	-0.0108	0.0038
34	SLD 13	0.06141	-0.00403	-0.10648	-0.03	-0.0149	-0.0011
34	SLD 14	0.06141	-0.00403	-0.10648	-0.03	-0.0149	-0.0011
34	SLD 15	0.06141	0.00288	-0.10648	0.0301	-0.0149	0.0012
34	SLD 16	0.06141	0.00288	-0.10648	0.0301	-0.0149	0.0012
34	SLV 1	-0.17939	-0.00968	0.32602	-0.077	0.004	-0.003
34	SLV 2	-0.17939	-0.00968	0.32602	-0.077	0.004	-0.003
34	SLV 3	-0.17939	0.00854	0.32602	0.0816	0.004	0.003
34	SLV 4	-0.17939	0.00854	0.32602	0.0816	0.004	0.003
34	SLV 5	-0.06295	-0.03094	0.11688	-0.2631	-0.0052	-0.01
34	SLV 6	-0.06295	-0.03094	0.11688	-0.2631	-0.0052	-0.01
34	SLV 7	-0.06295	0.0298	0.11688	0.2655	-0.0052	0.0101
34	SLV 8	-0.06295	0.0298	0.11688	0.2655	-0.0052	0.0101
34	SLV 9	0.03685	-0.03094	-0.06238	-0.2641	-0.013	-0.01
34	SLV 10	0.03685	-0.03094	-0.06238	-0.2641	-0.013	-0.01
34	SLV 11	0.03685	0.0298	-0.06238	0.2646	-0.013	0.0101
34	SLV 12	0.03685	0.0298	-0.06238	0.2646	-0.013	0.0101
34	SLV 13	0.15329	-0.00968	-0.27151	-0.0802	-0.0222	-0.003
34	SLV 14	0.15329	-0.00968	-0.27151	-0.0802	-0.0222	-0.003
34	SLV 15	0.15329	0.00854	-0.27151	0.0784	-0.0222	0.003
34	SLV 16	0.15329	0.00854	-0.27151	0.0784	-0.0222	0.003
35	SLU 1	0.01305	-0.00057	0.02725	0.0007	0.0091	0
35	SLU 2	0.01305	-0.00057	0.02726	0.0009	0.0091	0
35	SLU 3	0.01305	-0.00057	0.02726	0.0009	0.0091	0
35	SLU 4	0.01305	-0.00057	0.02725	0.0007	0.0091	0
35	SLU 5	0.01305	-0.00057	0.02726	0.0009	0.0091	0
35	SLU 6	0.01458	-0.00058	0.0308	0.001	0.01	0
35	SLU 7	0.01458	-0.00058	0.0308	0.001	0.01	0
35	SLU 8	0.01458	-0.00059	0.03079	0.0008	0.01	0
35	SLU 9	0.01458	-0.00059	0.0308	0.0009	0.01	0
35	SLU 10	0.01611	-0.00061	0.03433	0.0008	0.011	0
35	SLU 11	0.01611	-0.00061	0.03434	0.001	0.011	0
35	SLU 12	0.01611	-0.00061	0.03433	0.0008	0.011	0
35	SLU 13	0.01611	-0.0006	0.03434	0.001	0.011	0
35	SLU 14	0.02231	-0.00068	0.05035	0.0013	0.015	0
35	SLU 15	0.02231	-0.00068	0.05035	0.0013	0.015	0
35	SLU 16	0.02231	-0.00068	0.05035	0.0011	0.015	0
35	SLU 17	0.02231	-0.00068	0.05035	0.0013	0.015	0
35	SLU 18	0.02385	-0.0007	0.05389	0.0014	0.016	0
35	SLU 19	0.02385	-0.0007	0.05389	0.0014	0.016	0
35	SLU 20	0.02384	-0.0007	0.05389	0.0012	0.016	0
35	SLU 21	0.02385	-0.0007	0.05389	0.0013	0.016	0
35	SLU 22	0.02538	-0.00072	0.05743	0.0012	0.0169	0
35	SLU 23	0.02538	-0.00072	0.05743	0.0014	0.0169	0
35	SLU 24	0.02538	-0.00072	0.05743	0.0012	0.0169	0
35	SLU 25	0.02538	-0.00072	0.05743	0.0014	0.0169	0
35	SLU 26	0.03621	-0.00085	0.08499	0.0017	0.024	0
35	SLU 27	0.03621	-0.00085	0.085	0.0018	0.024	0
35	SLU 28	0.03621	-0.00085	0.08499	0.0017	0.024	0
35	SLU 29	0.03621	-0.00085	0.085	0.0018	0.024	0
35	SLU 30	0.03774	-0.00087	0.08853	0.0017	0.0249	0
35	SLU 31	0.03774	-0.00087	0.08854	0.0019	0.0249	0
35	SLU 32	0.03774	-0.00087	0.08853	0.0017	0.0249	0
35	SLU 33	0.03774	-0.00087	0.08854	0.0019	0.0249	0
35	SLU 34	0.01305	-0.00057	0.02725	0.0007	0.0091	0
35	SLU 35	0.01305	-0.00057	0.02726	0.0009	0.0091	0
35	SLU 36	0.01305	-0.00057	0.02726	0.0009	0.0091	0
35	SLU 37	0.01305	-0.00057	0.02725	0.0007	0.0091	0
35	SLU 38	0.01305	-0.00057	0.02726	0.0009	0.0091	0
35	SLU 39	0.01458	-0.00058	0.0308	0.001	0.01	0
35	SLU 40	0.01458	-0.00058	0.0308	0.001	0.01	0

Nodo	Cont.	Spostamento			Rotazione		
Ind.	N.br.	ux	uy	uz	rx	ry	rz
35	SLU 41	0.01458	-0.00059	0.03079	0.0008	0.01	0
35	SLU 42	0.01458	-0.00059	0.0308	0.0009	0.01	0
35	SLU 43	0.01611	-0.00061	0.03433	0.0008	0.011	0
35	SLU 44	0.01611	-0.00061	0.03434	0.001	0.011	0
35	SLU 45	0.01611	-0.00061	0.03433	0.0008	0.011	0
35	SLU 46	0.01611	-0.0006	0.03434	0.001	0.011	0
35	SLU 47	0.02231	-0.00068	0.05035	0.0013	0.015	0
35	SLU 48	0.02231	-0.00068	0.05035	0.0013	0.015	0
35	SLU 49	0.02231	-0.00068	0.05035	0.0011	0.015	0
35	SLU 50	0.02231	-0.00068	0.05035	0.0013	0.015	0
35	SLU 51	0.02385	-0.0007	0.05389	0.0014	0.016	0
35	SLU 52	0.02385	-0.0007	0.05389	0.0014	0.016	0
35	SLU 53	0.02384	-0.0007	0.05389	0.0012	0.016	0
35	SLU 54	0.02385	-0.0007	0.05389	0.0013	0.016	0
35	SLU 55	0.02538	-0.00072	0.05743	0.0012	0.0169	0
35	SLU 56	0.02538	-0.00072	0.05743	0.0014	0.0169	0
35	SLU 57	0.02538	-0.00072	0.05743	0.0012	0.0169	0
35	SLU 58	0.02538	-0.00072	0.05743	0.0014	0.0169	0
35	SLU 59	0.03621	-0.00085	0.08499	0.0017	0.024	0
35	SLU 60	0.03621	-0.00085	0.085	0.0018	0.024	0
35	SLU 61	0.03621	-0.00085	0.08499	0.0017	0.024	0
35	SLU 62	0.03621	-0.00085	0.085	0.0018	0.024	0
35	SLU 63	0.03774	-0.00087	0.08853	0.0017	0.0249	0
35	SLU 64	0.03774	-0.00087	0.08854	0.0019	0.0249	0
35	SLU 65	0.03774	-0.00087	0.08853	0.0017	0.0249	0
35	SLU 66	0.03774	-0.00087	0.08854	0.0019	0.0249	0
35	SLU 67	0.01696	-0.00074	0.03543	0.0009	0.0118	0
35	SLU 68	0.01696	-0.00074	0.03543	0.0012	0.0118	0
35	SLU 69	0.01696	-0.00074	0.03543	0.0012	0.0118	0
35	SLU 70	0.01696	-0.00074	0.03543	0.0009	0.0118	0
35	SLU 71	0.01696	-0.00074	0.03543	0.0011	0.0118	0
35	SLU 72	0.0185	-0.00076	0.03897	0.0012	0.0128	0
35	SLU 73	0.0185	-0.00076	0.03897	0.0012	0.0128	0
35	SLU 74	0.01849	-0.00076	0.03897	0.001	0.0128	0
35	SLU 75	0.0185	-0.00076	0.03897	0.0012	0.0128	0
35	SLU 76	0.02003	-0.00078	0.04251	0.001	0.0137	0
35	SLU 77	0.02003	-0.00078	0.04251	0.0012	0.0137	0
35	SLU 78	0.02003	-0.00078	0.04251	0.001	0.0137	0
35	SLU 79	0.02003	-0.00078	0.04251	0.0012	0.0137	0
35	SLU 80	0.02623	-0.00085	0.05853	0.0015	0.0178	0
35	SLU 81	0.02623	-0.00085	0.05853	0.0015	0.0178	0
35	SLU 82	0.02623	-0.00085	0.05852	0.0013	0.0178	0
35	SLU 83	0.02623	-0.00085	0.05853	0.0015	0.0178	0
35	SLU 84	0.02776	-0.00087	0.06207	0.0016	0.0187	0
35	SLU 85	0.02776	-0.00087	0.06207	0.0016	0.0187	0
35	SLU 86	0.02776	-0.00087	0.06207	0.0014	0.0187	0
35	SLU 87	0.02776	-0.00087	0.06207	0.0015	0.0187	0
35	SLU 88	0.02929	-0.00089	0.06561	0.0014	0.0197	0
35	SLU 89	0.02929	-0.00089	0.06561	0.0016	0.0197	0
35	SLU 90	0.02929	-0.00089	0.06561	0.0014	0.0197	0
35	SLU 91	0.02929	-0.00089	0.06561	0.0016	0.0197	0
35	SLU 92	0.04012	-0.00103	0.09317	0.0019	0.0267	0
35	SLU 93	0.04012	-0.00102	0.09317	0.002	0.0267	0
35	SLU 94	0.04012	-0.00102	0.09317	0.0019	0.0267	0
35	SLU 95	0.04012	-0.00102	0.09317	0.002	0.0267	0
35	SLU 96	0.04165	-0.00104	0.09671	0.0019	0.0276	0
35	SLU 97	0.04166	-0.00104	0.09671	0.0021	0.0276	0
35	SLU 98	0.04165	-0.00104	0.09671	0.0019	0.0276	0
35	SLU 99	0.04166	-0.00104	0.09671	0.0021	0.0276	0
35	SLU 100	0.01696	-0.00074	0.03543	0.0009	0.0118	0
35	SLU 101	0.01696	-0.00074	0.03543	0.0012	0.0118	0
35	SLU 102	0.01696	-0.00074	0.03543	0.0012	0.0118	0
35	SLU 103	0.01696	-0.00074	0.03543	0.0009	0.0118	0
35	SLU 104	0.01696	-0.00074	0.03543	0.0011	0.0118	0
35	SLU 105	0.0185	-0.00076	0.03897	0.0012	0.0128	0
35	SLU 106	0.0185	-0.00076	0.03897	0.0012	0.0128	0
35	SLU 107	0.01849	-0.00076	0.03897	0.001	0.0128	0
35	SLU 108	0.0185	-0.00076	0.03897	0.0012	0.0128	0
35	SLU 109	0.02003	-0.00078	0.04251	0.001	0.0137	0
35	SLU 110	0.02003	-0.00078	0.04251	0.0012	0.0137	0
35	SLU 111	0.02003	-0.00078	0.04251	0.001	0.0137	0
35	SLU 112	0.02003	-0.00078	0.04251	0.0012	0.0137	0
35	SLU 113	0.02623	-0.00085	0.05853	0.0015	0.0178	0
35	SLU 114	0.02623	-0.00085	0.05853	0.0015	0.0178	0
35	SLU 115	0.02623	-0.00085	0.05852	0.0013	0.0178	0
35	SLU 116	0.02623	-0.00085	0.05853	0.0015	0.0178	0
35	SLU 117	0.02776	-0.00087	0.06207	0.0016	0.0187	0
35	SLU 118	0.02776	-0.00087	0.06207	0.0016	0.0187	0
35	SLU 119	0.02776	-0.00087	0.06207	0.0014	0.0187	0
35	SLU 120	0.02776	-0.00087	0.06207	0.0015	0.0187	0
35	SLU 121	0.02929	-0.00089	0.06561	0.0014	0.0197	0
35	SLU 122	0.02929	-0.00089	0.06561	0.0016	0.0197	0
35	SLU 123	0.02929	-0.00089	0.06561	0.0014	0.0197	0
35	SLU 124	0.02929	-0.00089	0.06561	0.0016	0.0197	0
35	SLU 125	0.04012	-0.00103	0.09317	0.0019	0.0267	0
35	SLU 126	0.04012	-0.00102	0.09317	0.002	0.0267	0
35	SLU 127	0.04012	-0.00102	0.09317	0.0019	0.0267	0
35	SLU 128	0.04012	-0.00102	0.09317	0.002	0.0267	0
35	SLU 129	0.04165	-0.00104	0.09671	0.0019	0.0276	0
35	SLU 130	0.04166	-0.00104	0.09671	0.0021	0.0276	0
35	SLU 131	0.04165	-0.00104	0.09671	0.0019	0.0276	0
35	SLU 132	0.04166	-0.00104	0.09671	0.0021	0.0276	0
35	SLE RA 1	0.01305	-0.00057	0.02725	0.0007	0.0091	0
35	SLE RA 2	0.01305	-0.00057	0.02726	0.0009	0.0091	0
35	SLE RA 3	0.01305	-0.00057	0.02726	0.0009	0.0091	0

Nodo	Cont.	Spostamento			Rotazione		
Ind.	N.br.	ux	uy	uz	rx	ry	rz
35	SLE RA 4	0.01305	-0.00057	0.02725	0.0007	0.0091	0
35	SLE RA 5	0.01305	-0.00057	0.02725	0.0008	0.0091	0
35	SLE RA 6	0.01407	-0.00058	0.02962	0.0009	0.0097	0
35	SLE RA 7	0.01407	-0.00058	0.02962	0.0009	0.0097	0
35	SLE RA 8	0.01407	-0.00058	0.02961	0.0008	0.0097	0
35	SLE RA 9	0.01407	-0.00058	0.02961	0.0009	0.0097	0
35	SLE RA 10	0.01509	-0.0006	0.03197	0.0008	0.0104	0
35	SLE RA 11	0.01509	-0.00059	0.03198	0.0009	0.0104	0
35	SLE RA 12	0.01509	-0.0006	0.03197	0.0008	0.0104	0
35	SLE RA 13	0.01509	-0.00059	0.03198	0.0009	0.0104	0
35	SLE RA 14	0.01922	-0.00064	0.04265	0.0011	0.013	0
35	SLE RA 15	0.01922	-0.00064	0.04265	0.0011	0.013	0
35	SLE RA 16	0.01922	-0.00065	0.04265	0.001	0.013	0
35	SLE RA 17	0.01922	-0.00064	0.04265	0.0011	0.013	0
35	SLE RA 18	0.02025	-0.00066	0.04501	0.0012	0.0137	0
35	SLE RA 19	0.02025	-0.00066	0.04501	0.0012	0.0137	0
35	SLE RA 20	0.02025	-0.00066	0.04501	0.001	0.0137	0
35	SLE RA 21	0.02025	-0.00066	0.04501	0.0011	0.0137	0
35	SLE RA 22	0.02127	-0.00067	0.04737	0.001	0.0143	0
35	SLE RA 23	0.02127	-0.00067	0.04737	0.0012	0.0143	0
35	SLE RA 24	0.02127	-0.00067	0.04737	0.001	0.0143	0
35	SLE RA 25	0.02127	-0.00067	0.04737	0.0012	0.0143	0
35	SLE RA 26	0.02849	-0.00076	0.06575	0.0014	0.019	0
35	SLE RA 27	0.02849	-0.00076	0.06575	0.0015	0.019	0
35	SLE RA 28	0.02849	-0.00076	0.06575	0.0014	0.019	0
35	SLE RA 29	0.02849	-0.00076	0.06575	0.0015	0.019	0
35	SLE RA 30	0.02951	-0.00077	0.06811	0.0014	0.0196	0
35	SLE RA 31	0.02951	-0.00077	0.06811	0.0015	0.0196	0
35	SLE RA 32	0.02951	-0.00077	0.06811	0.0014	0.0196	0
35	SLE RA 33	0.02951	-0.00077	0.06811	0.0015	0.0196	0
35	SLE FR 1	0.01305	-0.00057	0.02725	0.0007	0.0091	0
35	SLE FR 2	0.01305	-0.00057	0.02725	0.0008	0.0091	0
35	SLE FR 3	0.01305	-0.00057	0.02725	0.0007	0.0091	0
35	SLE FR 4	0.01346	-0.00057	0.0282	0.0007	0.0093	0
35	SLE FR 5	0.01922	-0.00065	0.04265	0.001	0.013	0
35	SLE QP 1	0.01305	-0.00057	0.02725	0.0007	0.0091	0
35	SLO 1	-0.0777	-0.00431	-0.13573	-0.0327	0.0162	0.0012
35	SLO 2	-0.0777	-0.00431	-0.13573	-0.0327	0.0162	0.0012
35	SLO 3	-0.0777	0.00317	-0.13573	0.0324	0.0162	-0.0012
35	SLO 4	-0.0777	0.00317	-0.13573	0.0324	0.0162	-0.0012
35	SLO 5	-0.01418	-0.01303	-0.02164	-0.108	0.0112	0.0041
35	SLO 6	-0.01418	-0.01303	-0.02164	-0.108	0.0112	0.0041
35	SLO 7	-0.01418	0.01189	-0.02164	0.1089	0.0112	-0.0041
35	SLO 8	-0.01418	0.01189	-0.02164	0.1089	0.0112	-0.0041
35	SLO 9	0.04027	-0.01303	0.07615	-0.1075	0.0069	0.0041
35	SLO 10	0.04027	-0.01303	0.07615	-0.1075	0.0069	0.0041
35	SLO 11	0.04027	0.01189	0.07615	0.1094	0.0069	-0.0041
35	SLO 12	0.04027	0.01189	0.07615	0.1094	0.0069	-0.0041
35	SLO 13	0.10379	-0.00431	0.19024	-0.0309	0.0019	0.0012
35	SLO 14	0.10379	-0.00431	0.19024	-0.0309	0.0019	0.0012
35	SLO 15	0.10379	0.00317	0.19024	0.0341	0.0019	-0.0012
35	SLO 16	0.10379	0.00317	0.19024	0.0341	0.0019	-0.0012
35	SLD 1	-0.06141	-0.00403	-0.10648	-0.03	0.0149	0.0011
35	SLD 2	-0.06141	-0.00403	-0.10648	-0.03	0.0149	0.0011
35	SLD 3	-0.06141	0.00288	-0.10648	0.0301	0.0149	-0.0012
35	SLD 4	-0.06141	0.00288	-0.10648	0.0301	0.0149	-0.0012
35	SLD 5	-0.00929	-0.01208	-0.01287	-0.0997	0.0108	0.0038
35	SLD 6	-0.00929	-0.01208	-0.01287	-0.0997	0.0108	0.0038
35	SLD 7	-0.00929	0.01094	-0.01287	0.1007	0.0108	-0.0038
35	SLD 8	-0.00929	0.01094	-0.01287	0.1007	0.0108	-0.0038
35	SLD 9	0.03539	-0.01208	0.06737	-0.0993	0.0073	0.0038
35	SLD 10	0.03539	-0.01208	0.06737	-0.0993	0.0073	0.0038
35	SLD 11	0.03538	0.01094	0.06737	0.1011	0.0073	-0.0038
35	SLD 12	0.03538	0.01094	0.06737	0.1011	0.0073	-0.0038
35	SLD 13	0.08751	-0.00402	0.16099	-0.0286	0.0032	0.0011
35	SLD 14	0.08751	-0.00402	0.16099	-0.0286	0.0032	0.0011
35	SLD 15	0.08751	0.00289	0.16099	0.0315	0.0032	-0.0012
35	SLD 16	0.08751	0.00289	0.16099	0.0315	0.0032	-0.0012
35	SLV 1	-0.15329	-0.00968	-0.27151	-0.0802	0.0222	0.003
35	SLV 2	-0.15329	-0.00968	-0.27151	-0.0802	0.0222	0.003
35	SLV 3	-0.15329	0.00854	-0.27151	0.0784	0.0222	-0.003
35	SLV 4	-0.15329	0.00854	-0.27151	0.0784	0.0222	-0.003
35	SLV 5	-0.03685	-0.03094	-0.06238	-0.2641	0.013	0.01
35	SLV 6	-0.03685	-0.03094	-0.06238	-0.2641	0.013	0.01
35	SLV 7	-0.03685	0.0298	-0.06238	0.2646	0.013	-0.0101
35	SLV 8	-0.03685	0.0298	-0.06238	0.2646	0.013	-0.0101
35	SLV 9	0.06295	-0.03094	0.11688	-0.2631	0.0052	0.01
35	SLV 10	0.06295	-0.03094	0.11688	-0.2631	0.0052	0.01
35	SLV 11	0.06295	0.0298	0.11688	0.2655	0.0052	-0.0101
35	SLV 12	0.06295	0.0298	0.11688	0.2655	0.0052	-0.0101
35	SLV 13	0.17939	-0.00968	0.32602	-0.077	-0.004	0.003
35	SLV 14	0.17939	-0.00968	0.32602	-0.077	-0.004	0.003
35	SLV 15	0.17939	0.00854	0.32602	0.0816	-0.004	-0.003
35	SLV 16	0.17939	0.00854	0.32602	0.0816	-0.004	-0.003
36	SLU 1	0.0241	-0.00059	-0.00778	0.0009	0.01	-0.0014
36	SLU 2	0.0241	-0.00059	-0.00778	0.001	0.01	-0.0014
36	SLU 3	0.0241	-0.00059	-0.00778	0.001	0.01	-0.0015
36	SLU 4	0.0241	-0.00059	-0.00778	0.0009	0.01	-0.0014
36	SLU 5	0.0241	-0.00059	-0.00778	0.001	0.01	-0.0015
36	SLU 6	0.02673	-0.00061	-0.0077	0.001	0.011	-0.0015
36	SLU 7	0.02673	-0.00061	-0.0077	0.001	0.011	-0.0015
36	SLU 8	0.02673	-0.00061	-0.0077	0.001	0.011	-0.0015
36	SLU 9	0.02673	-0.00061	-0.0077	0.001	0.011	-0.0015
36	SLU 10	0.02936	-0.00063	-0.00762	0.001	0.012	-0.0015
36	SLU 11	0.02936	-0.00063	-0.00762	0.001	0.012	-0.0015

Nodo	Cont.	Spostamento			Rotazione		
Ind.	N.br.	ux	uy	uz	rx	ry	rz
36	SLU 12	0.02936	-0.00063	-0.00762	0.001	0.012	-0.0015
36	SLU 13	0.02936	-0.00063	-0.00762	0.001	0.012	-0.0015
36	SLU 14	0.03933	-0.00072	-0.00566	0.0011	0.0166	-0.0015
36	SLU 15	0.03933	-0.00072	-0.00566	0.0011	0.0166	-0.0016
36	SLU 16	0.03933	-0.00071	-0.00566	0.001	0.0166	-0.0015
36	SLU 17	0.03933	-0.00072	-0.00566	0.0011	0.0166	-0.0016
36	SLU 18	0.04196	-0.00074	-0.00558	0.0011	0.0176	-0.0016
36	SLU 19	0.04196	-0.00074	-0.00558	0.0011	0.0176	-0.0016
36	SLU 20	0.04195	-0.00074	-0.00558	0.0011	0.0176	-0.0016
36	SLU 21	0.04196	-0.00074	-0.00558	0.0011	0.0176	-0.0016
36	SLU 22	0.04458	-0.00076	-0.00549	0.0011	0.0186	-0.0016
36	SLU 23	0.04458	-0.00076	-0.00549	0.0011	0.0186	-0.0016
36	SLU 24	0.04458	-0.00076	-0.00549	0.0011	0.0186	-0.0016
36	SLU 25	0.04458	-0.00076	-0.00549	0.0011	0.0186	-0.0016
36	SLU 26	0.06217	-0.0009	-0.00248	0.0012	0.0266	-0.0016
36	SLU 27	0.06217	-0.0009	-0.00248	0.0012	0.0266	-0.0017
36	SLU 28	0.06217	-0.0009	-0.00248	0.0012	0.0266	-0.0016
36	SLU 29	0.06217	-0.0009	-0.00248	0.0012	0.0266	-0.0017
36	SLU 30	0.0648	-0.00092	-0.00239	0.0012	0.0276	-0.0017
36	SLU 31	0.0648	-0.00092	-0.00239	0.0013	0.0276	-0.0017
36	SLU 32	0.0648	-0.00092	-0.00239	0.0012	0.0276	-0.0017
36	SLU 33	0.0648	-0.00092	-0.00239	0.0013	0.0276	-0.0017
36	SLU 34	0.0241	-0.00059	-0.00778	0.0009	0.01	-0.0014
36	SLU 35	0.0241	-0.00059	-0.00778	0.001	0.01	-0.0014
36	SLU 36	0.0241	-0.00059	-0.00778	0.001	0.01	-0.0015
36	SLU 37	0.0241	-0.00059	-0.00778	0.0009	0.01	-0.0014
36	SLU 38	0.0241	-0.00059	-0.00778	0.001	0.01	-0.0015
36	SLU 39	0.02673	-0.00061	-0.0077	0.001	0.011	-0.0015
36	SLU 40	0.02673	-0.00061	-0.0077	0.001	0.011	-0.0015
36	SLU 41	0.02673	-0.00061	-0.0077	0.001	0.011	-0.0015
36	SLU 42	0.02673	-0.00061	-0.0077	0.001	0.011	-0.0015
36	SLU 43	0.02936	-0.00063	-0.00762	0.001	0.012	-0.0015
36	SLU 44	0.02936	-0.00063	-0.00762	0.001	0.012	-0.0015
36	SLU 45	0.02936	-0.00063	-0.00762	0.001	0.012	-0.0015
36	SLU 46	0.02936	-0.00063	-0.00762	0.001	0.012	-0.0015
36	SLU 47	0.03933	-0.00072	-0.00566	0.0011	0.0166	-0.0015
36	SLU 48	0.03933	-0.00072	-0.00566	0.0011	0.0166	-0.0016
36	SLU 49	0.03933	-0.00071	-0.00566	0.001	0.0166	-0.0015
36	SLU 50	0.03933	-0.00072	-0.00566	0.0011	0.0166	-0.0016
36	SLU 51	0.04196	-0.00074	-0.00558	0.0011	0.0176	-0.0016
36	SLU 52	0.04196	-0.00074	-0.00558	0.0011	0.0176	-0.0016
36	SLU 53	0.04195	-0.00074	-0.00558	0.0011	0.0176	-0.0016
36	SLU 54	0.04196	-0.00074	-0.00558	0.0011	0.0176	-0.0016
36	SLU 55	0.04458	-0.00076	-0.00549	0.0011	0.0186	-0.0016
36	SLU 56	0.04458	-0.00076	-0.00549	0.0011	0.0186	-0.0016
36	SLU 57	0.04458	-0.00076	-0.00549	0.0011	0.0186	-0.0016
36	SLU 58	0.04458	-0.00076	-0.00549	0.0011	0.0186	-0.0016
36	SLU 59	0.06217	-0.0009	-0.00248	0.0012	0.0266	-0.0016
36	SLU 60	0.06217	-0.0009	-0.00248	0.0012	0.0266	-0.0017
36	SLU 61	0.06217	-0.0009	-0.00248	0.0012	0.0266	-0.0016
36	SLU 62	0.06217	-0.0009	-0.00248	0.0012	0.0266	-0.0017
36	SLU 63	0.0648	-0.00092	-0.00239	0.0012	0.0276	-0.0017
36	SLU 64	0.0648	-0.00092	-0.00239	0.0013	0.0276	-0.0017
36	SLU 65	0.0648	-0.00092	-0.00239	0.0012	0.0276	-0.0017
36	SLU 66	0.0648	-0.00092	-0.00239	0.0013	0.0276	-0.0017
36	SLU 67	0.03133	-0.00077	-0.01012	0.0012	0.013	-0.0018
36	SLU 68	0.03133	-0.00077	-0.01012	0.0012	0.013	-0.0019
36	SLU 69	0.03133	-0.00077	-0.01012	0.0012	0.013	-0.0019
36	SLU 70	0.03133	-0.00077	-0.01012	0.0012	0.013	-0.0018
36	SLU 71	0.03133	-0.00077	-0.01012	0.0012	0.013	-0.0019
36	SLU 72	0.03396	-0.00079	-0.01003	0.0013	0.014	-0.0019
36	SLU 73	0.03396	-0.00079	-0.01003	0.0013	0.014	-0.0019
36	SLU 74	0.03396	-0.00079	-0.01003	0.0012	0.014	-0.0019
36	SLU 75	0.03396	-0.00079	-0.01003	0.0013	0.014	-0.0019
36	SLU 76	0.03658	-0.00081	-0.00995	0.0013	0.015	-0.0019
36	SLU 77	0.03659	-0.00081	-0.00995	0.0013	0.015	-0.0019
36	SLU 78	0.03658	-0.00081	-0.00995	0.0013	0.015	-0.0019
36	SLU 79	0.03659	-0.00081	-0.00995	0.0013	0.015	-0.002
36	SLU 80	0.04656	-0.00089	-0.008	0.0013	0.0196	-0.002
36	SLU 81	0.04656	-0.00089	-0.008	0.0014	0.0196	-0.002
36	SLU 82	0.04656	-0.00089	-0.008	0.0013	0.0196	-0.0019
36	SLU 83	0.04656	-0.00089	-0.008	0.0014	0.0196	-0.002
36	SLU 84	0.04919	-0.00091	-0.00791	0.0014	0.0206	-0.002
36	SLU 85	0.04919	-0.00091	-0.00791	0.0014	0.0206	-0.002
36	SLU 86	0.04918	-0.00091	-0.00791	0.0013	0.0206	-0.002
36	SLU 87	0.04919	-0.00091	-0.00791	0.0014	0.0206	-0.002
36	SLU 88	0.05181	-0.00093	-0.00783	0.0014	0.0216	-0.002
36	SLU 89	0.05181	-0.00093	-0.00783	0.0014	0.0216	-0.002
36	SLU 90	0.05181	-0.00093	-0.00783	0.0014	0.0216	-0.002
36	SLU 91	0.05181	-0.00093	-0.00783	0.0014	0.0216	-0.0021
36	SLU 92	0.0694	-0.00108	-0.00481	0.0015	0.0296	-0.002
36	SLU 93	0.0694	-0.00108	-0.00481	0.0015	0.0296	-0.0021
36	SLU 94	0.0694	-0.00108	-0.00481	0.0015	0.0296	-0.0021
36	SLU 95	0.0694	-0.00108	-0.00481	0.0015	0.0296	-0.0021
36	SLU 96	0.07202	-0.0011	-0.00473	0.0015	0.0306	-0.0021
36	SLU 97	0.07203	-0.0011	-0.00473	0.0015	0.0306	-0.0021
36	SLU 98	0.07202	-0.0011	-0.00473	0.0015	0.0306	-0.0021
36	SLU 99	0.07203	-0.0011	-0.00473	0.0015	0.0306	-0.0022
36	SLU 100	0.03133	-0.00077	-0.01012	0.0012	0.013	-0.0018
36	SLU 101	0.03133	-0.00077	-0.01012	0.0012	0.013	-0.0019
36	SLU 102	0.03133	-0.00077	-0.01012	0.0012	0.013	-0.0019
36	SLU 103	0.03133	-0.00077	-0.01012	0.0012	0.013	-0.0018
36	SLU 104	0.03133	-0.00077	-0.01012	0.0012	0.013	-0.0019
36	SLU 105	0.03396	-0.00079	-0.01003	0.0013	0.014	-0.0019
36	SLU 106	0.03396	-0.00079	-0.01003	0.0013	0.014	-0.0019

Nodo	Cont.	Spostamento			Rotazione		
Ind.	N.br.	ux	uy	uz	rx	ry	rz
36	SLU 107	0.03396	-0.00079	-0.01003	0.0012	0.014	-0.0019
36	SLU 108	0.03396	-0.00079	-0.01003	0.0013	0.014	-0.0019
36	SLU 109	0.03658	-0.00081	-0.00995	0.0013	0.015	-0.0019
36	SLU 110	0.03659	-0.00081	-0.00995	0.0013	0.015	-0.0019
36	SLU 111	0.03658	-0.00081	-0.00995	0.0013	0.015	-0.0019
36	SLU 112	0.03659	-0.00081	-0.00995	0.0013	0.015	-0.002
36	SLU 113	0.04656	-0.00089	-0.008	0.0013	0.0196	-0.002
36	SLU 114	0.04656	-0.00089	-0.008	0.0014	0.0196	-0.002
36	SLU 115	0.04656	-0.00089	-0.008	0.0013	0.0196	-0.0019
36	SLU 116	0.04656	-0.00089	-0.008	0.0014	0.0196	-0.002
36	SLU 117	0.04919	-0.00091	-0.00791	0.0014	0.0206	-0.002
36	SLU 118	0.04919	-0.00091	-0.00791	0.0014	0.0206	-0.002
36	SLU 119	0.04918	-0.00091	-0.00791	0.0013	0.0206	-0.002
36	SLU 120	0.04919	-0.00091	-0.00791	0.0014	0.0206	-0.002
36	SLU 121	0.05181	-0.00093	-0.00783	0.0014	0.0216	-0.002
36	SLU 122	0.05181	-0.00093	-0.00783	0.0014	0.0216	-0.002
36	SLU 123	0.05181	-0.00093	-0.00783	0.0014	0.0216	-0.002
36	SLU 124	0.05181	-0.00093	-0.00783	0.0014	0.0216	-0.0021
36	SLU 125	0.0694	-0.00108	-0.00481	0.0015	0.0296	-0.002
36	SLU 126	0.0694	-0.00108	-0.00481	0.0015	0.0296	-0.0021
36	SLU 127	0.0694	-0.00108	-0.00481	0.0015	0.0296	-0.0021
36	SLU 128	0.0694	-0.00108	-0.00481	0.0015	0.0296	-0.0021
36	SLU 129	0.07202	-0.0011	-0.00473	0.0015	0.0306	-0.0021
36	SLU 130	0.07203	-0.0011	-0.00473	0.0015	0.0306	-0.0021
36	SLU 131	0.07202	-0.0011	-0.00473	0.0015	0.0306	-0.0021
36	SLU 132	0.07203	-0.0011	-0.00473	0.0015	0.0306	-0.0022
36	SLE RA 1	0.0241	-0.00059	-0.00778	0.0009	0.01	-0.0014
36	SLE RA 2	0.0241	-0.00059	-0.00778	0.0009	0.01	-0.0014
36	SLE RA 3	0.0241	-0.00059	-0.00778	0.001	0.01	-0.0014
36	SLE RA 4	0.0241	-0.00059	-0.00778	0.0009	0.01	-0.0014
36	SLE RA 5	0.0241	-0.00059	-0.00778	0.001	0.01	-0.0014
36	SLE RA 6	0.02585	-0.00061	-0.00773	0.001	0.0107	-0.0015
36	SLE RA 7	0.02585	-0.00061	-0.00773	0.001	0.0107	-0.0015
36	SLE RA 8	0.02585	-0.00061	-0.00773	0.0009	0.0107	-0.0014
36	SLE RA 9	0.02585	-0.00061	-0.00773	0.001	0.0107	-0.0015
36	SLE RA 10	0.0276	-0.00062	-0.00767	0.001	0.0114	-0.0014
36	SLE RA 11	0.0276	-0.00062	-0.00767	0.001	0.0114	-0.0015
36	SLE RA 12	0.0276	-0.00062	-0.00767	0.001	0.0114	-0.0015
36	SLE RA 13	0.0276	-0.00062	-0.00767	0.001	0.0114	-0.0015
36	SLE RA 14	0.03425	-0.00067	-0.00637	0.001	0.0144	-0.0015
36	SLE RA 15	0.03425	-0.00067	-0.00637	0.001	0.0144	-0.0015
36	SLE RA 16	0.03425	-0.00067	-0.00637	0.001	0.0144	-0.0015
36	SLE RA 17	0.03425	-0.00067	-0.00637	0.001	0.0144	-0.0015
36	SLE RA 18	0.036	-0.00069	-0.00631	0.001	0.0151	-0.0015
36	SLE RA 19	0.036	-0.00069	-0.00631	0.001	0.0151	-0.0015
36	SLE RA 20	0.036	-0.00069	-0.00631	0.001	0.0151	-0.0015
36	SLE RA 21	0.036	-0.00069	-0.00631	0.001	0.0151	-0.0015
36	SLE RA 22	0.03775	-0.0007	-0.00626	0.001	0.0158	-0.0015
36	SLE RA 23	0.03776	-0.0007	-0.00626	0.0011	0.0158	-0.0015
36	SLE RA 24	0.03775	-0.0007	-0.00626	0.001	0.0158	-0.0015
36	SLE RA 25	0.03776	-0.0007	-0.00626	0.0011	0.0158	-0.0016
36	SLE RA 26	0.04948	-0.0008	-0.00425	0.0011	0.021	-0.0015
36	SLE RA 27	0.04948	-0.0008	-0.00425	0.0011	0.021	-0.0016
36	SLE RA 28	0.04948	-0.0008	-0.00425	0.0011	0.021	-0.0016
36	SLE RA 29	0.04948	-0.0008	-0.00425	0.0011	0.021	-0.0016
36	SLE RA 30	0.05123	-0.00081	-0.00419	0.0011	0.0217	-0.0016
36	SLE RA 31	0.05123	-0.00081	-0.00419	0.0011	0.0217	-0.0016
36	SLE RA 32	0.05123	-0.00081	-0.00419	0.0011	0.0217	-0.0016
36	SLE RA 33	0.05123	-0.00081	-0.00419	0.0011	0.0217	-0.0016
36	SLE FR 1	0.0241	-0.00059	-0.00778	0.0009	0.01	-0.0014
36	SLE FR 2	0.0241	-0.00059	-0.00778	0.0009	0.01	-0.0014
36	SLE FR 3	0.0241	-0.00059	-0.00778	0.0009	0.01	-0.0014
36	SLE FR 4	0.0248	-0.0006	-0.00776	0.0009	0.0103	-0.0014
36	SLE FR 5	0.03425	-0.00067	-0.00637	0.001	0.0144	-0.0014
36	SLE QP 1	0.0241	-0.00059	-0.00778	0.0009	0.01	-0.0014
36	SLO 1	-0.06926	-0.00077	-0.04754	-0.1087	-0.04	0.261
36	SLO 2	-0.06926	-0.00077	-0.04754	-0.1087	-0.04	0.261
36	SLO 3	-0.06926	-0.00042	-0.04754	0.1106	-0.04	-0.2639
36	SLO 4	-0.06926	-0.00042	-0.04754	0.1106	-0.04	-0.2639
36	SLO 5	-0.00391	-0.00117	-0.01971	-0.3646	-0.005	0.8734
36	SLO 6	-0.00391	-0.00117	-0.01971	-0.3646	-0.005	0.8734
36	SLO 7	-0.00391	-0.00002	-0.01971	0.3664	-0.005	-0.8762
36	SLO 8	-0.00391	-0.00002	-0.01971	0.3664	-0.005	-0.8762
36	SLO 9	0.05211	-0.00117	0.00414	-0.3646	0.025	0.8735
36	SLO 10	0.05211	-0.00117	0.00414	-0.3646	0.025	0.8735
36	SLO 11	0.05211	-0.00002	0.00414	0.3664	0.025	-0.8762
36	SLO 12	0.05211	-0.00002	0.00414	0.3664	0.025	-0.8762
36	SLO 13	0.11746	-0.00076	0.03198	-0.1088	0.06	0.2611
36	SLO 14	0.11746	-0.00076	0.03198	-0.1088	0.06	0.2611
36	SLO 15	0.11746	-0.00042	0.03198	0.1105	0.06	-0.2638
36	SLO 16	0.11746	-0.00042	0.03198	0.1105	0.06	-0.2638
36	SLD 1	-0.05251	-0.00075	-0.04041	-0.1004	-0.031	0.2411
36	SLD 2	-0.05251	-0.00075	-0.04041	-0.1004	-0.031	0.2411
36	SLD 3	-0.05251	-0.00044	-0.04041	0.1023	-0.031	-0.2439
36	SLD 4	-0.05251	-0.00044	-0.04041	0.1023	-0.031	-0.2439
36	SLD 5	0.00112	-0.00112	-0.01757	-0.3368	-0.0023	0.8069
36	SLD 6	0.00112	-0.00112	-0.01757	-0.3368	-0.0023	0.8069
36	SLD 7	0.00112	-0.00006	-0.01757	0.3386	-0.0023	-0.8097
36	SLD 8	0.00112	-0.00006	-0.01757	0.3386	-0.0023	-0.8097
36	SLD 9	0.04708	-0.00112	0.002	-0.3368	0.0223	0.807
36	SLD 10	0.04708	-0.00112	0.002	-0.3368	0.0223	0.807
36	SLD 11	0.04708	-0.00006	0.002	0.3386	0.0223	-0.8097
36	SLD 12	0.04708	-0.00006	0.002	0.3386	0.0223	-0.8097
36	SLD 13	0.1007	-0.00075	0.02484	-0.1004	0.0511	0.2412
36	SLD 14	0.1007	-0.00075	0.02484	-0.1004	0.0511	0.2412

Nodo	Cont.	Spostamento			Rotazione		
Ind.	N.br.	ux	uy	uz	rx	ry	rz
36	SLD 15	0.1007	-0.00043	0.02484	0.1022	0.0511	-0.2439
36	SLD 16	0.1007	-0.00043	0.02484	0.1022	0.0511	-0.2439
36	SLV 1	-0.14704	-0.00102	-0.08067	-0.2662	-0.0817	0.6382
36	SLV 2	-0.14704	-0.00102	-0.08067	-0.2662	-0.0817	0.6382
36	SLV 3	-0.14704	-0.00018	-0.08067	0.2682	-0.0817	-0.6411
36	SLV 4	-0.14704	-0.00018	-0.08067	0.2682	-0.0817	-0.6411
36	SLV 5	-0.02724	-0.002	-0.02965	-0.8898	-0.0175	2.1306
36	SLV 6	-0.02724	-0.002	-0.02965	-0.8898	-0.0175	2.1306
36	SLV 7	-0.02724	0.00081	-0.02965	0.8917	-0.0175	-2.1334
36	SLV 8	-0.02724	0.00081	-0.02965	0.8917	-0.0175	-2.1334
36	SLV 9	0.07544	-0.00199	0.01408	-0.8898	0.0375	2.1306
36	SLV 10	0.07544	-0.00199	0.01408	-0.8898	0.0375	2.1306
36	SLV 11	0.07544	0.00081	0.01408	0.8916	0.0375	-2.1334
36	SLV 12	0.07544	0.00081	0.01408	0.8916	0.0375	-2.1334
36	SLV 13	0.19523	-0.00101	0.0651	-0.2664	0.1017	0.6383
36	SLV 14	0.19523	-0.00101	0.0651	-0.2664	0.1017	0.6383
36	SLV 15	0.19523	-0.00017	0.0651	0.2681	0.1017	-0.6409
36	SLV 16	0.19523	-0.00017	0.0651	0.2681	0.1017	-0.6409
37	SLU 1	-0.00422	-0.00019	-0.00754	0.0003	0.0051	0.0004
37	SLU 2	-0.03973	-0.00019	-0.00229	0.0003	0.0127	0.0005
37	SLU 3	-0.03973	-0.00019	-0.00229	0.0003	0.0127	0.0005
37	SLU 4	-0.00422	-0.00019	-0.00754	0.0003	0.0051	0.0004
37	SLU 5	-0.03085	-0.00019	-0.00361	0.0003	0.0108	0.0005
37	SLU 6	-0.04016	-0.00019	-0.00251	0.0003	0.013	0.0005
37	SLU 7	-0.04016	-0.00019	-0.00251	0.0003	0.013	0.0005
37	SLU 8	-0.00465	-0.00019	-0.00775	0.0003	0.0053	0.0005
37	SLU 9	-0.03128	-0.00019	-0.00382	0.0003	0.0111	0.0005
37	SLU 10	-0.00508	-0.0002	-0.00797	0.0003	0.0056	0.0004
37	SLU 11	-0.03171	-0.0002	-0.00403	0.0003	0.0113	0.0005
37	SLU 12	-0.00508	-0.0002	-0.00797	0.0003	0.0056	0.0005
37	SLU 13	-0.03171	-0.0002	-0.00403	0.0003	0.0113	0.0005
37	SLU 14	-0.04002	-0.00023	-0.00271	0.0003	0.0131	0.0004
37	SLU 15	-0.04002	-0.00023	-0.00271	0.0003	0.0131	0.0004
37	SLU 16	-0.00451	-0.00023	-0.00796	0.0003	0.0054	0.0004
37	SLU 17	-0.03114	-0.00023	-0.00402	0.0003	0.0112	0.0004
37	SLU 18	-0.04045	-0.00023	-0.00292	0.0003	0.0133	0.0004
37	SLU 19	-0.04045	-0.00023	-0.00292	0.0003	0.0133	0.0004
37	SLU 20	-0.00494	-0.00023	-0.00817	0.0003	0.0057	0.0004
37	SLU 21	-0.03157	-0.00023	-0.00423	0.0003	0.0114	0.0004
37	SLU 22	-0.00537	-0.00024	-0.00838	0.0003	0.006	0.0004
37	SLU 23	-0.032	-0.00024	-0.00444	0.0003	0.0117	0.0004
37	SLU 24	-0.00537	-0.00024	-0.00838	0.0003	0.006	0.0004
37	SLU 25	-0.032	-0.00024	-0.00444	0.0003	0.0117	0.0004
37	SLU 26	-0.00494	-0.00029	-0.00858	0.0002	0.006	0.0002
37	SLU 27	-0.03157	-0.00029	-0.00464	0.0003	0.0117	0.0002
37	SLU 28	-0.00494	-0.00029	-0.00858	0.0003	0.006	0.0002
37	SLU 29	-0.03157	-0.00029	-0.00464	0.0003	0.0117	0.0002
37	SLU 30	-0.00537	-0.00029	-0.00879	0.0003	0.0062	0.0002
37	SLU 31	-0.032	-0.00029	-0.00485	0.0003	0.012	0.0002
37	SLU 32	-0.00537	-0.00029	-0.00879	0.0003	0.0062	0.0002
37	SLU 33	-0.032	-0.00029	-0.00485	0.0003	0.012	0.0003
37	SLU 34	-0.00422	-0.00019	-0.00754	0.0003	0.0051	0.0004
37	SLU 35	-0.03973	-0.00019	-0.00229	0.0003	0.0127	0.0005
37	SLU 36	-0.03973	-0.00019	-0.00229	0.0003	0.0127	0.0005
37	SLU 37	-0.00422	-0.00019	-0.00754	0.0003	0.0051	0.0004
37	SLU 38	-0.03085	-0.00019	-0.00361	0.0003	0.0108	0.0005
37	SLU 39	-0.04016	-0.00019	-0.00251	0.0003	0.013	0.0005
37	SLU 40	-0.04016	-0.00019	-0.00251	0.0003	0.013	0.0005
37	SLU 41	-0.00465	-0.00019	-0.00775	0.0003	0.0053	0.0005
37	SLU 42	-0.03128	-0.00019	-0.00382	0.0003	0.0111	0.0005
37	SLU 43	-0.00508	-0.0002	-0.00797	0.0003	0.0056	0.0004
37	SLU 44	-0.03171	-0.0002	-0.00403	0.0003	0.0113	0.0005
37	SLU 45	-0.00508	-0.0002	-0.00797	0.0003	0.0056	0.0005
37	SLU 46	-0.03171	-0.0002	-0.00403	0.0003	0.0113	0.0005
37	SLU 47	-0.04002	-0.00023	-0.00271	0.0003	0.0131	0.0004
37	SLU 48	-0.04002	-0.00023	-0.00271	0.0003	0.0131	0.0004
37	SLU 49	-0.00451	-0.00023	-0.00796	0.0003	0.0054	0.0004
37	SLU 50	-0.03114	-0.00023	-0.00402	0.0003	0.0112	0.0004
37	SLU 51	-0.04045	-0.00023	-0.00292	0.0003	0.0133	0.0004
37	SLU 52	-0.04045	-0.00023	-0.00292	0.0003	0.0133	0.0004
37	SLU 53	-0.00494	-0.00023	-0.00817	0.0003	0.0057	0.0004
37	SLU 54	-0.03157	-0.00023	-0.00423	0.0003	0.0114	0.0004
37	SLU 55	-0.00537	-0.00024	-0.00838	0.0003	0.006	0.0004
37	SLU 56	-0.032	-0.00024	-0.00444	0.0003	0.0117	0.0004
37	SLU 57	-0.00537	-0.00024	-0.00838	0.0003	0.006	0.0004
37	SLU 58	-0.032	-0.00024	-0.00444	0.0003	0.0117	0.0004
37	SLU 59	-0.00494	-0.00029	-0.00858	0.0002	0.006	0.0002
37	SLU 60	-0.03157	-0.00029	-0.00464	0.0003	0.0117	0.0002
37	SLU 61	-0.00494	-0.00029	-0.00858	0.0003	0.006	0.0002
37	SLU 62	-0.03157	-0.00029	-0.00464	0.0003	0.0117	0.0002
37	SLU 63	-0.00537	-0.00029	-0.00879	0.0003	0.0062	0.0002
37	SLU 64	-0.032	-0.00029	-0.00485	0.0003	0.012	0.0002
37	SLU 65	-0.00537	-0.00029	-0.00879	0.0003	0.0062	0.0002
37	SLU 66	-0.032	-0.00029	-0.00485	0.0003	0.012	0.0003
37	SLU 67	-0.00549	-0.00024	-0.00981	0.0004	0.0066	0.0005
37	SLU 68	-0.041	-0.00024	-0.00456	0.0004	0.0142	0.0006
37	SLU 69	-0.041	-0.00024	-0.00456	0.0004	0.0142	0.0006
37	SLU 70	-0.00549	-0.00024	-0.00981	0.0004	0.0066	0.0006
37	SLU 71	-0.03212	-0.00024	-0.00587	0.0004	0.0123	0.0006
37	SLU 72	-0.04143	-0.00025	-0.00477	0.0004	0.0145	0.0006
37	SLU 73	-0.04143	-0.00025	-0.00477	0.0004	0.0145	0.0006
37	SLU 74	-0.00592	-0.00025	-0.01002	0.0004	0.0069	0.0006
37	SLU 75	-0.03255	-0.00025	-0.00608	0.0004	0.0126	0.0006
37	SLU 76	-0.00635	-0.00026	-0.01023	0.0004	0.0071	0.0006
37	SLU 77	-0.03298	-0.00026	-0.00629	0.0004	0.0129	0.0006

Nodo	Cont.	Spostamento			Rotazione		
Ind.	N.br.	ux	uy	uz	rx	ry	rz
37	SLU 78	-0.00635	-0.00026	-0.01023	0.0004	0.0071	0.0006
37	SLU 79	-0.03298	-0.00026	-0.00629	0.0004	0.0129	0.0006
37	SLU 80	-0.04129	-0.00028	-0.00497	0.0004	0.0146	0.0005
37	SLU 81	-0.04129	-0.00028	-0.00497	0.0004	0.0146	0.0005
37	SLU 82	-0.00578	-0.00028	-0.01022	0.0004	0.007	0.0005
37	SLU 83	-0.03241	-0.00028	-0.00628	0.0004	0.0127	0.0005
37	SLU 84	-0.04171	-0.00029	-0.00518	0.0004	0.0149	0.0005
37	SLU 85	-0.04171	-0.00029	-0.00518	0.0004	0.0149	0.0005
37	SLU 86	-0.00621	-0.00029	-0.01043	0.0004	0.0072	0.0005
37	SLU 87	-0.03284	-0.00029	-0.0065	0.0004	0.0129	0.0005
37	SLU 88	-0.00663	-0.0003	-0.01064	0.0004	0.0075	0.0005
37	SLU 89	-0.03326	-0.0003	-0.00671	0.0004	0.0132	0.0005
37	SLU 90	-0.00663	-0.0003	-0.01064	0.0004	0.0075	0.0005
37	SLU 91	-0.03326	-0.0003	-0.00671	0.0004	0.0132	0.0005
37	SLU 92	-0.00621	-0.00034	-0.01084	0.0003	0.0075	0.0003
37	SLU 93	-0.03284	-0.00034	-0.00691	0.0004	0.0132	0.0004
37	SLU 94	-0.00621	-0.00034	-0.01084	0.0003	0.0075	0.0003
37	SLU 95	-0.03284	-0.00034	-0.00691	0.0004	0.0132	0.0004
37	SLU 96	-0.00664	-0.00035	-0.01105	0.0003	0.0078	0.0003
37	SLU 97	-0.03327	-0.00035	-0.00712	0.0004	0.0135	0.0004
37	SLU 98	-0.00664	-0.00035	-0.01105	0.0003	0.0078	0.0004
37	SLU 99	-0.03327	-0.00035	-0.00712	0.0004	0.0135	0.0004
37	SLU 100	-0.00549	-0.00024	-0.00981	0.0004	0.0066	0.0005
37	SLU 101	-0.041	-0.00024	-0.00456	0.0004	0.0142	0.0006
37	SLU 102	-0.041	-0.00024	-0.00456	0.0004	0.0142	0.0006
37	SLU 103	-0.00549	-0.00024	-0.00981	0.0004	0.0066	0.0006
37	SLU 104	-0.03212	-0.00024	-0.00587	0.0004	0.0123	0.0006
37	SLU 105	-0.04143	-0.00025	-0.00477	0.0004	0.0145	0.0006
37	SLU 106	-0.04143	-0.00025	-0.00477	0.0004	0.0145	0.0006
37	SLU 107	-0.00592	-0.00025	-0.01002	0.0004	0.0069	0.0006
37	SLU 108	-0.03255	-0.00025	-0.00608	0.0004	0.0126	0.0006
37	SLU 109	-0.00635	-0.00026	-0.01023	0.0004	0.0071	0.0006
37	SLU 110	-0.03298	-0.00026	-0.00629	0.0004	0.0129	0.0006
37	SLU 111	-0.00635	-0.00026	-0.01023	0.0004	0.0071	0.0006
37	SLU 112	-0.03298	-0.00026	-0.00629	0.0004	0.0129	0.0006
37	SLU 113	-0.04129	-0.00028	-0.00497	0.0004	0.0146	0.0005
37	SLU 114	-0.04129	-0.00028	-0.00497	0.0004	0.0146	0.0005
37	SLU 115	-0.00578	-0.00028	-0.01022	0.0004	0.007	0.0005
37	SLU 116	-0.03241	-0.00028	-0.00628	0.0004	0.0127	0.0005
37	SLU 117	-0.04171	-0.00029	-0.00518	0.0004	0.0149	0.0005
37	SLU 118	-0.04171	-0.00029	-0.00518	0.0004	0.0149	0.0005
37	SLU 119	-0.00621	-0.00029	-0.01043	0.0004	0.0072	0.0005
37	SLU 120	-0.03284	-0.00029	-0.0065	0.0004	0.0129	0.0005
37	SLU 121	-0.00663	-0.0003	-0.01064	0.0004	0.0075	0.0005
37	SLU 122	-0.03326	-0.0003	-0.00671	0.0004	0.0132	0.0005
37	SLU 123	-0.00663	-0.0003	-0.01064	0.0004	0.0075	0.0005
37	SLU 124	-0.03326	-0.0003	-0.00671	0.0004	0.0132	0.0005
37	SLU 125	-0.00621	-0.00034	-0.01084	0.0003	0.0075	0.0003
37	SLU 126	-0.03284	-0.00034	-0.00691	0.0004	0.0132	0.0004
37	SLU 127	-0.00621	-0.00034	-0.01084	0.0003	0.0075	0.0003
37	SLU 128	-0.03284	-0.00034	-0.00691	0.0004	0.0132	0.0004
37	SLU 129	-0.00664	-0.00035	-0.01105	0.0003	0.0078	0.0003
37	SLU 130	-0.03327	-0.00035	-0.00712	0.0004	0.0135	0.0004
37	SLU 131	-0.00664	-0.00035	-0.01105	0.0003	0.0078	0.0004
37	SLU 132	-0.03327	-0.00035	-0.00712	0.0004	0.0135	0.0004
37	SLE RA 1	-0.00422	-0.00019	-0.00754	0.0003	0.0051	0.0004
37	SLE RA 2	-0.0279	-0.00019	-0.00404	0.0003	0.0102	0.0004
37	SLE RA 3	-0.0279	-0.00019	-0.00404	0.0003	0.0102	0.0005
37	SLE RA 4	-0.00422	-0.00019	-0.00754	0.0003	0.0051	0.0004
37	SLE RA 5	-0.02198	-0.00019	-0.00492	0.0003	0.0089	0.0005
37	SLE RA 6	-0.02818	-0.00019	-0.00418	0.0003	0.0103	0.0005
37	SLE RA 7	-0.02818	-0.00019	-0.00418	0.0003	0.0103	0.0005
37	SLE RA 8	-0.00451	-0.00019	-0.00768	0.0003	0.0053	0.0004
37	SLE RA 9	-0.02226	-0.00019	-0.00506	0.0003	0.0091	0.0005
37	SLE RA 10	-0.00479	-0.0002	-0.00782	0.0003	0.0054	0.0004
37	SLE RA 11	-0.02255	-0.0002	-0.0052	0.0003	0.0093	0.0005
37	SLE RA 12	-0.00479	-0.0002	-0.00782	0.0003	0.0054	0.0004
37	SLE RA 13	-0.02255	-0.0002	-0.0052	0.0003	0.0093	0.0005
37	SLE RA 14	-0.02809	-0.00021	-0.00432	0.0003	0.0104	0.0004
37	SLE RA 15	-0.02809	-0.00021	-0.00432	0.0003	0.0104	0.0004
37	SLE RA 16	-0.00442	-0.00021	-0.00782	0.0003	0.0053	0.0004
37	SLE RA 17	-0.02217	-0.00021	-0.0052	0.0003	0.0091	0.0004
37	SLE RA 18	-0.02837	-0.00022	-0.00446	0.0003	0.0106	0.0004
37	SLE RA 19	-0.02837	-0.00022	-0.00446	0.0003	0.0106	0.0004
37	SLE RA 20	-0.0047	-0.00022	-0.00796	0.0003	0.0055	0.0004
37	SLE RA 21	-0.02245	-0.00022	-0.00534	0.0003	0.0093	0.0004
37	SLE RA 22	-0.00499	-0.00022	-0.0081	0.0003	0.0057	0.0004
37	SLE RA 23	-0.02274	-0.00022	-0.00548	0.0003	0.0095	0.0004
37	SLE RA 24	-0.00499	-0.00022	-0.0081	0.0003	0.0057	0.0004
37	SLE RA 25	-0.02274	-0.00022	-0.00548	0.0003	0.0095	0.0004
37	SLE RA 26	-0.0047	-0.00025	-0.00823	0.0003	0.0057	0.0003
37	SLE RA 27	-0.02246	-0.00025	-0.00561	0.0003	0.0095	0.0003
37	SLE RA 28	-0.0047	-0.00025	-0.00823	0.0003	0.0057	0.0003
37	SLE RA 29	-0.02246	-0.00025	-0.00561	0.0003	0.0095	0.0003
37	SLE RA 30	-0.00499	-0.00026	-0.00837	0.0003	0.0059	0.0003
37	SLE RA 31	-0.02274	-0.00026	-0.00575	0.0003	0.0097	0.0003
37	SLE RA 32	-0.00499	-0.00026	-0.00837	0.0003	0.0059	0.0003
37	SLE RA 33	-0.02274	-0.00026	-0.00575	0.0003	0.0097	0.0003
37	SLE FR 1	-0.00422	-0.00019	-0.00754	0.0003	0.0051	0.0004
37	SLE FR 2	-0.02198	-0.00019	-0.00492	0.0003	0.0089	0.0004
37	SLE FR 3	-0.00422	-0.00019	-0.00754	0.0003	0.0051	0.0004
37	SLE FR 4	-0.00434	-0.00019	-0.0076	0.0003	0.0052	0.0004
37	SLE FR 5	-0.00442	-0.00021	-0.00782	0.0003	0.0053	0.0004
37	SLE QP 1	-0.00422	-0.00019	-0.00754	0.0003	0.0051	0.0004
37	SLO 1	-0.01418	-0.00041	-0.00321	-0.1093	0.0017	-0.2618

Nodo	Cont.	Spostamento			Rotazione		
Ind.	N.br.	ux	uy	uz	rx	ry	rz
37	SLO 2	-0.01418	-0.00041	-0.00321	-0.1093	0.0017	-0.2618
37	SLO 3	-0.01418	0.00004	-0.00321	0.1098	0.0017	0.2626
37	SLO 4	-0.01418	0.00004	-0.00321	0.1098	0.0017	0.2626
37	SLO 5	-0.00721	-0.00093	-0.00624	-0.3649	0.0041	-0.8736
37	SLO 6	-0.00721	-0.00093	-0.00624	-0.3649	0.0041	-0.8736
37	SLO 7	-0.00721	0.00055	-0.00624	0.3655	0.0041	0.8745
37	SLO 8	-0.00721	0.00055	-0.00624	0.3655	0.0041	0.8745
37	SLO 9	-0.00124	-0.00093	-0.00884	-0.3649	0.0061	-0.8736
37	SLO 10	-0.00124	-0.00093	-0.00884	-0.3649	0.0061	-0.8736
37	SLO 11	-0.00124	0.00055	-0.00884	0.3655	0.0061	0.8745
37	SLO 12	-0.00124	0.00055	-0.00884	0.3655	0.0061	0.8745
37	SLO 13	0.00573	-0.00041	-0.01188	-0.1093	0.0085	-0.2618
37	SLO 14	0.00573	-0.00041	-0.01188	-0.1093	0.0085	-0.2618
37	SLO 15	0.00573	0.00003	-0.01188	0.1098	0.0085	0.2626
37	SLO 16	0.00573	0.00003	-0.01188	0.1098	0.0085	0.2626
37	SLD 1	-0.01241	-0.00039	-0.00398	-0.101	0.0023	-0.2419
37	SLD 2	-0.01241	-0.00039	-0.00398	-0.101	0.0023	-0.2419
37	SLD 3	-0.01241	0.00002	-0.00398	0.1015	0.0023	0.2427
37	SLD 4	-0.01241	0.00002	-0.00398	0.1015	0.0023	0.2427
37	SLD 5	-0.00668	-0.00087	-0.00647	-0.3372	0.0042	-0.8072
37	SLD 6	-0.00668	-0.00087	-0.00647	-0.3372	0.0042	-0.8072
37	SLD 7	-0.00668	0.0005	-0.00647	0.3377	0.0042	0.808
37	SLD 8	-0.00668	0.0005	-0.00647	0.3377	0.0042	0.808
37	SLD 9	-0.00177	-0.00087	-0.00861	-0.3372	0.0059	-0.8072
37	SLD 10	-0.00177	-0.00087	-0.00861	-0.3372	0.0059	-0.8072
37	SLD 11	-0.00177	0.0005	-0.00861	0.3377	0.0059	0.808
37	SLD 12	-0.00177	0.0005	-0.00861	0.3377	0.0059	0.808
37	SLD 13	0.00396	-0.00039	-0.01111	-0.1009	0.0079	-0.2419
37	SLD 14	0.00396	-0.00039	-0.01111	-0.1009	0.0079	-0.2419
37	SLD 15	0.00396	0.00002	-0.01111	0.1015	0.0079	0.2427
37	SLD 16	0.00396	0.00002	-0.01111	0.1015	0.0079	0.2427
37	SLV 1	-0.02186	-0.00073	0.00014	-0.2667	-0.001	-0.6386
37	SLV 2	-0.02186	-0.00073	0.00014	-0.2667	-0.001	-0.6386
37	SLV 3	-0.02186	0.00036	0.00014	0.2673	-0.001	0.6394
37	SLV 4	-0.02186	0.00036	0.00014	0.2673	-0.001	0.6394
37	SLV 5	-0.00952	-0.00199	-0.00524	-0.8897	0.0033	-2.1296
37	SLV 6	-0.00952	-0.00199	-0.00524	-0.8897	0.0033	-2.1296
37	SLV 7	-0.00952	0.00162	-0.00524	0.8903	0.0033	2.1305
37	SLV 8	-0.00952	0.00162	-0.00524	0.8903	0.0033	2.1305
37	SLV 9	0.00107	-0.00199	-0.00985	-0.8897	0.0069	-2.1296
37	SLV 10	0.00107	-0.00199	-0.00985	-0.8897	0.0069	-2.1296
37	SLV 11	0.00107	0.00162	-0.00985	0.8903	0.0069	2.1305
37	SLV 12	0.00107	0.00162	-0.00985	0.8903	0.0069	2.1305
37	SLV 13	0.01342	-0.00073	-0.01523	-0.2667	0.0111	-0.6386
37	SLV 14	0.01342	-0.00073	-0.01523	-0.2667	0.0111	-0.6386
37	SLV 15	0.01342	0.00035	-0.01523	0.2673	0.0111	0.6394
37	SLV 16	0.01342	0.00035	-0.01523	0.2673	0.0111	0.6394
38	SLU 1	-0.00138	-0.00009	-0.02357	0	0.0081	0
38	SLU 2	-0.02471	-0.00007	-0.06362	0	0.0381	0
38	SLU 3	-0.02471	-0.00007	-0.06362	0	0.0381	0
38	SLU 4	-0.00138	-0.00009	-0.02357	0	0.0081	0
38	SLU 5	-0.01888	-0.00008	-0.0536	0	0.0306	0
38	SLU 6	-0.02491	-0.00008	-0.06472	0	0.0386	0
38	SLU 7	-0.02491	-0.00008	-0.06472	0	0.0386	0
38	SLU 8	-0.00158	-0.00009	-0.02467	0	0.0085	0
38	SLU 9	-0.01908	-0.00008	-0.05471	0	0.031	0
38	SLU 10	-0.00178	-0.0001	-0.02577	0	0.009	0
38	SLU 11	-0.01928	-0.00008	-0.05581	0	0.0315	0
38	SLU 12	-0.00178	-0.0001	-0.02577	0	0.009	0
38	SLU 13	-0.01928	-0.00008	-0.05581	0	0.0315	0
38	SLU 14	-0.02476	-0.00011	-0.06498	0.0001	0.0385	0
38	SLU 15	-0.02476	-0.00011	-0.06498	0.0001	0.0385	0
38	SLU 16	-0.00143	-0.00013	-0.02493	0.0001	0.0085	0
38	SLU 17	-0.01893	-0.00011	-0.05496	0.0001	0.031	0
38	SLU 18	-0.02496	-0.00011	-0.06608	0.0001	0.0389	0
38	SLU 19	-0.02496	-0.00011	-0.06608	0.0001	0.0389	0
38	SLU 20	-0.00163	-0.00013	-0.02603	0.0001	0.0089	0
38	SLU 21	-0.01913	-0.00011	-0.05607	0.0001	0.0314	0
38	SLU 22	-0.00183	-0.00013	-0.02713	0.0001	0.0093	0
38	SLU 23	-0.01933	-0.00012	-0.05717	0.0001	0.0319	0
38	SLU 24	-0.00183	-0.00013	-0.02713	0.0001	0.0093	0
38	SLU 25	-0.01933	-0.00012	-0.05717	0.0001	0.0319	0
38	SLU 26	-0.00151	-0.00018	-0.02696	0.0002	0.009	0
38	SLU 27	-0.01901	-0.00017	-0.057	0.0002	0.0315	0
38	SLU 28	-0.00151	-0.00018	-0.02696	0.0002	0.009	0
38	SLU 29	-0.01901	-0.00017	-0.057	0.0002	0.0315	0
38	SLU 30	-0.00171	-0.00018	-0.02807	0.0002	0.0094	0
38	SLU 31	-0.0192	-0.00017	-0.05811	0.0002	0.032	0
38	SLU 32	-0.00171	-0.00018	-0.02807	0.0002	0.0094	0
38	SLU 33	-0.0192	-0.00017	-0.05811	0.0002	0.032	0
38	SLU 34	-0.00138	-0.00009	-0.02357	0	0.0081	0
38	SLU 35	-0.02471	-0.00007	-0.06362	0	0.0381	0
38	SLU 36	-0.02471	-0.00007	-0.06362	0	0.0381	0
38	SLU 37	-0.00138	-0.00009	-0.02357	0	0.0081	0
38	SLU 38	-0.01888	-0.00008	-0.0536	0	0.0306	0
38	SLU 39	-0.02491	-0.00008	-0.06472	0	0.0386	0
38	SLU 40	-0.02491	-0.00008	-0.06472	0	0.0386	0
38	SLU 41	-0.00158	-0.00009	-0.02467	0	0.0085	0
38	SLU 42	-0.01908	-0.00008	-0.05471	0	0.031	0
38	SLU 43	-0.00178	-0.0001	-0.02577	0	0.009	0
38	SLU 44	-0.01928	-0.00008	-0.05581	0	0.0315	0
38	SLU 45	-0.00178	-0.0001	-0.02577	0	0.009	0
38	SLU 46	-0.01928	-0.00008	-0.05581	0	0.0315	0
38	SLU 47	-0.02476	-0.00011	-0.06498	0.0001	0.0385	0
38	SLU 48	-0.02476	-0.00011	-0.06498	0.0001	0.0385	0

Nodo	Cont.	Spostamento			Rotazione		
Ind.	N.br.	ux	uy	uz	rx	ry	rz
38	SLU 49	-0.00143	-0.00013	-0.02493	0.0001	0.0085	0
38	SLU 50	-0.01893	-0.00011	-0.05496	0.0001	0.031	0
38	SLU 51	-0.02496	-0.00011	-0.06608	0.0001	0.0389	0
38	SLU 52	-0.02496	-0.00011	-0.06608	0.0001	0.0389	0
38	SLU 53	-0.00163	-0.00013	-0.02603	0.0001	0.0089	0
38	SLU 54	-0.01913	-0.00011	-0.05607	0.0001	0.0314	0
38	SLU 55	-0.00183	-0.00013	-0.02713	0.0001	0.0093	0
38	SLU 56	-0.01933	-0.00012	-0.05717	0.0001	0.0319	0
38	SLU 57	-0.00183	-0.00013	-0.02713	0.0001	0.0093	0
38	SLU 58	-0.01933	-0.00012	-0.05717	0.0001	0.0319	0
38	SLU 59	-0.00151	-0.00018	-0.02696	0.0002	0.009	0
38	SLU 60	-0.01901	-0.00017	-0.057	0.0002	0.0315	0
38	SLU 61	-0.00151	-0.00018	-0.02696	0.0002	0.009	0
38	SLU 62	-0.01901	-0.00017	-0.057	0.0002	0.0315	0
38	SLU 63	-0.00171	-0.00018	-0.02807	0.0002	0.0094	0
38	SLU 64	-0.0192	-0.00017	-0.05811	0.0002	0.032	0
38	SLU 65	-0.00171	-0.00018	-0.02807	0.0002	0.0094	0
38	SLU 66	-0.0192	-0.00017	-0.05811	0.0002	0.032	0
38	SLU 67	-0.0018	-0.00012	-0.03064	0	0.0105	0
38	SLU 68	-0.02513	-0.0001	-0.07069	0	0.0405	0.0001
38	SLU 69	-0.02513	-0.0001	-0.07069	0	0.0405	0.0001
38	SLU 70	-0.0018	-0.00012	-0.03064	0	0.0105	0
38	SLU 71	-0.0193	-0.0001	-0.06067	0	0.033	0.0001
38	SLU 72	-0.02533	-0.00011	-0.07179	0	0.041	0.0001
38	SLU 73	-0.02533	-0.0001	-0.07179	0	0.041	0.0001
38	SLU 74	-0.002	-0.00012	-0.03174	0	0.011	0
38	SLU 75	-0.01949	-0.00011	-0.06178	0	0.0335	0.0001
38	SLU 76	-0.00219	-0.00013	-0.03284	0	0.0114	0
38	SLU 77	-0.01969	-0.00011	-0.06288	0	0.0339	0.0001
38	SLU 78	-0.00219	-0.00013	-0.03284	0	0.0114	0.0001
38	SLU 79	-0.01969	-0.00011	-0.06288	0	0.0339	0.0001
38	SLU 80	-0.02518	-0.00014	-0.07205	0.0001	0.0409	0.0001
38	SLU 81	-0.02518	-0.00014	-0.07205	0.0001	0.0409	0.0001
38	SLU 82	-0.00185	-0.00015	-0.032	0.0001	0.0109	0
38	SLU 83	-0.01935	-0.00014	-0.06203	0.0001	0.0334	0.0001
38	SLU 84	-0.02538	-0.00014	-0.07315	0.0001	0.0414	0.0001
38	SLU 85	-0.02538	-0.00014	-0.07315	0.0001	0.0414	0.0001
38	SLU 86	-0.00205	-0.00016	-0.0331	0.0001	0.0113	0.0001
38	SLU 87	-0.01954	-0.00014	-0.06314	0.0001	0.0338	0.0001
38	SLU 88	-0.00224	-0.00016	-0.0342	0.0001	0.0118	0.0001
38	SLU 89	-0.01974	-0.00015	-0.06424	0.0001	0.0343	0.0001
38	SLU 90	-0.00224	-0.00016	-0.0342	0.0001	0.0118	0.0001
38	SLU 91	-0.01974	-0.00015	-0.06424	0.0001	0.0343	0.0001
38	SLU 92	-0.00192	-0.00021	-0.03403	0.0002	0.0114	0.0001
38	SLU 93	-0.01942	-0.0002	-0.06407	0.0002	0.034	0.0001
38	SLU 94	-0.00192	-0.00021	-0.03403	0.0002	0.0114	0.0001
38	SLU 95	-0.01942	-0.00019	-0.06407	0.0002	0.034	0.0001
38	SLU 96	-0.00212	-0.00021	-0.03514	0.0002	0.0119	0.0001
38	SLU 97	-0.01962	-0.0002	-0.06518	0.0002	0.0344	0.0001
38	SLU 98	-0.00212	-0.00021	-0.03514	0.0002	0.0119	0.0001
38	SLU 99	-0.01962	-0.0002	-0.06518	0.0002	0.0344	0.0001
38	SLU 100	-0.0018	-0.00012	-0.03064	0	0.0105	0
38	SLU 101	-0.02513	-0.0001	-0.07069	0	0.0405	0.0001
38	SLU 102	-0.02513	-0.0001	-0.07069	0	0.0405	0.0001
38	SLU 103	-0.0018	-0.00012	-0.03064	0	0.0105	0
38	SLU 104	-0.0193	-0.0001	-0.06067	0	0.033	0.0001
38	SLU 105	-0.02533	-0.00011	-0.07179	0	0.041	0.0001
38	SLU 106	-0.02533	-0.0001	-0.07179	0	0.041	0.0001
38	SLU 107	-0.002	-0.00012	-0.03174	0	0.011	0
38	SLU 108	-0.01949	-0.00011	-0.06178	0	0.0335	0.0001
38	SLU 109	-0.00219	-0.00013	-0.03284	0	0.0114	0
38	SLU 110	-0.01969	-0.00011	-0.06288	0	0.0339	0.0001
38	SLU 111	-0.00219	-0.00013	-0.03284	0	0.0114	0.0001
38	SLU 112	-0.01969	-0.00011	-0.06288	0	0.0339	0.0001
38	SLU 113	-0.02518	-0.00014	-0.07205	0.0001	0.0409	0.0001
38	SLU 114	-0.02518	-0.00014	-0.07205	0.0001	0.0409	0.0001
38	SLU 115	-0.00185	-0.00015	-0.032	0.0001	0.0109	0
38	SLU 116	-0.01935	-0.00014	-0.06203	0.0001	0.0334	0.0001
38	SLU 117	-0.02538	-0.00014	-0.07315	0.0001	0.0414	0.0001
38	SLU 118	-0.02538	-0.00014	-0.07315	0.0001	0.0414	0.0001
38	SLU 119	-0.00205	-0.00016	-0.0331	0.0001	0.0113	0.0001
38	SLU 120	-0.01954	-0.00014	-0.06314	0.0001	0.0338	0.0001
38	SLU 121	-0.00224	-0.00016	-0.0342	0.0001	0.0118	0.0001
38	SLU 122	-0.01974	-0.00015	-0.06424	0.0001	0.0343	0.0001
38	SLU 123	-0.00224	-0.00016	-0.0342	0.0001	0.0118	0.0001
38	SLU 124	-0.01974	-0.00015	-0.06424	0.0001	0.0343	0.0001
38	SLU 125	-0.00192	-0.00021	-0.03403	0.0002	0.0114	0.0001
38	SLU 126	-0.01942	-0.0002	-0.06407	0.0002	0.034	0.0001
38	SLU 127	-0.00192	-0.00021	-0.03403	0.0002	0.0114	0.0001
38	SLU 128	-0.01942	-0.00019	-0.06407	0.0002	0.034	0.0001
38	SLU 129	-0.00212	-0.00021	-0.03514	0.0002	0.0119	0.0001
38	SLU 130	-0.01962	-0.0002	-0.06518	0.0002	0.0344	0.0001
38	SLU 131	-0.00212	-0.00021	-0.03514	0.0002	0.0119	0.0001
38	SLU 132	-0.01962	-0.0002	-0.06518	0.0002	0.0344	0.0001
38	SLE RA 1	-0.00138	-0.00009	-0.02357	0	0.0081	0
38	SLE RA 2	-0.01694	-0.00008	-0.05027	0	0.0281	0
38	SLE RA 3	-0.01694	-0.00008	-0.05027	0	0.0281	0
38	SLE RA 4	-0.00138	-0.00009	-0.02357	0	0.0081	0
38	SLE RA 5	-0.01305	-0.00008	-0.04359	0	0.0231	0
38	SLE RA 6	-0.01707	-0.00008	-0.051	0	0.0284	0
38	SLE RA 7	-0.01707	-0.00008	-0.051	0	0.0284	0
38	SLE RA 8	-0.00151	-0.00009	-0.0243	0	0.0084	0
38	SLE RA 9	-0.01318	-0.00008	-0.04433	0	0.0234	0
38	SLE RA 10	-0.00165	-0.0001	-0.02504	0	0.0087	0
38	SLE RA 11	-0.01331	-0.00009	-0.04506	0	0.0237	0

Nodo	Cont.	Spostamento			Rotazione		
Ind.	N.br.	ux	uy	uz	rx	ry	rz
38	SLE RA 12	-0.00165	-0.0001	-0.02504	0	0.0087	0
38	SLE RA 13	-0.01331	-0.00009	-0.04506	0	0.0237	0
38	SLE RA 14	-0.01697	-0.0001	-0.05117	0.0001	0.0284	0
38	SLE RA 15	-0.01697	-0.0001	-0.05117	0.0001	0.0284	0
38	SLE RA 16	-0.00142	-0.00011	-0.02447	0	0.0083	0
38	SLE RA 17	-0.01308	-0.0001	-0.0445	0.0001	0.0234	0
38	SLE RA 18	-0.0171	-0.00011	-0.05191	0.0001	0.0286	0
38	SLE RA 19	-0.0171	-0.0001	-0.05191	0.0001	0.0286	0
38	SLE RA 20	-0.00155	-0.00012	-0.02521	0	0.0086	0
38	SLE RA 21	-0.01321	-0.00011	-0.04523	0.0001	0.0236	0
38	SLE RA 22	-0.00168	-0.00012	-0.02594	0.0001	0.0089	0
38	SLE RA 23	-0.01334	-0.00011	-0.04597	0.0001	0.0239	0
38	SLE RA 24	-0.00168	-0.00012	-0.02594	0.0001	0.0089	0
38	SLE RA 25	-0.01334	-0.00011	-0.04597	0.0001	0.0239	0
38	SLE RA 26	-0.00147	-0.00015	-0.02583	0.0001	0.0087	0
38	SLE RA 27	-0.01313	-0.00014	-0.04586	0.0001	0.0237	0
38	SLE RA 28	-0.00147	-0.00015	-0.02583	0.0001	0.0087	0
38	SLE RA 29	-0.01313	-0.00014	-0.04586	0.0001	0.0237	0
38	SLE RA 30	-0.0016	-0.00015	-0.02657	0.0001	0.009	0
38	SLE RA 31	-0.01326	-0.00014	-0.04659	0.0001	0.024	0
38	SLE RA 32	-0.0016	-0.00015	-0.02657	0.0001	0.009	0
38	SLE RA 33	-0.01326	-0.00014	-0.04659	0.0001	0.024	0
38	SLE FR 1	-0.00138	-0.00009	-0.02357	0	0.0081	0
38	SLE FR 2	-0.01305	-0.00008	-0.04359	0	0.0231	0
38	SLE FR 3	-0.00138	-0.00009	-0.02357	0	0.0081	0
38	SLE FR 4	-0.00144	-0.00009	-0.02386	0	0.0082	0
38	SLE FR 5	-0.00142	-0.00012	-0.02447	0.0001	0.0083	0
38	SLE QP 1	-0.00138	-0.00009	-0.02357	0	0.0081	0
38	SLO 1	-0.01098	-0.00225	-0.0151	0.23	0.009	-0.0023
38	SLO 2	-0.01098	-0.00225	-0.0151	0.23	0.009	-0.0023
38	SLO 3	-0.01098	0.00208	-0.0151	-0.2299	0.009	0.0024
38	SLO 4	-0.01098	0.00208	-0.0151	-0.2299	0.009	0.0024
38	SLO 5	-0.00426	-0.00731	-0.02103	0.7666	0.0084	-0.0077
38	SLO 6	-0.00426	-0.00731	-0.02103	0.7666	0.0084	-0.0077
38	SLO 7	-0.00426	0.00713	-0.02103	-0.7666	0.0084	0.0078
38	SLO 8	-0.00426	0.00713	-0.02103	-0.7666	0.0084	0.0078
38	SLO 9	0.0015	-0.00731	-0.02611	0.7666	0.0078	-0.0077
38	SLO 10	0.0015	-0.00731	-0.02611	0.7666	0.0078	-0.0077
38	SLO 11	0.0015	0.00712	-0.02611	-0.7666	0.0078	0.0078
38	SLO 12	0.0015	0.00712	-0.02611	-0.7666	0.0078	0.0078
38	SLO 13	0.00821	-0.00227	-0.03204	0.23	0.0071	-0.0023
38	SLO 14	0.00821	-0.00227	-0.03204	0.23	0.0071	-0.0023
38	SLO 15	0.00821	0.00206	-0.03204	-0.23	0.0071	0.0024
38	SLO 16	0.00821	0.00206	-0.03204	-0.23	0.0071	0.0024
38	SLD 1	-0.00927	-0.00209	-0.0166	0.2125	0.0089	-0.0021
38	SLD 2	-0.00927	-0.00209	-0.0166	0.2125	0.0089	-0.0021
38	SLD 3	-0.00927	0.00191	-0.0166	-0.2125	0.0089	0.0022
38	SLD 4	-0.00927	0.00191	-0.0166	-0.2125	0.0089	0.0022
38	SLD 5	-0.00375	-0.00676	-0.02148	0.7083	0.0083	-0.0072
38	SLD 6	-0.00375	-0.00676	-0.02148	0.7083	0.0083	-0.0072
38	SLD 7	-0.00375	0.00658	-0.02148	-0.7083	0.0083	0.0072
38	SLD 8	-0.00375	0.00658	-0.02148	-0.7083	0.0083	0.0072
38	SLD 9	0.00098	-0.00676	-0.02566	0.7083	0.0079	-0.0072
38	SLD 10	0.00098	-0.00676	-0.02566	0.7083	0.0079	-0.0072
38	SLD 11	0.00098	0.00657	-0.02566	-0.7083	0.0079	0.0072
38	SLD 12	0.00098	0.00657	-0.02566	-0.7083	0.0079	0.0072
38	SLD 13	0.00651	-0.0021	-0.03053	0.2125	0.0073	-0.0021
38	SLD 14	0.00651	-0.0021	-0.03053	0.2125	0.0073	-0.0021
38	SLD 15	0.00651	0.0019	-0.03053	-0.2125	0.0073	0.0022
38	SLD 16	0.00651	0.0019	-0.03053	-0.2125	0.0073	0.0022
38	SLV 1	-0.01838	-0.00535	-0.00856	0.5605	0.0098	-0.0056
38	SLV 2	-0.01838	-0.00535	-0.00856	0.5605	0.0098	-0.0056
38	SLV 3	-0.01838	0.0052	-0.00856	-0.5604	0.0098	0.0057
38	SLV 4	-0.01838	0.0052	-0.00856	-0.5604	0.0098	0.0057
38	SLV 5	-0.00648	-0.01768	-0.01906	1.8682	0.0086	-0.0189
38	SLV 6	-0.00648	-0.01768	-0.01906	1.8682	0.0086	-0.0189
38	SLV 7	-0.00648	0.0175	-0.01906	-1.8682	0.0086	0.019
38	SLV 8	-0.00648	0.0175	-0.01906	-1.8682	0.0086	0.019
38	SLV 9	0.00372	-0.01769	-0.02807	1.8682	0.0076	-0.0189
38	SLV 10	0.00372	-0.01769	-0.02807	1.8682	0.0076	-0.0189
38	SLV 11	0.00372	0.01749	-0.02807	-1.8682	0.0076	0.019
38	SLV 12	0.00372	0.01749	-0.02807	-1.8682	0.0076	0.019
38	SLV 13	0.01562	-0.00539	-0.03857	0.5604	0.0064	-0.0057
38	SLV 14	0.01562	-0.00539	-0.03857	0.5604	0.0064	-0.0057
38	SLV 15	0.01562	0.00517	-0.03857	-0.5605	0.0064	0.0057
38	SLV 16	0.01562	0.00517	-0.03857	-0.5605	0.0064	0.0057
39	SLU 1	0.00138	-0.00009	-0.02357	0	-0.0081	0
39	SLU 2	0.02471	-0.00007	-0.06362	0	-0.0381	0
39	SLU 3	0.02471	-0.00007	-0.06362	0	-0.0381	0
39	SLU 4	0.00138	-0.00009	-0.02357	0	-0.0081	0
39	SLU 5	0.01888	-0.00008	-0.0536	0	-0.0306	0
39	SLU 6	0.02491	-0.00008	-0.06472	0	-0.0386	0
39	SLU 7	0.02491	-0.00008	-0.06472	0	-0.0386	0
39	SLU 8	0.00158	-0.00009	-0.02467	0	-0.0085	0
39	SLU 9	0.01908	-0.00008	-0.05471	0	-0.031	0
39	SLU 10	0.00178	-0.0001	-0.02577	0	-0.009	0
39	SLU 11	0.01928	-0.00008	-0.05581	0	-0.0315	0
39	SLU 12	0.00178	-0.0001	-0.02577	0	-0.009	0
39	SLU 13	0.01928	-0.00008	-0.05581	0	-0.0315	0
39	SLU 14	0.02477	-0.00011	-0.06498	0.0001	-0.0385	0
39	SLU 15	0.02477	-0.00011	-0.06498	0.0001	-0.0385	0
39	SLU 16	0.00143	-0.00013	-0.02492	0.0001	-0.0085	0
39	SLU 17	0.01893	-0.00011	-0.05496	0.0001	-0.031	0
39	SLU 18	0.02496	-0.00011	-0.06608	0.0001	-0.0389	0
39	SLU 19	0.02496	-0.00011	-0.06608	0.0001	-0.0389	0

Nodo	Cont.	Spostamento			Rotazione		
Ind.	N.br.	ux	uy	uz	rx	ry	rz
39	SLU 20	0.00163	-0.00013	-0.02603	0.0001	-0.0089	0
39	SLU 21	0.01913	-0.00011	-0.05606	0.0001	-0.0314	0
39	SLU 22	0.00183	-0.00013	-0.02713	0.0001	-0.0093	0
39	SLU 23	0.01933	-0.00012	-0.05717	0.0001	-0.0319	0
39	SLU 24	0.00183	-0.00013	-0.02713	0.0001	-0.0093	0
39	SLU 25	0.01933	-0.00012	-0.05717	0.0001	-0.0319	0
39	SLU 26	0.00151	-0.00018	-0.02696	0.0002	-0.009	0
39	SLU 27	0.01901	-0.00017	-0.057	0.0002	-0.0315	0
39	SLU 28	0.00151	-0.00018	-0.02696	0.0002	-0.009	0
39	SLU 29	0.01901	-0.00017	-0.057	0.0002	-0.0315	0
39	SLU 30	0.00171	-0.00018	-0.02806	0.0002	-0.0094	0
39	SLU 31	0.01921	-0.00017	-0.0581	0.0002	-0.032	0
39	SLU 32	0.00171	-0.00018	-0.02806	0.0002	-0.0094	0
39	SLU 33	0.01921	-0.00017	-0.0581	0.0002	-0.032	0
39	SLU 34	0.00138	-0.00009	-0.02357	0	-0.0081	0
39	SLU 35	0.02471	-0.00007	-0.06362	0	-0.0381	0
39	SLU 36	0.02471	-0.00007	-0.06362	0	-0.0381	0
39	SLU 37	0.00138	-0.00009	-0.02357	0	-0.0081	0
39	SLU 38	0.01888	-0.00008	-0.0536	0	-0.0306	0
39	SLU 39	0.02491	-0.00008	-0.06472	0	-0.0386	0
39	SLU 40	0.02491	-0.00008	-0.06472	0	-0.0386	0
39	SLU 41	0.00158	-0.00009	-0.02467	0	-0.0085	0
39	SLU 42	0.01908	-0.00008	-0.05471	0	-0.031	0
39	SLU 43	0.00178	-0.0001	-0.02577	0	-0.009	0
39	SLU 44	0.01928	-0.00008	-0.05581	0	-0.0315	0
39	SLU 45	0.00178	-0.0001	-0.02577	0	-0.009	0
39	SLU 46	0.01928	-0.00008	-0.05581	0	-0.0315	0
39	SLU 47	0.02477	-0.00011	-0.06498	0.0001	-0.0385	0
39	SLU 48	0.02477	-0.00011	-0.06498	0.0001	-0.0385	0
39	SLU 49	0.00143	-0.00013	-0.02492	0.0001	-0.0085	0
39	SLU 50	0.01893	-0.00011	-0.05496	0.0001	-0.031	0
39	SLU 51	0.02496	-0.00011	-0.06608	0.0001	-0.0389	0
39	SLU 52	0.02496	-0.00011	-0.06608	0.0001	-0.0389	0
39	SLU 53	0.00163	-0.00013	-0.02603	0.0001	-0.0089	0
39	SLU 54	0.01913	-0.00011	-0.05606	0.0001	-0.0314	0
39	SLU 55	0.00183	-0.00013	-0.02713	0.0001	-0.0093	0
39	SLU 56	0.01933	-0.00012	-0.05717	0.0001	-0.0319	0
39	SLU 57	0.00183	-0.00013	-0.02713	0.0001	-0.0093	0
39	SLU 58	0.01933	-0.00012	-0.05717	0.0001	-0.0319	0
39	SLU 59	0.00151	-0.00018	-0.02696	0.0002	-0.009	0
39	SLU 60	0.01901	-0.00017	-0.057	0.0002	-0.0315	0
39	SLU 61	0.00151	-0.00018	-0.02696	0.0002	-0.009	0
39	SLU 62	0.01901	-0.00017	-0.057	0.0002	-0.0315	0
39	SLU 63	0.00171	-0.00018	-0.02806	0.0002	-0.0094	0
39	SLU 64	0.01921	-0.00017	-0.0581	0.0002	-0.032	0
39	SLU 65	0.00171	-0.00018	-0.02806	0.0002	-0.0094	0
39	SLU 66	0.01921	-0.00017	-0.0581	0.0002	-0.032	0
39	SLU 67	0.0018	-0.00012	-0.03064	0	-0.0105	0
39	SLU 68	0.02513	-0.0001	-0.07069	0	-0.0405	-0.0001
39	SLU 69	0.02513	-0.0001	-0.07069	0	-0.0405	-0.0001
39	SLU 70	0.0018	-0.00012	-0.03064	0	-0.0105	0
39	SLU 71	0.0193	-0.0001	-0.06067	0	-0.033	-0.0001
39	SLU 72	0.02533	-0.00011	-0.07179	0	-0.041	-0.0001
39	SLU 73	0.02533	-0.0001	-0.07179	0	-0.041	-0.0001
39	SLU 74	0.002	-0.00012	-0.03174	0	-0.011	0
39	SLU 75	0.01949	-0.00011	-0.06178	0	-0.0335	-0.0001
39	SLU 76	0.00219	-0.00013	-0.03284	0	-0.0114	0
39	SLU 77	0.01969	-0.00011	-0.06288	0	-0.0339	-0.0001
39	SLU 78	0.00219	-0.00013	-0.03284	0	-0.0114	-0.0001
39	SLU 79	0.01969	-0.00011	-0.06288	0	-0.0339	-0.0001
39	SLU 80	0.02518	-0.00014	-0.07204	0.0001	-0.0409	-0.0001
39	SLU 81	0.02518	-0.00014	-0.07204	0.0001	-0.0409	-0.0001
39	SLU 82	0.00185	-0.00015	-0.03199	0.0001	-0.0109	0
39	SLU 83	0.01935	-0.00014	-0.06203	0.0001	-0.0334	-0.0001
39	SLU 84	0.02538	-0.00014	-0.07315	0.0001	-0.0414	-0.0001
39	SLU 85	0.02538	-0.00014	-0.07315	0.0001	-0.0414	-0.0001
39	SLU 86	0.00205	-0.00016	-0.0331	0.0001	-0.0113	-0.0001
39	SLU 87	0.01955	-0.00014	-0.06313	0.0001	-0.0338	-0.0001
39	SLU 88	0.00225	-0.00016	-0.0342	0.0001	-0.0118	-0.0001
39	SLU 89	0.01974	-0.00015	-0.06424	0.0001	-0.0343	-0.0001
39	SLU 90	0.00225	-0.00016	-0.0342	0.0001	-0.0118	-0.0001
39	SLU 91	0.01974	-0.00015	-0.06424	0.0001	-0.0343	-0.0001
39	SLU 92	0.00193	-0.00021	-0.03403	0.0002	-0.0114	-0.0001
39	SLU 93	0.01943	-0.0002	-0.06407	0.0002	-0.034	-0.0001
39	SLU 94	0.00193	-0.00021	-0.03403	0.0002	-0.0114	-0.0001
39	SLU 95	0.01943	-0.00019	-0.06407	0.0002	-0.034	-0.0001
39	SLU 96	0.00213	-0.00021	-0.03513	0.0002	-0.0119	-0.0001
39	SLU 97	0.01962	-0.0002	-0.06517	0.0002	-0.0344	-0.0001
39	SLU 98	0.00213	-0.00021	-0.03513	0.0002	-0.0119	-0.0001
39	SLU 99	0.01962	-0.0002	-0.06517	0.0002	-0.0344	-0.0001
39	SLU 100	0.0018	-0.00012	-0.03064	0	-0.0105	0
39	SLU 101	0.02513	-0.0001	-0.07069	0	-0.0405	-0.0001
39	SLU 102	0.02513	-0.0001	-0.07069	0	-0.0405	-0.0001
39	SLU 103	0.0018	-0.00012	-0.03064	0	-0.0105	0
39	SLU 104	0.0193	-0.0001	-0.06067	0	-0.033	-0.0001
39	SLU 105	0.02533	-0.00011	-0.07179	0	-0.041	-0.0001
39	SLU 106	0.02533	-0.0001	-0.07179	0	-0.041	-0.0001
39	SLU 107	0.002	-0.00012	-0.03174	0	-0.011	0
39	SLU 108	0.01949	-0.00011	-0.06178	0	-0.0335	-0.0001
39	SLU 109	0.00219	-0.00013	-0.03284	0	-0.0114	0
39	SLU 110	0.01969	-0.00011	-0.06288	0	-0.0339	-0.0001
39	SLU 111	0.00219	-0.00013	-0.03284	0	-0.0114	-0.0001
39	SLU 112	0.01969	-0.00011	-0.06288	0	-0.0339	-0.0001
39	SLU 113	0.02518	-0.00014	-0.07204	0.0001	-0.0409	-0.0001
39	SLU 114	0.02518	-0.00014	-0.07204	0.0001	-0.0409	-0.0001

Nodo	Cont.	Spostamento			Rotazione		
Ind.	N.br.	ux	uy	uz	rx	ry	rz
39	SLU 115	0.00185	-0.00015	-0.03199	0.0001	-0.0109	0
39	SLU 116	0.01935	-0.00014	-0.06203	0.0001	-0.0334	-0.0001
39	SLU 117	0.02538	-0.00014	-0.07315	0.0001	-0.0414	-0.0001
39	SLU 118	0.02538	-0.00014	-0.07315	0.0001	-0.0414	-0.0001
39	SLU 119	0.00205	-0.00016	-0.0331	0.0001	-0.0113	-0.0001
39	SLU 120	0.01955	-0.00014	-0.06313	0.0001	-0.0338	-0.0001
39	SLU 121	0.00225	-0.00016	-0.0342	0.0001	-0.0118	-0.0001
39	SLU 122	0.01974	-0.00015	-0.06424	0.0001	-0.0343	-0.0001
39	SLU 123	0.00225	-0.00016	-0.0342	0.0001	-0.0118	-0.0001
39	SLU 124	0.01974	-0.00015	-0.06424	0.0001	-0.0343	-0.0001
39	SLU 125	0.00193	-0.00021	-0.03403	0.0002	-0.0114	-0.0001
39	SLU 126	0.01943	-0.0002	-0.06407	0.0002	-0.034	-0.0001
39	SLU 127	0.00193	-0.00021	-0.03403	0.0002	-0.0114	-0.0001
39	SLU 128	0.01943	-0.00019	-0.06407	0.0002	-0.034	-0.0001
39	SLU 129	0.00213	-0.00021	-0.03513	0.0002	-0.0119	-0.0001
39	SLU 130	0.01962	-0.0002	-0.06517	0.0002	-0.0344	-0.0001
39	SLU 131	0.00213	-0.00021	-0.03513	0.0002	-0.0119	-0.0001
39	SLU 132	0.01962	-0.0002	-0.06517	0.0002	-0.0344	-0.0001
39	SLE RA 1	0.00138	-0.00009	-0.02357	0	-0.0081	0
39	SLE RA 2	0.01694	-0.00008	-0.05027	0	-0.0281	0
39	SLE RA 3	0.01694	-0.00008	-0.05027	0	-0.0281	0
39	SLE RA 4	0.00138	-0.00009	-0.02357	0	-0.0081	0
39	SLE RA 5	0.01305	-0.00008	-0.04359	0	-0.0231	0
39	SLE RA 6	0.01707	-0.00008	-0.051	0	-0.0284	0
39	SLE RA 7	0.01707	-0.00008	-0.051	0	-0.0284	0
39	SLE RA 8	0.00152	-0.00009	-0.0243	0	-0.0084	0
39	SLE RA 9	0.01318	-0.00008	-0.04433	0	-0.0234	0
39	SLE RA 10	0.00165	-0.0001	-0.02504	0	-0.0087	0
39	SLE RA 11	0.01331	-0.00009	-0.04506	0	-0.0237	0
39	SLE RA 12	0.00165	-0.0001	-0.02504	0	-0.0087	0
39	SLE RA 13	0.01331	-0.00009	-0.04506	0	-0.0237	0
39	SLE RA 14	0.01697	-0.0001	-0.05117	0.0001	-0.0284	0
39	SLE RA 15	0.01697	-0.0001	-0.05117	0.0001	-0.0284	0
39	SLE RA 16	0.00142	-0.00011	-0.02447	0	-0.0083	0
39	SLE RA 17	0.01308	-0.0001	-0.0445	0.0001	-0.0234	0
39	SLE RA 18	0.0171	-0.00011	-0.05191	0.0001	-0.0286	0
39	SLE RA 19	0.0171	-0.0001	-0.05191	0.0001	-0.0286	0
39	SLE RA 20	0.00155	-0.00012	-0.02521	0	-0.0086	0
39	SLE RA 21	0.01322	-0.00011	-0.04523	0.0001	-0.0236	0
39	SLE RA 22	0.00168	-0.00012	-0.02594	0.0001	-0.0089	0
39	SLE RA 23	0.01335	-0.00011	-0.04597	0.0001	-0.0239	0
39	SLE RA 24	0.00168	-0.00012	-0.02594	0.0001	-0.0089	0
39	SLE RA 25	0.01335	-0.00011	-0.04597	0.0001	-0.0239	0
39	SLE RA 26	0.00147	-0.00015	-0.02583	0.0001	-0.0087	0
39	SLE RA 27	0.01313	-0.00014	-0.04585	0.0001	-0.0237	0
39	SLE RA 28	0.00147	-0.00015	-0.02583	0.0001	-0.0087	0
39	SLE RA 29	0.01313	-0.00014	-0.04585	0.0001	-0.0237	0
39	SLE RA 30	0.0016	-0.00015	-0.02656	0.0001	-0.009	0
39	SLE RA 31	0.01327	-0.00014	-0.04659	0.0001	-0.024	0
39	SLE RA 32	0.0016	-0.00015	-0.02656	0.0001	-0.009	0
39	SLE RA 33	0.01327	-0.00014	-0.04659	0.0001	-0.024	0
39	SLE FR 1	0.00138	-0.00009	-0.02357	0	-0.0081	0
39	SLE FR 2	0.01305	-0.00008	-0.04359	0	-0.0231	0
39	SLE FR 3	0.00138	-0.00009	-0.02357	0	-0.0081	0
39	SLE FR 4	0.00144	-0.00009	-0.02386	0	-0.0082	0
39	SLE FR 5	0.00142	-0.00012	-0.02447	0.0001	-0.0083	0
39	SLE QP 1	0.00138	-0.00009	-0.02357	0	-0.0081	0
39	SLO 1	-0.00821	-0.00227	-0.03204	0.23	-0.0071	0.0023
39	SLO 2	-0.00821	-0.00227	-0.03204	0.23	-0.0071	0.0023
39	SLO 3	-0.00821	0.00206	-0.03204	-0.23	-0.0071	-0.0024
39	SLO 4	-0.00821	0.00206	-0.03204	-0.23	-0.0071	-0.0024
39	SLO 5	-0.0015	-0.00731	-0.02611	0.7666	-0.0078	0.0077
39	SLO 6	-0.0015	-0.00731	-0.02611	0.7666	-0.0078	0.0077
39	SLO 7	-0.0015	0.00712	-0.02611	-0.7666	-0.0078	-0.0078
39	SLO 8	-0.0015	0.00712	-0.02611	-0.7666	-0.0078	-0.0078
39	SLO 9	0.00426	-0.00731	-0.02103	0.7666	-0.0084	0.0077
39	SLO 10	0.00426	-0.00731	-0.02103	0.7666	-0.0084	0.0077
39	SLO 11	0.00426	0.00713	-0.02103	-0.7666	-0.0084	-0.0078
39	SLO 12	0.00426	0.00713	-0.02103	-0.7666	-0.0084	-0.0078
39	SLO 13	0.01098	-0.00225	-0.0151	0.23	-0.009	0.0023
39	SLO 14	0.01098	-0.00225	-0.0151	0.23	-0.009	0.0023
39	SLO 15	0.01098	0.00208	-0.0151	-0.2299	-0.009	-0.0024
39	SLO 16	0.01098	0.00208	-0.0151	-0.2299	-0.009	-0.0024
39	SLD 1	-0.00651	-0.0021	-0.03053	0.2125	-0.0073	0.0021
39	SLD 2	-0.00651	-0.0021	-0.03053	0.2125	-0.0073	0.0021
39	SLD 3	-0.00651	0.0019	-0.03053	-0.2125	-0.0073	-0.0022
39	SLD 4	-0.00651	0.0019	-0.03053	-0.2125	-0.0073	-0.0022
39	SLD 5	-0.00098	-0.00676	-0.02566	0.7083	-0.0079	0.0072
39	SLD 6	-0.00098	-0.00676	-0.02566	0.7083	-0.0079	0.0072
39	SLD 7	-0.00098	0.00657	-0.02566	-0.7083	-0.0079	-0.0072
39	SLD 8	-0.00098	0.00657	-0.02566	-0.7083	-0.0079	-0.0072
39	SLD 9	0.00375	-0.00676	-0.02148	0.7083	-0.0083	0.0072
39	SLD 10	0.00375	-0.00676	-0.02148	0.7083	-0.0083	0.0072
39	SLD 11	0.00375	0.00658	-0.02148	-0.7083	-0.0083	-0.0072
39	SLD 12	0.00375	0.00658	-0.02148	-0.7083	-0.0083	-0.0072
39	SLD 13	0.00927	-0.00209	-0.0166	0.2125	-0.0089	0.0021
39	SLD 14	0.00927	-0.00209	-0.0166	0.2125	-0.0089	0.0021
39	SLD 15	0.00927	0.00191	-0.0166	-0.2125	-0.0089	-0.0022
39	SLD 16	0.00927	0.00191	-0.0166	-0.2125	-0.0089	-0.0022
39	SLV 1	-0.01562	-0.00539	-0.03857	0.5604	-0.0064	0.0057
39	SLV 2	-0.01562	-0.00539	-0.03857	0.5604	-0.0064	0.0057
39	SLV 3	-0.01562	0.00517	-0.03857	-0.5605	-0.0064	-0.0057
39	SLV 4	-0.01562	0.00517	-0.03857	-0.5605	-0.0064	-0.0057
39	SLV 5	-0.00372	-0.01769	-0.02807	1.8682	-0.0076	0.0189
39	SLV 6	-0.00372	-0.01769	-0.02807	1.8682	-0.0076	0.0189

Nodo	Cont.	Spostamento			Rotazione		
Ind.	N.br.	ux	uy	uz	rx	ry	rz
39	SLV 7	-0.00372	0.01749	-0.02807	-1.8682	-0.0076	-0.019
39	SLV 8	-0.00372	0.01749	-0.02807	-1.8682	-0.0076	-0.019
39	SLV 9	0.00648	-0.01768	-0.01906	1.8682	-0.0086	0.0189
39	SLV 10	0.00648	-0.01768	-0.01906	1.8682	-0.0086	0.0189
39	SLV 11	0.00648	0.0175	-0.01906	-1.8682	-0.0086	-0.019
39	SLV 12	0.00648	0.0175	-0.01906	-1.8682	-0.0086	-0.019
39	SLV 13	0.01838	-0.00535	-0.00856	0.5605	-0.0098	0.0056
39	SLV 14	0.01838	-0.00535	-0.00856	0.5605	-0.0098	0.0056
39	SLV 15	0.01838	0.0052	-0.00856	-0.5604	-0.0098	-0.0057
39	SLV 16	0.01838	0.0052	-0.00856	-0.5604	-0.0098	-0.0057
40	SLU 1	0.00422	-0.00019	-0.00754	0.0003	-0.0051	-0.0004
40	SLU 2	0.03973	-0.00019	-0.00229	0.0003	-0.0127	-0.0005
40	SLU 3	0.03973	-0.00019	-0.00229	0.0003	-0.0127	-0.0005
40	SLU 4	0.00422	-0.00019	-0.00754	0.0003	-0.0051	-0.0004
40	SLU 5	0.03085	-0.00019	-0.00361	0.0003	-0.0108	-0.0005
40	SLU 6	0.04016	-0.00019	-0.00251	0.0003	-0.013	-0.0005
40	SLU 7	0.04016	-0.00019	-0.00251	0.0003	-0.013	-0.0005
40	SLU 8	0.00465	-0.00019	-0.00775	0.0003	-0.0053	-0.0005
40	SLU 9	0.03128	-0.00019	-0.00382	0.0003	-0.0111	-0.0005
40	SLU 10	0.00508	-0.0002	-0.00796	0.0003	-0.0056	-0.0004
40	SLU 11	0.03171	-0.0002	-0.00403	0.0003	-0.0113	-0.0005
40	SLU 12	0.00508	-0.0002	-0.00796	0.0003	-0.0056	-0.0005
40	SLU 13	0.03171	-0.0002	-0.00403	0.0003	-0.0113	-0.0005
40	SLU 14	0.04002	-0.00023	-0.00271	0.0003	-0.0131	-0.0004
40	SLU 15	0.04002	-0.00023	-0.00271	0.0003	-0.0131	-0.0004
40	SLU 16	0.00451	-0.00023	-0.00796	0.0003	-0.0054	-0.0004
40	SLU 17	0.03114	-0.00023	-0.00402	0.0003	-0.0112	-0.0004
40	SLU 18	0.04045	-0.00023	-0.00292	0.0003	-0.0133	-0.0004
40	SLU 19	0.04045	-0.00023	-0.00292	0.0003	-0.0133	-0.0004
40	SLU 20	0.00494	-0.00023	-0.00817	0.0003	-0.0057	-0.0004
40	SLU 21	0.03157	-0.00023	-0.00423	0.0003	-0.0114	-0.0004
40	SLU 22	0.00537	-0.00024	-0.00838	0.0003	-0.006	-0.0004
40	SLU 23	0.032	-0.00024	-0.00444	0.0003	-0.0117	-0.0004
40	SLU 24	0.00537	-0.00024	-0.00838	0.0003	-0.006	-0.0004
40	SLU 25	0.032	-0.00024	-0.00444	0.0003	-0.0117	-0.0004
40	SLU 26	0.00495	-0.00029	-0.00858	0.0002	-0.006	-0.0002
40	SLU 27	0.03158	-0.00029	-0.00464	0.0003	-0.0117	-0.0002
40	SLU 28	0.00495	-0.00029	-0.00858	0.0003	-0.006	-0.0002
40	SLU 29	0.03158	-0.00029	-0.00464	0.0003	-0.0117	-0.0002
40	SLU 30	0.00537	-0.00029	-0.00879	0.0003	-0.0062	-0.0002
40	SLU 31	0.03201	-0.00029	-0.00485	0.0003	-0.012	-0.0002
40	SLU 32	0.00537	-0.00029	-0.00879	0.0003	-0.0062	-0.0002
40	SLU 33	0.03201	-0.00029	-0.00485	0.0003	-0.012	-0.0003
40	SLU 34	0.00422	-0.00019	-0.00754	0.0003	-0.0051	-0.0004
40	SLU 35	0.03973	-0.00019	-0.00229	0.0003	-0.0127	-0.0005
40	SLU 36	0.03973	-0.00019	-0.00229	0.0003	-0.0127	-0.0005
40	SLU 37	0.00422	-0.00019	-0.00754	0.0003	-0.0051	-0.0004
40	SLU 38	0.03085	-0.00019	-0.00361	0.0003	-0.0108	-0.0005
40	SLU 39	0.04016	-0.00019	-0.00251	0.0003	-0.013	-0.0005
40	SLU 40	0.04016	-0.00019	-0.00251	0.0003	-0.013	-0.0005
40	SLU 41	0.00465	-0.00019	-0.00775	0.0003	-0.0053	-0.0005
40	SLU 42	0.03128	-0.00019	-0.00382	0.0003	-0.0111	-0.0005
40	SLU 43	0.00508	-0.0002	-0.00796	0.0003	-0.0056	-0.0004
40	SLU 44	0.03171	-0.0002	-0.00403	0.0003	-0.0113	-0.0005
40	SLU 45	0.00508	-0.0002	-0.00796	0.0003	-0.0056	-0.0005
40	SLU 46	0.03171	-0.0002	-0.00403	0.0003	-0.0113	-0.0005
40	SLU 47	0.04002	-0.00023	-0.00271	0.0003	-0.0131	-0.0004
40	SLU 48	0.04002	-0.00023	-0.00271	0.0003	-0.0131	-0.0004
40	SLU 49	0.00451	-0.00023	-0.00796	0.0003	-0.0054	-0.0004
40	SLU 50	0.03114	-0.00023	-0.00402	0.0003	-0.0112	-0.0004
40	SLU 51	0.04045	-0.00023	-0.00292	0.0003	-0.0133	-0.0004
40	SLU 52	0.04045	-0.00023	-0.00292	0.0003	-0.0133	-0.0004
40	SLU 53	0.00494	-0.00023	-0.00817	0.0003	-0.0057	-0.0004
40	SLU 54	0.03157	-0.00023	-0.00423	0.0003	-0.0114	-0.0004
40	SLU 55	0.00537	-0.00024	-0.00838	0.0003	-0.006	-0.0004
40	SLU 56	0.032	-0.00024	-0.00444	0.0003	-0.0117	-0.0004
40	SLU 57	0.00537	-0.00024	-0.00838	0.0003	-0.006	-0.0004
40	SLU 58	0.032	-0.00024	-0.00444	0.0003	-0.0117	-0.0004
40	SLU 59	0.00495	-0.00029	-0.00858	0.0002	-0.006	-0.0002
40	SLU 60	0.03158	-0.00029	-0.00464	0.0003	-0.0117	-0.0002
40	SLU 61	0.00495	-0.00029	-0.00858	0.0003	-0.006	-0.0002
40	SLU 62	0.03158	-0.00029	-0.00464	0.0003	-0.0117	-0.0002
40	SLU 63	0.00537	-0.00029	-0.00879	0.0003	-0.0062	-0.0002
40	SLU 64	0.03201	-0.00029	-0.00485	0.0003	-0.012	-0.0002
40	SLU 65	0.00537	-0.00029	-0.00879	0.0003	-0.0062	-0.0002
40	SLU 66	0.03201	-0.00029	-0.00485	0.0003	-0.012	-0.0003
40	SLU 67	0.00549	-0.00024	-0.00981	0.0004	-0.0066	-0.0005
40	SLU 68	0.041	-0.00024	-0.00456	0.0004	-0.0142	-0.0006
40	SLU 69	0.041	-0.00024	-0.00456	0.0004	-0.0142	-0.0006
40	SLU 70	0.00549	-0.00024	-0.00981	0.0004	-0.0066	-0.0006
40	SLU 71	0.03212	-0.00024	-0.00587	0.0004	-0.0123	-0.0006
40	SLU 72	0.04143	-0.00025	-0.00477	0.0004	-0.0145	-0.0006
40	SLU 73	0.04143	-0.00025	-0.00477	0.0004	-0.0145	-0.0006
40	SLU 74	0.00592	-0.00025	-0.01002	0.0004	-0.0069	-0.0006
40	SLU 75	0.03255	-0.00025	-0.00608	0.0004	-0.0126	-0.0006
40	SLU 76	0.00635	-0.00026	-0.01023	0.0004	-0.0071	-0.0006
40	SLU 77	0.03298	-0.00026	-0.00629	0.0004	-0.0129	-0.0006
40	SLU 78	0.00635	-0.00026	-0.01023	0.0004	-0.0071	-0.0006
40	SLU 79	0.03298	-0.00026	-0.00629	0.0004	-0.0129	-0.0006
40	SLU 80	0.04129	-0.00028	-0.00497	0.0004	-0.0146	-0.0005
40	SLU 81	0.04129	-0.00028	-0.00497	0.0004	-0.0146	-0.0005
40	SLU 82	0.00578	-0.00028	-0.01022	0.0004	-0.007	-0.0005
40	SLU 83	0.03241	-0.00028	-0.00628	0.0004	-0.0127	-0.0005
40	SLU 84	0.04172	-0.00029	-0.00518	0.0004	-0.0149	-0.0005
40	SLU 85	0.04172	-0.00029	-0.00518	0.0004	-0.0149	-0.0005

Nodo	Cont.	Spostamento			Rotazione		
Ind.	N.br.	ux	uy	uz	rx	ry	rz
40	SLU 86	0.00621	-0.00029	-0.01043	0.0004	-0.0072	-0.0005
40	SLU 87	0.03284	-0.00029	-0.00649	0.0004	-0.0129	-0.0005
40	SLU 88	0.00664	-0.0003	-0.01064	0.0004	-0.0075	-0.0005
40	SLU 89	0.03327	-0.0003	-0.0067	0.0004	-0.0132	-0.0005
40	SLU 90	0.00664	-0.0003	-0.01064	0.0004	-0.0075	-0.0005
40	SLU 91	0.03327	-0.0003	-0.0067	0.0004	-0.0132	-0.0005
40	SLU 92	0.00621	-0.00034	-0.01084	0.0003	-0.0075	-0.0003
40	SLU 93	0.03284	-0.00034	-0.0069	0.0004	-0.0132	-0.0004
40	SLU 94	0.00621	-0.00034	-0.01084	0.0003	-0.0075	-0.0003
40	SLU 95	0.03284	-0.00034	-0.0069	0.0004	-0.0132	-0.0004
40	SLU 96	0.00664	-0.00035	-0.01105	0.0003	-0.0078	-0.0003
40	SLU 97	0.03327	-0.00035	-0.00711	0.0004	-0.0135	-0.0004
40	SLU 98	0.00664	-0.00035	-0.01105	0.0003	-0.0078	-0.0003
40	SLU 99	0.03327	-0.00035	-0.00711	0.0004	-0.0135	-0.0004
40	SLU 100	0.00549	-0.00024	-0.00981	0.0004	-0.0066	-0.0005
40	SLU 101	0.041	-0.00024	-0.00456	0.0004	-0.0142	-0.0006
40	SLU 102	0.041	-0.00024	-0.00456	0.0004	-0.0142	-0.0006
40	SLU 103	0.00549	-0.00024	-0.00981	0.0004	-0.0066	-0.0006
40	SLU 104	0.03212	-0.00024	-0.00587	0.0004	-0.0123	-0.0006
40	SLU 105	0.04143	-0.00025	-0.00477	0.0004	-0.0145	-0.0006
40	SLU 106	0.04143	-0.00025	-0.00477	0.0004	-0.0145	-0.0006
40	SLU 107	0.00592	-0.00025	-0.01002	0.0004	-0.0069	-0.0006
40	SLU 108	0.03255	-0.00025	-0.00608	0.0004	-0.0126	-0.0006
40	SLU 109	0.00635	-0.00026	-0.01023	0.0004	-0.0071	-0.0006
40	SLU 110	0.03298	-0.00026	-0.00629	0.0004	-0.0129	-0.0006
40	SLU 111	0.00635	-0.00026	-0.01023	0.0004	-0.0071	-0.0006
40	SLU 112	0.03298	-0.00026	-0.00629	0.0004	-0.0129	-0.0006
40	SLU 113	0.04129	-0.00028	-0.00497	0.0004	-0.0146	-0.0005
40	SLU 114	0.04129	-0.00028	-0.00497	0.0004	-0.0146	-0.0005
40	SLU 115	0.00578	-0.00028	-0.01022	0.0004	-0.007	-0.0005
40	SLU 116	0.03241	-0.00028	-0.00628	0.0004	-0.0127	-0.0005
40	SLU 117	0.04172	-0.00029	-0.00518	0.0004	-0.0149	-0.0005
40	SLU 118	0.04172	-0.00029	-0.00518	0.0004	-0.0149	-0.0005
40	SLU 119	0.00621	-0.00029	-0.01043	0.0004	-0.0072	-0.0005
40	SLU 120	0.03284	-0.00029	-0.00649	0.0004	-0.0129	-0.0005
40	SLU 121	0.00664	-0.0003	-0.01064	0.0004	-0.0075	-0.0005
40	SLU 122	0.03327	-0.0003	-0.0067	0.0004	-0.0132	-0.0005
40	SLU 123	0.00664	-0.0003	-0.01064	0.0004	-0.0075	-0.0005
40	SLU 124	0.03327	-0.0003	-0.0067	0.0004	-0.0132	-0.0005
40	SLU 125	0.00621	-0.00034	-0.01084	0.0003	-0.0075	-0.0003
40	SLU 126	0.03284	-0.00034	-0.0069	0.0004	-0.0132	-0.0004
40	SLU 127	0.00621	-0.00034	-0.01084	0.0003	-0.0075	-0.0003
40	SLU 128	0.03284	-0.00034	-0.0069	0.0004	-0.0132	-0.0004
40	SLU 129	0.00664	-0.00035	-0.01105	0.0003	-0.0078	-0.0003
40	SLU 130	0.03327	-0.00035	-0.00711	0.0004	-0.0135	-0.0004
40	SLU 131	0.00664	-0.00035	-0.01105	0.0003	-0.0078	-0.0003
40	SLU 132	0.03327	-0.00035	-0.00711	0.0004	-0.0135	-0.0004
40	SLE RA 1	0.00422	-0.00019	-0.00754	0.0003	-0.0051	-0.0004
40	SLE RA 2	0.0279	-0.00019	-0.00404	0.0003	-0.0102	-0.0004
40	SLE RA 3	0.0279	-0.00019	-0.00404	0.0003	-0.0102	-0.0005
40	SLE RA 4	0.00422	-0.00019	-0.00754	0.0003	-0.0051	-0.0004
40	SLE RA 5	0.02198	-0.00019	-0.00492	0.0003	-0.0089	-0.0005
40	SLE RA 6	0.02818	-0.00019	-0.00418	0.0003	-0.0103	-0.0005
40	SLE RA 7	0.02818	-0.00019	-0.00418	0.0003	-0.0103	-0.0005
40	SLE RA 8	0.00451	-0.00019	-0.00768	0.0003	-0.0053	-0.0004
40	SLE RA 9	0.02226	-0.00019	-0.00506	0.0003	-0.0091	-0.0005
40	SLE RA 10	0.00479	-0.0002	-0.00782	0.0003	-0.0054	-0.0004
40	SLE RA 11	0.02255	-0.0002	-0.0052	0.0003	-0.0092	-0.0005
40	SLE RA 12	0.00479	-0.0002	-0.00782	0.0003	-0.0054	-0.0004
40	SLE RA 13	0.02255	-0.0002	-0.0052	0.0003	-0.0092	-0.0005
40	SLE RA 14	0.02809	-0.00021	-0.00432	0.0003	-0.0104	-0.0004
40	SLE RA 15	0.02809	-0.00021	-0.00432	0.0003	-0.0104	-0.0004
40	SLE RA 16	0.00442	-0.00021	-0.00782	0.0003	-0.0053	-0.0004
40	SLE RA 17	0.02217	-0.00021	-0.00519	0.0003	-0.0091	-0.0004
40	SLE RA 18	0.02837	-0.00022	-0.00446	0.0003	-0.0106	-0.0004
40	SLE RA 19	0.02837	-0.00022	-0.00446	0.0003	-0.0106	-0.0004
40	SLE RA 20	0.0047	-0.00022	-0.00796	0.0003	-0.0055	-0.0004
40	SLE RA 21	0.02246	-0.00022	-0.00534	0.0003	-0.0093	-0.0004
40	SLE RA 22	0.00499	-0.00022	-0.0081	0.0003	-0.0057	-0.0004
40	SLE RA 23	0.02274	-0.00022	-0.00548	0.0003	-0.0095	-0.0004
40	SLE RA 24	0.00499	-0.00022	-0.0081	0.0003	-0.0057	-0.0004
40	SLE RA 25	0.02274	-0.00022	-0.00548	0.0003	-0.0095	-0.0004
40	SLE RA 26	0.00471	-0.00025	-0.00823	0.0003	-0.0057	-0.0003
40	SLE RA 27	0.02246	-0.00025	-0.00561	0.0003	-0.0095	-0.0003
40	SLE RA 28	0.00471	-0.00025	-0.00823	0.0003	-0.0057	-0.0003
40	SLE RA 29	0.02246	-0.00025	-0.00561	0.0003	-0.0095	-0.0003
40	SLE RA 30	0.00499	-0.00026	-0.00837	0.0003	-0.0059	-0.0003
40	SLE RA 31	0.02274	-0.00026	-0.00575	0.0003	-0.0097	-0.0003
40	SLE RA 32	0.00499	-0.00026	-0.00837	0.0003	-0.0059	-0.0003
40	SLE RA 33	0.02274	-0.00026	-0.00575	0.0003	-0.0097	-0.0003
40	SLE FR 1	0.00422	-0.00019	-0.00754	0.0003	-0.0051	-0.0004
40	SLE FR 2	0.02198	-0.00019	-0.00492	0.0003	-0.0089	-0.0004
40	SLE FR 3	0.00422	-0.00019	-0.00754	0.0003	-0.0051	-0.0004
40	SLE FR 4	0.00434	-0.00019	-0.0076	0.0003	-0.0052	-0.0004
40	SLE FR 5	0.00442	-0.00021	-0.00782	0.0003	-0.0053	-0.0004
40	SLE QP 1	0.00422	-0.00019	-0.00754	0.0003	-0.0051	-0.0004
40	SLO 1	-0.00573	-0.00041	-0.01188	-0.1093	-0.0085	0.2618
40	SLO 2	-0.00573	-0.00041	-0.01188	-0.1093	-0.0085	0.2618
40	SLO 3	-0.00573	0.00003	-0.01188	0.1098	-0.0085	-0.2626
40	SLO 4	-0.00573	0.00003	-0.01188	0.1098	-0.0085	-0.2626
40	SLO 5	0.00124	-0.00093	-0.00884	-0.3649	-0.0061	0.8736
40	SLO 6	0.00124	-0.00093	-0.00884	-0.3649	-0.0061	0.8736
40	SLO 7	0.00124	0.00055	-0.00884	0.3655	-0.0061	-0.8745
40	SLO 8	0.00124	0.00055	-0.00884	0.3655	-0.0061	-0.8745
40	SLO 9	0.00721	-0.00093	-0.00624	-0.3649	-0.0041	0.8736

Nodo	Cont.	Spostamento			Rotazione		
Ind.	N.br.	ux	uy	uz	rx	ry	rz
40	SLO 10	0.00721	-0.00093	-0.00624	-0.3649	-0.0041	0.8736
40	SLO 11	0.00721	0.00055	-0.00624	0.3655	-0.0041	-0.8745
40	SLO 12	0.00721	0.00055	-0.00624	0.3655	-0.0041	-0.8745
40	SLO 13	0.01418	-0.00041	-0.00321	-0.1093	-0.0017	0.2618
40	SLO 14	0.01418	-0.00041	-0.00321	-0.1093	-0.0017	0.2618
40	SLO 15	0.01418	0.00004	-0.00321	0.1098	-0.0017	-0.2626
40	SLO 16	0.01418	0.00004	-0.00321	0.1098	-0.0017	-0.2626
40	SLD 1	-0.00396	-0.00039	-0.01111	-0.1009	-0.0079	0.2419
40	SLD 2	-0.00396	-0.00039	-0.01111	-0.1009	-0.0079	0.2419
40	SLD 3	-0.00396	0.00002	-0.01111	0.1015	-0.0079	-0.2427
40	SLD 4	-0.00396	0.00002	-0.01111	0.1015	-0.0079	-0.2427
40	SLD 5	0.00177	-0.00087	-0.00861	-0.3372	-0.0059	0.8072
40	SLD 6	0.00177	-0.00087	-0.00861	-0.3372	-0.0059	0.8072
40	SLD 7	0.00177	0.0005	-0.00861	0.3377	-0.0059	-0.808
40	SLD 8	0.00177	0.0005	-0.00861	0.3377	-0.0059	-0.808
40	SLD 9	0.00668	-0.00087	-0.00647	-0.3372	-0.0042	0.8072
40	SLD 10	0.00668	-0.00087	-0.00647	-0.3372	-0.0042	0.8072
40	SLD 11	0.00668	0.0005	-0.00647	0.3377	-0.0042	-0.808
40	SLD 12	0.00668	0.0005	-0.00647	0.3377	-0.0042	-0.808
40	SLD 13	0.01241	-0.00039	-0.00398	-0.101	-0.0023	0.2419
40	SLD 14	0.01241	-0.00039	-0.00398	-0.101	-0.0023	0.2419
40	SLD 15	0.01241	0.00002	-0.00398	0.1015	-0.0023	-0.2427
40	SLD 16	0.01241	0.00002	-0.00398	0.1015	-0.0023	-0.2427
40	SLV 1	-0.01342	-0.00073	-0.01523	-0.2667	-0.0111	0.6386
40	SLV 2	-0.01342	-0.00073	-0.01523	-0.2667	-0.0111	0.6386
40	SLV 3	-0.01342	0.00035	-0.01523	0.2673	-0.0111	-0.6394
40	SLV 4	-0.01342	0.00035	-0.01523	0.2673	-0.0111	-0.6394
40	SLV 5	-0.00107	-0.00199	-0.00985	-0.8897	-0.0069	2.1296
40	SLV 6	-0.00107	-0.00199	-0.00985	-0.8897	-0.0069	2.1296
40	SLV 7	-0.00107	0.00162	-0.00985	0.8903	-0.0069	-2.1305
40	SLV 8	-0.00107	0.00162	-0.00985	0.8903	-0.0069	-2.1305
40	SLV 9	0.00952	-0.00199	-0.00524	-0.8897	-0.0033	2.1296
40	SLV 10	0.00952	-0.00199	-0.00524	-0.8897	-0.0033	2.1296
40	SLV 11	0.00952	0.00162	-0.00524	0.8903	-0.0033	-2.1305
40	SLV 12	0.00952	0.00162	-0.00524	0.8903	-0.0033	-2.1305
40	SLV 13	0.02186	-0.00073	0.00014	-0.2667	0.001	0.6386
40	SLV 14	0.02186	-0.00073	0.00014	-0.2667	0.001	0.6386
40	SLV 15	0.02186	0.00036	0.00014	0.2673	0.001	-0.6394
40	SLV 16	0.02186	0.00036	0.00014	0.2673	0.001	-0.6394
41	SLU 1	-0.00426	-0.00007	-0.00757	0.0001	0.0051	0.0001
41	SLU 2	-0.07527	-0.00007	0.00292	0.0001	0.0204	0.0002
41	SLU 3	-0.07527	-0.00007	0.00292	0.0001	0.0204	0.0002
41	SLU 4	-0.00426	-0.00007	-0.00757	0.0001	0.0051	0.0002
41	SLU 5	-0.05751	-0.00007	0.0003	0.0001	0.0165	0.0002
41	SLU 6	-0.07588	-0.00007	0.00277	0.0001	0.0206	0.0002
41	SLU 7	-0.07588	-0.00007	0.00277	0.0001	0.0206	0.0002
41	SLU 8	-0.00486	-0.00007	-0.00772	0.0001	0.0054	0.0002
41	SLU 9	-0.05812	-0.00007	0.00015	0.0001	0.0168	0.0002
41	SLU 10	-0.00547	-0.00007	-0.00787	0.0001	0.0056	0.0002
41	SLU 11	-0.05873	-0.00008	0	0.0001	0.017	0.0002
41	SLU 12	-0.00547	-0.00007	-0.00787	0.0001	0.0056	0.0002
41	SLU 13	-0.05873	-0.00008	0	0.0001	0.017	0.0002
41	SLU 14	-0.07543	-0.00009	0.00255	0.0001	0.0206	0
41	SLU 15	-0.07543	-0.00009	0.00255	0.0001	0.0206	0.0001
41	SLU 16	-0.00442	-0.00009	-0.00795	0.0001	0.0053	0
41	SLU 17	-0.05768	-0.00009	-0.00008	0.0001	0.0168	0.0001
41	SLU 18	-0.07604	-0.00009	0.0024	0.0001	0.0208	0.0001
41	SLU 19	-0.07604	-0.00009	0.0024	0.0001	0.0208	0.0001
41	SLU 20	-0.00503	-0.00009	-0.0081	0.0001	0.0056	0
41	SLU 21	-0.05829	-0.00009	-0.00023	0.0001	0.017	0.0001
41	SLU 22	-0.00564	-0.00009	-0.00825	0.0001	0.0058	0
41	SLU 23	-0.0589	-0.00009	-0.00038	0.0001	0.0172	0
41	SLU 24	-0.00564	-0.00009	-0.00825	0.0001	0.0058	0
41	SLU 25	-0.0589	-0.00009	-0.00038	0.0001	0.0172	0.0001
41	SLU 26	-0.00467	-0.00011	-0.00851	0	0.0057	-0.0002
41	SLU 27	-0.05793	-0.00011	-0.00064	0	0.0171	-0.0002
41	SLU 28	-0.00467	-0.00011	-0.00851	0	0.0057	-0.0002
41	SLU 29	-0.05793	-0.00011	-0.00064	0	0.0171	-0.0002
41	SLU 30	-0.00528	-0.00012	-0.00866	0	0.0059	-0.0002
41	SLU 31	-0.05853	-0.00012	-0.00079	0	0.0173	-0.0002
41	SLU 32	-0.00528	-0.00012	-0.00866	0	0.0059	-0.0002
41	SLU 33	-0.05853	-0.00012	-0.00079	0	0.0173	-0.0001
41	SLU 34	-0.00426	-0.00007	-0.00757	0.0001	0.0051	0.0001
41	SLU 35	-0.07527	-0.00007	0.00292	0.0001	0.0204	0.0002
41	SLU 36	-0.07527	-0.00007	0.00292	0.0001	0.0204	0.0002
41	SLU 37	-0.00426	-0.00007	-0.00757	0.0001	0.0051	0.0002
41	SLU 38	-0.05751	-0.00007	0.0003	0.0001	0.0165	0.0002
41	SLU 39	-0.07588	-0.00007	0.00277	0.0001	0.0206	0.0002
41	SLU 40	-0.07588	-0.00007	0.00277	0.0001	0.0206	0.0002
41	SLU 41	-0.00486	-0.00007	-0.00772	0.0001	0.0054	0.0002
41	SLU 42	-0.05812	-0.00007	0.00015	0.0001	0.0168	0.0002
41	SLU 43	-0.00547	-0.00007	-0.00787	0.0001	0.0056	0.0002
41	SLU 44	-0.05873	-0.00008	0	0.0001	0.017	0.0002
41	SLU 45	-0.00547	-0.00007	-0.00787	0.0001	0.0056	0.0002
41	SLU 46	-0.05873	-0.00008	0	0.0001	0.017	0.0002
41	SLU 47	-0.07543	-0.00009	0.00255	0.0001	0.0206	0
41	SLU 48	-0.07543	-0.00009	0.00255	0.0001	0.0206	0.0001
41	SLU 49	-0.00442	-0.00009	-0.00795	0.0001	0.0053	0
41	SLU 50	-0.05768	-0.00009	-0.00008	0.0001	0.0168	0.0001
41	SLU 51	-0.07604	-0.00009	0.0024	0.0001	0.0208	0.0001
41	SLU 52	-0.07604	-0.00009	0.0024	0.0001	0.0208	0.0001
41	SLU 53	-0.00503	-0.00009	-0.0081	0.0001	0.0056	0
41	SLU 54	-0.05829	-0.00009	-0.00023	0.0001	0.017	0.0001
41	SLU 55	-0.00564	-0.00009	-0.00825	0.0001	0.0058	0
41	SLU 56	-0.0589	-0.00009	-0.00038	0.0001	0.0172	0

Nodo	Cont.	Spostamento			Rotazione		
Ind.	N.br.	ux	uy	uz	rx	ry	rz
41	SLU 57	-0.00564	-0.00009	-0.00825	0.0001	0.0058	0
41	SLU 58	-0.0589	-0.00009	-0.00038	0.0001	0.0172	0.0001
41	SLU 59	-0.00467	-0.00011	-0.00851	0	0.0057	-0.0002
41	SLU 60	-0.05793	-0.00011	-0.00064	0	0.0171	-0.0002
41	SLU 61	-0.00467	-0.00011	-0.00851	0	0.0057	-0.0002
41	SLU 62	-0.05793	-0.00011	-0.00064	0	0.0171	-0.0002
41	SLU 63	-0.00528	-0.00012	-0.00866	0	0.0059	-0.0002
41	SLU 64	-0.05853	-0.00012	-0.00079	0	0.0173	-0.0002
41	SLU 65	-0.00528	-0.00012	-0.00866	0	0.0059	-0.0002
41	SLU 66	-0.05853	-0.00012	-0.00079	0	0.0173	-0.0001
41	SLU 67	-0.00553	-0.00009	-0.00985	0.0001	0.0066	0.0002
41	SLU 68	-0.07654	-0.00009	0.00065	0.0002	0.0219	0.0002
41	SLU 69	-0.07654	-0.00009	0.00065	0.0002	0.0219	0.0002
41	SLU 70	-0.00553	-0.00009	-0.00985	0.0001	0.0066	0.0002
41	SLU 71	-0.05879	-0.00009	-0.00197	0.0002	0.0181	0.0003
41	SLU 72	-0.07715	-0.00009	0.0005	0.0002	0.0221	0.0002
41	SLU 73	-0.07715	-0.00009	0.0005	0.0002	0.0221	0.0002
41	SLU 74	-0.00614	-0.00009	-0.01	0.0001	0.0069	0.0002
41	SLU 75	-0.0594	-0.00009	-0.00212	0.0002	0.0183	0.0003
41	SLU 76	-0.00675	-0.0001	-0.01014	0.0001	0.0071	0.0002
41	SLU 77	-0.06001	-0.0001	-0.00227	0.0002	0.0186	0.0002
41	SLU 78	-0.00675	-0.0001	-0.01014	0.0001	0.0071	0.0002
41	SLU 79	-0.06001	-0.0001	-0.00227	0.0002	0.0186	0.0002
41	SLU 80	-0.07671	-0.00011	0.00027	0.0001	0.0221	0.0001
41	SLU 81	-0.07671	-0.00011	0.00027	0.0001	0.0221	0.0001
41	SLU 82	-0.0057	-0.00011	-0.01022	0.0001	0.0069	0.0001
41	SLU 83	-0.05896	-0.00011	-0.00235	0.0001	0.0183	0.0001
41	SLU 84	-0.07732	-0.00011	0.00013	0.0001	0.0224	0.0001
41	SLU 85	-0.07732	-0.00011	0.00013	0.0001	0.0224	0.0001
41	SLU 86	-0.00631	-0.00011	-0.01037	0.0001	0.0071	0.0001
41	SLU 87	-0.05956	-0.00011	-0.0025	0.0001	0.0185	0.0001
41	SLU 88	-0.00691	-0.00011	-0.01052	0.0001	0.0073	0.0001
41	SLU 89	-0.06017	-0.00011	-0.00265	0.0001	0.0188	0.0001
41	SLU 90	-0.00691	-0.00011	-0.01052	0.0001	0.0073	0.0001
41	SLU 91	-0.06017	-0.00011	-0.00265	0.0001	0.0188	0.0001
41	SLU 92	-0.00594	-0.00013	-0.01078	0	0.0072	-0.0002
41	SLU 93	-0.0592	-0.00014	-0.00291	0	0.0186	-0.0001
41	SLU 94	-0.00594	-0.00013	-0.01078	0	0.0072	-0.0001
41	SLU 95	-0.0592	-0.00014	-0.00291	0	0.0186	-0.0001
41	SLU 96	-0.00655	-0.00014	-0.01093	0	0.0074	-0.0001
41	SLU 97	-0.05981	-0.00014	-0.00306	0	0.0189	-0.0001
41	SLU 98	-0.00655	-0.00014	-0.01093	0	0.0074	-0.0001
41	SLU 99	-0.05981	-0.00014	-0.00306	0	0.0189	-0.0001
41	SLU 100	-0.00553	-0.00009	-0.00985	0.0001	0.0066	0.0002
41	SLU 101	-0.07654	-0.00009	0.00065	0.0002	0.0219	0.0002
41	SLU 102	-0.07654	-0.00009	0.00065	0.0002	0.0219	0.0002
41	SLU 103	-0.00553	-0.00009	-0.00985	0.0001	0.0066	0.0002
41	SLU 104	-0.05879	-0.00009	-0.00197	0.0002	0.0181	0.0003
41	SLU 105	-0.07715	-0.00009	0.0005	0.0002	0.0221	0.0002
41	SLU 106	-0.07715	-0.00009	0.0005	0.0002	0.0221	0.0002
41	SLU 107	-0.00614	-0.00009	-0.01	0.0001	0.0069	0.0002
41	SLU 108	-0.0594	-0.00009	-0.00212	0.0002	0.0183	0.0003
41	SLU 109	-0.00675	-0.0001	-0.01014	0.0001	0.0071	0.0002
41	SLU 110	-0.06001	-0.0001	-0.00227	0.0002	0.0186	0.0002
41	SLU 111	-0.00675	-0.0001	-0.01014	0.0001	0.0071	0.0002
41	SLU 112	-0.06001	-0.0001	-0.00227	0.0002	0.0186	0.0002
41	SLU 113	-0.07671	-0.00011	0.00027	0.0001	0.0221	0.0001
41	SLU 114	-0.07671	-0.00011	0.00027	0.0001	0.0221	0.0001
41	SLU 115	-0.0057	-0.00011	-0.01022	0.0001	0.0069	0.0001
41	SLU 116	-0.05896	-0.00011	-0.00235	0.0001	0.0183	0.0001
41	SLU 117	-0.07732	-0.00011	0.00013	0.0001	0.0224	0.0001
41	SLU 118	-0.07732	-0.00011	0.00013	0.0001	0.0224	0.0001
41	SLU 119	-0.00631	-0.00011	-0.01037	0.0001	0.0071	0.0001
41	SLU 120	-0.05956	-0.00011	-0.0025	0.0001	0.0185	0.0001
41	SLU 121	-0.00691	-0.00011	-0.01052	0.0001	0.0073	0.0001
41	SLU 122	-0.06017	-0.00011	-0.00265	0.0001	0.0188	0.0001
41	SLU 123	-0.00691	-0.00011	-0.01052	0.0001	0.0073	0.0001
41	SLU 124	-0.06017	-0.00011	-0.00265	0.0001	0.0188	0.0001
41	SLU 125	-0.00594	-0.00013	-0.01078	0	0.0072	-0.0002
41	SLU 126	-0.0592	-0.00014	-0.00291	0	0.0186	-0.0001
41	SLU 127	-0.00594	-0.00013	-0.01078	0	0.0072	-0.0001
41	SLU 128	-0.0592	-0.00014	-0.00291	0	0.0186	-0.0001
41	SLU 129	-0.00655	-0.00014	-0.01093	0	0.0074	-0.0001
41	SLU 130	-0.05981	-0.00014	-0.00306	0	0.0189	-0.0001
41	SLU 131	-0.00655	-0.00014	-0.01093	0	0.0074	-0.0001
41	SLU 132	-0.05981	-0.00014	-0.00306	0	0.0189	-0.0001
41	SLE RA 1	-0.00426	-0.00007	-0.00757	0.0001	0.0051	0.0001
41	SLE RA 2	-0.0516	-0.00007	-0.00058	0.0001	0.0153	0.0002
41	SLE RA 3	-0.0516	-0.00007	-0.00058	0.0001	0.0153	0.0002
41	SLE RA 4	-0.00426	-0.00007	-0.00757	0.0001	0.0051	0.0002
41	SLE RA 5	-0.03976	-0.00007	-0.00233	0.0001	0.0127	0.0002
41	SLE RA 6	-0.052	-0.00007	-0.00068	0.0001	0.0154	0.0002
41	SLE RA 7	-0.052	-0.00007	-0.00068	0.0001	0.0154	0.0002
41	SLE RA 8	-0.00466	-0.00007	-0.00767	0.0001	0.0053	0.0002
41	SLE RA 9	-0.04017	-0.00007	-0.00243	0.0001	0.0129	0.0002
41	SLE RA 10	-0.00507	-0.00007	-0.00777	0.0001	0.0054	0.0002
41	SLE RA 11	-0.04057	-0.00007	-0.00253	0.0001	0.0131	0.0002
41	SLE RA 12	-0.00507	-0.00007	-0.00777	0.0001	0.0054	0.0002
41	SLE RA 13	-0.04057	-0.00007	-0.00253	0.0001	0.0131	0.0002
41	SLE RA 14	-0.05171	-0.00008	-0.00083	0.0001	0.0154	0.0001
41	SLE RA 15	-0.05171	-0.00008	-0.00083	0.0001	0.0154	0.0001
41	SLE RA 16	-0.00437	-0.00008	-0.00782	0.0001	0.0053	0.0001
41	SLE RA 17	-0.03987	-0.00008	-0.00258	0.0001	0.0129	0.0001
41	SLE RA 18	-0.05211	-0.00008	-0.00093	0.0001	0.0156	0.0001
41	SLE RA 19	-0.05211	-0.00008	-0.00093	0.0001	0.0156	0.0001

Nodo	Cont.	Spostamento			Rotazione		
Ind.	N.br.	ux	uy	uz	rx	ry	rz
41	SLE RA 20	-0.00477	-0.00008	-0.00792	0.0001	0.0054	0.0001
41	SLE RA 21	-0.04028	-0.00008	-0.00268	0.0001	0.013	0.0001
41	SLE RA 22	-0.00518	-0.00008	-0.00802	0.0001	0.0056	0.0001
41	SLE RA 23	-0.04068	-0.00009	-0.00278	0.0001	0.0132	0.0001
41	SLE RA 24	-0.00518	-0.00008	-0.00802	0.0001	0.0056	0.0001
41	SLE RA 25	-0.04068	-0.00009	-0.00278	0.0001	0.0132	0.0001
41	SLE RA 26	-0.00453	-0.0001	-0.0082	0	0.0055	-0.0001
41	SLE RA 27	-0.04004	-0.0001	-0.00295	0	0.0131	-0.0001
41	SLE RA 28	-0.00453	-0.0001	-0.0082	0	0.0055	-0.0001
41	SLE RA 29	-0.04004	-0.0001	-0.00295	0	0.0131	-0.0001
41	SLE RA 30	-0.00494	-0.0001	-0.0083	0	0.0056	-0.0001
41	SLE RA 31	-0.04044	-0.0001	-0.00305	0	0.0133	-0.0001
41	SLE RA 32	-0.00494	-0.0001	-0.0083	0	0.0056	-0.0001
41	SLE RA 33	-0.04044	-0.0001	-0.00305	0	0.0133	-0.0001
41	SLE FR 1	-0.00426	-0.00007	-0.00757	0.0001	0.0051	0.0001
41	SLE FR 2	-0.03976	-0.00007	-0.00233	0.0001	0.0127	0.0002
41	SLE FR 3	-0.00426	-0.00007	-0.00757	0.0001	0.0051	0.0002
41	SLE FR 4	-0.00442	-0.00007	-0.00761	0.0001	0.0052	0.0001
41	SLE FR 5	-0.00437	-0.00008	-0.00782	0.0001	0.0053	0.0001
41	SLE QP 1	-0.00426	-0.00007	-0.00757	0.0001	0.0051	0.0001
41	SLO 1	-0.01426	-0.0003	-0.00322	-0.1094	0.0017	-0.262
41	SLO 2	-0.01426	-0.0003	-0.00322	-0.1094	0.0017	-0.262
41	SLO 3	-0.01426	0.00017	-0.00322	0.1096	0.0017	0.2623
41	SLO 4	-0.01426	0.00017	-0.00322	0.1096	0.0017	0.2623
41	SLO 5	-0.00726	-0.00085	-0.00627	-0.365	0.0041	-0.8738
41	SLO 6	-0.00726	-0.00085	-0.00627	-0.365	0.0041	-0.8738
41	SLO 7	-0.00726	0.00071	-0.00627	0.3652	0.0041	0.8741
41	SLO 8	-0.00726	0.00071	-0.00627	0.3652	0.0041	0.8741
41	SLO 9	-0.00126	-0.00085	-0.00888	-0.365	0.0061	-0.8738
41	SLO 10	-0.00126	-0.00085	-0.00888	-0.365	0.0061	-0.8738
41	SLO 11	-0.00126	0.00071	-0.00888	0.3652	0.0061	0.8741
41	SLO 12	-0.00126	0.00071	-0.00888	0.3652	0.0061	0.8741
41	SLO 13	0.00575	-0.0003	-0.01193	-0.1094	0.0086	-0.262
41	SLO 14	0.00575	-0.0003	-0.01193	-0.1094	0.0086	-0.262
41	SLO 15	0.00575	0.00016	-0.01193	0.1096	0.0086	0.2623
41	SLO 16	0.00575	0.00016	-0.01193	0.1096	0.0086	0.2623
41	SLD 1	-0.01248	-0.00029	-0.00399	-0.1011	0.0023	-0.2421
41	SLD 2	-0.01248	-0.00029	-0.00399	-0.1011	0.0023	-0.2421
41	SLD 3	-0.01248	0.00015	-0.00399	0.1013	0.0023	0.2424
41	SLD 4	-0.01248	0.00015	-0.00399	0.1013	0.0023	0.2424
41	SLD 5	-0.00672	-0.00079	-0.0065	-0.3373	0.0043	-0.8073
41	SLD 6	-0.00672	-0.00079	-0.0065	-0.3373	0.0043	-0.8073
41	SLD 7	-0.00672	0.00065	-0.0065	0.3375	0.0043	0.8076
41	SLD 8	-0.00672	0.00065	-0.0065	0.3375	0.0043	0.8076
41	SLD 9	-0.00179	-0.00079	-0.00865	-0.3373	0.006	-0.8073
41	SLD 10	-0.00179	-0.00079	-0.00865	-0.3373	0.006	-0.8073
41	SLD 11	-0.00179	0.00065	-0.00865	0.3375	0.006	0.8076
41	SLD 12	-0.00179	0.00065	-0.00865	0.3375	0.006	0.8076
41	SLD 13	0.00397	-0.00029	-0.01116	-0.1011	0.0079	-0.2421
41	SLD 14	0.00397	-0.00029	-0.01116	-0.1011	0.0079	-0.2421
41	SLD 15	0.00397	0.00015	-0.01116	0.1013	0.0079	0.2424
41	SLD 16	0.00397	0.00015	-0.01116	0.1013	0.0079	0.2424
41	SLV 1	-0.02198	-0.00064	0.00014	-0.2668	-0.001	-0.6388
41	SLV 2	-0.02198	-0.00064	0.00014	-0.2668	-0.001	-0.6388
41	SLV 3	-0.02198	0.0005	0.00014	0.267	-0.001	0.6391
41	SLV 4	-0.02198	0.0005	0.00014	0.267	-0.001	0.6391
41	SLV 5	-0.00957	-0.00197	-0.00526	-0.8897	0.0033	-2.1296
41	SLV 6	-0.00957	-0.00197	-0.00526	-0.8897	0.0033	-2.1296
41	SLV 7	-0.00957	0.00184	-0.00526	0.8899	0.0033	2.1299
41	SLV 8	-0.00957	0.00184	-0.00526	0.8899	0.0033	2.1299
41	SLV 9	0.00106	-0.00197	-0.00989	-0.8897	0.0069	-2.1296
41	SLV 10	0.00106	-0.00197	-0.00989	-0.8897	0.0069	-2.1296
41	SLV 11	0.00106	0.00183	-0.00989	0.8899	0.0069	2.1299
41	SLV 12	0.00106	0.00183	-0.00989	0.8899	0.0069	2.1299
41	SLV 13	0.01346	-0.00064	-0.01529	-0.2668	0.0112	-0.6388
41	SLV 14	0.01346	-0.00064	-0.01529	-0.2668	0.0112	-0.6388
41	SLV 15	0.01346	0.0005	-0.01529	0.267	0.0112	0.6391
41	SLV 16	0.01346	0.0005	-0.01529	0.267	0.0112	0.6391
42	SLU 1	-0.00139	-0.00004	-0.02369	0	0.0081	0
42	SLU 2	-0.04805	-0.00002	-0.10379	0	0.0682	0
42	SLU 3	-0.04805	-0.00002	-0.10379	0	0.0682	0
42	SLU 4	-0.00139	-0.00004	-0.02369	0	0.0081	0
42	SLU 5	-0.03639	-0.00002	-0.08377	0	0.0532	0
42	SLU 6	-0.04843	-0.00002	-0.10495	0	0.0687	0
42	SLU 7	-0.04843	-0.00002	-0.10495	0	0.0687	0
42	SLU 8	-0.00177	-0.00004	-0.02484	0	0.0087	0
42	SLU 9	-0.03677	-0.00002	-0.08492	0	0.0537	0
42	SLU 10	-0.00215	-0.00004	-0.02599	0	0.0092	0
42	SLU 11	-0.03714	-0.00003	-0.08607	0	0.0542	0
42	SLU 12	-0.00215	-0.00004	-0.02599	0	0.0092	0
42	SLU 13	-0.03714	-0.00003	-0.08607	0	0.0542	0
42	SLU 14	-0.04812	-0.00005	-0.10475	0.0001	0.0684	0
42	SLU 15	-0.04812	-0.00005	-0.10475	0.0001	0.0684	0
42	SLU 16	-0.00146	-0.00006	-0.02465	0	0.0083	0
42	SLU 17	-0.03646	-0.00005	-0.08473	0.0001	0.0533	0
42	SLU 18	-0.0485	-0.00005	-0.10591	0.0001	0.0689	0
42	SLU 19	-0.0485	-0.00005	-0.10591	0.0001	0.0689	0
42	SLU 20	-0.00184	-0.00007	-0.0258	0	0.0088	0
42	SLU 21	-0.03683	-0.00005	-0.08588	0.0001	0.0539	0
42	SLU 22	-0.00222	-0.00007	-0.02695	0.0001	0.0093	0
42	SLU 23	-0.03721	-0.00006	-0.08703	0.0001	0.0544	0
42	SLU 24	-0.00222	-0.00007	-0.02695	0.0001	0.0093	0
42	SLU 25	-0.03721	-0.00006	-0.08703	0.0001	0.0544	0
42	SLU 26	-0.00157	-0.00011	-0.02609	0.0002	0.0085	0
42	SLU 27	-0.03656	-0.0001	-0.08617	0.0002	0.0536	0

Nodo	Cont.	Spostamento			Rotazione		
Ind.	N.br.	ux	uy	uz	rx	ry	rz
42	SLU 28	-0.00157	-0.00011	-0.02609	0.0002	0.0085	0
42	SLU 29	-0.03656	-0.0001	-0.08617	0.0002	0.0536	0
42	SLU 30	-0.00194	-0.00011	-0.02724	0.0002	0.009	0
42	SLU 31	-0.03694	-0.0001	-0.08732	0.0002	0.0541	0
42	SLU 32	-0.00194	-0.00011	-0.02724	0.0002	0.009	0
42	SLU 33	-0.03694	-0.0001	-0.08732	0.0002	0.0541	0
42	SLU 34	-0.00139	-0.00004	-0.02369	0	0.0081	0
42	SLU 35	-0.04805	-0.00002	-0.10379	0	0.0682	0
42	SLU 36	-0.04805	-0.00002	-0.10379	0	0.0682	0
42	SLU 37	-0.00139	-0.00004	-0.02369	0	0.0081	0
42	SLU 38	-0.03639	-0.00002	-0.08377	0	0.0532	0
42	SLU 39	-0.04843	-0.00002	-0.10495	0	0.0687	0
42	SLU 40	-0.04843	-0.00002	-0.10495	0	0.0687	0
42	SLU 41	-0.00177	-0.00004	-0.02484	0	0.0087	0
42	SLU 42	-0.03677	-0.00002	-0.08492	0	0.0537	0
42	SLU 43	-0.00215	-0.00004	-0.02599	0	0.0092	0
42	SLU 44	-0.03714	-0.00003	-0.08607	0	0.0542	0
42	SLU 45	-0.00215	-0.00004	-0.02599	0	0.0092	0
42	SLU 46	-0.03714	-0.00003	-0.08607	0	0.0542	0
42	SLU 47	-0.04812	-0.00005	-0.10475	0.0001	0.0684	0
42	SLU 48	-0.04812	-0.00005	-0.10475	0.0001	0.0684	0
42	SLU 49	-0.00146	-0.00006	-0.02465	0	0.0083	0
42	SLU 50	-0.03646	-0.00005	-0.08473	0.0001	0.0533	0
42	SLU 51	-0.0485	-0.00005	-0.10591	0.0001	0.0689	0
42	SLU 52	-0.0485	-0.00005	-0.10591	0.0001	0.0689	0
42	SLU 53	-0.00184	-0.00007	-0.0258	0	0.0088	0
42	SLU 54	-0.03683	-0.00005	-0.08588	0.0001	0.0539	0
42	SLU 55	-0.00222	-0.00007	-0.02695	0.0001	0.0093	0
42	SLU 56	-0.03721	-0.00006	-0.08703	0.0001	0.0544	0
42	SLU 57	-0.00222	-0.00007	-0.02695	0.0001	0.0093	0
42	SLU 58	-0.03721	-0.00006	-0.08703	0.0001	0.0544	0
42	SLU 59	-0.00157	-0.00011	-0.02609	0.0002	0.0085	0
42	SLU 60	-0.03656	-0.0001	-0.08617	0.0002	0.0536	0
42	SLU 61	-0.00157	-0.00011	-0.02609	0.0002	0.0085	0
42	SLU 62	-0.03656	-0.0001	-0.08617	0.0002	0.0536	0
42	SLU 63	-0.00194	-0.00011	-0.02724	0.0002	0.009	0
42	SLU 64	-0.03694	-0.0001	-0.08732	0.0002	0.0541	0
42	SLU 65	-0.00194	-0.00011	-0.02724	0.0002	0.009	0
42	SLU 66	-0.03694	-0.0001	-0.08732	0.0002	0.0541	0
42	SLU 67	-0.00181	-0.00005	-0.0308	0	0.0106	0
42	SLU 68	-0.04847	-0.00003	-0.1109	0	0.0706	0
42	SLU 69	-0.04847	-0.00003	-0.1109	0	0.0706	0
42	SLU 70	-0.00181	-0.00005	-0.0308	0	0.0106	0
42	SLU 71	-0.03681	-0.00003	-0.09088	0	0.0556	0
42	SLU 72	-0.04885	-0.00004	-0.11205	0	0.0712	0
42	SLU 73	-0.04885	-0.00003	-0.11205	0	0.0712	0
42	SLU 74	-0.00219	-0.00005	-0.03195	0	0.0111	0
42	SLU 75	-0.03718	-0.00004	-0.09203	0	0.0561	0
42	SLU 76	-0.00256	-0.00005	-0.0331	0	0.0116	0
42	SLU 77	-0.03756	-0.00004	-0.09318	0	0.0567	0
42	SLU 78	-0.00256	-0.00005	-0.0331	0	0.0116	0
42	SLU 79	-0.03756	-0.00004	-0.09318	0	0.0567	0
42	SLU 80	-0.04854	-0.00006	-0.11186	0.0001	0.0708	0
42	SLU 81	-0.04854	-0.00006	-0.11186	0.0001	0.0708	0
42	SLU 82	-0.00188	-0.00008	-0.03176	0	0.0107	0
42	SLU 83	-0.03688	-0.00006	-0.09184	0.0001	0.0558	0
42	SLU 84	-0.04892	-0.00006	-0.11301	0.0001	0.0713	0
42	SLU 85	-0.04892	-0.00006	-0.11301	0.0001	0.0713	0
42	SLU 86	-0.00226	-0.00008	-0.03291	0	0.0112	0
42	SLU 87	-0.03725	-0.00006	-0.09299	0.0001	0.0563	0
42	SLU 88	-0.00263	-0.00008	-0.03406	0.0001	0.0118	0
42	SLU 89	-0.03763	-0.00007	-0.09414	0.0001	0.0568	0
42	SLU 90	-0.00263	-0.00008	-0.03406	0.0001	0.0118	0
42	SLU 91	-0.03763	-0.00007	-0.09414	0.0001	0.0568	0
42	SLU 92	-0.00198	-0.00012	-0.0332	0.0002	0.011	0
42	SLU 93	-0.03698	-0.00011	-0.09328	0.0002	0.056	0
42	SLU 94	-0.00198	-0.00012	-0.0332	0.0002	0.011	0
42	SLU 95	-0.03698	-0.00011	-0.09328	0.0002	0.056	0
42	SLU 96	-0.00236	-0.00013	-0.03435	0.0002	0.0115	0
42	SLU 97	-0.03736	-0.00011	-0.09443	0.0002	0.0565	0
42	SLU 98	-0.00236	-0.00012	-0.03435	0.0002	0.0115	0
42	SLU 99	-0.03736	-0.00011	-0.09443	0.0002	0.0565	0
42	SLU 100	-0.00181	-0.00005	-0.0308	0	0.0106	0
42	SLU 101	-0.04847	-0.00003	-0.1109	0	0.0706	0
42	SLU 102	-0.04847	-0.00003	-0.1109	0	0.0706	0
42	SLU 103	-0.00181	-0.00005	-0.0308	0	0.0106	0
42	SLU 104	-0.03681	-0.00003	-0.09088	0	0.0556	0
42	SLU 105	-0.04885	-0.00004	-0.11205	0	0.0712	0
42	SLU 106	-0.04885	-0.00003	-0.11205	0	0.0712	0
42	SLU 107	-0.00219	-0.00005	-0.03195	0	0.0111	0
42	SLU 108	-0.03718	-0.00004	-0.09203	0	0.0561	0
42	SLU 109	-0.00256	-0.00005	-0.0331	0	0.0116	0
42	SLU 110	-0.03756	-0.00004	-0.09318	0	0.0567	0
42	SLU 111	-0.00256	-0.00005	-0.0331	0	0.0116	0
42	SLU 112	-0.03756	-0.00004	-0.09318	0	0.0567	0
42	SLU 113	-0.04854	-0.00006	-0.11186	0.0001	0.0708	0
42	SLU 114	-0.04854	-0.00006	-0.11186	0.0001	0.0708	0
42	SLU 115	-0.00188	-0.00008	-0.03176	0	0.0107	0
42	SLU 116	-0.03688	-0.00006	-0.09184	0.0001	0.0558	0
42	SLU 117	-0.04892	-0.00006	-0.11301	0.0001	0.0713	0
42	SLU 118	-0.04892	-0.00006	-0.11301	0.0001	0.0713	0
42	SLU 119	-0.00226	-0.00008	-0.03291	0	0.0112	0
42	SLU 120	-0.03725	-0.00006	-0.09299	0.0001	0.0563	0
42	SLU 121	-0.00263	-0.00008	-0.03406	0.0001	0.0118	0
42	SLU 122	-0.03763	-0.00007	-0.09414	0.0001	0.0568	0

Nodo	Cont.	Spostamento			Rotazione		
Ind.	N.br.	ux	uy	uz	rx	ry	rz
42	SLU 123	-0.00263	-0.00008	-0.03406	0.0001	0.0118	0
42	SLU 124	-0.03763	-0.00007	-0.09414	0.0001	0.0568	0
42	SLU 125	-0.00198	-0.00012	-0.0332	0.0002	0.011	0
42	SLU 126	-0.03698	-0.00011	-0.09328	0.0002	0.056	0
42	SLU 127	-0.00198	-0.00012	-0.0332	0.0002	0.011	0
42	SLU 128	-0.03698	-0.00011	-0.09328	0.0002	0.056	0
42	SLU 129	-0.00236	-0.00013	-0.03435	0.0002	0.0115	0
42	SLU 130	-0.03736	-0.00011	-0.09443	0.0002	0.0565	0
42	SLU 131	-0.00236	-0.00012	-0.03435	0.0002	0.0115	0
42	SLU 132	-0.03736	-0.00011	-0.09443	0.0002	0.0565	0
42	SLE RA 1	-0.00139	-0.00004	-0.02369	0	0.0081	0
42	SLE RA 2	-0.0325	-0.00003	-0.07709	0	0.0482	0
42	SLE RA 3	-0.0325	-0.00003	-0.07709	0	0.0482	0
42	SLE RA 4	-0.00139	-0.00004	-0.02369	0	0.0081	0
42	SLE RA 5	-0.02472	-0.00003	-0.06374	0	0.0382	0
42	SLE RA 6	-0.03275	-0.00003	-0.07786	0	0.0485	0
42	SLE RA 7	-0.03275	-0.00003	-0.07786	0	0.0485	0
42	SLE RA 8	-0.00164	-0.00004	-0.02446	0	0.0085	0
42	SLE RA 9	-0.02497	-0.00003	-0.06451	0	0.0385	0
42	SLE RA 10	-0.0019	-0.00004	-0.02523	0	0.0088	0
42	SLE RA 11	-0.02523	-0.00003	-0.06528	0	0.0389	0
42	SLE RA 12	-0.0019	-0.00004	-0.02523	0	0.0088	0
42	SLE RA 13	-0.02523	-0.00003	-0.06528	0	0.0389	0
42	SLE RA 14	-0.03255	-0.00005	-0.07773	0.0001	0.0483	0
42	SLE RA 15	-0.03255	-0.00005	-0.07773	0.0001	0.0483	0
42	SLE RA 16	-0.00144	-0.00006	-0.02433	0	0.0082	0
42	SLE RA 17	-0.02477	-0.00005	-0.06438	0	0.0383	0
42	SLE RA 18	-0.0328	-0.00005	-0.0785	0.0001	0.0486	0
42	SLE RA 19	-0.0328	-0.00005	-0.0785	0.0001	0.0486	0
42	SLE RA 20	-0.00169	-0.00006	-0.0251	0	0.0086	0
42	SLE RA 21	-0.02502	-0.00005	-0.06515	0	0.0386	0
42	SLE RA 22	-0.00194	-0.00006	-0.02587	0	0.0089	0
42	SLE RA 23	-0.02527	-0.00005	-0.06592	0.0001	0.039	0
42	SLE RA 24	-0.00194	-0.00006	-0.02587	0	0.0089	0
42	SLE RA 25	-0.02527	-0.00005	-0.06592	0	0.039	0
42	SLE RA 26	-0.00151	-0.00009	-0.02529	0.0001	0.0084	0
42	SLE RA 27	-0.02484	-0.00008	-0.06534	0.0001	0.0384	0
42	SLE RA 28	-0.00151	-0.00009	-0.02529	0.0001	0.0084	0
42	SLE RA 29	-0.02484	-0.00008	-0.06534	0.0001	0.0384	0
42	SLE RA 30	-0.00176	-0.00009	-0.02606	0.0001	0.0087	0
42	SLE RA 31	-0.02509	-0.00008	-0.06611	0.0001	0.0388	0
42	SLE RA 32	-0.00176	-0.00009	-0.02606	0.0001	0.0087	0
42	SLE RA 33	-0.02509	-0.00008	-0.06611	0.0001	0.0388	0
42	SLE FR 1	-0.00139	-0.00004	-0.02369	0	0.0081	0
42	SLE FR 2	-0.02472	-0.00003	-0.06374	0	0.0382	0
42	SLE FR 3	-0.00139	-0.00004	-0.02369	0	0.0081	0
42	SLE FR 4	-0.00149	-0.00004	-0.024	0	0.0083	0
42	SLE FR 5	-0.00144	-0.00006	-0.02433	0	0.0082	0
42	SLE QP 1	-0.00139	-0.00004	-0.02369	0	0.0081	0
42	SLO 1	-0.01103	-0.00229	-0.01518	0.2299	0.0091	-0.0023
42	SLO 2	-0.01103	-0.00229	-0.01518	0.2299	0.0091	-0.0023
42	SLO 3	-0.01103	0.00221	-0.01518	-0.2299	0.0091	0.0024
42	SLO 4	-0.01103	0.00221	-0.01518	-0.2299	0.0091	0.0024
42	SLO 5	-0.00429	-0.00753	-0.02114	0.7662	0.0084	-0.0079
42	SLO 6	-0.00429	-0.00753	-0.02114	0.7662	0.0084	-0.0079
42	SLO 7	-0.00429	0.00745	-0.02114	-0.7662	0.0084	0.0079
42	SLO 8	-0.00429	0.00745	-0.02114	-0.7662	0.0084	0.0079
42	SLO 9	0.0015	-0.00753	-0.02624	0.7662	0.0078	-0.0079
42	SLO 10	0.0015	-0.00753	-0.02624	0.7662	0.0078	-0.0079
42	SLO 11	0.0015	0.00745	-0.02624	-0.7662	0.0078	0.0079
42	SLO 12	0.0015	0.00745	-0.02624	-0.7662	0.0078	0.0079
42	SLO 13	0.00825	-0.00229	-0.0322	0.2299	0.0072	-0.0023
42	SLO 14	0.00825	-0.00229	-0.0322	0.2299	0.0072	-0.0023
42	SLO 15	0.00825	0.00221	-0.0322	-0.2299	0.0072	0.0024
42	SLO 16	0.00825	0.00221	-0.0322	-0.2299	0.0072	0.0024
42	SLD 1	-0.00932	-0.00212	-0.0167	0.2124	0.0089	-0.0022
42	SLD 2	-0.00932	-0.00212	-0.0167	0.2124	0.0089	-0.0022
42	SLD 3	-0.00932	0.00204	-0.0167	-0.2124	0.0089	0.0022
42	SLD 4	-0.00932	0.00204	-0.0167	-0.2124	0.0089	0.0022
42	SLD 5	-0.00377	-0.00696	-0.02159	0.708	0.0084	-0.0073
42	SLD 6	-0.00377	-0.00696	-0.02159	0.708	0.0084	-0.0073
42	SLD 7	-0.00377	0.00688	-0.02159	-0.708	0.0084	0.0073
42	SLD 8	-0.00377	0.00688	-0.02159	-0.708	0.0084	0.0073
42	SLD 9	0.00098	-0.00696	-0.02579	0.708	0.0079	-0.0073
42	SLD 10	0.00098	-0.00696	-0.02579	0.708	0.0079	-0.0073
42	SLD 11	0.00098	0.00688	-0.02579	-0.708	0.0079	0.0073
42	SLD 12	0.00098	0.00688	-0.02579	-0.708	0.0079	0.0073
42	SLD 13	0.00653	-0.00212	-0.03069	0.2124	0.0073	-0.0022
42	SLD 14	0.00653	-0.00212	-0.03069	0.2124	0.0073	-0.0022
42	SLD 15	0.00653	0.00204	-0.03069	-0.2124	0.0073	0.0022
42	SLD 16	0.00653	0.00204	-0.03069	-0.2124	0.0073	0.0022
42	SLV 1	-0.01847	-0.00551	-0.00862	0.5602	0.0098	-0.0057
42	SLV 2	-0.01847	-0.00551	-0.00862	0.5602	0.0098	-0.0057
42	SLV 3	-0.01847	0.00544	-0.00862	-0.5602	0.0098	0.0058
42	SLV 4	-0.01847	0.00544	-0.00862	-0.5602	0.0098	0.0058
42	SLV 5	-0.00652	-0.01829	-0.01917	1.8673	0.0086	-0.0192
42	SLV 6	-0.00652	-0.01829	-0.01917	1.8673	0.0086	-0.0192
42	SLV 7	-0.00652	0.01821	-0.01917	-1.8673	0.0086	0.0192
42	SLV 8	-0.00652	0.01821	-0.01917	-1.8673	0.0086	0.0192
42	SLV 9	0.00373	-0.01829	-0.02821	1.8673	0.0076	-0.0192
42	SLV 10	0.00373	-0.01829	-0.02821	1.8673	0.0076	-0.0192
42	SLV 11	0.00373	0.01821	-0.02821	-1.8673	0.0076	0.0192
42	SLV 12	0.00373	0.01821	-0.02821	-1.8673	0.0076	0.0192
42	SLV 13	0.01568	-0.00551	-0.03877	0.5602	0.0064	-0.0057
42	SLV 14	0.01568	-0.00551	-0.03877	0.5602	0.0064	-0.0057

Nodo	Cont.	Spostamento			Rotazione		
Ind.	N.br.	ux	uy	uz	rx	ry	rz
42	SLV 15	0.01568	0.00544	-0.03877	-0.5602	0.0064	0.0058
42	SLV 16	0.01568	0.00544	-0.03877	-0.5602	0.0064	0.0058
43	SLU 1	0.00139	-0.00004	-0.02369	0	-0.0081	0
43	SLU 2	0.04805	-0.00002	-0.10379	0	-0.0682	0
43	SLU 3	0.04805	-0.00002	-0.10379	0	-0.0682	0
43	SLU 4	0.00139	-0.00004	-0.02369	0	-0.0081	0
43	SLU 5	0.03639	-0.00002	-0.08377	0	-0.0532	0
43	SLU 6	0.04824	-0.00002	-0.10513	0	-0.0688	0
43	SLU 7	0.04824	-0.00002	-0.10513	0	-0.0688	0
43	SLU 8	0.00158	-0.00004	-0.02503	0	-0.0087	0
43	SLU 9	0.03657	-0.00002	-0.08511	0	-0.0537	0
43	SLU 10	0.00176	-0.00004	-0.02637	0	-0.0092	0
43	SLU 11	0.03676	-0.00003	-0.08645	0	-0.0543	0
43	SLU 12	0.00176	-0.00004	-0.02637	0	-0.0092	0
43	SLU 13	0.03676	-0.00003	-0.08645	0	-0.0543	0
43	SLU 14	0.0478	-0.00005	-0.10507	0.0001	-0.0684	0
43	SLU 15	0.0478	-0.00005	-0.10507	0.0001	-0.0684	0
43	SLU 16	0.00114	-0.00006	-0.02497	0	-0.0083	0
43	SLU 17	0.03614	-0.00005	-0.08504	0.0001	-0.0534	0
43	SLU 18	0.04799	-0.00005	-0.10641	0.0001	-0.069	0
43	SLU 19	0.04799	-0.00005	-0.10641	0.0001	-0.069	0
43	SLU 20	0.00133	-0.00007	-0.02631	0	-0.0089	0
43	SLU 21	0.03632	-0.00005	-0.08638	0.0001	-0.054	0
43	SLU 22	0.00151	-0.00007	-0.02764	0.0001	-0.0095	0
43	SLU 23	0.03651	-0.00006	-0.08772	0.0001	-0.0545	0
43	SLU 24	0.00151	-0.00007	-0.02764	0.0001	-0.0095	0
43	SLU 25	0.03651	-0.00006	-0.08772	0.0001	-0.0545	0
43	SLU 26	0.00077	-0.00011	-0.02688	0.0002	-0.0087	0
43	SLU 27	0.03576	-0.0001	-0.08695	0.0002	-0.0537	0
43	SLU 28	0.00077	-0.00011	-0.02688	0.0002	-0.0087	0
43	SLU 29	0.03576	-0.0001	-0.08695	0.0002	-0.0537	0
43	SLU 30	0.00095	-0.00011	-0.02822	0.0002	-0.0092	0
43	SLU 31	0.03595	-0.0001	-0.08829	0.0002	-0.0543	0
43	SLU 32	0.00095	-0.00011	-0.02822	0.0002	-0.0092	0
43	SLU 33	0.03595	-0.0001	-0.08829	0.0002	-0.0543	0
43	SLU 34	0.00139	-0.00004	-0.02369	0	-0.0081	0
43	SLU 35	0.04805	-0.00002	-0.10379	0	-0.0682	0
43	SLU 36	0.04805	-0.00002	-0.10379	0	-0.0682	0
43	SLU 37	0.00139	-0.00004	-0.02369	0	-0.0081	0
43	SLU 38	0.03639	-0.00002	-0.08377	0	-0.0532	0
43	SLU 39	0.04824	-0.00002	-0.10513	0	-0.0688	0
43	SLU 40	0.04824	-0.00002	-0.10513	0	-0.0688	0
43	SLU 41	0.00158	-0.00004	-0.02503	0	-0.0087	0
43	SLU 42	0.03657	-0.00002	-0.08511	0	-0.0537	0
43	SLU 43	0.00176	-0.00004	-0.02637	0	-0.0092	0
43	SLU 44	0.03676	-0.00003	-0.08645	0	-0.0543	0
43	SLU 45	0.00176	-0.00004	-0.02637	0	-0.0092	0
43	SLU 46	0.03676	-0.00003	-0.08645	0	-0.0543	0
43	SLU 47	0.0478	-0.00005	-0.10507	0.0001	-0.0684	0
43	SLU 48	0.0478	-0.00005	-0.10507	0.0001	-0.0684	0
43	SLU 49	0.00114	-0.00006	-0.02497	0	-0.0083	0
43	SLU 50	0.03614	-0.00005	-0.08504	0.0001	-0.0534	0
43	SLU 51	0.04799	-0.00005	-0.10641	0.0001	-0.069	0
43	SLU 52	0.04799	-0.00005	-0.10641	0.0001	-0.069	0
43	SLU 53	0.00133	-0.00007	-0.02631	0	-0.0089	0
43	SLU 54	0.03632	-0.00005	-0.08638	0.0001	-0.054	0
43	SLU 55	0.00151	-0.00007	-0.02764	0.0001	-0.0095	0
43	SLU 56	0.03651	-0.00006	-0.08772	0.0001	-0.0545	0
43	SLU 57	0.00151	-0.00007	-0.02764	0.0001	-0.0095	0
43	SLU 58	0.03651	-0.00006	-0.08772	0.0001	-0.0545	0
43	SLU 59	0.00077	-0.00011	-0.02688	0.0002	-0.0087	0
43	SLU 60	0.03576	-0.0001	-0.08695	0.0002	-0.0537	0
43	SLU 61	0.00077	-0.00011	-0.02688	0.0002	-0.0087	0
43	SLU 62	0.03576	-0.0001	-0.08695	0.0002	-0.0537	0
43	SLU 63	0.00095	-0.00011	-0.02822	0.0002	-0.0092	0
43	SLU 64	0.03595	-0.0001	-0.08829	0.0002	-0.0543	0
43	SLU 65	0.00095	-0.00011	-0.02822	0.0002	-0.0092	0
43	SLU 66	0.03595	-0.0001	-0.08829	0.0002	-0.0543	0
43	SLU 67	0.00181	-0.00005	-0.0308	0	-0.0106	0
43	SLU 68	0.04847	-0.00003	-0.1109	0	-0.0706	0
43	SLU 69	0.04847	-0.00003	-0.1109	0	-0.0706	0
43	SLU 70	0.00181	-0.00005	-0.0308	0	-0.0106	0
43	SLU 71	0.03681	-0.00003	-0.09088	0	-0.0556	0
43	SLU 72	0.04866	-0.00004	-0.11224	0	-0.0712	0
43	SLU 73	0.04866	-0.00003	-0.11224	0	-0.0712	0
43	SLU 74	0.002	-0.00005	-0.03214	0	-0.0111	0
43	SLU 75	0.03699	-0.00004	-0.09222	0	-0.0562	0
43	SLU 76	0.00218	-0.00005	-0.03348	0	-0.0117	0
43	SLU 77	0.03718	-0.00004	-0.09356	0	-0.0567	0
43	SLU 78	0.00218	-0.00005	-0.03348	0	-0.0117	0
43	SLU 79	0.03718	-0.00004	-0.09356	0	-0.0567	0
43	SLU 80	0.04822	-0.00006	-0.11218	0.0001	-0.0708	0
43	SLU 81	0.04822	-0.00006	-0.11218	0.0001	-0.0708	0
43	SLU 82	0.00156	-0.00008	-0.03207	0	-0.0108	0
43	SLU 83	0.03656	-0.00006	-0.09215	0.0001	-0.0558	0
43	SLU 84	0.04841	-0.00006	-0.11352	0.0001	-0.0714	0
43	SLU 85	0.04841	-0.00006	-0.11352	0.0001	-0.0714	0
43	SLU 86	0.00175	-0.00008	-0.03341	0	-0.0113	0
43	SLU 87	0.03674	-0.00006	-0.09349	0.0001	-0.0564	0
43	SLU 88	0.00193	-0.00008	-0.03475	0.0001	-0.0119	0
43	SLU 89	0.03693	-0.00007	-0.09483	0.0001	-0.057	0
43	SLU 90	0.00193	-0.00008	-0.03475	0.0001	-0.0119	0
43	SLU 91	0.03693	-0.00007	-0.09483	0.0001	-0.057	0
43	SLU 92	0.00119	-0.00012	-0.03398	0.0002	-0.0111	0
43	SLU 93	0.03618	-0.00011	-0.09406	0.0002	-0.0562	0

Nodo	Cont.	Spostamento			Rotazione		
Ind.	N.br.	ux	uy	uz	rx	ry	rz
43	SLU 94	0.00119	-0.00012	-0.03398	0.0002	-0.0111	0
43	SLU 95	0.03618	-0.00011	-0.09406	0.0002	-0.0562	0
43	SLU 96	0.00137	-0.00013	-0.03532	0.0002	-0.0117	0
43	SLU 97	0.03637	-0.00011	-0.0954	0.0002	-0.0567	0
43	SLU 98	0.00137	-0.00012	-0.03532	0.0002	-0.0117	0
43	SLU 99	0.03637	-0.00011	-0.0954	0.0002	-0.0567	0
43	SLU 100	0.00181	-0.00005	-0.0308	0	-0.0106	0
43	SLU 101	0.04847	-0.00003	-0.1109	0	-0.0706	0
43	SLU 102	0.04847	-0.00003	-0.1109	0	-0.0706	0
43	SLU 103	0.00181	-0.00005	-0.0308	0	-0.0106	0
43	SLU 104	0.03681	-0.00003	-0.09088	0	-0.0556	0
43	SLU 105	0.04866	-0.00004	-0.11224	0	-0.0712	0
43	SLU 106	0.04866	-0.00003	-0.11224	0	-0.0712	0
43	SLU 107	0.002	-0.00005	-0.03214	0	-0.0111	0
43	SLU 108	0.03699	-0.00004	-0.09222	0	-0.0562	0
43	SLU 109	0.00218	-0.00005	-0.03348	0	-0.0117	0
43	SLU 110	0.03718	-0.00004	-0.09356	0	-0.0567	0
43	SLU 111	0.00218	-0.00005	-0.03348	0	-0.0117	0
43	SLU 112	0.03718	-0.00004	-0.09356	0	-0.0567	0
43	SLU 113	0.04822	-0.00006	-0.11218	0.0001	-0.0708	0
43	SLU 114	0.04822	-0.00006	-0.11218	0.0001	-0.0708	0
43	SLU 115	0.00156	-0.00008	-0.03207	0	-0.0108	0
43	SLU 116	0.03656	-0.00006	-0.09215	0.0001	-0.0558	0
43	SLU 117	0.04841	-0.00006	-0.11352	0.0001	-0.0714	0
43	SLU 118	0.04841	-0.00006	-0.11352	0.0001	-0.0714	0
43	SLU 119	0.00175	-0.00008	-0.03341	0	-0.0113	0
43	SLU 120	0.03674	-0.00006	-0.09349	0.0001	-0.0564	0
43	SLU 121	0.00193	-0.00008	-0.03475	0.0001	-0.0119	0
43	SLU 122	0.03693	-0.00007	-0.09483	0.0001	-0.057	0
43	SLU 123	0.00193	-0.00008	-0.03475	0.0001	-0.0119	0
43	SLU 124	0.03693	-0.00007	-0.09483	0.0001	-0.057	0
43	SLU 125	0.00119	-0.00012	-0.03398	0.0002	-0.0111	0
43	SLU 126	0.03618	-0.00011	-0.09406	0.0002	-0.0562	0
43	SLU 127	0.00119	-0.00012	-0.03398	0.0002	-0.0111	0
43	SLU 128	0.03618	-0.00011	-0.09406	0.0002	-0.0562	0
43	SLU 129	0.00137	-0.00013	-0.03532	0.0002	-0.0117	0
43	SLU 130	0.03637	-0.00011	-0.0954	0.0002	-0.0567	0
43	SLU 131	0.00137	-0.00012	-0.03532	0.0002	-0.0117	0
43	SLU 132	0.03637	-0.00011	-0.0954	0.0002	-0.0567	0
43	SLE RA 1	0.00139	-0.00004	-0.02369	0	-0.0081	0
43	SLE RA 2	0.0325	-0.00003	-0.07709	0	-0.0482	0
43	SLE RA 3	0.0325	-0.00003	-0.07709	0	-0.0482	0
43	SLE RA 4	0.00139	-0.00004	-0.02369	0	-0.0081	0
43	SLE RA 5	0.02472	-0.00003	-0.06374	0	-0.0382	0
43	SLE RA 6	0.03262	-0.00003	-0.07799	0	-0.0485	0
43	SLE RA 7	0.03262	-0.00003	-0.07799	0	-0.0485	0
43	SLE RA 8	0.00152	-0.00004	-0.02458	0	-0.0085	0
43	SLE RA 9	0.02485	-0.00003	-0.06464	0	-0.0385	0
43	SLE RA 10	0.00164	-0.00004	-0.02548	0	-0.0089	0
43	SLE RA 11	0.02497	-0.00003	-0.06553	0	-0.0389	0
43	SLE RA 12	0.00164	-0.00004	-0.02548	0	-0.0089	0
43	SLE RA 13	0.02497	-0.00003	-0.06553	0	-0.0389	0
43	SLE RA 14	0.03233	-0.00005	-0.07794	0.0001	-0.0483	0
43	SLE RA 15	0.03233	-0.00005	-0.07794	0.0001	-0.0483	0
43	SLE RA 16	0.00123	-0.00006	-0.02454	0	-0.0083	0
43	SLE RA 17	0.02456	-0.00005	-0.06459	0	-0.0383	0
43	SLE RA 18	0.03246	-0.00005	-0.07884	0.0001	-0.0487	0
43	SLE RA 19	0.03246	-0.00005	-0.07884	0.0001	-0.0487	0
43	SLE RA 20	0.00135	-0.00006	-0.02543	0	-0.0086	0
43	SLE RA 21	0.02468	-0.00005	-0.06549	0	-0.0387	0
43	SLE RA 22	0.00147	-0.00006	-0.02633	0	-0.009	0
43	SLE RA 23	0.0248	-0.00005	-0.06638	0.0001	-0.0391	0
43	SLE RA 24	0.00147	-0.00006	-0.02633	0	-0.009	0
43	SLE RA 25	0.0248	-0.00005	-0.06638	0	-0.0391	0
43	SLE RA 26	0.00098	-0.00009	-0.02581	0.0001	-0.0085	0
43	SLE RA 27	0.02431	-0.00008	-0.06587	0.0001	-0.0385	0
43	SLE RA 28	0.00098	-0.00009	-0.02581	0.0001	-0.0085	0
43	SLE RA 29	0.02431	-0.00008	-0.06587	0.0001	-0.0385	0
43	SLE RA 30	0.0011	-0.00009	-0.02671	0.0001	-0.0089	0
43	SLE RA 31	0.02443	-0.00008	-0.06676	0.0001	-0.0389	0
43	SLE RA 32	0.0011	-0.00009	-0.02671	0.0001	-0.0089	0
43	SLE RA 33	0.02443	-0.00008	-0.06676	0.0001	-0.0389	0
43	SLE FR 1	0.00139	-0.00004	-0.02369	0	-0.0081	0
43	SLE FR 2	0.02472	-0.00003	-0.06374	0	-0.0382	0
43	SLE FR 3	0.00139	-0.00004	-0.02369	0	-0.0081	0
43	SLE FR 4	0.00144	-0.00004	-0.02405	0	-0.0083	0
43	SLE FR 5	0.00123	-0.00006	-0.02454	0	-0.0083	0
43	SLE QP 1	0.00139	-0.00004	-0.02369	0	-0.0081	0
43	SLO 1	-0.00825	-0.00229	-0.0322	0.2299	-0.0072	0.0023
43	SLO 2	-0.00825	-0.00229	-0.0322	0.2299	-0.0072	0.0023
43	SLO 3	-0.00825	0.00221	-0.0322	-0.2299	-0.0072	-0.0024
43	SLO 4	-0.00825	0.00221	-0.0322	-0.2299	-0.0072	-0.0024
43	SLO 5	-0.0015	-0.00753	-0.02624	0.7662	-0.0078	0.0079
43	SLO 6	-0.0015	-0.00753	-0.02624	0.7662	-0.0078	0.0079
43	SLO 7	-0.0015	0.00745	-0.02624	-0.7662	-0.0078	-0.0079
43	SLO 8	-0.0015	0.00745	-0.02624	-0.7662	-0.0078	-0.0079
43	SLO 9	0.00429	-0.00753	-0.02114	0.7662	-0.0084	0.0079
43	SLO 10	0.00429	-0.00753	-0.02114	0.7662	-0.0084	0.0079
43	SLO 11	0.00429	0.00745	-0.02114	-0.7662	-0.0084	-0.0079
43	SLO 12	0.00429	0.00745	-0.02114	-0.7662	-0.0084	-0.0079
43	SLO 13	0.01103	-0.00229	-0.01518	0.2299	-0.0091	0.0023
43	SLO 14	0.01103	-0.00229	-0.01518	0.2299	-0.0091	0.0023
43	SLO 15	0.01103	0.00221	-0.01518	-0.2299	-0.0091	-0.0024
43	SLO 16	0.01103	0.00221	-0.01518	-0.2299	-0.0091	-0.0024
43	SLD 1	-0.00653	-0.00212	-0.03069	0.2124	-0.0073	0.0022

Nodo	Cont.	Spostamento			Rotazione		
Ind.	N.br.	ux	uy	uz	rx	ry	rz
43	SLD 2	-0.00653	-0.00212	-0.03069	0.2124	-0.0073	0.0022
43	SLD 3	-0.00653	0.00204	-0.03069	-0.2124	-0.0073	-0.0022
43	SLD 4	-0.00653	0.00204	-0.03069	-0.2124	-0.0073	-0.0022
43	SLD 5	-0.00098	-0.00696	-0.02579	0.708	-0.0079	0.0073
43	SLD 6	-0.00098	-0.00696	-0.02579	0.708	-0.0079	0.0073
43	SLD 7	-0.00098	0.00688	-0.02579	-0.708	-0.0079	-0.0073
43	SLD 8	-0.00098	0.00688	-0.02579	-0.708	-0.0079	-0.0073
43	SLD 9	0.00377	-0.00696	-0.02159	0.708	-0.0084	0.0073
43	SLD 10	0.00377	-0.00696	-0.02159	0.708	-0.0084	0.0073
43	SLD 11	0.00377	0.00688	-0.02159	-0.708	-0.0084	-0.0073
43	SLD 12	0.00377	0.00688	-0.02159	-0.708	-0.0084	-0.0073
43	SLD 13	0.00932	-0.00212	-0.0167	0.2124	-0.0089	0.0022
43	SLD 14	0.00932	-0.00212	-0.0167	0.2124	-0.0089	0.0022
43	SLD 15	0.00932	0.00204	-0.0167	-0.2124	-0.0089	-0.0022
43	SLD 16	0.00932	0.00204	-0.0167	-0.2124	-0.0089	-0.0022
43	SLV 1	-0.01568	-0.00551	-0.03877	0.5602	-0.0064	0.0057
43	SLV 2	-0.01568	-0.00551	-0.03877	0.5602	-0.0064	0.0057
43	SLV 3	-0.01568	0.00544	-0.03877	-0.5602	-0.0064	-0.0058
43	SLV 4	-0.01568	0.00544	-0.03877	-0.5602	-0.0064	-0.0058
43	SLV 5	-0.00373	-0.01829	-0.02821	1.8673	-0.0076	0.0192
43	SLV 6	-0.00373	-0.01829	-0.02821	1.8673	-0.0076	0.0192
43	SLV 7	-0.00373	0.01821	-0.02821	-1.8673	-0.0076	-0.0192
43	SLV 8	-0.00373	0.01821	-0.02821	-1.8673	-0.0076	-0.0192
43	SLV 9	0.00652	-0.01829	-0.01917	1.8673	-0.0086	0.0192
43	SLV 10	0.00652	-0.01829	-0.01917	1.8673	-0.0086	0.0192
43	SLV 11	0.00652	0.01821	-0.01917	-1.8673	-0.0086	-0.0192
43	SLV 12	0.00652	0.01821	-0.01917	-1.8673	-0.0086	-0.0192
43	SLV 13	0.01847	-0.00551	-0.00862	0.5602	-0.0098	0.0057
43	SLV 14	0.01847	-0.00551	-0.00862	0.5602	-0.0098	0.0057
43	SLV 15	0.01847	0.00544	-0.00862	-0.5602	-0.0098	-0.0058
43	SLV 16	0.01847	0.00544	-0.00862	-0.5602	-0.0098	-0.0058
44	SLU 1	0.00426	-0.00007	-0.00757	0.0001	-0.0051	-0.0001
44	SLU 2	0.07527	-0.00007	0.00292	0.0001	-0.0204	-0.0002
44	SLU 3	0.07527	-0.00007	0.00292	0.0001	-0.0204	-0.0002
44	SLU 4	0.00426	-0.00007	-0.00757	0.0001	-0.0051	-0.0002
44	SLU 5	0.05751	-0.00007	0.0003	0.0001	-0.0165	-0.0002
44	SLU 6	0.07577	-0.00007	0.00269	0.0001	-0.0207	-0.0002
44	SLU 7	0.07577	-0.00007	0.00269	0.0001	-0.0207	-0.0002
44	SLU 8	0.00476	-0.00007	-0.00781	0.0001	-0.0055	-0.0002
44	SLU 9	0.05801	-0.00007	0.00006	0.0001	-0.0169	-0.0002
44	SLU 10	0.00525	-0.00007	-0.00804	0.0001	-0.0058	-0.0002
44	SLU 11	0.05851	-0.00008	-0.00017	0.0001	-0.0173	-0.0002
44	SLU 12	0.00525	-0.00007	-0.00804	0.0001	-0.0058	-0.0002
44	SLU 13	0.05851	-0.00008	-0.00017	0.0001	-0.0173	-0.0002
44	SLU 14	0.07525	-0.00009	0.0024	0.0001	-0.0208	0
44	SLU 15	0.07525	-0.00009	0.0024	0.0001	-0.0208	-0.0001
44	SLU 16	0.00424	-0.00009	-0.00809	0.0001	-0.0055	0
44	SLU 17	0.0575	-0.00009	-0.00022	0.0001	-0.017	-0.0001
44	SLU 18	0.07575	-0.00009	0.00217	0.0001	-0.0211	-0.0001
44	SLU 19	0.07575	-0.00009	0.00217	0.0001	-0.0211	-0.0001
44	SLU 20	0.00474	-0.00009	-0.00833	0.0001	-0.0059	0
44	SLU 21	0.05799	-0.00009	-0.00046	0.0001	-0.0173	-0.0001
44	SLU 22	0.00524	-0.00009	-0.00856	0.0001	-0.0062	0
44	SLU 23	0.05849	-0.00009	-0.00069	0.0001	-0.0177	0
44	SLU 24	0.00524	-0.00009	-0.00856	0.0001	-0.0062	0
44	SLU 25	0.05849	-0.00009	-0.00069	0.0001	-0.0177	-0.0001
44	SLU 26	0.00421	-0.00011	-0.00887	0	-0.0061	0.0002
44	SLU 27	0.05747	-0.00011	-0.001	0	-0.0176	0.0002
44	SLU 28	0.00421	-0.00011	-0.00887	0	-0.0061	0.0002
44	SLU 29	0.05747	-0.00011	-0.001	0	-0.0176	0.0002
44	SLU 30	0.00471	-0.00012	-0.0091	0	-0.0065	0.0002
44	SLU 31	0.05797	-0.00012	-0.00123	0	-0.0179	0.0002
44	SLU 32	0.00471	-0.00012	-0.0091	0	-0.0065	0.0002
44	SLU 33	0.05797	-0.00012	-0.00123	0	-0.0179	0.0001
44	SLU 34	0.00426	-0.00007	-0.00757	0.0001	-0.0051	-0.0001
44	SLU 35	0.07527	-0.00007	0.00292	0.0001	-0.0204	-0.0002
44	SLU 36	0.07527	-0.00007	0.00292	0.0001	-0.0204	-0.0002
44	SLU 37	0.00426	-0.00007	-0.00757	0.0001	-0.0051	-0.0002
44	SLU 38	0.05751	-0.00007	0.0003	0.0001	-0.0165	-0.0002
44	SLU 39	0.07577	-0.00007	0.00269	0.0001	-0.0207	-0.0002
44	SLU 40	0.07577	-0.00007	0.00269	0.0001	-0.0207	-0.0002
44	SLU 41	0.00476	-0.00007	-0.00781	0.0001	-0.0055	-0.0002
44	SLU 42	0.05801	-0.00007	0.00006	0.0001	-0.0169	-0.0002
44	SLU 43	0.00525	-0.00007	-0.00804	0.0001	-0.0058	-0.0002
44	SLU 44	0.05851	-0.00008	-0.00017	0.0001	-0.0173	-0.0002
44	SLU 45	0.00525	-0.00007	-0.00804	0.0001	-0.0058	-0.0002
44	SLU 46	0.05851	-0.00008	-0.00017	0.0001	-0.0173	-0.0002
44	SLU 47	0.07525	-0.00009	0.0024	0.0001	-0.0208	0
44	SLU 48	0.07525	-0.00009	0.0024	0.0001	-0.0208	-0.0001
44	SLU 49	0.00424	-0.00009	-0.00809	0.0001	-0.0055	0
44	SLU 50	0.0575	-0.00009	-0.00022	0.0001	-0.017	-0.0001
44	SLU 51	0.07575	-0.00009	0.00217	0.0001	-0.0211	-0.0001
44	SLU 52	0.07575	-0.00009	0.00217	0.0001	-0.0211	-0.0001
44	SLU 53	0.00474	-0.00009	-0.00833	0.0001	-0.0059	0
44	SLU 54	0.05799	-0.00009	-0.00046	0.0001	-0.0173	-0.0001
44	SLU 55	0.00524	-0.00009	-0.00856	0.0001	-0.0062	0
44	SLU 56	0.05849	-0.00009	-0.00069	0.0001	-0.0177	0
44	SLU 57	0.00524	-0.00009	-0.00856	0.0001	-0.0062	0
44	SLU 58	0.05849	-0.00009	-0.00069	0.0001	-0.0177	-0.0001
44	SLU 59	0.00421	-0.00011	-0.00887	0	-0.0061	0.0002
44	SLU 60	0.05747	-0.00011	-0.001	0	-0.0176	0.0002
44	SLU 61	0.00421	-0.00011	-0.00887	0	-0.0061	0.0002
44	SLU 62	0.05747	-0.00011	-0.001	0	-0.0176	0.0002
44	SLU 63	0.00471	-0.00012	-0.0091	0	-0.0065	0.0002
44	SLU 64	0.05797	-0.00012	-0.00123	0	-0.0179	0.0002

Nodo	Cont.	Spostamento			Rotazione		
Ind.	N.br.	ux	uy	uz	rx	ry	rz
44	SLU 65	0.00471	-0.00012	-0.0091	0	-0.0065	0.0002
44	SLU 66	0.05797	-0.00012	-0.00123	0	-0.0179	0.0001
44	SLU 67	0.00553	-0.00009	-0.00985	0.0001	-0.0066	-0.0002
44	SLU 68	0.07654	-0.00009	0.00065	0.0002	-0.0219	-0.0002
44	SLU 69	0.07654	-0.00009	0.00065	0.0002	-0.0219	-0.0002
44	SLU 70	0.00553	-0.00009	-0.00985	0.0001	-0.0066	-0.0002
44	SLU 71	0.05879	-0.00009	-0.00197	0.0002	-0.0181	-0.0003
44	SLU 72	0.07704	-0.00009	0.00041	0.0002	-0.0222	-0.0002
44	SLU 73	0.07704	-0.00009	0.00041	0.0002	-0.0222	-0.0002
44	SLU 74	0.00603	-0.00009	-0.01008	0.0001	-0.007	-0.0002
44	SLU 75	0.05929	-0.00009	-0.00221	0.0002	-0.0184	-0.0003
44	SLU 76	0.00653	-0.0001	-0.01032	0.0001	-0.0073	-0.0002
44	SLU 77	0.05979	-0.0001	-0.00244	0.0002	-0.0188	-0.0002
44	SLU 78	0.00653	-0.0001	-0.01032	0.0001	-0.0073	-0.0002
44	SLU 79	0.05979	-0.0001	-0.00244	0.0002	-0.0188	-0.0002
44	SLU 80	0.07653	-0.00011	0.00013	0.0001	-0.0223	-0.0001
44	SLU 81	0.07653	-0.00011	0.00013	0.0001	-0.0223	-0.0001
44	SLU 82	0.00551	-0.00011	-0.01036	0.0001	-0.007	-0.0001
44	SLU 83	0.05877	-0.00011	-0.00249	0.0001	-0.0185	-0.0001
44	SLU 84	0.07702	-0.00011	-0.0001	0.0001	-0.0226	-0.0001
44	SLU 85	0.07702	-0.00011	-0.0001	0.0001	-0.0226	-0.0001
44	SLU 86	0.00601	-0.00011	-0.0106	0.0001	-0.0074	-0.0001
44	SLU 87	0.05927	-0.00011	-0.00273	0.0001	-0.0188	-0.0001
44	SLU 88	0.00651	-0.00011	-0.01083	0.0001	-0.0078	-0.0001
44	SLU 89	0.05977	-0.00011	-0.00296	0.0001	-0.0192	-0.0001
44	SLU 90	0.00651	-0.00011	-0.01083	0.0001	-0.0078	-0.0001
44	SLU 91	0.05977	-0.00011	-0.00296	0.0001	-0.0192	-0.0001
44	SLU 92	0.00549	-0.00013	-0.01114	0	-0.0077	0.0002
44	SLU 93	0.05875	-0.00014	-0.00327	0	-0.0191	0.0001
44	SLU 94	0.00549	-0.00013	-0.01114	0	-0.0077	0.0001
44	SLU 95	0.05875	-0.00014	-0.00327	0	-0.0191	0.0001
44	SLU 96	0.00599	-0.00014	-0.01137	0	-0.008	0.0001
44	SLU 97	0.05924	-0.00014	-0.0035	0	-0.0194	0.0001
44	SLU 98	0.00599	-0.00014	-0.01137	0	-0.008	0.0001
44	SLU 99	0.05924	-0.00014	-0.0035	0	-0.0194	0.0001
44	SLU 100	0.00553	-0.00009	-0.00985	0.0001	-0.0066	-0.0002
44	SLU 101	0.07654	-0.00009	0.00065	0.0002	-0.0219	-0.0002
44	SLU 102	0.07654	-0.00009	0.00065	0.0002	-0.0219	-0.0002
44	SLU 103	0.00553	-0.00009	-0.00985	0.0001	-0.0066	-0.0002
44	SLU 104	0.05879	-0.00009	-0.00197	0.0002	-0.0181	-0.0003
44	SLU 105	0.07704	-0.00009	0.00041	0.0002	-0.0222	-0.0002
44	SLU 106	0.07704	-0.00009	0.00041	0.0002	-0.0222	-0.0002
44	SLU 107	0.00603	-0.00009	-0.01008	0.0001	-0.007	-0.0002
44	SLU 108	0.05929	-0.00009	-0.00221	0.0002	-0.0184	-0.0003
44	SLU 109	0.00653	-0.0001	-0.01032	0.0001	-0.0073	-0.0002
44	SLU 110	0.05979	-0.0001	-0.00244	0.0002	-0.0188	-0.0002
44	SLU 111	0.00653	-0.0001	-0.01032	0.0001	-0.0073	-0.0002
44	SLU 112	0.05979	-0.0001	-0.00244	0.0002	-0.0188	-0.0002
44	SLU 113	0.07653	-0.00011	0.00013	0.0001	-0.0223	-0.0001
44	SLU 114	0.07653	-0.00011	0.00013	0.0001	-0.0223	-0.0001
44	SLU 115	0.00551	-0.00011	-0.01036	0.0001	-0.007	-0.0001
44	SLU 116	0.05877	-0.00011	-0.00249	0.0001	-0.0185	-0.0001
44	SLU 117	0.07702	-0.00011	-0.0001	0.0001	-0.0226	-0.0001
44	SLU 118	0.07702	-0.00011	-0.0001	0.0001	-0.0226	-0.0001
44	SLU 119	0.00601	-0.00011	-0.0106	0.0001	-0.0074	-0.0001
44	SLU 120	0.05927	-0.00011	-0.00273	0.0001	-0.0188	-0.0001
44	SLU 121	0.00651	-0.00011	-0.01083	0.0001	-0.0078	-0.0001
44	SLU 122	0.05977	-0.00011	-0.00296	0.0001	-0.0192	-0.0001
44	SLU 123	0.00651	-0.00011	-0.01083	0.0001	-0.0078	-0.0001
44	SLU 124	0.05977	-0.00011	-0.00296	0.0001	-0.0192	-0.0001
44	SLU 125	0.00549	-0.00013	-0.01114	0	-0.0077	0.0002
44	SLU 126	0.05875	-0.00014	-0.00327	0	-0.0191	0.0001
44	SLU 127	0.00549	-0.00013	-0.01114	0	-0.0077	0.0001
44	SLU 128	0.05875	-0.00014	-0.00327	0	-0.0191	0.0001
44	SLU 129	0.00599	-0.00014	-0.01137	0	-0.008	0.0001
44	SLU 130	0.05924	-0.00014	-0.0035	0	-0.0194	0.0001
44	SLU 131	0.00599	-0.00014	-0.01137	0	-0.008	0.0001
44	SLU 132	0.05924	-0.00014	-0.0035	0	-0.0194	0.0001
44	SLE RA 1	0.00426	-0.00007	-0.00757	0.0001	-0.0051	-0.0001
44	SLE RA 2	0.0516	-0.00007	-0.00058	0.0001	-0.0153	-0.0002
44	SLE RA 3	0.0516	-0.00007	-0.00058	0.0001	-0.0153	-0.0002
44	SLE RA 4	0.00426	-0.00007	-0.00757	0.0001	-0.0051	-0.0002
44	SLE RA 5	0.03976	-0.00007	-0.00233	0.0001	-0.0127	-0.0002
44	SLE RA 6	0.05193	-0.00007	-0.00073	0.0001	-0.0155	-0.0002
44	SLE RA 7	0.05193	-0.00007	-0.00073	0.0001	-0.0155	-0.0002
44	SLE RA 8	0.00459	-0.00007	-0.00773	0.0001	-0.0053	-0.0002
44	SLE RA 9	0.04009	-0.00007	-0.00248	0.0001	-0.013	-0.0002
44	SLE RA 10	0.00492	-0.00007	-0.00789	0.0001	-0.0056	-0.0002
44	SLE RA 11	0.04043	-0.00007	-0.00264	0.0001	-0.0132	-0.0002
44	SLE RA 12	0.00492	-0.00007	-0.00789	0.0001	-0.0056	-0.0002
44	SLE RA 13	0.04043	-0.00007	-0.00264	0.0001	-0.0132	-0.0002
44	SLE RA 14	0.05158	-0.00008	-0.00092	0.0001	-0.0155	-0.0001
44	SLE RA 15	0.05158	-0.00008	-0.00092	0.0001	-0.0155	-0.0001
44	SLE RA 16	0.00424	-0.00008	-0.00792	0.0001	-0.0054	-0.0001
44	SLE RA 17	0.03975	-0.00008	-0.00267	0.0001	-0.013	-0.0001
44	SLE RA 18	0.05192	-0.00008	-0.00108	0.0001	-0.0158	-0.0001
44	SLE RA 19	0.05192	-0.00008	-0.00108	0.0001	-0.0158	-0.0001
44	SLE RA 20	0.00458	-0.00008	-0.00808	0.0001	-0.0056	-0.0001
44	SLE RA 21	0.04008	-0.00008	-0.00283	0.0001	-0.0132	-0.0001
44	SLE RA 22	0.00491	-0.00008	-0.00823	0.0001	-0.0059	-0.0001
44	SLE RA 23	0.04041	-0.00009	-0.00298	0.0001	-0.0135	-0.0001
44	SLE RA 24	0.00491	-0.00008	-0.00823	0.0001	-0.0059	-0.0001
44	SLE RA 25	0.04041	-0.00009	-0.00298	0.0001	-0.0135	-0.0001
44	SLE RA 26	0.00423	-0.0001	-0.00844	0	-0.0058	0.0001
44	SLE RA 27	0.03973	-0.0001	-0.00319	0	-0.0134	0.0001

Nodo	Cont.	Spostamento			Rotazione		
Ind.	N.br.	ux	uy	uz	rx	ry	rz
44	SLE RA 28	0.00423	-0.0001	-0.00844	0	-0.0058	0.0001
44	SLE RA 29	0.03973	-0.0001	-0.00319	0	-0.0134	0.0001
44	SLE RA 30	0.00456	-0.0001	-0.00859	0	-0.006	0.0001
44	SLE RA 31	0.04006	-0.0001	-0.00335	0	-0.0136	0.0001
44	SLE RA 32	0.00456	-0.0001	-0.00859	0	-0.006	0.0001
44	SLE RA 33	0.04006	-0.0001	-0.00335	0	-0.0136	0.0001
44	SLE FR 1	0.00426	-0.00007	-0.00757	0.0001	-0.0051	-0.0001
44	SLE FR 2	0.03976	-0.00007	-0.00233	0.0001	-0.0127	-0.0002
44	SLE FR 3	0.00426	-0.00007	-0.00757	0.0001	-0.0051	-0.0002
44	SLE FR 4	0.00439	-0.00007	-0.00764	0.0001	-0.0052	-0.0001
44	SLE FR 5	0.00424	-0.00008	-0.00792	0.0001	-0.0054	-0.0001
44	SLE QP 1	0.00426	-0.00007	-0.00757	0.0001	-0.0051	-0.0001
44	SLO 1	-0.00575	-0.0003	-0.01193	-0.1094	-0.0086	0.262
44	SLO 2	-0.00575	-0.0003	-0.01193	-0.1094	-0.0086	0.262
44	SLO 3	-0.00575	0.00016	-0.01193	0.1096	-0.0086	-0.2623
44	SLO 4	-0.00575	0.00016	-0.01193	0.1096	-0.0086	-0.2623
44	SLO 5	0.00126	-0.00085	-0.00888	-0.365	-0.0061	0.8738
44	SLO 6	0.00126	-0.00085	-0.00888	-0.365	-0.0061	0.8738
44	SLO 7	0.00126	0.00071	-0.00888	0.3652	-0.0061	-0.8741
44	SLO 8	0.00126	0.00071	-0.00888	0.3652	-0.0061	-0.8741
44	SLO 9	0.00726	-0.00085	-0.00627	-0.365	-0.0041	0.8738
44	SLO 10	0.00726	-0.00085	-0.00627	-0.365	-0.0041	0.8738
44	SLO 11	0.00726	0.00071	-0.00627	0.3652	-0.0041	-0.8741
44	SLO 12	0.00726	0.00071	-0.00627	0.3652	-0.0041	-0.8741
44	SLO 13	0.01426	-0.0003	-0.00322	-0.1094	-0.0017	0.262
44	SLO 14	0.01426	-0.0003	-0.00322	-0.1094	-0.0017	0.262
44	SLO 15	0.01426	0.00017	-0.00322	0.1096	-0.0017	-0.2623
44	SLO 16	0.01426	0.00017	-0.00322	0.1096	-0.0017	-0.2623
44	SLD 1	-0.00397	-0.00029	-0.01116	-0.1011	-0.0079	0.2421
44	SLD 2	-0.00397	-0.00029	-0.01116	-0.1011	-0.0079	0.2421
44	SLD 3	-0.00397	0.00015	-0.01116	0.1013	-0.0079	-0.2424
44	SLD 4	-0.00397	0.00015	-0.01116	0.1013	-0.0079	-0.2424
44	SLD 5	0.00179	-0.00079	-0.00865	-0.3373	-0.006	0.8073
44	SLD 6	0.00179	-0.00079	-0.00865	-0.3373	-0.006	0.8073
44	SLD 7	0.00179	0.00065	-0.00865	0.3375	-0.006	-0.8076
44	SLD 8	0.00179	0.00065	-0.00865	0.3375	-0.006	-0.8076
44	SLD 9	0.00672	-0.00079	-0.0065	-0.3373	-0.0043	0.8073
44	SLD 10	0.00672	-0.00079	-0.0065	-0.3373	-0.0043	0.8073
44	SLD 11	0.00672	0.00065	-0.0065	0.3375	-0.0043	-0.8076
44	SLD 12	0.00672	0.00065	-0.0065	0.3375	-0.0043	-0.8076
44	SLD 13	0.01248	-0.00029	-0.00399	-0.1011	-0.0023	0.2421
44	SLD 14	0.01248	-0.00029	-0.00399	-0.1011	-0.0023	0.2421
44	SLD 15	0.01248	0.00015	-0.00399	0.1013	-0.0023	-0.2424
44	SLD 16	0.01248	0.00015	-0.00399	0.1013	-0.0023	-0.2424
44	SLV 1	-0.01346	-0.00064	-0.01529	-0.2668	-0.0112	0.6388
44	SLV 2	-0.01346	-0.00064	-0.01529	-0.2668	-0.0112	0.6388
44	SLV 3	-0.01346	0.0005	-0.01529	0.267	-0.0112	-0.6391
44	SLV 4	-0.01346	0.0005	-0.01529	0.267	-0.0112	-0.6391
44	SLV 5	-0.00106	-0.00197	-0.00989	-0.8897	-0.0069	2.1296
44	SLV 6	-0.00106	-0.00197	-0.00989	-0.8897	-0.0069	2.1296
44	SLV 7	-0.00106	0.00183	-0.00989	0.8899	-0.0069	-2.1299
44	SLV 8	-0.00106	0.00183	-0.00989	0.8899	-0.0069	-2.1299
44	SLV 9	0.00957	-0.00197	-0.00526	-0.8897	-0.0033	2.1296
44	SLV 10	0.00957	-0.00197	-0.00526	-0.8897	-0.0033	2.1296
44	SLV 11	0.00957	0.00184	-0.00526	0.8899	-0.0033	-2.1299
44	SLV 12	0.00957	0.00184	-0.00526	0.8899	-0.0033	-2.1299
44	SLV 13	0.02198	-0.00064	0.00014	-0.2668	0.001	0.6388
44	SLV 14	0.02198	-0.00064	0.00014	-0.2668	0.001	0.6388
44	SLV 15	0.02198	0.0005	0.00014	0.267	0.001	-0.6391
44	SLV 16	0.02198	0.0005	0.00014	0.267	0.001	-0.6391
45	SLU 1	-0.00426	0	-0.00757	0	0.0051	0
45	SLU 2	-0.09621	0	0.00396	0	0.0262	0
45	SLU 3	-0.09621	0	0.00396	0	0.0262	0
45	SLU 4	-0.00426	0	-0.00757	0	0.0051	0
45	SLU 5	-0.07322	0	0.00108	0	0.0209	0.0001
45	SLU 6	-0.09708	0	0.00385	0	0.0265	0
45	SLU 7	-0.09708	0	0.00385	0	0.0265	0
45	SLU 8	-0.00512	0	-0.00769	0	0.0054	0
45	SLU 9	-0.07409	0	0.00097	0	0.0212	0.0001
45	SLU 10	-0.00598	0	-0.0078	0	0.0057	0
45	SLU 11	-0.07495	0	0.00085	0	0.0215	0
45	SLU 12	-0.00598	0	-0.0078	0	0.0057	0
45	SLU 13	-0.07495	0	0.00085	0	0.0215	0
45	SLU 14	-0.09645	-0.00001	0.00382	0	0.0263	-0.0001
45	SLU 15	-0.09645	-0.00001	0.00382	0	0.0263	-0.0001
45	SLU 16	-0.00449	-0.00001	-0.00771	0	0.0052	-0.0001
45	SLU 17	-0.07346	-0.00001	0.00094	0	0.021	-0.0001
45	SLU 18	-0.09731	-0.00001	0.00371	0	0.0266	-0.0001
45	SLU 19	-0.09731	-0.00001	0.00371	0	0.0266	-0.0001
45	SLU 20	-0.00535	-0.00001	-0.00782	0	0.0055	-0.0001
45	SLU 21	-0.07432	-0.00001	0.00083	0	0.0213	-0.0001
45	SLU 22	-0.00621	-0.00001	-0.00793	-0.0001	0.0058	-0.0002
45	SLU 23	-0.07518	-0.00001	0.00072	0	0.0216	-0.0001
45	SLU 24	-0.00621	-0.00001	-0.00793	-0.0001	0.0058	-0.0001
45	SLU 25	-0.07518	-0.00001	0.00072	0	0.0216	-0.0001
45	SLU 26	-0.00484	-0.00002	-0.00791	-0.0002	0.0053	-0.0004
45	SLU 27	-0.07381	-0.00002	0.00074	-0.0001	0.0211	-0.0004
45	SLU 28	-0.00484	-0.00002	-0.00791	-0.0001	0.0053	-0.0004
45	SLU 29	-0.07381	-0.00002	0.00074	-0.0001	0.0211	-0.0004
45	SLU 30	-0.0057	-0.00002	-0.00803	-0.0002	0.0056	-0.0004
45	SLU 31	-0.07467	-0.00002	0.00063	-0.0001	0.0214	-0.0004
45	SLU 32	-0.0057	-0.00002	-0.00803	-0.0001	0.0056	-0.0004
45	SLU 33	-0.07467	-0.00002	0.00063	-0.0001	0.0214	-0.0004
45	SLU 34	-0.00426	0	-0.00757	0	0.0051	0
45	SLU 35	-0.09621	0	0.00396	0	0.0262	0

Nodo	Cont.	Spostamento			Rotazione		
Ind.	N.br.	ux	uy	uz	rx	ry	rz
45	SLU 36	-0.09621	0	0.00396	0	0.0262	0
45	SLU 37	-0.00426	0	-0.00757	0	0.0051	0
45	SLU 38	-0.07322	0	0.00108	0	0.0209	0.0001
45	SLU 39	-0.09708	0	0.00385	0	0.0265	0
45	SLU 40	-0.09708	0	0.00385	0	0.0265	0
45	SLU 41	-0.00512	0	-0.00769	0	0.0054	0
45	SLU 42	-0.07409	0	0.00097	0	0.0212	0.0001
45	SLU 43	-0.00598	0	-0.0078	0	0.0057	0
45	SLU 44	-0.07495	0	0.00085	0	0.0215	0
45	SLU 45	-0.00598	0	-0.0078	0	0.0057	0
45	SLU 46	-0.07495	0	0.00085	0	0.0215	0
45	SLU 47	-0.09645	-0.00001	0.00382	0	0.0263	-0.0001
45	SLU 48	-0.09645	-0.00001	0.00382	0	0.0263	-0.0001
45	SLU 49	-0.00449	-0.00001	-0.00771	0	0.0052	-0.0001
45	SLU 50	-0.07346	-0.00001	0.00094	0	0.021	-0.0001
45	SLU 51	-0.09731	-0.00001	0.00371	0	0.0266	-0.0001
45	SLU 52	-0.09731	-0.00001	0.00371	0	0.0266	-0.0001
45	SLU 53	-0.00535	-0.00001	-0.00782	0	0.0055	-0.0001
45	SLU 54	-0.07432	-0.00001	0.00083	0	0.0213	-0.0001
45	SLU 55	-0.00621	-0.00001	-0.00793	-0.0001	0.0058	-0.0002
45	SLU 56	-0.07518	-0.00001	0.00072	0	0.0216	-0.0001
45	SLU 57	-0.00621	-0.00001	-0.00793	-0.0001	0.0058	-0.0001
45	SLU 58	-0.07518	-0.00001	0.00072	0	0.0216	-0.0001
45	SLU 59	-0.00484	-0.00002	-0.00791	-0.0002	0.0053	-0.0004
45	SLU 60	-0.07381	-0.00002	0.00074	-0.0001	0.0211	-0.0004
45	SLU 61	-0.00484	-0.00002	-0.00791	-0.0001	0.0053	-0.0004
45	SLU 62	-0.07381	-0.00002	0.00074	-0.0001	0.0211	-0.0004
45	SLU 63	-0.0057	-0.00002	-0.00803	-0.0002	0.0056	-0.0004
45	SLU 64	-0.07467	-0.00002	0.00063	-0.0001	0.0214	-0.0004
45	SLU 65	-0.0057	-0.00002	-0.00803	-0.0001	0.0056	-0.0004
45	SLU 66	-0.07467	-0.00002	0.00063	-0.0001	0.0214	-0.0004
45	SLU 67	-0.00553	0	-0.00985	0	0.0066	0
45	SLU 68	-0.09749	0	0.00169	0	0.0277	0
45	SLU 69	-0.09749	0	0.00169	0	0.0277	0
45	SLU 70	-0.00553	0	-0.00985	0	0.0066	0
45	SLU 71	-0.0745	0	-0.00119	0	0.0225	0.0001
45	SLU 72	-0.09835	0	0.00158	0	0.028	0
45	SLU 73	-0.09835	0	0.00158	0	0.028	0
45	SLU 74	-0.0064	0	-0.00996	0	0.0069	0
45	SLU 75	-0.07536	0	-0.00131	0	0.0227	0.0001
45	SLU 76	-0.00726	0	-0.01007	0	0.0072	0
45	SLU 77	-0.07623	0	-0.00142	0	0.023	0
45	SLU 78	-0.00726	0	-0.01007	0	0.0072	0
45	SLU 79	-0.07623	0	-0.00142	0	0.023	0
45	SLU 80	-0.09772	-0.00001	0.00155	0	0.0278	-0.0001
45	SLU 81	-0.09772	-0.00001	0.00155	0	0.0278	-0.0001
45	SLU 82	-0.00577	-0.00001	-0.00998	0	0.0067	-0.0001
45	SLU 83	-0.07473	-0.00001	-0.00133	0	0.0225	-0.0001
45	SLU 84	-0.09859	-0.00001	0.00144	0	0.0281	-0.0001
45	SLU 85	-0.09859	-0.00001	0.00144	0	0.0281	-0.0001
45	SLU 86	-0.00663	-0.00001	-0.01009	0	0.007	-0.0001
45	SLU 87	-0.0756	-0.00001	-0.00144	0	0.0228	-0.0001
45	SLU 88	-0.00749	-0.00001	-0.01021	-0.0001	0.0073	-0.0002
45	SLU 89	-0.07646	-0.00001	-0.00155	0	0.0231	-0.0001
45	SLU 90	-0.00749	-0.00001	-0.01021	-0.0001	0.0073	-0.0001
45	SLU 91	-0.07646	-0.00001	-0.00155	0	0.0231	-0.0001
45	SLU 92	-0.00611	-0.00002	-0.01019	-0.0002	0.0069	-0.0004
45	SLU 93	-0.07508	-0.00002	-0.00154	-0.0001	0.0227	-0.0004
45	SLU 94	-0.00611	-0.00002	-0.01019	-0.0001	0.0069	-0.0004
45	SLU 95	-0.07508	-0.00002	-0.00154	-0.0001	0.0227	-0.0004
45	SLU 96	-0.00698	-0.00002	-0.0103	-0.0002	0.0072	-0.0004
45	SLU 97	-0.07595	-0.00002	-0.00165	-0.0001	0.023	-0.0004
45	SLU 98	-0.00698	-0.00002	-0.0103	-0.0001	0.0072	-0.0004
45	SLU 99	-0.07595	-0.00002	-0.00165	-0.0001	0.023	-0.0004
45	SLU 100	-0.00553	0	-0.00985	0	0.0066	0
45	SLU 101	-0.09749	0	0.00169	0	0.0277	0
45	SLU 102	-0.09749	0	0.00169	0	0.0277	0
45	SLU 103	-0.00553	0	-0.00985	0	0.0066	0
45	SLU 104	-0.0745	0	-0.00119	0	0.0225	0.0001
45	SLU 105	-0.09835	0	0.00158	0	0.028	0
45	SLU 106	-0.09835	0	0.00158	0	0.028	0
45	SLU 107	-0.0064	0	-0.00996	0	0.0069	0
45	SLU 108	-0.07536	0	-0.00131	0	0.0227	0.0001
45	SLU 109	-0.00726	0	-0.01007	0	0.0072	0
45	SLU 110	-0.07623	0	-0.00142	0	0.023	0
45	SLU 111	-0.00726	0	-0.01007	0	0.0072	0
45	SLU 112	-0.07623	0	-0.00142	0	0.023	0
45	SLU 113	-0.09772	-0.00001	0.00155	0	0.0278	-0.0001
45	SLU 114	-0.09772	-0.00001	0.00155	0	0.0278	-0.0001
45	SLU 115	-0.00577	-0.00001	-0.00998	0	0.0067	-0.0001
45	SLU 116	-0.07473	-0.00001	-0.00133	0	0.0225	-0.0001
45	SLU 117	-0.09859	-0.00001	0.00144	0	0.0281	-0.0001
45	SLU 118	-0.09859	-0.00001	0.00144	0	0.0281	-0.0001
45	SLU 119	-0.00663	-0.00001	-0.01009	0	0.007	-0.0001
45	SLU 120	-0.0756	-0.00001	-0.00144	0	0.0228	-0.0001
45	SLU 121	-0.00749	-0.00001	-0.01021	-0.0001	0.0073	-0.0002
45	SLU 122	-0.07646	-0.00001	-0.00155	0	0.0231	-0.0001
45	SLU 123	-0.00749	-0.00001	-0.01021	-0.0001	0.0073	-0.0001
45	SLU 124	-0.07646	-0.00001	-0.00155	0	0.0231	-0.0001
45	SLU 125	-0.00611	-0.00002	-0.01019	-0.0002	0.0069	-0.0004
45	SLU 126	-0.07508	-0.00002	-0.00154	-0.0001	0.0227	-0.0004
45	SLU 127	-0.00611	-0.00002	-0.01019	-0.0001	0.0069	-0.0004
45	SLU 128	-0.07508	-0.00002	-0.00154	-0.0001	0.0227	-0.0004
45	SLU 129	-0.00698	-0.00002	-0.0103	-0.0002	0.0072	-0.0004
45	SLU 130	-0.07595	-0.00002	-0.00165	-0.0001	0.023	-0.0004

Nodo	Cont.	Spostamento			Rotazione		
Ind.	N.br.	ux	uy	uz	rx	ry	rz
45	SLU 131	-0.00698	-0.00002	-0.0103	-0.0001	0.0072	-0.0004
45	SLU 132	-0.07595	-0.00002	-0.00165	-0.0001	0.023	-0.0004
45	SLE RA 1	-0.00426	0	-0.00757	0	0.0051	0
45	SLE RA 2	-0.06556	0	0.00012	0	0.0192	0
45	SLE RA 3	-0.06556	0	0.00012	0	0.0192	0
45	SLE RA 4	-0.00426	0	-0.00757	0	0.0051	0
45	SLE RA 5	-0.05024	0	-0.00181	0	0.0156	0
45	SLE RA 6	-0.06614	0	0.00004	0	0.0194	0
45	SLE RA 7	-0.06614	0	0.00004	0	0.0194	0
45	SLE RA 8	-0.00483	0	-0.00765	0	0.0053	0
45	SLE RA 9	-0.05081	0	-0.00188	0	0.0158	0
45	SLE RA 10	-0.00541	0	-0.00772	0	0.0055	0
45	SLE RA 11	-0.05139	0	-0.00196	0	0.016	0
45	SLE RA 12	-0.00541	0	-0.00772	0	0.0055	0
45	SLE RA 13	-0.05139	0	-0.00196	0	0.016	0
45	SLE RA 14	-0.06572	0	0.00003	0	0.0192	-0.0001
45	SLE RA 15	-0.06572	0	0.00003	0	0.0192	-0.0001
45	SLE RA 16	-0.00441	0	-0.00766	0	0.0052	-0.0001
45	SLE RA 17	-0.05039	0	-0.0019	0	0.0157	-0.0001
45	SLE RA 18	-0.06629	0	-0.00005	0	0.0194	-0.0001
45	SLE RA 19	-0.06629	0	-0.00005	0	0.0194	-0.0001
45	SLE RA 20	-0.00499	0	-0.00774	0	0.0054	-0.0001
45	SLE RA 21	-0.05097	0	-0.00197	0	0.0159	-0.0001
45	SLE RA 22	-0.00556	0	-0.00781	0	0.0056	-0.0001
45	SLE RA 23	-0.05154	0	-0.00205	0	0.0161	-0.0001
45	SLE RA 24	-0.00556	0	-0.00781	0	0.0056	-0.0001
45	SLE RA 25	-0.05154	0	-0.00205	0	0.0161	-0.0001
45	SLE RA 26	-0.00464	-0.00001	-0.0078	-0.0001	0.0053	-0.0003
45	SLE RA 27	-0.05062	-0.00001	-0.00203	-0.0001	0.0158	-0.0003
45	SLE RA 28	-0.00464	-0.00001	-0.0078	-0.0001	0.0053	-0.0003
45	SLE RA 29	-0.05062	-0.00001	-0.00203	-0.0001	0.0158	-0.0002
45	SLE RA 30	-0.00522	-0.00001	-0.00788	-0.0001	0.0054	-0.0003
45	SLE RA 31	-0.0512	-0.00001	-0.00211	-0.0001	0.016	-0.0003
45	SLE RA 32	-0.00522	-0.00001	-0.00788	-0.0001	0.0054	-0.0003
45	SLE RA 33	-0.0512	-0.00001	-0.00211	-0.0001	0.016	-0.0002
45	SLE FR 1	-0.00426	0	-0.00757	0	0.0051	0
45	SLE FR 2	-0.05024	0	-0.00181	0	0.0156	0
45	SLE FR 3	-0.00426	0	-0.00757	0	0.0051	0
45	SLE FR 4	-0.00449	0	-0.0076	0	0.0052	0
45	SLE FR 5	-0.00441	0	-0.00766	0	0.0052	-0.0001
45	SLE QP 1	-0.00426	0	-0.00757	0	0.0051	0
45	SLO 1	-0.01426	-0.00024	-0.00322	-0.1095	0.0017	-0.2622
45	SLO 2	-0.01426	-0.00024	-0.00322	-0.1095	0.0017	-0.2622
45	SLO 3	-0.01426	0.00024	-0.00322	0.1095	0.0017	0.2622
45	SLO 4	-0.01426	0.00024	-0.00322	0.1095	0.0017	0.2622
45	SLO 5	-0.00726	-0.00079	-0.00627	-0.3651	0.0041	-0.8739
45	SLO 6	-0.00726	-0.00079	-0.00627	-0.3651	0.0041	-0.8739
45	SLO 7	-0.00726	0.00079	-0.00627	0.3651	0.0041	0.8739
45	SLO 8	-0.00726	0.00079	-0.00627	0.3651	0.0041	0.8739
45	SLO 9	-0.00126	-0.00079	-0.00888	-0.3651	0.0061	-0.8739
45	SLO 10	-0.00126	-0.00079	-0.00888	-0.3651	0.0061	-0.8739
45	SLO 11	-0.00126	0.00079	-0.00888	0.3651	0.0061	0.8739
45	SLO 12	-0.00126	0.00079	-0.00888	0.3651	0.0061	0.8739
45	SLO 13	0.00575	-0.00024	-0.01193	-0.1095	0.0086	-0.2622
45	SLO 14	0.00575	-0.00024	-0.01193	-0.1095	0.0086	-0.2622
45	SLO 15	0.00575	0.00024	-0.01193	0.1095	0.0086	0.2622
45	SLO 16	0.00575	0.00024	-0.01193	0.1095	0.0086	0.2622
45	SLD 1	-0.01248	-0.00022	-0.00399	-0.1012	0.0023	-0.2422
45	SLD 2	-0.01248	-0.00022	-0.00399	-0.1012	0.0023	-0.2422
45	SLD 3	-0.01248	0.00022	-0.00399	0.1012	0.0023	0.2422
45	SLD 4	-0.01248	0.00022	-0.00399	0.1012	0.0023	0.2422
45	SLD 5	-0.00672	-0.00073	-0.0065	-0.3374	0.0043	-0.8075
45	SLD 6	-0.00672	-0.00073	-0.0065	-0.3374	0.0043	-0.8075
45	SLD 7	-0.00672	0.00073	-0.0065	0.3374	0.0043	0.8075
45	SLD 8	-0.00672	0.00073	-0.0065	0.3374	0.0043	0.8075
45	SLD 9	-0.00179	-0.00073	-0.00865	-0.3374	0.006	-0.8075
45	SLD 10	-0.00179	-0.00073	-0.00865	-0.3374	0.006	-0.8075
45	SLD 11	-0.00179	0.00073	-0.00865	0.3374	0.006	0.8075
45	SLD 12	-0.00179	0.00073	-0.00865	0.3374	0.006	0.8075
45	SLD 13	0.00397	-0.00022	-0.01116	-0.1012	0.0079	-0.2422
45	SLD 14	0.00397	-0.00022	-0.01116	-0.1012	0.0079	-0.2422
45	SLD 15	0.00397	0.00022	-0.01116	0.1012	0.0079	0.2422
45	SLD 16	0.00397	0.00022	-0.01116	0.1012	0.0079	0.2422
45	SLV 1	-0.02198	-0.00058	0.00014	-0.2669	-0.001	-0.6389
45	SLV 2	-0.02198	-0.00058	0.00014	-0.2669	-0.001	-0.6389
45	SLV 3	-0.02198	0.00058	0.00014	0.2669	-0.001	0.6389
45	SLV 4	-0.02198	0.00058	0.00014	0.2669	-0.001	0.6389
45	SLV 5	-0.00957	-0.00193	-0.00526	-0.8898	0.0033	-2.1297
45	SLV 6	-0.00957	-0.00193	-0.00526	-0.8898	0.0033	-2.1297
45	SLV 7	-0.00957	0.00193	-0.00526	0.8898	0.0033	2.1297
45	SLV 8	-0.00957	0.00193	-0.00526	0.8898	0.0033	2.1297
45	SLV 9	0.00106	-0.00193	-0.00989	-0.8898	0.0069	-2.1297
45	SLV 10	0.00106	-0.00193	-0.00989	-0.8898	0.0069	-2.1297
45	SLV 11	0.00106	0.00193	-0.00989	0.8898	0.0069	2.1297
45	SLV 12	0.00106	0.00193	-0.00989	0.8898	0.0069	2.1297
45	SLV 13	0.01346	-0.00058	-0.01529	-0.2669	0.0112	-0.6389
45	SLV 14	0.01346	-0.00058	-0.01529	-0.2669	0.0112	-0.6389
45	SLV 15	0.01346	0.00058	-0.01529	0.2669	0.0112	0.6389
45	SLV 16	0.01346	0.00058	-0.01529	0.2669	0.0112	0.6389
46	SLU 1	-0.00139	0	-0.02369	0	0.0081	0
46	SLU 2	-0.06119	0.00001	-0.13207	0	0.0865	0
46	SLU 3	-0.06119	0.00002	-0.13207	0	0.0865	0
46	SLU 4	-0.00139	0	-0.02369	0	0.0081	0
46	SLU 5	-0.04624	0.00002	-0.10498	0	0.0669	0
46	SLU 6	-0.06174	0.00001	-0.13351	0	0.0872	0

Nodo	Cont.	Spostamento			Rotazione		
Ind.	N.br.	ux	uy	uz	rx	ry	rz
46	SLU 7	-0.06174	0.00002	-0.13351	0	0.0872	0
46	SLU 8	-0.00194	0	-0.02513	0	0.0089	0
46	SLU 9	-0.04679	0.00002	-0.10642	0	0.0676	0
46	SLU 10	-0.00248	0	-0.02657	0	0.0096	0
46	SLU 11	-0.04733	0.00001	-0.10785	0	0.0684	0
46	SLU 12	-0.00248	0	-0.02657	0	0.0096	0
46	SLU 13	-0.04733	0.00001	-0.10785	0	0.0684	0
46	SLU 14	-0.06138	-0.00001	-0.13259	0.0001	0.0866	0
46	SLU 15	-0.06138	-0.00001	-0.13259	0.0001	0.0866	0
46	SLU 16	-0.00158	-0.00002	-0.02421	0.0001	0.0083	0
46	SLU 17	-0.04643	-0.00001	-0.1055	0.0001	0.067	0
46	SLU 18	-0.06192	-0.00001	-0.13403	0.0001	0.0874	0
46	SLU 19	-0.06192	-0.00001	-0.13403	0.0001	0.0874	0
46	SLU 20	-0.00212	-0.00002	-0.02565	0.0001	0.009	0
46	SLU 21	-0.04697	-0.00001	-0.10694	0.0001	0.0678	0
46	SLU 22	-0.00266	-0.00002	-0.02709	0.0001	0.0098	0
46	SLU 23	-0.04751	-0.00001	-0.10837	0.0001	0.0685	0
46	SLU 24	-0.00266	-0.00002	-0.02709	0.0001	0.0098	0
46	SLU 25	-0.04751	-0.00001	-0.10837	0.0001	0.0685	0
46	SLU 26	-0.00185	-0.00006	-0.02499	0.0002	0.0085	0
46	SLU 27	-0.0467	-0.00005	-0.10628	0.0002	0.0673	0
46	SLU 28	-0.00185	-0.00006	-0.02499	0.0002	0.0085	0
46	SLU 29	-0.0467	-0.00004	-0.10628	0.0002	0.0673	0
46	SLU 30	-0.0024	-0.00006	-0.02643	0.0002	0.0092	0
46	SLU 31	-0.04724	-0.00005	-0.10772	0.0002	0.068	0
46	SLU 32	-0.0024	-0.00006	-0.02643	0.0002	0.0092	0
46	SLU 33	-0.04724	-0.00004	-0.10772	0.0002	0.068	0
46	SLU 34	-0.00139	0	-0.02369	0	0.0081	0
46	SLU 35	-0.06119	0.00001	-0.13207	0	0.0865	0
46	SLU 36	-0.06119	0.00002	-0.13207	0	0.0865	0
46	SLU 37	-0.00139	0	-0.02369	0	0.0081	0
46	SLU 38	-0.04624	0.00002	-0.10498	0	0.0669	0
46	SLU 39	-0.06174	0.00001	-0.13351	0	0.0872	0
46	SLU 40	-0.06174	0.00002	-0.13351	0	0.0872	0
46	SLU 41	-0.00194	0	-0.02513	0	0.0089	0
46	SLU 42	-0.04679	0.00002	-0.10642	0	0.0676	0
46	SLU 43	-0.00248	0	-0.02657	0	0.0096	0
46	SLU 44	-0.04733	0.00001	-0.10785	0	0.0684	0
46	SLU 45	-0.00248	0	-0.02657	0	0.0096	0
46	SLU 46	-0.04733	0.00001	-0.10785	0	0.0684	0
46	SLU 47	-0.06138	-0.00001	-0.13259	0.0001	0.0866	0
46	SLU 48	-0.06138	-0.00001	-0.13259	0.0001	0.0866	0
46	SLU 49	-0.00158	-0.00002	-0.02421	0.0001	0.0083	0
46	SLU 50	-0.04643	-0.00001	-0.1055	0.0001	0.067	0
46	SLU 51	-0.06192	-0.00001	-0.13403	0.0001	0.0874	0
46	SLU 52	-0.06192	-0.00001	-0.13403	0.0001	0.0874	0
46	SLU 53	-0.00212	-0.00002	-0.02565	0.0001	0.009	0
46	SLU 54	-0.04697	-0.00001	-0.10694	0.0001	0.0678	0
46	SLU 55	-0.00266	-0.00002	-0.02709	0.0001	0.0098	0
46	SLU 56	-0.04751	-0.00001	-0.10837	0.0001	0.0685	0
46	SLU 57	-0.00266	-0.00002	-0.02709	0.0001	0.0098	0
46	SLU 58	-0.04751	-0.00001	-0.10837	0.0001	0.0685	0
46	SLU 59	-0.00185	-0.00006	-0.02499	0.0002	0.0085	0
46	SLU 60	-0.0467	-0.00005	-0.10628	0.0002	0.0673	0
46	SLU 61	-0.00185	-0.00006	-0.02499	0.0002	0.0085	0
46	SLU 62	-0.0467	-0.00004	-0.10628	0.0002	0.0673	0
46	SLU 63	-0.0024	-0.00006	-0.02643	0.0002	0.0092	0
46	SLU 64	-0.04724	-0.00005	-0.10772	0.0002	0.068	0
46	SLU 65	-0.0024	-0.00006	-0.02643	0.0002	0.0092	0
46	SLU 66	-0.04724	-0.00004	-0.10772	0.0002	0.068	0
46	SLU 67	-0.00181	0	-0.0308	0	0.0106	0
46	SLU 68	-0.06161	0.00001	-0.13918	0	0.0889	0
46	SLU 69	-0.06161	0.00002	-0.13918	0	0.0889	0
46	SLU 70	-0.00181	0	-0.0308	0	0.0106	0
46	SLU 71	-0.04666	0.00002	-0.11209	0	0.0693	0
46	SLU 72	-0.06215	0.00001	-0.14062	0	0.0896	0
46	SLU 73	-0.06215	0.00002	-0.14062	0	0.0896	0
46	SLU 74	-0.00236	0	-0.03224	0	0.0113	0
46	SLU 75	-0.0472	0.00002	-0.11352	0	0.0701	0
46	SLU 76	-0.0029	0	-0.03367	0	0.012	0
46	SLU 77	-0.04775	0.00001	-0.11496	0	0.0708	0
46	SLU 78	-0.0029	0	-0.03367	0	0.012	0
46	SLU 79	-0.04775	0.00001	-0.11496	0	0.0708	0
46	SLU 80	-0.06179	-0.00001	-0.1397	0.0001	0.0891	0
46	SLU 81	-0.06179	-0.00001	-0.1397	0.0001	0.0891	0
46	SLU 82	-0.002	-0.00002	-0.03132	0.0001	0.0107	0
46	SLU 83	-0.04684	-0.00001	-0.11261	0.0001	0.0695	0
46	SLU 84	-0.06234	-0.00001	-0.14114	0.0001	0.0898	0
46	SLU 85	-0.06234	-0.00001	-0.14114	0.0001	0.0898	0
46	SLU 86	-0.00254	-0.00002	-0.03276	0.0001	0.0115	0
46	SLU 87	-0.04739	-0.00001	-0.11404	0.0001	0.0702	0
46	SLU 88	-0.00308	-0.00002	-0.03419	0.0001	0.0122	0
46	SLU 89	-0.04793	-0.00001	-0.11548	0.0001	0.071	0
46	SLU 90	-0.00308	-0.00002	-0.03419	0.0001	0.0122	0
46	SLU 91	-0.04793	-0.00001	-0.11548	0.0001	0.071	0
46	SLU 92	-0.00227	-0.00006	-0.0321	0.0002	0.0109	0
46	SLU 93	-0.04712	-0.00005	-0.11339	0.0002	0.0697	0
46	SLU 94	-0.00227	-0.00006	-0.0321	0.0002	0.0109	0
46	SLU 95	-0.04712	-0.00004	-0.11339	0.0002	0.0697	0
46	SLU 96	-0.00281	-0.00006	-0.03354	0.0002	0.0117	0
46	SLU 97	-0.04766	-0.00005	-0.11482	0.0002	0.0704	0
46	SLU 98	-0.00281	-0.00006	-0.03354	0.0002	0.0117	0
46	SLU 99	-0.04766	-0.00004	-0.11482	0.0002	0.0704	0
46	SLU 100	-0.00181	0	-0.0308	0	0.0106	0
46	SLU 101	-0.06161	0.00001	-0.13918	0	0.0889	0

Nodo	Cont.	Spostamento			Rotazione		
Ind.	N.br.	ux	uy	uz	rx	ry	rz
46	SLU 102	-0.06161	0.00002	-0.13918	0	0.0889	0
46	SLU 103	-0.00181	0	-0.0308	0	0.0106	0
46	SLU 104	-0.04666	0.00002	-0.11209	0	0.0693	0
46	SLU 105	-0.06215	0.00001	-0.14062	0	0.0896	0
46	SLU 106	-0.06215	0.00002	-0.14062	0	0.0896	0
46	SLU 107	-0.00236	0	-0.03224	0	0.0113	0
46	SLU 108	-0.0472	0.00002	-0.11352	0	0.0701	0
46	SLU 109	-0.0029	0	-0.03367	0	0.012	0
46	SLU 110	-0.04775	0.00001	-0.11496	0	0.0708	0
46	SLU 111	-0.0029	0	-0.03367	0	0.012	0
46	SLU 112	-0.04775	0.00001	-0.11496	0	0.0708	0
46	SLU 113	-0.06179	-0.00001	-0.1397	0.0001	0.0891	0
46	SLU 114	-0.06179	-0.00001	-0.1397	0.0001	0.0891	0
46	SLU 115	-0.002	-0.00002	-0.03132	0.0001	0.0107	0
46	SLU 116	-0.04684	-0.00001	-0.11261	0.0001	0.0695	0
46	SLU 117	-0.06234	-0.00001	-0.14114	0.0001	0.0898	0
46	SLU 118	-0.06234	-0.00001	-0.14114	0.0001	0.0898	0
46	SLU 119	-0.00254	-0.00002	-0.03276	0.0001	0.0115	0
46	SLU 120	-0.04739	-0.00001	-0.11404	0.0001	0.0702	0
46	SLU 121	-0.00308	-0.00002	-0.03419	0.0001	0.0122	0
46	SLU 122	-0.04793	-0.00001	-0.11548	0.0001	0.071	0
46	SLU 123	-0.00308	-0.00002	-0.03419	0.0001	0.0122	0
46	SLU 124	-0.04793	-0.00001	-0.11548	0.0001	0.071	0
46	SLU 125	-0.00227	-0.00006	-0.0321	0.0002	0.0109	0
46	SLU 126	-0.04712	-0.00005	-0.11339	0.0002	0.0697	0
46	SLU 127	-0.00227	-0.00006	-0.0321	0.0002	0.0109	0
46	SLU 128	-0.04712	-0.00004	-0.11339	0.0002	0.0697	0
46	SLU 129	-0.00281	-0.00006	-0.03354	0.0002	0.0117	0
46	SLU 130	-0.04766	-0.00005	-0.11482	0.0002	0.0704	0
46	SLU 131	-0.00281	-0.00006	-0.03354	0.0002	0.0117	0
46	SLU 132	-0.04766	-0.00004	-0.11482	0.0002	0.0704	0
46	SLE RA 1	-0.00139	0	-0.02369	0	0.0081	0
46	SLE RA 2	-0.04126	0.00001	-0.09595	0	0.0604	0
46	SLE RA 3	-0.04126	0.00001	-0.09595	0	0.0604	0
46	SLE RA 4	-0.00139	0	-0.02369	0	0.0081	0
46	SLE RA 5	-0.03129	0.00001	-0.07788	0	0.0473	0
46	SLE RA 6	-0.04162	0.00001	-0.09691	0	0.0608	0
46	SLE RA 7	-0.04162	0.00001	-0.09691	0	0.0608	0
46	SLE RA 8	-0.00176	0	-0.02465	0	0.0086	0
46	SLE RA 9	-0.03166	0.00001	-0.07884	0	0.0478	0
46	SLE RA 10	-0.00212	0	-0.02561	0	0.0091	0
46	SLE RA 11	-0.03202	0.00001	-0.0798	0	0.0483	0
46	SLE RA 12	-0.00212	0	-0.02561	0	0.0091	0
46	SLE RA 13	-0.03202	0.00001	-0.0798	0	0.0483	0
46	SLE RA 14	-0.04138	-0.00001	-0.09629	0.0001	0.0605	0
46	SLE RA 15	-0.04138	0	-0.09629	0.0001	0.0605	0
46	SLE RA 16	-0.00152	-0.00001	-0.02404	0	0.0082	0
46	SLE RA 17	-0.03142	0	-0.07823	0	0.0474	0
46	SLE RA 18	-0.04174	-0.00001	-0.09725	0.0001	0.061	0
46	SLE RA 19	-0.04174	0	-0.09725	0.0001	0.061	0
46	SLE RA 20	-0.00188	-0.00001	-0.025	0	0.0087	0
46	SLE RA 21	-0.03178	0	-0.07919	0	0.0479	0
46	SLE RA 22	-0.00224	-0.00002	-0.02596	0	0.0092	0
46	SLE RA 23	-0.03214	-0.00001	-0.08015	0.0001	0.0484	0
46	SLE RA 24	-0.00224	-0.00001	-0.02596	0	0.0092	0
46	SLE RA 25	-0.03214	-0.00001	-0.08015	0.0001	0.0484	0
46	SLE RA 26	-0.0017	-0.00004	-0.02456	0.0001	0.0084	0
46	SLE RA 27	-0.0316	-0.00003	-0.07875	0.0001	0.0476	0
46	SLE RA 28	-0.0017	-0.00004	-0.02456	0.0001	0.0084	0
46	SLE RA 29	-0.0316	-0.00003	-0.07875	0.0001	0.0476	0
46	SLE RA 30	-0.00206	-0.00004	-0.02552	0.0001	0.0089	0
46	SLE RA 31	-0.03196	-0.00003	-0.07971	0.0001	0.048	0
46	SLE RA 32	-0.00206	-0.00004	-0.02552	0.0001	0.0089	0
46	SLE RA 33	-0.03196	-0.00003	-0.07971	0.0001	0.048	0
46	SLE FR 1	-0.00139	0	-0.02369	0	0.0081	0
46	SLE FR 2	-0.03129	0.00001	-0.07788	0	0.0473	0
46	SLE FR 3	-0.00139	0	-0.02369	0	0.0081	0
46	SLE FR 4	-0.00154	0	-0.02408	0	0.0083	0
46	SLE FR 5	-0.00152	-0.00002	-0.02404	0	0.0082	0
46	SLE QP 1	-0.00139	0	-0.02369	0	0.0081	0
46	SLO 1	-0.01103	-0.00227	-0.01518	0.2298	0.0091	-0.0024
46	SLO 2	-0.01103	-0.00227	-0.01518	0.2298	0.0091	-0.0024
46	SLO 3	-0.01103	0.00227	-0.01518	-0.2298	0.0091	0.0024
46	SLO 4	-0.01103	0.00227	-0.01518	-0.2298	0.0091	0.0024
46	SLO 5	-0.00429	-0.00758	-0.02114	0.7661	0.0084	-0.0079
46	SLO 6	-0.00429	-0.00758	-0.02114	0.7661	0.0084	-0.0079
46	SLO 7	-0.00429	0.00758	-0.02114	-0.7661	0.0084	0.0079
46	SLO 8	-0.00429	0.00758	-0.02114	-0.7661	0.0084	0.0079
46	SLO 9	0.0015	-0.00758	-0.02624	0.7661	0.0078	-0.0079
46	SLO 10	0.0015	-0.00758	-0.02624	0.7661	0.0078	-0.0079
46	SLO 11	0.0015	0.00758	-0.02624	-0.7661	0.0078	0.0079
46	SLO 12	0.0015	0.00758	-0.02624	-0.7661	0.0078	0.0079
46	SLO 13	0.00825	-0.00227	-0.0322	0.2298	0.0072	-0.0024
46	SLO 14	0.00825	-0.00227	-0.0322	0.2298	0.0072	-0.0024
46	SLO 15	0.00825	0.00227	-0.0322	-0.2298	0.0072	0.0024
46	SLO 16	0.00825	0.00227	-0.0322	-0.2298	0.0072	0.0024
46	SLD 1	-0.00932	-0.0021	-0.0167	0.2124	0.0089	-0.0022
46	SLD 2	-0.00932	-0.0021	-0.0167	0.2124	0.0089	-0.0022
46	SLD 3	-0.00932	0.0021	-0.0167	-0.2124	0.0089	0.0022
46	SLD 4	-0.00932	0.0021	-0.0167	-0.2124	0.0089	0.0022
46	SLD 5	-0.00377	-0.007	-0.02159	0.7079	0.0084	-0.0073
46	SLD 6	-0.00377	-0.007	-0.02159	0.7079	0.0084	-0.0073
46	SLD 7	-0.00377	0.007	-0.02159	-0.7079	0.0084	0.0073
46	SLD 8	-0.00377	0.007	-0.02159	-0.7079	0.0084	0.0073
46	SLD 9	0.00098	-0.007	-0.02579	0.7079	0.0079	-0.0073

Nodo	Cont.	Spostamento			Rotazione		
Ind.	N.br.	ux	uy	uz	rx	ry	rz
46	SLD 10	0.00098	-0.007	-0.02579	0.7079	0.0079	-0.0073
46	SLD 11	0.00098	0.007	-0.02579	-0.7079	0.0079	0.0073
46	SLD 12	0.00098	0.007	-0.02579	-0.7079	0.0079	0.0073
46	SLD 13	0.00653	-0.0021	-0.03069	0.2124	0.0073	-0.0022
46	SLD 14	0.00653	-0.0021	-0.03069	0.2124	0.0073	-0.0022
46	SLD 15	0.00653	0.0021	-0.03069	-0.2124	0.0073	0.0022
46	SLD 16	0.00653	0.0021	-0.03069	-0.2124	0.0073	0.0022
46	SLV 1	-0.01847	-0.00554	-0.00862	0.5601	0.0098	-0.0058
46	SLV 2	-0.01847	-0.00554	-0.00862	0.5601	0.0098	-0.0058
46	SLV 3	-0.01847	0.00554	-0.00862	-0.5601	0.0098	0.0058
46	SLV 4	-0.01847	0.00554	-0.00862	-0.5601	0.0098	0.0058
46	SLV 5	-0.00652	-0.01847	-0.01917	1.867	0.0086	-0.0192
46	SLV 6	-0.00652	-0.01847	-0.01917	1.867	0.0086	-0.0192
46	SLV 7	-0.00652	0.01847	-0.01917	-1.867	0.0086	0.0192
46	SLV 8	-0.00652	0.01847	-0.01917	-1.867	0.0086	0.0192
46	SLV 9	0.00373	-0.01847	-0.02821	1.867	0.0076	-0.0192
46	SLV 10	0.00373	-0.01847	-0.02821	1.867	0.0076	-0.0192
46	SLV 11	0.00373	0.01847	-0.02821	-1.867	0.0076	0.0192
46	SLV 12	0.00373	0.01847	-0.02821	-1.867	0.0076	0.0192
46	SLV 13	0.01568	-0.00554	-0.03877	0.5601	0.0064	-0.0058
46	SLV 14	0.01568	-0.00554	-0.03877	0.5601	0.0064	-0.0058
46	SLV 15	0.01568	0.00554	-0.03877	-0.5601	0.0064	0.0058
46	SLV 16	0.01568	0.00554	-0.03877	-0.5601	0.0064	0.0058
47	SLU 1	0.00139	0	-0.02369	0	-0.0081	0
47	SLU 2	0.06119	0.00001	-0.13207	0	-0.0865	0
47	SLU 3	0.06119	0.00002	-0.13207	0	-0.0865	0
47	SLU 4	0.00139	0	-0.02369	0	-0.0081	0
47	SLU 5	0.04624	0.00002	-0.10498	0	-0.0669	0
47	SLU 6	0.06154	0.00001	-0.1337	0	-0.0872	0
47	SLU 7	0.06154	0.00002	-0.1337	0	-0.0872	0
47	SLU 8	0.00175	0	-0.02532	0	-0.0089	0
47	SLU 9	0.04659	0.00002	-0.10661	0	-0.0677	0
47	SLU 10	0.0021	0	-0.02694	0	-0.0097	0
47	SLU 11	0.04695	0.00001	-0.10823	0	-0.0684	0
47	SLU 12	0.0021	0	-0.02694	0	-0.0097	0
47	SLU 13	0.04695	0.00001	-0.10823	0	-0.0684	0
47	SLU 14	0.06106	-0.00001	-0.13291	0.0001	-0.0867	0
47	SLU 15	0.06106	-0.00001	-0.13291	0.0001	-0.0867	0
47	SLU 16	0.00126	-0.00002	-0.02453	0.0001	-0.0083	0
47	SLU 17	0.04611	-0.00001	-0.10581	0.0001	-0.0671	0
47	SLU 18	0.06141	-0.00001	-0.13453	0.0001	-0.0875	0
47	SLU 19	0.06141	-0.00001	-0.13453	0.0001	-0.0875	0
47	SLU 20	0.00161	-0.00002	-0.02615	0.0001	-0.0091	0
47	SLU 21	0.04646	-0.00001	-0.10744	0.0001	-0.0679	0
47	SLU 22	0.00196	-0.00002	-0.02778	0.0001	-0.0099	0
47	SLU 23	0.04681	-0.00001	-0.10906	0.0001	-0.0686	0
47	SLU 24	0.00196	-0.00002	-0.02778	0.0001	-0.0099	0
47	SLU 25	0.04681	-0.00001	-0.10906	0.0001	-0.0686	0
47	SLU 26	0.00105	-0.00006	-0.02578	0.0002	-0.0087	0
47	SLU 27	0.0459	-0.00005	-0.10706	0.0002	-0.0674	0
47	SLU 28	0.00105	-0.00006	-0.02578	0.0002	-0.0087	0
47	SLU 29	0.0459	-0.00004	-0.10706	0.0002	-0.0674	0
47	SLU 30	0.0014	-0.00006	-0.0274	0.0002	-0.0094	0
47	SLU 31	0.04625	-0.00005	-0.10869	0.0002	-0.0682	0
47	SLU 32	0.0014	-0.00006	-0.0274	0.0002	-0.0094	0
47	SLU 33	0.04625	-0.00004	-0.10869	0.0002	-0.0682	0
47	SLU 34	0.00139	0	-0.02369	0	-0.0081	0
47	SLU 35	0.06119	0.00001	-0.13207	0	-0.0865	0
47	SLU 36	0.06119	0.00002	-0.13207	0	-0.0865	0
47	SLU 37	0.00139	0	-0.02369	0	-0.0081	0
47	SLU 38	0.04624	0.00002	-0.10498	0	-0.0669	0
47	SLU 39	0.06154	0.00001	-0.1337	0	-0.0872	0
47	SLU 40	0.06154	0.00002	-0.1337	0	-0.0872	0
47	SLU 41	0.00175	0	-0.02532	0	-0.0089	0
47	SLU 42	0.04659	0.00002	-0.10661	0	-0.0677	0
47	SLU 43	0.0021	0	-0.02694	0	-0.0097	0
47	SLU 44	0.04695	0.00001	-0.10823	0	-0.0684	0
47	SLU 45	0.0021	0	-0.02694	0	-0.0097	0
47	SLU 46	0.04695	0.00001	-0.10823	0	-0.0684	0
47	SLU 47	0.06106	-0.00001	-0.13291	0.0001	-0.0867	0
47	SLU 48	0.06106	-0.00001	-0.13291	0.0001	-0.0867	0
47	SLU 49	0.00126	-0.00002	-0.02453	0.0001	-0.0083	0
47	SLU 50	0.04611	-0.00001	-0.10581	0.0001	-0.0671	0
47	SLU 51	0.06141	-0.00001	-0.13453	0.0001	-0.0875	0
47	SLU 52	0.06141	-0.00001	-0.13453	0.0001	-0.0875	0
47	SLU 53	0.00161	-0.00002	-0.02615	0.0001	-0.0091	0
47	SLU 54	0.04646	-0.00001	-0.10744	0.0001	-0.0679	0
47	SLU 55	0.00196	-0.00002	-0.02778	0.0001	-0.0099	0
47	SLU 56	0.04681	-0.00001	-0.10906	0.0001	-0.0686	0
47	SLU 57	0.00196	-0.00002	-0.02778	0.0001	-0.0099	0
47	SLU 58	0.04681	-0.00001	-0.10906	0.0001	-0.0686	0
47	SLU 59	0.00105	-0.00006	-0.02578	0.0002	-0.0087	0
47	SLU 60	0.0459	-0.00005	-0.10706	0.0002	-0.0674	0
47	SLU 61	0.00105	-0.00006	-0.02578	0.0002	-0.0087	0
47	SLU 62	0.0459	-0.00004	-0.10706	0.0002	-0.0674	0
47	SLU 63	0.0014	-0.00006	-0.0274	0.0002	-0.0094	0
47	SLU 64	0.04625	-0.00005	-0.10869	0.0002	-0.0682	0
47	SLU 65	0.0014	-0.00006	-0.0274	0.0002	-0.0094	0
47	SLU 66	0.04625	-0.00004	-0.10869	0.0002	-0.0682	0
47	SLU 67	0.00181	0	-0.0308	0	-0.0106	0
47	SLU 68	0.06161	0.00001	-0.13918	0	-0.0889	0
47	SLU 69	0.06161	0.00002	-0.13918	0	-0.0889	0
47	SLU 70	0.00181	0	-0.0308	0	-0.0106	0
47	SLU 71	0.04666	0.00002	-0.11209	0	-0.0693	0
47	SLU 72	0.06196	0.00001	-0.14081	0	-0.0897	0

Nodo	Cont.	Spostamento			Rotazione		
Ind.	N.br.	ux	uy	uz	rx	ry	rz
47	SLU 73	0.06196	0.00002	-0.14081	0	-0.0897	0
47	SLU 74	0.00216	0	-0.03243	0	-0.0113	0
47	SLU 75	0.04701	0.00002	-0.11371	0	-0.0701	0
47	SLU 76	0.00252	0	-0.03405	0	-0.0121	0
47	SLU 77	0.04736	0.00001	-0.11534	0	-0.0709	0
47	SLU 78	0.00252	0	-0.03405	0	-0.0121	0
47	SLU 79	0.04736	0.00001	-0.11534	0	-0.0709	0
47	SLU 80	0.06147	-0.00001	-0.14002	0.0001	-0.0891	0
47	SLU 81	0.06147	-0.00001	-0.14002	0.0001	-0.0891	0
47	SLU 82	0.00168	-0.00002	-0.03163	0.0001	-0.0108	0
47	SLU 83	0.04652	-0.00001	-0.11292	0.0001	-0.0695	0
47	SLU 84	0.06183	-0.00001	-0.14164	0.0001	-0.0899	0
47	SLU 85	0.06183	-0.00001	-0.14164	0.0001	-0.0899	0
47	SLU 86	0.00203	-0.00002	-0.03326	0.0001	-0.0116	0
47	SLU 87	0.04688	-0.00001	-0.11455	0.0001	-0.0703	0
47	SLU 88	0.00238	-0.00002	-0.03488	0.0001	-0.0123	0
47	SLU 89	0.04723	-0.00001	-0.11617	0.0001	-0.0711	0
47	SLU 90	0.00238	-0.00002	-0.03488	0.0001	-0.0123	0
47	SLU 91	0.04723	-0.00001	-0.11617	0.0001	-0.0711	0
47	SLU 92	0.00147	-0.00006	-0.03288	0.0002	-0.0111	0
47	SLU 93	0.04632	-0.00005	-0.11417	0.0002	-0.0699	0
47	SLU 94	0.00147	-0.00006	-0.03288	0.0002	-0.0111	0
47	SLU 95	0.04632	-0.00004	-0.11417	0.0002	-0.0699	0
47	SLU 96	0.00182	-0.00006	-0.03451	0.0002	-0.0119	0
47	SLU 97	0.04667	-0.00005	-0.1158	0.0002	-0.0706	0
47	SLU 98	0.00182	-0.00006	-0.03451	0.0002	-0.0119	0
47	SLU 99	0.04667	-0.00004	-0.1158	0.0002	-0.0706	0
47	SLU 100	0.00181	0	-0.0308	0	-0.0106	0
47	SLU 101	0.06161	0.00001	-0.13918	0	-0.0889	0
47	SLU 102	0.06161	0.00002	-0.13918	0	-0.0889	0
47	SLU 103	0.00181	0	-0.0308	0	-0.0106	0
47	SLU 104	0.04666	0.00002	-0.11209	0	-0.0693	0
47	SLU 105	0.06196	0.00001	-0.14081	0	-0.0897	0
47	SLU 106	0.06196	0.00002	-0.14081	0	-0.0897	0
47	SLU 107	0.00216	0	-0.03243	0	-0.0113	0
47	SLU 108	0.04701	0.00002	-0.11371	0	-0.0701	0
47	SLU 109	0.00252	0	-0.03405	0	-0.0121	0
47	SLU 110	0.04736	0.00001	-0.11534	0	-0.0709	0
47	SLU 111	0.00252	0	-0.03405	0	-0.0121	0
47	SLU 112	0.04736	0.00001	-0.11534	0	-0.0709	0
47	SLU 113	0.06147	-0.00001	-0.14002	0.0001	-0.0891	0
47	SLU 114	0.06147	-0.00001	-0.14002	0.0001	-0.0891	0
47	SLU 115	0.00168	-0.00002	-0.03163	0.0001	-0.0108	0
47	SLU 116	0.04652	-0.00001	-0.11292	0.0001	-0.0695	0
47	SLU 117	0.06183	-0.00001	-0.14164	0.0001	-0.0899	0
47	SLU 118	0.06183	-0.00001	-0.14164	0.0001	-0.0899	0
47	SLU 119	0.00203	-0.00002	-0.03326	0.0001	-0.0116	0
47	SLU 120	0.04688	-0.00001	-0.11455	0.0001	-0.0703	0
47	SLU 121	0.00238	-0.00002	-0.03488	0.0001	-0.0123	0
47	SLU 122	0.04723	-0.00001	-0.11617	0.0001	-0.0711	0
47	SLU 123	0.00238	-0.00002	-0.03488	0.0001	-0.0123	0
47	SLU 124	0.04723	-0.00001	-0.11617	0.0001	-0.0711	0
47	SLU 125	0.00147	-0.00006	-0.03288	0.0002	-0.0111	0
47	SLU 126	0.04632	-0.00005	-0.11417	0.0002	-0.0699	0
47	SLU 127	0.00147	-0.00006	-0.03288	0.0002	-0.0111	0
47	SLU 128	0.04632	-0.00004	-0.11417	0.0002	-0.0699	0
47	SLU 129	0.00182	-0.00006	-0.03451	0.0002	-0.0119	0
47	SLU 130	0.04667	-0.00005	-0.1158	0.0002	-0.0706	0
47	SLU 131	0.00182	-0.00006	-0.03451	0.0002	-0.0119	0
47	SLU 132	0.04667	-0.00004	-0.1158	0.0002	-0.0706	0
47	SLE RA 1	0.00139	0	-0.02369	0	-0.0081	0
47	SLE RA 2	0.04126	0.00001	-0.09595	0	-0.0604	0
47	SLE RA 3	0.04126	0.00001	-0.09595	0	-0.0604	0
47	SLE RA 4	0.00139	0	-0.02369	0	-0.0081	0
47	SLE RA 5	0.03129	0.00001	-0.07788	0	-0.0473	0
47	SLE RA 6	0.04149	0.00001	-0.09703	0	-0.0609	0
47	SLE RA 7	0.04149	0.00001	-0.09703	0	-0.0609	0
47	SLE RA 8	0.00163	0	-0.02478	0	-0.0086	0
47	SLE RA 9	0.03153	0.00001	-0.07897	0	-0.0478	0
47	SLE RA 10	0.00186	0	-0.02586	0	-0.0092	0
47	SLE RA 11	0.03176	0.00001	-0.08005	0	-0.0483	0
47	SLE RA 12	0.00186	0	-0.02586	0	-0.0092	0
47	SLE RA 13	0.03176	0.00001	-0.08005	0	-0.0483	0
47	SLE RA 14	0.04117	-0.00001	-0.0965	0.0001	-0.0605	0
47	SLE RA 15	0.04117	0	-0.0965	0.0001	-0.0605	0
47	SLE RA 16	0.0013	-0.00001	-0.02425	0	-0.0083	0
47	SLE RA 17	0.0312	0	-0.07844	0	-0.0474	0
47	SLE RA 18	0.0414	-0.00001	-0.09759	0.0001	-0.061	0
47	SLE RA 19	0.0414	0	-0.09759	0.0001	-0.061	0
47	SLE RA 20	0.00154	-0.00001	-0.02533	0	-0.0088	0
47	SLE RA 21	0.03144	0	-0.07952	0	-0.048	0
47	SLE RA 22	0.00177	-0.00002	-0.02642	0	-0.0093	0
47	SLE RA 23	0.03167	-0.00001	-0.08061	0.0001	-0.0485	0
47	SLE RA 24	0.00177	-0.00001	-0.02642	0	-0.0093	0
47	SLE RA 25	0.03167	-0.00001	-0.08061	0.0001	-0.0485	0
47	SLE RA 26	0.00117	-0.00004	-0.02508	0.0001	-0.0085	0
47	SLE RA 27	0.03107	-0.00003	-0.07927	0.0001	-0.0477	0
47	SLE RA 28	0.00117	-0.00004	-0.02508	0.0001	-0.0085	0
47	SLE RA 29	0.03107	-0.00003	-0.07927	0.0001	-0.0477	0
47	SLE RA 30	0.0014	-0.00004	-0.02616	0.0001	-0.009	0
47	SLE RA 31	0.0313	-0.00003	-0.08036	0.0001	-0.0482	0
47	SLE RA 32	0.0014	-0.00004	-0.02616	0.0001	-0.009	0
47	SLE RA 33	0.0313	-0.00003	-0.08036	0.0001	-0.0482	0
47	SLE FR 1	0.00139	0	-0.02369	0	-0.0081	0
47	SLE FR 2	0.03129	0.00001	-0.07788	0	-0.0473	0

Nodo	Cont.	Spostamento			Rotazione		
Ind.	N.br.	ux	uy	uz	rx	ry	rz
47	SLE FR 3	0.00139	0	-0.02369	0	-0.0081	0
47	SLE FR 4	0.00149	0	-0.02413	0	-0.0083	0
47	SLE FR 5	0.0013	-0.00002	-0.02425	0	-0.0083	0
47	SLE QP 1	0.00139	0	-0.02369	0	-0.0081	0
47	SLO 1	-0.00825	-0.00227	-0.0322	0.2298	-0.0072	0.0024
47	SLO 2	-0.00825	-0.00227	-0.0322	0.2298	-0.0072	0.0024
47	SLO 3	-0.00825	0.00227	-0.0322	-0.2298	-0.0072	-0.0024
47	SLO 4	-0.00825	0.00227	-0.0322	-0.2298	-0.0072	-0.0024
47	SLO 5	-0.0015	-0.00758	-0.02624	0.7661	-0.0078	0.0079
47	SLO 6	-0.0015	-0.00758	-0.02624	0.7661	-0.0078	0.0079
47	SLO 7	-0.0015	0.00758	-0.02624	-0.7661	-0.0078	-0.0079
47	SLO 8	-0.0015	0.00758	-0.02624	-0.7661	-0.0078	-0.0079
47	SLO 9	0.00429	-0.00758	-0.02114	0.7661	-0.0084	0.0079
47	SLO 10	0.00429	-0.00758	-0.02114	0.7661	-0.0084	0.0079
47	SLO 11	0.00429	0.00758	-0.02114	-0.7661	-0.0084	-0.0079
47	SLO 12	0.00429	0.00758	-0.02114	-0.7661	-0.0084	-0.0079
47	SLO 13	0.01103	-0.00227	-0.01518	0.2298	-0.0091	0.0024
47	SLO 14	0.01103	-0.00227	-0.01518	0.2298	-0.0091	0.0024
47	SLO 15	0.01103	0.00227	-0.01518	-0.2298	-0.0091	-0.0024
47	SLO 16	0.01103	0.00227	-0.01518	-0.2298	-0.0091	-0.0024
47	SLD 1	-0.00653	-0.0021	-0.03069	0.2124	-0.0073	0.0022
47	SLD 2	-0.00653	-0.0021	-0.03069	0.2124	-0.0073	0.0022
47	SLD 3	-0.00653	0.0021	-0.03069	-0.2124	-0.0073	-0.0022
47	SLD 4	-0.00653	0.0021	-0.03069	-0.2124	-0.0073	-0.0022
47	SLD 5	-0.00098	-0.007	-0.02579	0.7079	-0.0079	0.0073
47	SLD 6	-0.00098	-0.007	-0.02579	0.7079	-0.0079	0.0073
47	SLD 7	-0.00098	0.007	-0.02579	-0.7079	-0.0079	-0.0073
47	SLD 8	-0.00098	0.007	-0.02579	-0.7079	-0.0079	-0.0073
47	SLD 9	0.00377	-0.007	-0.02159	0.7079	-0.0084	0.0073
47	SLD 10	0.00377	-0.007	-0.02159	0.7079	-0.0084	0.0073
47	SLD 11	0.00377	0.007	-0.02159	-0.7079	-0.0084	-0.0073
47	SLD 12	0.00377	0.007	-0.02159	-0.7079	-0.0084	-0.0073
47	SLD 13	0.00932	-0.0021	-0.0167	0.2124	-0.0089	0.0022
47	SLD 14	0.00932	-0.0021	-0.0167	0.2124	-0.0089	0.0022
47	SLD 15	0.00932	0.0021	-0.0167	-0.2124	-0.0089	-0.0022
47	SLD 16	0.00932	0.0021	-0.0167	-0.2124	-0.0089	-0.0022
47	SLV 1	-0.01568	-0.00554	-0.03877	0.5601	-0.0064	0.0058
47	SLV 2	-0.01568	-0.00554	-0.03877	0.5601	-0.0064	0.0058
47	SLV 3	-0.01568	0.00554	-0.03877	-0.5601	-0.0064	-0.0058
47	SLV 4	-0.01568	0.00554	-0.03877	-0.5601	-0.0064	-0.0058
47	SLV 5	-0.00373	-0.01847	-0.02821	1.867	-0.0076	0.0192
47	SLV 6	-0.00373	-0.01847	-0.02821	1.867	-0.0076	0.0192
47	SLV 7	-0.00373	0.01847	-0.02821	-1.867	-0.0076	-0.0192
47	SLV 8	-0.00373	0.01847	-0.02821	-1.867	-0.0076	-0.0192
47	SLV 9	0.00652	-0.01847	-0.01917	1.867	-0.0086	0.0192
47	SLV 10	0.00652	-0.01847	-0.01917	1.867	-0.0086	0.0192
47	SLV 11	0.00652	0.01847	-0.01917	-1.867	-0.0086	-0.0192
47	SLV 12	0.00652	0.01847	-0.01917	-1.867	-0.0086	-0.0192
47	SLV 13	0.01847	-0.00554	-0.00862	0.5601	-0.0098	0.0058
47	SLV 14	0.01847	-0.00554	-0.00862	0.5601	-0.0098	0.0058
47	SLV 15	0.01847	0.00554	-0.00862	-0.5601	-0.0098	-0.0058
47	SLV 16	0.01847	0.00554	-0.00862	-0.5601	-0.0098	-0.0058
48	SLU 1	0.00426	0	-0.00757	0	-0.0051	0
48	SLU 2	0.09621	0	0.00396	0	-0.0262	0
48	SLU 3	0.09621	0	0.00396	0	-0.0262	0
48	SLU 4	0.00426	0	-0.00757	0	-0.0051	0
48	SLU 5	0.07322	0	0.00108	0	-0.0209	-0.0001
48	SLU 6	0.09697	0	0.00376	0	-0.0266	0
48	SLU 7	0.09697	0	0.00376	0	-0.0266	0
48	SLU 8	0.00501	0	-0.00777	0	-0.0055	0
48	SLU 9	0.07398	0	0.00088	0	-0.0213	-0.0001
48	SLU 10	0.00576	0	-0.00797	0	-0.0059	0
48	SLU 11	0.07473	0	0.00068	0	-0.0217	0
48	SLU 12	0.00576	0	-0.00797	0	-0.0059	0
48	SLU 13	0.07473	0	0.00068	0	-0.0217	0
48	SLU 14	0.09626	-0.00001	0.00368	0	-0.0265	0.0001
48	SLU 15	0.09626	-0.00001	0.00368	0	-0.0265	0.0001
48	SLU 16	0.00431	-0.00001	-0.00785	0	-0.0054	0.0001
48	SLU 17	0.07327	-0.00001	0.0008	0	-0.0212	0.0001
48	SLU 18	0.09702	-0.00001	0.00348	0	-0.0269	0.0001
48	SLU 19	0.09702	-0.00001	0.00348	0	-0.0269	0.0001
48	SLU 20	0.00506	-0.00001	-0.00805	0	-0.0058	0.0001
48	SLU 21	0.07403	-0.00001	0.0006	0	-0.0216	0.0001
48	SLU 22	0.00581	-0.00001	-0.00825	-0.0001	-0.0062	0.0002
48	SLU 23	0.07478	-0.00001	0.0004	0	-0.022	0.0001
48	SLU 24	0.00581	-0.00001	-0.00825	-0.0001	-0.0062	0.0001
48	SLU 25	0.07478	-0.00001	0.0004	0	-0.022	0.0001
48	SLU 26	0.00438	-0.00002	-0.00827	-0.0002	-0.0058	0.0004
48	SLU 27	0.07335	-0.00002	0.00038	-0.0001	-0.0216	0.0004
48	SLU 28	0.00438	-0.00002	-0.00827	-0.0002	-0.0058	0.0004
48	SLU 29	0.07335	-0.00002	0.00038	-0.0001	-0.0216	0.0004
48	SLU 30	0.00513	-0.00002	-0.00847	-0.0002	-0.0062	0.0004
48	SLU 31	0.0741	-0.00002	0.00018	-0.0001	-0.022	0.0004
48	SLU 32	0.00513	-0.00002	-0.00847	-0.0002	-0.0062	0.0004
48	SLU 33	0.0741	-0.00002	0.00018	-0.0001	-0.022	0.0004
48	SLU 34	0.00426	0	-0.00757	0	-0.0051	0
48	SLU 35	0.09621	0	0.00396	0	-0.0262	0
48	SLU 36	0.09621	0	0.00396	0	-0.0262	0
48	SLU 37	0.00426	0	-0.00757	0	-0.0051	0
48	SLU 38	0.07322	0	0.00108	0	-0.0209	-0.0001
48	SLU 39	0.09697	0	0.00376	0	-0.0266	0
48	SLU 40	0.09697	0	0.00376	0	-0.0266	0
48	SLU 41	0.00501	0	-0.00777	0	-0.0055	0
48	SLU 42	0.07398	0	0.00088	0	-0.0213	-0.0001
48	SLU 43	0.00576	0	-0.00797	0	-0.0059	0

Nodo	Cont.	Spostamento			Rotazione		
Ind.	N.br.	ux	uy	uz	rx	ry	rz
48	SLU 44	0.07473	0	0.00068	0	-0.0217	0
48	SLU 45	0.00576	0	-0.00797	0	-0.0059	0
48	SLU 46	0.07473	0	0.00068	0	-0.0217	0
48	SLU 47	0.09626	-0.00001	0.00368	0	-0.0265	0.0001
48	SLU 48	0.09626	-0.00001	0.00368	0	-0.0265	0.0001
48	SLU 49	0.00431	-0.00001	-0.00785	0	-0.0054	0.0001
48	SLU 50	0.07327	-0.00001	0.0008	0	-0.0212	0.0001
48	SLU 51	0.09702	-0.00001	0.00348	0	-0.0269	0.0001
48	SLU 52	0.09702	-0.00001	0.00348	0	-0.0269	0.0001
48	SLU 53	0.00506	-0.00001	-0.00805	0	-0.0058	0.0001
48	SLU 54	0.07403	-0.00001	0.0006	0	-0.0216	0.0001
48	SLU 55	0.00581	-0.00001	-0.00825	-0.0001	-0.0062	0.0002
48	SLU 56	0.07478	-0.00001	0.0004	0	-0.022	0.0001
48	SLU 57	0.00581	-0.00001	-0.00825	-0.0001	-0.0062	0.0001
48	SLU 58	0.07478	-0.00001	0.0004	0	-0.022	0.0001
48	SLU 59	0.00438	-0.00002	-0.00827	-0.0002	-0.0058	0.0004
48	SLU 60	0.07335	-0.00002	0.00038	-0.0001	-0.0216	0.0004
48	SLU 61	0.00438	-0.00002	-0.00827	-0.0002	-0.0058	0.0004
48	SLU 62	0.07335	-0.00002	0.00038	-0.0001	-0.0216	0.0004
48	SLU 63	0.00513	-0.00002	-0.00847	-0.0002	-0.0062	0.0004
48	SLU 64	0.0741	-0.00002	0.00018	-0.0001	-0.022	0.0004
48	SLU 65	0.00513	-0.00002	-0.00847	-0.0002	-0.0062	0.0004
48	SLU 66	0.0741	-0.00002	0.00018	-0.0001	-0.022	0.0004
48	SLU 67	0.00553	0	-0.00985	0	-0.0066	0
48	SLU 68	0.09749	0	0.00169	0	-0.0277	0
48	SLU 69	0.09749	0	0.00169	0	-0.0277	0
48	SLU 70	0.00553	0	-0.00985	0	-0.0066	0
48	SLU 71	0.0745	0	-0.00119	0	-0.0225	-0.0001
48	SLU 72	0.09824	0	0.00149	0	-0.0281	0
48	SLU 73	0.09824	0	0.00149	0	-0.0281	0
48	SLU 74	0.00629	0	-0.01004	0	-0.0071	0
48	SLU 75	0.07525	0	-0.00139	0	-0.0229	-0.0001
48	SLU 76	0.00704	0	-0.01024	0	-0.0075	0
48	SLU 77	0.07601	0	-0.00159	0	-0.0233	0
48	SLU 78	0.00704	0	-0.01024	0	-0.0075	0
48	SLU 79	0.07601	0	-0.00159	0	-0.0233	0
48	SLU 80	0.09754	-0.00001	0.00141	0	-0.028	0.0001
48	SLU 81	0.09754	-0.00001	0.00141	0	-0.028	0.0001
48	SLU 82	0.00558	-0.00001	-0.01012	0	-0.0069	0.0001
48	SLU 83	0.07455	-0.00001	-0.00147	0	-0.0227	0.0001
48	SLU 84	0.09829	-0.00001	0.00121	0	-0.0284	0.0001
48	SLU 85	0.09829	-0.00001	0.00121	0	-0.0284	0.0001
48	SLU 86	0.00634	-0.00001	-0.01032	0	-0.0073	0.0001
48	SLU 87	0.0753	-0.00001	-0.00167	0	-0.0231	0.0001
48	SLU 88	0.00709	-0.00001	-0.01052	-0.0001	-0.0077	0.0002
48	SLU 89	0.07606	-0.00001	-0.00187	0	-0.0235	0.0001
48	SLU 90	0.00709	-0.00001	-0.01052	-0.0001	-0.0077	0.0001
48	SLU 91	0.07606	-0.00001	-0.00187	0	-0.0235	0.0001
48	SLU 92	0.00566	-0.00002	-0.01054	-0.0002	-0.0073	0.0004
48	SLU 93	0.07463	-0.00002	-0.00189	-0.0001	-0.0231	0.0004
48	SLU 94	0.00566	-0.00002	-0.01054	-0.0002	-0.0073	0.0004
48	SLU 95	0.07463	-0.00002	-0.00189	-0.0001	-0.0231	0.0004
48	SLU 96	0.00641	-0.00002	-0.01074	-0.0002	-0.0077	0.0004
48	SLU 97	0.07538	-0.00002	-0.00209	-0.0001	-0.0235	0.0004
48	SLU 98	0.00641	-0.00002	-0.01074	-0.0002	-0.0077	0.0004
48	SLU 99	0.07538	-0.00002	-0.00209	-0.0001	-0.0235	0.0004
48	SLU 100	0.00553	0	-0.00985	0	-0.0066	0
48	SLU 101	0.09749	0	0.00169	0	-0.0277	0
48	SLU 102	0.09749	0	0.00169	0	-0.0277	0
48	SLU 103	0.00553	0	-0.00985	0	-0.0066	0
48	SLU 104	0.0745	0	-0.00119	0	-0.0225	-0.0001
48	SLU 105	0.09824	0	0.00149	0	-0.0281	0
48	SLU 106	0.09824	0	0.00149	0	-0.0281	0
48	SLU 107	0.00629	0	-0.01004	0	-0.0071	0
48	SLU 108	0.07525	0	-0.00139	0	-0.0229	-0.0001
48	SLU 109	0.00704	0	-0.01024	0	-0.0075	0
48	SLU 110	0.07601	0	-0.00159	0	-0.0233	0
48	SLU 111	0.00704	0	-0.01024	0	-0.0075	0
48	SLU 112	0.07601	0	-0.00159	0	-0.0233	0
48	SLU 113	0.09754	-0.00001	0.00141	0	-0.028	0.0001
48	SLU 114	0.09754	-0.00001	0.00141	0	-0.028	0.0001
48	SLU 115	0.00558	-0.00001	-0.01012	0	-0.0069	0.0001
48	SLU 116	0.07455	-0.00001	-0.00147	0	-0.0227	0.0001
48	SLU 117	0.09829	-0.00001	0.00121	0	-0.0284	0.0001
48	SLU 118	0.09829	-0.00001	0.00121	0	-0.0284	0.0001
48	SLU 119	0.00634	-0.00001	-0.01032	0	-0.0073	0.0001
48	SLU 120	0.0753	-0.00001	-0.00167	0	-0.0231	0.0001
48	SLU 121	0.00709	-0.00001	-0.01052	-0.0001	-0.0077	0.0002
48	SLU 122	0.07606	-0.00001	-0.00187	0	-0.0235	0.0001
48	SLU 123	0.00709	-0.00001	-0.01052	-0.0001	-0.0077	0.0001
48	SLU 124	0.07606	-0.00001	-0.00187	0	-0.0235	0.0001
48	SLU 125	0.00566	-0.00002	-0.01054	-0.0002	-0.0073	0.0004
48	SLU 126	0.07463	-0.00002	-0.00189	-0.0001	-0.0231	0.0004
48	SLU 127	0.00566	-0.00002	-0.01054	-0.0002	-0.0073	0.0004
48	SLU 128	0.07463	-0.00002	-0.00189	-0.0001	-0.0231	0.0004
48	SLU 129	0.00641	-0.00002	-0.01074	-0.0002	-0.0077	0.0004
48	SLU 130	0.07538	-0.00002	-0.00209	-0.0001	-0.0235	0.0004
48	SLU 131	0.00641	-0.00002	-0.01074	-0.0002	-0.0077	0.0004
48	SLU 132	0.07538	-0.00002	-0.00209	-0.0001	-0.0235	0.0004
48	SLE RA 1	0.00426	0	-0.00757	0	-0.0051	0
48	SLE RA 2	0.06556	0	0.00012	0	-0.0192	0
48	SLE RA 3	0.06556	0	0.00012	0	-0.0192	0
48	SLE RA 4	0.00426	0	-0.00757	0	-0.0051	0
48	SLE RA 5	0.05024	0	-0.00181	0	-0.0156	0
48	SLE RA 6	0.06606	0	-0.00002	0	-0.0194	0

Nodo	Cont.	Spostamento			Rotazione		
Ind.	N.br.	ux	uy	uz	rx	ry	rz
48	SLE RA 7	0.06606	0	-0.00002	0	-0.0194	0
48	SLE RA 8	0.00476	0	-0.00771	0	-0.0054	0
48	SLE RA 9	0.05074	0	-0.00194	0	-0.0159	0
48	SLE RA 10	0.00526	0	-0.00784	0	-0.0057	0
48	SLE RA 11	0.05124	0	-0.00207	0	-0.0162	0
48	SLE RA 12	0.00526	0	-0.00784	0	-0.0057	0
48	SLE RA 13	0.05124	0	-0.00207	0	-0.0162	0
48	SLE RA 14	0.06559	0	-0.00007	0	-0.0193	0.0001
48	SLE RA 15	0.06559	0	-0.00007	0	-0.0193	0.0001
48	SLE RA 16	0.00429	0	-0.00776	0	-0.0053	0.0001
48	SLE RA 17	0.05027	0	-0.00199	0	-0.0158	0.0001
48	SLE RA 18	0.0661	0	-0.0002	0	-0.0196	0.0001
48	SLE RA 19	0.0661	0	-0.0002	0	-0.0196	0.0001
48	SLE RA 20	0.00479	0	-0.00789	0	-0.0056	0.0001
48	SLE RA 21	0.05077	0	-0.00212	0	-0.0161	0.0001
48	SLE RA 22	0.00529	0	-0.00802	0	-0.0058	0.0001
48	SLE RA 23	0.05127	0	-0.00226	0	-0.0164	0.0001
48	SLE RA 24	0.00529	0	-0.00802	0	-0.0058	0.0001
48	SLE RA 25	0.05127	0	-0.00226	0	-0.0164	0.0001
48	SLE RA 26	0.00434	-0.00001	-0.00804	-0.0001	-0.0056	0.0003
48	SLE RA 27	0.05032	-0.00001	-0.00227	-0.0001	-0.0161	0.0003
48	SLE RA 28	0.00434	-0.00001	-0.00804	-0.0001	-0.0056	0.0003
48	SLE RA 29	0.05032	-0.00001	-0.00227	-0.0001	-0.0161	0.0002
48	SLE RA 30	0.00484	-0.00001	-0.00817	-0.0001	-0.0058	0.0003
48	SLE RA 31	0.05082	-0.00001	-0.0024	-0.0001	-0.0164	0.0003
48	SLE RA 32	0.00484	-0.00001	-0.00817	-0.0001	-0.0058	0.0003
48	SLE RA 33	0.05082	-0.00001	-0.0024	-0.0001	-0.0164	0.0002
48	SLE FR 1	0.00426	0	-0.00757	0	-0.0051	0
48	SLE FR 2	0.05024	0	-0.00181	0	-0.0156	0
48	SLE FR 3	0.00426	0	-0.00757	0	-0.0051	0
48	SLE FR 4	0.00446	0	-0.00763	0	-0.0052	0
48	SLE FR 5	0.00429	0	-0.00776	0	-0.0053	0.0001
48	SLE QP 1	0.00426	0	-0.00757	0	-0.0051	0
48	SLO 1	-0.00575	-0.00024	-0.01193	-0.1095	-0.0086	0.2622
48	SLO 2	-0.00575	-0.00024	-0.01193	-0.1095	-0.0086	0.2622
48	SLO 3	-0.00575	0.00024	-0.01193	0.1095	-0.0086	-0.2622
48	SLO 4	-0.00575	0.00024	-0.01193	0.1095	-0.0086	-0.2622
48	SLO 5	0.00126	-0.00079	-0.00888	-0.3651	-0.0061	0.8739
48	SLO 6	0.00126	-0.00079	-0.00888	-0.3651	-0.0061	0.8739
48	SLO 7	0.00126	0.00079	-0.00888	0.3651	-0.0061	-0.8739
48	SLO 8	0.00126	0.00079	-0.00888	0.3651	-0.0061	-0.8739
48	SLO 9	0.00726	-0.00079	-0.00627	-0.3651	-0.0041	0.8739
48	SLO 10	0.00726	-0.00079	-0.00627	-0.3651	-0.0041	0.8739
48	SLO 11	0.00726	0.00079	-0.00627	0.3651	-0.0041	-0.8739
48	SLO 12	0.00726	0.00079	-0.00627	0.3651	-0.0041	-0.8739
48	SLO 13	0.01426	-0.00024	-0.00322	-0.1095	-0.0017	0.2622
48	SLO 14	0.01426	-0.00024	-0.00322	-0.1095	-0.0017	0.2622
48	SLO 15	0.01426	0.00024	-0.00322	0.1095	-0.0017	-0.2622
48	SLO 16	0.01426	0.00024	-0.00322	0.1095	-0.0017	-0.2622
48	SLD 1	-0.00397	-0.00022	-0.01116	-0.1012	-0.0079	0.2422
48	SLD 2	-0.00397	-0.00022	-0.01116	-0.1012	-0.0079	0.2422
48	SLD 3	-0.00397	0.00022	-0.01116	0.1012	-0.0079	-0.2422
48	SLD 4	-0.00397	0.00022	-0.01116	0.1012	-0.0079	-0.2422
48	SLD 5	0.00179	-0.00073	-0.00865	-0.3374	-0.006	0.8075
48	SLD 6	0.00179	-0.00073	-0.00865	-0.3374	-0.006	0.8075
48	SLD 7	0.00179	0.00073	-0.00865	0.3374	-0.006	-0.8075
48	SLD 8	0.00179	0.00073	-0.00865	0.3374	-0.006	-0.8075
48	SLD 9	0.00672	-0.00073	-0.0065	-0.3374	-0.0043	0.8075
48	SLD 10	0.00672	-0.00073	-0.0065	-0.3374	-0.0043	0.8075
48	SLD 11	0.00672	0.00073	-0.0065	0.3374	-0.0043	-0.8075
48	SLD 12	0.00672	0.00073	-0.0065	0.3374	-0.0043	-0.8075
48	SLD 13	0.01248	-0.00022	-0.00399	-0.1012	-0.0023	0.2422
48	SLD 14	0.01248	-0.00022	-0.00399	-0.1012	-0.0023	0.2422
48	SLD 15	0.01248	0.00022	-0.00399	0.1012	-0.0023	-0.2422
48	SLD 16	0.01248	0.00022	-0.00399	0.1012	-0.0023	-0.2422
48	SLV 1	-0.01346	-0.00058	-0.01529	-0.2669	-0.0112	0.6389
48	SLV 2	-0.01346	-0.00058	-0.01529	-0.2669	-0.0112	0.6389
48	SLV 3	-0.01346	0.00058	-0.01529	0.2669	-0.0112	-0.6389
48	SLV 4	-0.01346	0.00058	-0.01529	0.2669	-0.0112	-0.6389
48	SLV 5	-0.00106	-0.00193	-0.00989	-0.8898	-0.0069	2.1297
48	SLV 6	-0.00106	-0.00193	-0.00989	-0.8898	-0.0069	2.1297
48	SLV 7	-0.00106	0.00193	-0.00989	0.8898	-0.0069	-2.1297
48	SLV 8	-0.00106	0.00193	-0.00989	0.8898	-0.0069	-2.1297
48	SLV 9	0.00957	-0.00193	-0.00526	-0.8898	-0.0033	2.1297
48	SLV 10	0.00957	-0.00193	-0.00526	-0.8898	-0.0033	2.1297
48	SLV 11	0.00957	0.00193	-0.00526	0.8898	-0.0033	-2.1297
48	SLV 12	0.00957	0.00193	-0.00526	0.8898	-0.0033	-2.1297
48	SLV 13	0.02198	-0.00058	0.00014	-0.2669	0.001	0.6389
48	SLV 14	0.02198	-0.00058	0.00014	-0.2669	0.001	0.6389
48	SLV 15	0.02198	0.00058	0.00014	0.2669	0.001	-0.6389
48	SLV 16	0.02198	0.00058	0.00014	0.2669	0.001	-0.6389
49	SLU 1	-0.00426	0.00007	-0.00757	-0.0001	0.0051	-0.0001
49	SLU 2	-0.11714	0.00007	0.005	-0.0001	0.032	-0.0002
49	SLU 3	-0.11714	0.00007	0.005	-0.0001	0.032	-0.0002
49	SLU 4	-0.00426	0.00007	-0.00757	-0.0001	0.0051	-0.0001
49	SLU 5	-0.08892	0.00007	0.00185	-0.0001	0.0253	-0.0001
49	SLU 6	-0.11807	0.00007	0.00486	-0.0001	0.0324	-0.0002
49	SLU 7	-0.11807	0.00007	0.00486	-0.0001	0.0324	-0.0002
49	SLU 8	-0.00519	0.00008	-0.00771	-0.0001	0.0055	-0.0001
49	SLU 9	-0.08985	0.00008	0.00172	-0.0001	0.0257	-0.0001
49	SLU 10	-0.00613	0.00007	-0.00785	-0.0001	0.0059	-0.0002
49	SLU 11	-0.09079	0.00008	0.00158	-0.0001	0.026	-0.0002
49	SLU 12	-0.00613	0.00008	-0.00785	-0.0001	0.0059	-0.0001
49	SLU 13	-0.09079	0.00008	0.00158	-0.0001	0.026	-0.0002
49	SLU 14	-0.11714	0.00007	0.005	-0.0002	0.032	-0.0003

Nodo	Cont.	Spostamento			Rotazione		
Ind.	N.br.	ux	uy	uz	rx	ry	rz
49	SLU 15	-0.11714	0.00007	0.005	-0.0002	0.032	-0.0003
49	SLU 16	-0.00426	0.00007	-0.00757	-0.0002	0.0051	-0.0003
49	SLU 17	-0.08892	0.00007	0.00185	-0.0002	0.0253	-0.0003
49	SLU 18	-0.11807	0.00007	0.00486	-0.0002	0.0324	-0.0003
49	SLU 19	-0.11807	0.00007	0.00486	-0.0002	0.0324	-0.0003
49	SLU 20	-0.00519	0.00007	-0.00771	-0.0002	0.0055	-0.0003
49	SLU 21	-0.08985	0.00008	0.00172	-0.0002	0.0257	-0.0003
49	SLU 22	-0.00613	0.00007	-0.00785	-0.0002	0.0059	-0.0003
49	SLU 23	-0.09079	0.00007	0.00158	-0.0002	0.026	-0.0003
49	SLU 24	-0.00613	0.00008	-0.00785	-0.0002	0.0059	-0.0003
49	SLU 25	-0.09079	0.00008	0.00158	-0.0002	0.026	-0.0003
49	SLU 26	-0.00426	0.00007	-0.00757	-0.0003	0.0051	-0.0006
49	SLU 27	-0.08892	0.00007	0.00185	-0.0003	0.0253	-0.0006
49	SLU 28	-0.00426	0.00007	-0.00757	-0.0003	0.0051	-0.0006
49	SLU 29	-0.08892	0.00007	0.00185	-0.0003	0.0253	-0.0006
49	SLU 30	-0.00519	0.00007	-0.00771	-0.0003	0.0055	-0.0006
49	SLU 31	-0.08985	0.00007	0.00172	-0.0003	0.0257	-0.0006
49	SLU 32	-0.00519	0.00007	-0.00771	-0.0003	0.0055	-0.0006
49	SLU 33	-0.08985	0.00007	0.00172	-0.0003	0.0257	-0.0006
49	SLU 34	-0.00426	0.00007	-0.00757	-0.0001	0.0051	-0.0001
49	SLU 35	-0.11714	0.00007	0.005	-0.0001	0.032	-0.0002
49	SLU 36	-0.11714	0.00007	0.005	-0.0001	0.032	-0.0002
49	SLU 37	-0.00426	0.00007	-0.00757	-0.0001	0.0051	-0.0001
49	SLU 38	-0.08892	0.00007	0.00185	-0.0001	0.0253	-0.0001
49	SLU 39	-0.11807	0.00007	0.00486	-0.0001	0.0324	-0.0002
49	SLU 40	-0.11807	0.00007	0.00486	-0.0001	0.0324	-0.0002
49	SLU 41	-0.00519	0.00008	-0.00771	-0.0001	0.0055	-0.0001
49	SLU 42	-0.08985	0.00008	0.00172	-0.0001	0.0257	-0.0001
49	SLU 43	-0.00613	0.00007	-0.00785	-0.0001	0.0059	-0.0002
49	SLU 44	-0.09079	0.00008	0.00158	-0.0001	0.026	-0.0002
49	SLU 45	-0.00613	0.00008	-0.00785	-0.0001	0.0059	-0.0001
49	SLU 46	-0.09079	0.00008	0.00158	-0.0001	0.026	-0.0002
49	SLU 47	-0.11714	0.00007	0.005	-0.0002	0.032	-0.0003
49	SLU 48	-0.11714	0.00007	0.005	-0.0002	0.032	-0.0003
49	SLU 49	-0.00426	0.00007	-0.00757	-0.0002	0.0051	-0.0003
49	SLU 50	-0.08892	0.00007	0.00185	-0.0002	0.0253	-0.0003
49	SLU 51	-0.11807	0.00007	0.00486	-0.0002	0.0324	-0.0003
49	SLU 52	-0.11807	0.00007	0.00486	-0.0002	0.0324	-0.0003
49	SLU 53	-0.00519	0.00007	-0.00771	-0.0002	0.0055	-0.0003
49	SLU 54	-0.08985	0.00008	0.00172	-0.0002	0.0257	-0.0003
49	SLU 55	-0.00613	0.00007	-0.00785	-0.0002	0.0059	-0.0003
49	SLU 56	-0.09079	0.00007	0.00158	-0.0002	0.026	-0.0003
49	SLU 57	-0.00613	0.00008	-0.00785	-0.0002	0.0059	-0.0003
49	SLU 58	-0.09079	0.00008	0.00158	-0.0002	0.026	-0.0003
49	SLU 59	-0.00426	0.00007	-0.00757	-0.0003	0.0051	-0.0006
49	SLU 60	-0.08892	0.00007	0.00185	-0.0003	0.0253	-0.0006
49	SLU 61	-0.00426	0.00007	-0.00757	-0.0003	0.0051	-0.0006
49	SLU 62	-0.08892	0.00007	0.00185	-0.0003	0.0253	-0.0006
49	SLU 63	-0.00519	0.00007	-0.00771	-0.0003	0.0055	-0.0006
49	SLU 64	-0.08985	0.00007	0.00172	-0.0003	0.0257	-0.0006
49	SLU 65	-0.00519	0.00007	-0.00771	-0.0003	0.0055	-0.0006
49	SLU 66	-0.08985	0.00007	0.00172	-0.0003	0.0257	-0.0006
49	SLU 67	-0.00553	0.00009	-0.00985	-0.0001	0.0066	-0.0002
49	SLU 68	-0.11841	0.00009	0.00272	-0.0001	0.0335	-0.0002
49	SLU 69	-0.11841	0.00009	0.00272	-0.0001	0.0335	-0.0002
49	SLU 70	-0.00553	0.00009	-0.00985	-0.0001	0.0066	-0.0002
49	SLU 71	-0.09019	0.00009	-0.00042	-0.0001	0.0268	-0.0002
49	SLU 72	-0.11935	0.00009	0.00259	-0.0002	0.0339	-0.0002
49	SLU 73	-0.11935	0.00009	0.00259	-0.0001	0.0339	-0.0002
49	SLU 74	-0.00647	0.0001	-0.00998	-0.0001	0.007	-0.0002
49	SLU 75	-0.09113	0.0001	-0.00055	-0.0001	0.0272	-0.0002
49	SLU 76	-0.0074	0.0001	-0.01012	-0.0001	0.0074	-0.0002
49	SLU 77	-0.09207	0.0001	-0.00069	-0.0002	0.0276	-0.0002
49	SLU 78	-0.0074	0.0001	-0.01012	-0.0001	0.0074	-0.0002
49	SLU 79	-0.09207	0.0001	-0.00069	-0.0001	0.0276	-0.0002
49	SLU 80	-0.11841	0.00009	0.00272	-0.0002	0.0335	-0.0004
49	SLU 81	-0.11841	0.00009	0.00272	-0.0002	0.0335	-0.0004
49	SLU 82	-0.00553	0.00009	-0.00985	-0.0002	0.0066	-0.0003
49	SLU 83	-0.09019	0.00009	-0.00042	-0.0002	0.0268	-0.0003
49	SLU 84	-0.11935	0.00009	0.00259	-0.0002	0.0339	-0.0004
49	SLU 85	-0.11935	0.00009	0.00259	-0.0002	0.0339	-0.0004
49	SLU 86	-0.00647	0.0001	-0.00998	-0.0002	0.007	-0.0003
49	SLU 87	-0.09113	0.0001	-0.00055	-0.0002	0.0272	-0.0004
49	SLU 88	-0.0074	0.00009	-0.01012	-0.0002	0.0074	-0.0004
49	SLU 89	-0.09207	0.0001	-0.00069	-0.0002	0.0276	-0.0004
49	SLU 90	-0.0074	0.0001	-0.01012	-0.0002	0.0074	-0.0004
49	SLU 91	-0.09207	0.0001	-0.00069	-0.0002	0.0276	-0.0004
49	SLU 92	-0.00553	0.00009	-0.00985	-0.0003	0.0066	-0.0006
49	SLU 93	-0.09019	0.00009	-0.00042	-0.0003	0.0268	-0.0006
49	SLU 94	-0.00553	0.00009	-0.00985	-0.0003	0.0066	-0.0006
49	SLU 95	-0.09019	0.00009	-0.00042	-0.0003	0.0268	-0.0006
49	SLU 96	-0.00647	0.00009	-0.00998	-0.0003	0.007	-0.0006
49	SLU 97	-0.09113	0.00009	-0.00055	-0.0003	0.0272	-0.0006
49	SLU 98	-0.00647	0.00009	-0.00998	-0.0003	0.007	-0.0006
49	SLU 99	-0.09113	0.00009	-0.00055	-0.0003	0.0272	-0.0006
49	SLU 100	-0.00553	0.00009	-0.00985	-0.0001	0.0066	-0.0002
49	SLU 101	-0.11841	0.00009	0.00272	-0.0001	0.0335	-0.0002
49	SLU 102	-0.11841	0.00009	0.00272	-0.0001	0.0335	-0.0002
49	SLU 103	-0.00553	0.00009	-0.00985	-0.0001	0.0066	-0.0002
49	SLU 104	-0.09019	0.00009	-0.00042	-0.0001	0.0268	-0.0002
49	SLU 105	-0.11935	0.00009	0.00259	-0.0002	0.0339	-0.0002
49	SLU 106	-0.11935	0.00009	0.00259	-0.0001	0.0339	-0.0002
49	SLU 107	-0.00647	0.0001	-0.00998	-0.0001	0.007	-0.0002
49	SLU 108	-0.09113	0.0001	-0.00055	-0.0001	0.0272	-0.0002
49	SLU 109	-0.0074	0.0001	-0.01012	-0.0001	0.0074	-0.0002

Nodo	Cont.	Spostamento			Rotazione		
Ind.	N.br.	ux	uy	uz	rx	ry	rz
49	SLU 110	-0.09207	0.0001	-0.00069	-0.0002	0.0276	-0.0002
49	SLU 111	-0.0074	0.0001	-0.01012	-0.0001	0.0074	-0.0002
49	SLU 112	-0.09207	0.0001	-0.00069	-0.0001	0.0276	-0.0002
49	SLU 113	-0.11841	0.00009	0.00272	-0.0002	0.0335	-0.0004
49	SLU 114	-0.11841	0.00009	0.00272	-0.0002	0.0335	-0.0004
49	SLU 115	-0.00553	0.00009	-0.00985	-0.0002	0.0066	-0.0003
49	SLU 116	-0.09019	0.00009	-0.00042	-0.0002	0.0268	-0.0003
49	SLU 117	-0.11935	0.00009	0.00259	-0.0002	0.0339	-0.0004
49	SLU 118	-0.11935	0.00009	0.00259	-0.0002	0.0339	-0.0004
49	SLU 119	-0.00647	0.0001	-0.00998	-0.0002	0.007	-0.0003
49	SLU 120	-0.09113	0.0001	-0.00055	-0.0002	0.0272	-0.0004
49	SLU 121	-0.0074	0.00009	-0.01012	-0.0002	0.0074	-0.0004
49	SLU 122	-0.09207	0.0001	-0.00069	-0.0002	0.0276	-0.0004
49	SLU 123	-0.0074	0.0001	-0.01012	-0.0002	0.0074	-0.0004
49	SLU 124	-0.09207	0.0001	-0.00069	-0.0002	0.0276	-0.0004
49	SLU 125	-0.00553	0.00009	-0.00985	-0.0003	0.0066	-0.0006
49	SLU 126	-0.09019	0.00009	-0.00042	-0.0003	0.0268	-0.0006
49	SLU 127	-0.00553	0.00009	-0.00985	-0.0003	0.0066	-0.0006
49	SLU 128	-0.09019	0.00009	-0.00042	-0.0003	0.0268	-0.0006
49	SLU 129	-0.00647	0.00009	-0.00998	-0.0003	0.007	-0.0006
49	SLU 130	-0.09113	0.00009	-0.00055	-0.0003	0.0272	-0.0006
49	SLU 131	-0.00647	0.00009	-0.00998	-0.0003	0.007	-0.0006
49	SLU 132	-0.09113	0.00009	-0.00055	-0.0003	0.0272	-0.0006
49	SLE RA 1	-0.00426	0.00007	-0.00757	-0.0001	0.0051	-0.0001
49	SLE RA 2	-0.07951	0.00007	0.00081	-0.0001	0.023	-0.0002
49	SLE RA 3	-0.07951	0.00007	0.00081	-0.0001	0.023	-0.0002
49	SLE RA 4	-0.00426	0.00007	-0.00757	-0.0001	0.0051	-0.0001
49	SLE RA 5	-0.0607	0.00007	-0.00129	-0.0001	0.0186	-0.0001
49	SLE RA 6	-0.08013	0.00007	0.00072	-0.0001	0.0233	-0.0002
49	SLE RA 7	-0.08013	0.00007	0.00072	-0.0001	0.0233	-0.0002
49	SLE RA 8	-0.00488	0.00007	-0.00766	-0.0001	0.0054	-0.0001
49	SLE RA 9	-0.06132	0.00007	-0.00138	-0.0001	0.0188	-0.0001
49	SLE RA 10	-0.0055	0.00007	-0.00775	-0.0001	0.0056	-0.0002
49	SLE RA 11	-0.06194	0.00007	-0.00147	-0.0001	0.0191	-0.0002
49	SLE RA 12	-0.0055	0.00007	-0.00775	-0.0001	0.0056	-0.0001
49	SLE RA 13	-0.06194	0.00007	-0.00147	-0.0001	0.0191	-0.0002
49	SLE RA 14	-0.07951	0.00007	0.00081	-0.0002	0.023	-0.0003
49	SLE RA 15	-0.07951	0.00007	0.00081	-0.0002	0.023	-0.0003
49	SLE RA 16	-0.00426	0.00007	-0.00757	-0.0001	0.0051	-0.0002
49	SLE RA 17	-0.0607	0.00007	-0.00129	-0.0001	0.0186	-0.0003
49	SLE RA 18	-0.08013	0.00007	0.00072	-0.0002	0.0233	-0.0003
49	SLE RA 19	-0.08013	0.00007	0.00072	-0.0002	0.0233	-0.0003
49	SLE RA 20	-0.00488	0.00007	-0.00766	-0.0001	0.0054	-0.0002
49	SLE RA 21	-0.06132	0.00007	-0.00138	-0.0002	0.0188	-0.0003
49	SLE RA 22	-0.0055	0.00007	-0.00775	-0.0002	0.0056	-0.0003
49	SLE RA 23	-0.06194	0.00007	-0.00147	-0.0002	0.0191	-0.0003
49	SLE RA 24	-0.0055	0.00007	-0.00775	-0.0001	0.0056	-0.0003
49	SLE RA 25	-0.06194	0.00007	-0.00147	-0.0002	0.0191	-0.0003
49	SLE RA 26	-0.00426	0.00007	-0.00757	-0.0002	0.0051	-0.0004
49	SLE RA 27	-0.0607	0.00007	-0.00129	-0.0002	0.0186	-0.0004
49	SLE RA 28	-0.00426	0.00007	-0.00757	-0.0002	0.0051	-0.0004
49	SLE RA 29	-0.0607	0.00007	-0.00129	-0.0002	0.0186	-0.0004
49	SLE RA 30	-0.00488	0.00007	-0.00766	-0.0002	0.0054	-0.0004
49	SLE RA 31	-0.06132	0.00007	-0.00138	-0.0002	0.0188	-0.0004
49	SLE RA 32	-0.00488	0.00007	-0.00766	-0.0002	0.0054	-0.0004
49	SLE RA 33	-0.06132	0.00007	-0.00138	-0.0002	0.0188	-0.0004
49	SLE FR 1	-0.00426	0.00007	-0.00757	-0.0001	0.0051	-0.0001
49	SLE FR 2	-0.0607	0.00007	-0.00129	-0.0001	0.0186	-0.0002
49	SLE FR 3	-0.00426	0.00007	-0.00757	-0.0001	0.0051	-0.0001
49	SLE FR 4	-0.00451	0.00007	-0.00761	-0.0001	0.0052	-0.0001
49	SLE FR 5	-0.00426	0.00007	-0.00757	-0.0001	0.0051	-0.0003
49	SLE QP 1	-0.00426	0.00007	-0.00757	-0.0001	0.0051	-0.0001
49	SLO 1	-0.01426	-0.00017	-0.00322	-0.1096	0.0017	-0.2623
49	SLO 2	-0.01426	-0.00017	-0.00322	-0.1096	0.0017	-0.2623
49	SLO 3	-0.01426	0.0003	-0.00322	0.1094	0.0017	0.262
49	SLO 4	-0.01426	0.0003	-0.00322	0.1094	0.0017	0.262
49	SLO 5	-0.00726	-0.00071	-0.00627	-0.3652	0.0041	-0.8741
49	SLO 6	-0.00726	-0.00071	-0.00627	-0.3652	0.0041	-0.8741
49	SLO 7	-0.00726	0.00085	-0.00627	0.365	0.0041	0.8738
49	SLO 8	-0.00726	0.00085	-0.00627	0.365	0.0041	0.8738
49	SLO 9	-0.00126	-0.00071	-0.00888	-0.3652	0.0061	-0.8741
49	SLO 10	-0.00126	-0.00071	-0.00888	-0.3652	0.0061	-0.8741
49	SLO 11	-0.00126	0.00085	-0.00888	0.365	0.0061	0.8738
49	SLO 12	-0.00126	0.00085	-0.00888	0.365	0.0061	0.8738
49	SLO 13	0.00575	-0.00016	-0.01193	-0.1096	0.0086	-0.2623
49	SLO 14	0.00575	-0.00016	-0.01193	-0.1096	0.0086	-0.2623
49	SLO 15	0.00575	0.0003	-0.01193	0.1094	0.0086	0.262
49	SLO 16	0.00575	0.0003	-0.01193	0.1094	0.0086	0.262
49	SLD 1	-0.01248	-0.00015	-0.00399	-0.1013	0.0023	-0.2424
49	SLD 2	-0.01248	-0.00015	-0.00399	-0.1013	0.0023	-0.2424
49	SLD 3	-0.01248	0.00029	-0.00399	0.1011	0.0023	0.2421
49	SLD 4	-0.01248	0.00029	-0.00399	0.1011	0.0023	0.2421
49	SLD 5	-0.00672	-0.00065	-0.0065	-0.3375	0.0043	-0.8076
49	SLD 6	-0.00672	-0.00065	-0.0065	-0.3375	0.0043	-0.8076
49	SLD 7	-0.00672	0.00079	-0.0065	0.3373	0.0043	0.8073
49	SLD 8	-0.00672	0.00079	-0.0065	0.3373	0.0043	0.8073
49	SLD 9	-0.00179	-0.00065	-0.00865	-0.3375	0.006	-0.8076
49	SLD 10	-0.00179	-0.00065	-0.00865	-0.3375	0.006	-0.8076
49	SLD 11	-0.00179	0.00079	-0.00865	0.3373	0.006	0.8073
49	SLD 12	-0.00179	0.00079	-0.00865	0.3373	0.006	0.8073
49	SLD 13	0.00397	-0.00015	-0.01116	-0.1013	0.0079	-0.2424
49	SLD 14	0.00397	-0.00015	-0.01116	-0.1013	0.0079	-0.2424
49	SLD 15	0.00397	0.00029	-0.01116	0.1011	0.0079	0.2421
49	SLD 16	0.00397	0.00029	-0.01116	0.1011	0.0079	0.2421
49	SLV 1	-0.02198	-0.0005	0.00014	-0.267	-0.001	-0.6391

Nodo	Cont.	Spostamento			Rotazione		
Ind.	N.br.	ux	uy	uz	rx	ry	rz
49	SLV 2	-0.02198	-0.0005	0.00014	-0.267	-0.001	-0.6391
49	SLV 3	-0.02198	0.00064	0.00014	0.2668	-0.001	0.6388
49	SLV 4	-0.02198	0.00064	0.00014	0.2668	-0.001	0.6388
49	SLV 5	-0.00957	-0.00184	-0.00526	-0.8899	0.0033	-2.1299
49	SLV 6	-0.00957	-0.00184	-0.00526	-0.8899	0.0033	-2.1299
49	SLV 7	-0.00957	0.00197	-0.00526	0.8897	0.0033	2.1296
49	SLV 8	-0.00957	0.00197	-0.00526	0.8897	0.0033	2.1296
49	SLV 9	0.00106	-0.00183	-0.00989	-0.8899	0.0069	-2.1299
49	SLV 10	0.00106	-0.00183	-0.00989	-0.8899	0.0069	-2.1299
49	SLV 11	0.00106	0.00197	-0.00989	0.8897	0.0069	2.1296
49	SLV 12	0.00106	0.00197	-0.00989	0.8897	0.0069	2.1296
49	SLV 13	0.01346	-0.0005	-0.01529	-0.267	0.0112	-0.6391
49	SLV 14	0.01346	-0.0005	-0.01529	-0.267	0.0112	-0.6391
49	SLV 15	0.01346	0.00064	-0.01529	0.2668	0.0112	0.6388
49	SLV 16	0.01346	0.00064	-0.01529	0.2668	0.0112	0.6388
50	SLU 1	-0.00139	0.00004	-0.02369	0	0.0081	0
50	SLU 2	-0.07432	0.00003	-0.16034	0	0.1047	0
50	SLU 3	-0.07432	0.00003	-0.16034	0	0.1047	0
50	SLU 4	-0.00139	0.00005	-0.02369	0	0.0081	0
50	SLU 5	-0.05609	0.00004	-0.12618	0	0.0806	0
50	SLU 6	-0.07485	0.00003	-0.16201	0	0.1056	0
50	SLU 7	-0.07485	0.00003	-0.16201	0	0.1056	0
50	SLU 8	-0.00193	0.00005	-0.02537	0	0.009	0
50	SLU 9	-0.05662	0.00004	-0.12785	0	0.0814	0
50	SLU 10	-0.00246	0.00004	-0.02704	0	0.0099	0
50	SLU 11	-0.05715	0.00004	-0.12953	0	0.0823	0
50	SLU 12	-0.00246	0.00004	-0.02704	0	0.0099	0
50	SLU 13	-0.05715	0.00004	-0.12953	0	0.0823	0
50	SLU 14	-0.07432	0.00001	-0.16034	0.0001	0.1047	0
50	SLU 15	-0.07432	0.00001	-0.16034	0.0001	0.1047	0
50	SLU 16	-0.00139	0.00003	-0.02369	0.0001	0.0081	0
50	SLU 17	-0.05609	0.00002	-0.12618	0	0.0806	0
50	SLU 18	-0.07485	0.00001	-0.16201	0.0001	0.1056	0
50	SLU 19	-0.07485	0.00001	-0.16201	0.0001	0.1056	0
50	SLU 20	-0.00193	0.00003	-0.02537	0.0001	0.009	0
50	SLU 21	-0.05662	0.00002	-0.12785	0	0.0814	0
50	SLU 22	-0.00246	0.00002	-0.02704	0.0001	0.0099	0
50	SLU 23	-0.05715	0.00002	-0.12953	0.0001	0.0823	0
50	SLU 24	-0.00246	0.00003	-0.02704	0.0001	0.0099	0
50	SLU 25	-0.05715	0.00002	-0.12953	0.0001	0.0823	0
50	SLU 26	-0.00139	-0.00001	-0.02369	0.0002	0.0081	0
50	SLU 27	-0.05609	-0.00002	-0.12618	0.0002	0.0806	0
50	SLU 28	-0.00139	-0.00001	-0.02369	0.0002	0.0081	0
50	SLU 29	-0.05609	-0.00001	-0.12618	0.0002	0.0806	0
50	SLU 30	-0.00193	-0.00001	-0.02537	0.0002	0.009	0
50	SLU 31	-0.05662	-0.00001	-0.12785	0.0002	0.0814	0
50	SLU 32	-0.00193	0	-0.02537	0.0002	0.009	0
50	SLU 33	-0.05662	-0.00001	-0.12785	0.0002	0.0814	0
50	SLU 34	-0.00139	0.00004	-0.02369	0	0.0081	0
50	SLU 35	-0.07432	0.00003	-0.16034	0	0.1047	0
50	SLU 36	-0.07432	0.00003	-0.16034	0	0.1047	0
50	SLU 37	-0.00139	0.00005	-0.02369	0	0.0081	0
50	SLU 38	-0.05609	0.00004	-0.12618	0	0.0806	0
50	SLU 39	-0.07485	0.00003	-0.16201	0	0.1056	0
50	SLU 40	-0.07485	0.00003	-0.16201	0	0.1056	0
50	SLU 41	-0.00193	0.00005	-0.02537	0	0.009	0
50	SLU 42	-0.05662	0.00004	-0.12785	0	0.0814	0
50	SLU 43	-0.00246	0.00004	-0.02704	0	0.0099	0
50	SLU 44	-0.05715	0.00004	-0.12953	0	0.0823	0
50	SLU 45	-0.00246	0.00004	-0.02704	0	0.0099	0
50	SLU 46	-0.05715	0.00004	-0.12953	0	0.0823	0
50	SLU 47	-0.07432	0.00001	-0.16034	0.0001	0.1047	0
50	SLU 48	-0.07432	0.00001	-0.16034	0.0001	0.1047	0
50	SLU 49	-0.00139	0.00003	-0.02369	0.0001	0.0081	0
50	SLU 50	-0.05609	0.00002	-0.12618	0	0.0806	0
50	SLU 51	-0.07485	0.00001	-0.16201	0.0001	0.1056	0
50	SLU 52	-0.07485	0.00001	-0.16201	0.0001	0.1056	0
50	SLU 53	-0.00193	0.00003	-0.02537	0.0001	0.009	0
50	SLU 54	-0.05662	0.00002	-0.12785	0	0.0814	0
50	SLU 55	-0.00246	0.00002	-0.02704	0.0001	0.0099	0
50	SLU 56	-0.05715	0.00002	-0.12953	0.0001	0.0823	0
50	SLU 57	-0.00246	0.00003	-0.02704	0.0001	0.0099	0
50	SLU 58	-0.05715	0.00002	-0.12953	0.0001	0.0823	0
50	SLU 59	-0.00139	-0.00001	-0.02369	0.0002	0.0081	0
50	SLU 60	-0.05609	-0.00002	-0.12618	0.0002	0.0806	0
50	SLU 61	-0.00139	-0.00001	-0.02369	0.0002	0.0081	0
50	SLU 62	-0.05609	-0.00001	-0.12618	0.0002	0.0806	0
50	SLU 63	-0.00193	-0.00001	-0.02537	0.0002	0.009	0
50	SLU 64	-0.05662	-0.00001	-0.12785	0.0002	0.0814	0
50	SLU 65	-0.00193	0	-0.02537	0.0002	0.009	0
50	SLU 66	-0.05662	-0.00001	-0.12785	0.0002	0.0814	0
50	SLU 67	-0.00181	0.00005	-0.0308	0	0.0106	0
50	SLU 68	-0.07473	0.00004	-0.16745	0	0.1072	0
50	SLU 69	-0.07473	0.00004	-0.16745	0	0.1072	0
50	SLU 70	-0.00181	0.00006	-0.0308	0	0.0106	0
50	SLU 71	-0.0565	0.00005	-0.13328	0	0.083	0
50	SLU 72	-0.07527	0.00004	-0.16912	0	0.108	0
50	SLU 73	-0.07527	0.00005	-0.16912	0	0.108	0
50	SLU 74	-0.00234	0.00006	-0.03247	0	0.0114	0
50	SLU 75	-0.05704	0.00005	-0.13496	0	0.0839	0
50	SLU 76	-0.00287	0.00005	-0.03415	0	0.0123	0
50	SLU 77	-0.05757	0.00005	-0.13664	0	0.0848	0
50	SLU 78	-0.00287	0.00006	-0.03415	0	0.0123	0
50	SLU 79	-0.05757	0.00005	-0.13664	0	0.0848	0
50	SLU 80	-0.07473	0.00002	-0.16745	0.0001	0.1072	0

Nodo	Cont.	Spostamento			Rotazione		
Ind.	N.br.	ux	uy	uz	rx	ry	rz
50	SLU 81	-0.07473	0.00003	-0.16745	0.0001	0.1072	0
50	SLU 82	-0.00181	0.00004	-0.0308	0.0001	0.0106	0
50	SLU 83	-0.0565	0.00003	-0.13328	0.0001	0.083	0
50	SLU 84	-0.07527	0.00002	-0.16912	0.0001	0.108	0
50	SLU 85	-0.07527	0.00003	-0.16912	0.0001	0.108	0
50	SLU 86	-0.00234	0.00004	-0.03247	0.0001	0.0114	0
50	SLU 87	-0.05704	0.00003	-0.13496	0.0001	0.0839	0
50	SLU 88	-0.00287	0.00003	-0.03415	0.0001	0.0123	0
50	SLU 89	-0.05757	0.00003	-0.13664	0.0001	0.0848	0
50	SLU 90	-0.00287	0.00004	-0.03415	0.0001	0.0123	0
50	SLU 91	-0.05757	0.00003	-0.13664	0.0001	0.0848	0
50	SLU 92	-0.00181	0	-0.0308	0.0002	0.0106	0
50	SLU 93	-0.0565	0	-0.13328	0.0002	0.083	0
50	SLU 94	-0.00181	0.00001	-0.0308	0.0002	0.0106	0
50	SLU 95	-0.0565	0	-0.13328	0.0002	0.083	0
50	SLU 96	-0.00234	0	-0.03247	0.0002	0.0114	0
50	SLU 97	-0.05704	0	-0.13496	0.0002	0.0839	0
50	SLU 98	-0.00234	0.00001	-0.03247	0.0002	0.0114	0
50	SLU 99	-0.05704	0	-0.13496	0.0002	0.0839	0
50	SLU 100	-0.00181	0.00005	-0.0308	0	0.0106	0
50	SLU 101	-0.07473	0.00004	-0.16745	0	0.1072	0
50	SLU 102	-0.07473	0.00004	-0.16745	0	0.1072	0
50	SLU 103	-0.00181	0.00006	-0.0308	0	0.0106	0
50	SLU 104	-0.0565	0.00005	-0.13328	0	0.083	0
50	SLU 105	-0.07527	0.00004	-0.16912	0	0.108	0
50	SLU 106	-0.07527	0.00005	-0.16912	0	0.108	0
50	SLU 107	-0.00234	0.00006	-0.03247	0	0.0114	0
50	SLU 108	-0.05704	0.00005	-0.13496	0	0.0839	0
50	SLU 109	-0.00287	0.00005	-0.03415	0	0.0123	0
50	SLU 110	-0.05757	0.00005	-0.13664	0	0.0848	0
50	SLU 111	-0.00287	0.00006	-0.03415	0	0.0123	0
50	SLU 112	-0.05757	0.00005	-0.13664	0	0.0848	0
50	SLU 113	-0.07473	0.00002	-0.16745	0.0001	0.1072	0
50	SLU 114	-0.07473	0.00003	-0.16745	0.0001	0.1072	0
50	SLU 115	-0.00181	0.00004	-0.0308	0.0001	0.0106	0
50	SLU 116	-0.0565	0.00003	-0.13328	0.0001	0.083	0
50	SLU 117	-0.07527	0.00002	-0.16912	0.0001	0.108	0
50	SLU 118	-0.07527	0.00003	-0.16912	0.0001	0.108	0
50	SLU 119	-0.00234	0.00004	-0.03247	0.0001	0.0114	0
50	SLU 120	-0.05704	0.00003	-0.13496	0.0001	0.0839	0
50	SLU 121	-0.00287	0.00003	-0.03415	0.0001	0.0123	0
50	SLU 122	-0.05757	0.00003	-0.13664	0.0001	0.0848	0
50	SLU 123	-0.00287	0.00004	-0.03415	0.0001	0.0123	0
50	SLU 124	-0.05757	0.00003	-0.13664	0.0001	0.0848	0
50	SLU 125	-0.00181	0	-0.0308	0.0002	0.0106	0
50	SLU 126	-0.0565	0	-0.13328	0.0002	0.083	0
50	SLU 127	-0.00181	0.00001	-0.0308	0.0002	0.0106	0
50	SLU 128	-0.0565	0	-0.13328	0.0002	0.083	0
50	SLU 129	-0.00234	0	-0.03247	0.0002	0.0114	0
50	SLU 130	-0.05704	0	-0.13496	0.0002	0.0839	0
50	SLU 131	-0.00234	0.00001	-0.03247	0.0002	0.0114	0
50	SLU 132	-0.05704	0	-0.13496	0.0002	0.0839	0
50	SLE RA 1	-0.00139	0.00004	-0.02369	0	0.0081	0
50	SLE RA 2	-0.05001	0.00003	-0.11479	0	0.0725	0
50	SLE RA 3	-0.05001	0.00003	-0.11479	0	0.0725	0
50	SLE RA 4	-0.00139	0.00004	-0.02369	0	0.0081	0
50	SLE RA 5	-0.03786	0.00004	-0.09202	0	0.0564	0
50	SLE RA 6	-0.05036	0.00003	-0.11591	0	0.0731	0
50	SLE RA 7	-0.05036	0.00004	-0.11591	0	0.0731	0
50	SLE RA 8	-0.00175	0.00004	-0.02481	0	0.0087	0
50	SLE RA 9	-0.03821	0.00004	-0.09313	0	0.057	0
50	SLE RA 10	-0.0021	0.00004	-0.02593	0	0.0093	0
50	SLE RA 11	-0.03856	0.00004	-0.09425	0	0.0576	0
50	SLE RA 12	-0.0021	0.00004	-0.02593	0	0.0093	0
50	SLE RA 13	-0.03856	0.00004	-0.09425	0	0.0576	0
50	SLE RA 14	-0.05001	0.00002	-0.11479	0	0.0725	0
50	SLE RA 15	-0.05001	0.00002	-0.11479	0	0.0725	0
50	SLE RA 16	-0.00139	0.00003	-0.02369	0	0.0081	0
50	SLE RA 17	-0.03786	0.00003	-0.09202	0	0.0564	0
50	SLE RA 18	-0.05036	0.00002	-0.11591	0	0.0731	0
50	SLE RA 19	-0.05036	0.00002	-0.11591	0	0.0731	0
50	SLE RA 20	-0.00175	0.00003	-0.02481	0	0.0087	0
50	SLE RA 21	-0.03821	0.00003	-0.09313	0	0.057	0
50	SLE RA 22	-0.0021	0.00003	-0.02593	0.0001	0.0093	0
50	SLE RA 23	-0.03856	0.00002	-0.09425	0	0.0576	0
50	SLE RA 24	-0.0021	0.00003	-0.02593	0	0.0093	0
50	SLE RA 25	-0.03856	0.00003	-0.09425	0	0.0576	0
50	SLE RA 26	-0.00139	0.00001	-0.02369	0.0001	0.0081	0
50	SLE RA 27	-0.03786	0	-0.09202	0.0001	0.0564	0
50	SLE RA 28	-0.00139	0.00001	-0.02369	0.0001	0.0081	0
50	SLE RA 29	-0.03786	0	-0.09202	0.0001	0.0564	0
50	SLE RA 30	-0.00175	0.00001	-0.02481	0.0001	0.0087	0
50	SLE RA 31	-0.03821	0	-0.09313	0.0001	0.057	0
50	SLE RA 32	-0.00175	0.00001	-0.02481	0.0001	0.0087	0
50	SLE RA 33	-0.03821	0.00001	-0.09313	0.0001	0.057	0
50	SLE FR 1	-0.00139	0.00004	-0.02369	0	0.0081	0
50	SLE FR 2	-0.03786	0.00003	-0.09202	0	0.0564	0
50	SLE FR 3	-0.00139	0.00004	-0.02369	0	0.0081	0
50	SLE FR 4	-0.00154	0.00004	-0.02414	0	0.0084	0
50	SLE FR 5	-0.00139	0.00003	-0.02369	0.0001	0.0081	0
50	SLE QP 1	-0.00139	0.00004	-0.02369	0	0.0081	0
50	SLO 1	-0.01103	-0.00221	-0.01518	0.2299	0.0091	-0.0024
50	SLO 2	-0.01103	-0.00221	-0.01518	0.2299	0.0091	-0.0024
50	SLO 3	-0.01103	0.00229	-0.01518	-0.2299	0.0091	0.0023
50	SLO 4	-0.01103	0.00229	-0.01518	-0.2299	0.0091	0.0023

Nodo	Cont.	Spostamento			Rotazione		
Ind.	N.br.	ux	uy	uz	rx	ry	rz
50	SLO 5	-0.00429	-0.00745	-0.02114	0.7662	0.0084	-0.0079
50	SLO 6	-0.00429	-0.00745	-0.02114	0.7662	0.0084	-0.0079
50	SLO 7	-0.00429	0.00753	-0.02114	-0.7662	0.0084	0.0079
50	SLO 8	-0.00429	0.00753	-0.02114	-0.7662	0.0084	0.0079
50	SLO 9	0.0015	-0.00745	-0.02624	0.7662	0.0078	-0.0079
50	SLO 10	0.0015	-0.00745	-0.02624	0.7662	0.0078	-0.0079
50	SLO 11	0.0015	0.00753	-0.02624	-0.7662	0.0078	0.0079
50	SLO 12	0.0015	0.00753	-0.02624	-0.7662	0.0078	0.0079
50	SLO 13	0.00825	-0.00221	-0.0322	0.2299	0.0072	-0.0024
50	SLO 14	0.00825	-0.00221	-0.0322	0.2299	0.0072	-0.0024
50	SLO 15	0.00825	0.00229	-0.0322	-0.2299	0.0072	0.0023
50	SLO 16	0.00825	0.00229	-0.0322	-0.2299	0.0072	0.0023
50	SLD 1	-0.00932	-0.00204	-0.0167	0.2124	0.0089	-0.0022
50	SLD 2	-0.00932	-0.00204	-0.0167	0.2124	0.0089	-0.0022
50	SLD 3	-0.00932	0.00212	-0.0167	-0.2124	0.0089	0.0022
50	SLD 4	-0.00932	0.00212	-0.0167	-0.2124	0.0089	0.0022
50	SLD 5	-0.00377	-0.00688	-0.02159	0.708	0.0084	-0.0073
50	SLD 6	-0.00377	-0.00688	-0.02159	0.708	0.0084	-0.0073
50	SLD 7	-0.00377	0.00696	-0.02159	-0.708	0.0084	0.0073
50	SLD 8	-0.00377	0.00696	-0.02159	-0.708	0.0084	0.0073
50	SLD 9	0.00098	-0.00688	-0.02579	0.708	0.0079	-0.0073
50	SLD 10	0.00098	-0.00688	-0.02579	0.708	0.0079	-0.0073
50	SLD 11	0.00098	0.00696	-0.02579	-0.708	0.0079	0.0073
50	SLD 12	0.00098	0.00696	-0.02579	-0.708	0.0079	0.0073
50	SLD 13	0.00653	-0.00204	-0.03069	0.2124	0.0073	-0.0022
50	SLD 14	0.00653	-0.00204	-0.03069	0.2124	0.0073	-0.0022
50	SLD 15	0.00653	0.00212	-0.03069	-0.2124	0.0073	0.0022
50	SLD 16	0.00653	0.00212	-0.03069	-0.2124	0.0073	0.0022
50	SLV 1	-0.01847	-0.00544	-0.00862	0.5602	0.0098	-0.0058
50	SLV 2	-0.01847	-0.00544	-0.00862	0.5602	0.0098	-0.0058
50	SLV 3	-0.01847	0.00551	-0.00862	-0.5602	0.0098	0.0057
50	SLV 4	-0.01847	0.00551	-0.00862	-0.5602	0.0098	0.0057
50	SLV 5	-0.00652	-0.01821	-0.01917	1.8673	0.0086	-0.0192
50	SLV 6	-0.00652	-0.01821	-0.01917	1.8673	0.0086	-0.0192
50	SLV 7	-0.00652	0.01829	-0.01917	-1.8673	0.0086	0.0192
50	SLV 8	-0.00652	0.01829	-0.01917	-1.8673	0.0086	0.0192
50	SLV 9	0.00373	-0.01821	-0.02821	1.8673	0.0076	-0.0192
50	SLV 10	0.00373	-0.01821	-0.02821	1.8673	0.0076	-0.0192
50	SLV 11	0.00373	0.01829	-0.02821	-1.8673	0.0076	0.0192
50	SLV 12	0.00373	0.01829	-0.02821	-1.8673	0.0076	0.0192
50	SLV 13	0.01568	-0.00544	-0.03877	0.5602	0.0064	-0.0058
50	SLV 14	0.01568	-0.00544	-0.03877	0.5602	0.0064	-0.0058
50	SLV 15	0.01568	0.00551	-0.03877	-0.5602	0.0064	0.0057
50	SLV 16	0.01568	0.00551	-0.03877	-0.5602	0.0064	0.0057
51	SLU 1	0.00139	0.00004	-0.02369	0	-0.0081	0
51	SLU 2	0.07432	0.00003	-0.16034	0	-0.1047	0
51	SLU 3	0.07432	0.00003	-0.16034	0	-0.1047	0
51	SLU 4	0.00139	0.00005	-0.02369	0	-0.0081	0
51	SLU 5	0.05609	0.00004	-0.12618	0	-0.0806	0
51	SLU 6	0.07485	0.00003	-0.16201	0	-0.1056	0
51	SLU 7	0.07485	0.00003	-0.16201	0	-0.1056	0
51	SLU 8	0.00193	0.00005	-0.02537	0	-0.009	0
51	SLU 9	0.05662	0.00004	-0.12785	0	-0.0814	0
51	SLU 10	0.00246	0.00004	-0.02704	0	-0.0099	0
51	SLU 11	0.05715	0.00004	-0.12953	0	-0.0823	0
51	SLU 12	0.00246	0.00004	-0.02704	0	-0.0099	0
51	SLU 13	0.05715	0.00004	-0.12953	0	-0.0823	0
51	SLU 14	0.07432	0.00001	-0.16034	0.0001	-0.1047	0
51	SLU 15	0.07432	0.00001	-0.16034	0.0001	-0.1047	0
51	SLU 16	0.00139	0.00003	-0.02369	0.0001	-0.0081	0
51	SLU 17	0.05609	0.00002	-0.12618	0	-0.0806	0
51	SLU 18	0.07485	0.00001	-0.16201	0.0001	-0.1056	0
51	SLU 19	0.07485	0.00001	-0.16201	0.0001	-0.1056	0
51	SLU 20	0.00193	0.00003	-0.02537	0.0001	-0.009	0
51	SLU 21	0.05662	0.00002	-0.12785	0	-0.0814	0
51	SLU 22	0.00246	0.00002	-0.02704	0.0001	-0.0099	0
51	SLU 23	0.05715	0.00002	-0.12953	0.0001	-0.0823	0
51	SLU 24	0.00246	0.00003	-0.02704	0.0001	-0.0099	0
51	SLU 25	0.05715	0.00002	-0.12953	0.0001	-0.0823	0
51	SLU 26	0.00139	-0.00001	-0.02369	0.0002	-0.0081	0
51	SLU 27	0.05609	-0.00002	-0.12618	0.0002	-0.0806	0
51	SLU 28	0.00139	-0.00001	-0.02369	0.0002	-0.0081	0
51	SLU 29	0.05609	-0.00001	-0.12618	0.0002	-0.0806	0
51	SLU 30	0.00193	-0.00001	-0.02537	0.0002	-0.009	0
51	SLU 31	0.05662	-0.00001	-0.12785	0.0002	-0.0814	0
51	SLU 32	0.00193	0	-0.02537	0.0002	-0.009	0
51	SLU 33	0.05662	-0.00001	-0.12785	0.0002	-0.0814	0
51	SLU 34	0.00139	0.00004	-0.02369	0	-0.0081	0
51	SLU 35	0.07432	0.00003	-0.16034	0	-0.1047	0
51	SLU 36	0.07432	0.00003	-0.16034	0	-0.1047	0
51	SLU 37	0.00139	0.00005	-0.02369	0	-0.0081	0
51	SLU 38	0.05609	0.00004	-0.12618	0	-0.0806	0
51	SLU 39	0.07485	0.00003	-0.16201	0	-0.1056	0
51	SLU 40	0.07485	0.00003	-0.16201	0	-0.1056	0
51	SLU 41	0.00193	0.00005	-0.02537	0	-0.009	0
51	SLU 42	0.05662	0.00004	-0.12785	0	-0.0814	0
51	SLU 43	0.00246	0.00004	-0.02704	0	-0.0099	0
51	SLU 44	0.05715	0.00004	-0.12953	0	-0.0823	0
51	SLU 45	0.00246	0.00004	-0.02704	0	-0.0099	0
51	SLU 46	0.05715	0.00004	-0.12953	0	-0.0823	0
51	SLU 47	0.07432	0.00001	-0.16034	0.0001	-0.1047	0
51	SLU 48	0.07432	0.00001	-0.16034	0.0001	-0.1047	0
51	SLU 49	0.00139	0.00003	-0.02369	0.0001	-0.0081	0
51	SLU 50	0.05609	0.00002	-0.12618	0	-0.0806	0
51	SLU 51	0.07485	0.00001	-0.16201	0.0001	-0.1056	0

Nodo	Cont.	Spostamento			Rotazione		
Ind.	N.br.	ux	uy	uz	rx	ry	rz
51	SLU 52	0.07485	0.00001	-0.16201	0.0001	-0.1056	0
51	SLU 53	0.00193	0.00003	-0.02537	0.0001	-0.009	0
51	SLU 54	0.05662	0.00002	-0.12785	0	-0.0814	0
51	SLU 55	0.00246	0.00002	-0.02704	0.0001	-0.0099	0
51	SLU 56	0.05715	0.00002	-0.12953	0.0001	-0.0823	0
51	SLU 57	0.00246	0.00003	-0.02704	0.0001	-0.0099	0
51	SLU 58	0.05715	0.00002	-0.12953	0.0001	-0.0823	0
51	SLU 59	0.00139	-0.00001	-0.02369	0.0002	-0.0081	0
51	SLU 60	0.05609	-0.00002	-0.12618	0.0002	-0.0806	0
51	SLU 61	0.00139	-0.00001	-0.02369	0.0002	-0.0081	0
51	SLU 62	0.05609	-0.00001	-0.12618	0.0002	-0.0806	0
51	SLU 63	0.00193	-0.00001	-0.02537	0.0002	-0.009	0
51	SLU 64	0.05662	-0.00001	-0.12785	0.0002	-0.0814	0
51	SLU 65	0.00193	0	-0.02537	0.0002	-0.009	0
51	SLU 66	0.05662	-0.00001	-0.12785	0.0002	-0.0814	0
51	SLU 67	0.00181	0.00005	-0.0308	0	-0.0106	0
51	SLU 68	0.07473	0.00004	-0.16745	0	-0.1072	0
51	SLU 69	0.07473	0.00004	-0.16745	0	-0.1072	0
51	SLU 70	0.00181	0.00006	-0.0308	0	-0.0106	0
51	SLU 71	0.0565	0.00005	-0.13328	0	-0.083	0
51	SLU 72	0.07527	0.00004	-0.16912	0	-0.108	0
51	SLU 73	0.07527	0.00005	-0.16912	0	-0.108	0
51	SLU 74	0.00234	0.00006	-0.03247	0	-0.0114	0
51	SLU 75	0.05704	0.00005	-0.13496	0	-0.0839	0
51	SLU 76	0.00287	0.00005	-0.03415	0	-0.0123	0
51	SLU 77	0.05757	0.00005	-0.13664	0	-0.0848	0
51	SLU 78	0.00287	0.00006	-0.03415	0	-0.0123	0
51	SLU 79	0.05757	0.00005	-0.13664	0	-0.0848	0
51	SLU 80	0.07473	0.00002	-0.16745	0.0001	-0.1072	0
51	SLU 81	0.07473	0.00003	-0.16745	0.0001	-0.1072	0
51	SLU 82	0.00181	0.00004	-0.0308	0.0001	-0.0106	0
51	SLU 83	0.0565	0.00003	-0.13328	0.0001	-0.083	0
51	SLU 84	0.07527	0.00002	-0.16912	0.0001	-0.108	0
51	SLU 85	0.07527	0.00003	-0.16912	0.0001	-0.108	0
51	SLU 86	0.00234	0.00004	-0.03248	0.0001	-0.0114	0
51	SLU 87	0.05704	0.00003	-0.13496	0.0001	-0.0839	0
51	SLU 88	0.00287	0.00003	-0.03415	0.0001	-0.0123	0
51	SLU 89	0.05757	0.00003	-0.13664	0.0001	-0.0848	0
51	SLU 90	0.00287	0.00004	-0.03415	0.0001	-0.0123	0
51	SLU 91	0.05757	0.00003	-0.13664	0.0001	-0.0848	0
51	SLU 92	0.00181	0	-0.0308	0.0002	-0.0106	0
51	SLU 93	0.0565	0	-0.13328	0.0002	-0.083	0
51	SLU 94	0.00181	0.00001	-0.0308	0.0002	-0.0106	0
51	SLU 95	0.0565	0	-0.13328	0.0002	-0.083	0
51	SLU 96	0.00234	0	-0.03248	0.0002	-0.0114	0
51	SLU 97	0.05704	0	-0.13496	0.0002	-0.0839	0
51	SLU 98	0.00234	0.00001	-0.03248	0.0002	-0.0114	0
51	SLU 99	0.05704	0	-0.13496	0.0002	-0.0839	0
51	SLU 100	0.00181	0.00005	-0.0308	0	-0.0106	0
51	SLU 101	0.07473	0.00004	-0.16745	0	-0.1072	0
51	SLU 102	0.07473	0.00004	-0.16745	0	-0.1072	0
51	SLU 103	0.00181	0.00006	-0.0308	0	-0.0106	0
51	SLU 104	0.0565	0.00005	-0.13328	0	-0.083	0
51	SLU 105	0.07527	0.00004	-0.16912	0	-0.108	0
51	SLU 106	0.07527	0.00005	-0.16912	0	-0.108	0
51	SLU 107	0.00234	0.00006	-0.03247	0	-0.0114	0
51	SLU 108	0.05704	0.00005	-0.13496	0	-0.0839	0
51	SLU 109	0.00287	0.00005	-0.03415	0	-0.0123	0
51	SLU 110	0.05757	0.00005	-0.13664	0	-0.0848	0
51	SLU 111	0.00287	0.00006	-0.03415	0	-0.0123	0
51	SLU 112	0.05757	0.00005	-0.13664	0	-0.0848	0
51	SLU 113	0.07473	0.00002	-0.16745	0.0001	-0.1072	0
51	SLU 114	0.07473	0.00003	-0.16745	0.0001	-0.1072	0
51	SLU 115	0.00181	0.00004	-0.0308	0.0001	-0.0106	0
51	SLU 116	0.0565	0.00003	-0.13328	0.0001	-0.083	0
51	SLU 117	0.07527	0.00002	-0.16912	0.0001	-0.108	0
51	SLU 118	0.07527	0.00003	-0.16912	0.0001	-0.108	0
51	SLU 119	0.00234	0.00004	-0.03248	0.0001	-0.0114	0
51	SLU 120	0.05704	0.00003	-0.13496	0.0001	-0.0839	0
51	SLU 121	0.00287	0.00003	-0.03415	0.0001	-0.0123	0
51	SLU 122	0.05757	0.00003	-0.13664	0.0001	-0.0848	0
51	SLU 123	0.00287	0.00004	-0.03415	0.0001	-0.0123	0
51	SLU 124	0.05757	0.00003	-0.13664	0.0001	-0.0848	0
51	SLU 125	0.00181	0	-0.0308	0.0002	-0.0106	0
51	SLU 126	0.0565	0	-0.13328	0.0002	-0.083	0
51	SLU 127	0.00181	0.00001	-0.0308	0.0002	-0.0106	0
51	SLU 128	0.0565	0	-0.13328	0.0002	-0.083	0
51	SLU 129	0.00234	0	-0.03248	0.0002	-0.0114	0
51	SLU 130	0.05704	0	-0.13496	0.0002	-0.0839	0
51	SLU 131	0.00234	0.00001	-0.03248	0.0002	-0.0114	0
51	SLU 132	0.05704	0	-0.13496	0.0002	-0.0839	0
51	SLE RA 1	0.00139	0.00004	-0.02369	0	-0.0081	0
51	SLE RA 2	0.05001	0.00003	-0.11479	0	-0.0725	0
51	SLE RA 3	0.05001	0.00003	-0.11479	0	-0.0725	0
51	SLE RA 4	0.00139	0.00004	-0.02369	0	-0.0081	0
51	SLE RA 5	0.03786	0.00004	-0.09202	0	-0.0564	0
51	SLE RA 6	0.05036	0.00003	-0.11591	0	-0.0731	0
51	SLE RA 7	0.05036	0.00004	-0.11591	0	-0.0731	0
51	SLE RA 8	0.00175	0.00004	-0.02481	0	-0.0087	0
51	SLE RA 9	0.03821	0.00004	-0.09313	0	-0.057	0
51	SLE RA 10	0.0021	0.00004	-0.02593	0	-0.0093	0
51	SLE RA 11	0.03856	0.00004	-0.09425	0	-0.0576	0
51	SLE RA 12	0.0021	0.00004	-0.02593	0	-0.0093	0
51	SLE RA 13	0.03856	0.00004	-0.09425	0	-0.0576	0
51	SLE RA 14	0.05001	0.00002	-0.11479	0	-0.0725	0

Nodo	Cont.	Spostamento			Rotazione		
Ind.	N.br.	ux	uy	uz	rx	ry	rz
51	SLE RA 15	0.05001	0.00002	-0.11479	0	-0.0725	0
51	SLE RA 16	0.00139	0.00003	-0.02369	0	-0.0081	0
51	SLE RA 17	0.03786	0.00003	-0.09202	0	-0.0564	0
51	SLE RA 18	0.05036	0.00002	-0.11591	0	-0.0731	0
51	SLE RA 19	0.05036	0.00002	-0.11591	0	-0.0731	0
51	SLE RA 20	0.00175	0.00003	-0.02481	0	-0.0087	0
51	SLE RA 21	0.03821	0.00003	-0.09313	0	-0.057	0
51	SLE RA 22	0.0021	0.00003	-0.02593	0.0001	-0.0093	0
51	SLE RA 23	0.03856	0.00002	-0.09425	0	-0.0576	0
51	SLE RA 24	0.0021	0.00003	-0.02593	0	-0.0093	0
51	SLE RA 25	0.03856	0.00003	-0.09425	0	-0.0576	0
51	SLE RA 26	0.00139	0.00001	-0.02369	0.0001	-0.0081	0
51	SLE RA 27	0.03786	0	-0.09202	0.0001	-0.0564	0
51	SLE RA 28	0.00139	0.00001	-0.02369	0.0001	-0.0081	0
51	SLE RA 29	0.03786	0	-0.09202	0.0001	-0.0564	0
51	SLE RA 30	0.00175	0.00001	-0.02481	0.0001	-0.0087	0
51	SLE RA 31	0.03821	0	-0.09313	0.0001	-0.057	0
51	SLE RA 32	0.00175	0.00001	-0.02481	0.0001	-0.0087	0
51	SLE RA 33	0.03821	0.00001	-0.09313	0.0001	-0.057	0
51	SLE FR 1	0.00139	0.00004	-0.02369	0	-0.0081	0
51	SLE FR 2	0.03786	0.00003	-0.09202	0	-0.0564	0
51	SLE FR 3	0.00139	0.00004	-0.02369	0	-0.0081	0
51	SLE FR 4	0.00154	0.00004	-0.02414	0	-0.0084	0
51	SLE FR 5	0.00139	0.00003	-0.02369	0.0001	-0.0081	0
51	SLE QP 1	0.00139	0.00004	-0.02369	0	-0.0081	0
51	SLO 1	-0.00825	-0.00221	-0.0322	0.2299	-0.0072	0.0024
51	SLO 2	-0.00825	-0.00221	-0.0322	0.2299	-0.0072	0.0024
51	SLO 3	-0.00825	0.00229	-0.0322	-0.2299	-0.0072	-0.0023
51	SLO 4	-0.00825	0.00229	-0.0322	-0.2299	-0.0072	-0.0023
51	SLO 5	-0.0015	-0.00745	-0.02624	0.7662	-0.0078	0.0079
51	SLO 6	-0.0015	-0.00745	-0.02624	0.7662	-0.0078	0.0079
51	SLO 7	-0.0015	0.00753	-0.02624	-0.7662	-0.0078	-0.0079
51	SLO 8	-0.0015	0.00753	-0.02624	-0.7662	-0.0078	-0.0079
51	SLO 9	0.00429	-0.00745	-0.02114	0.7662	-0.0084	0.0079
51	SLO 10	0.00429	-0.00745	-0.02114	0.7662	-0.0084	0.0079
51	SLO 11	0.00429	0.00753	-0.02114	-0.7662	-0.0084	-0.0079
51	SLO 12	0.00429	0.00753	-0.02114	-0.7662	-0.0084	-0.0079
51	SLO 13	0.01103	-0.00221	-0.01518	0.2299	-0.0091	0.0024
51	SLO 14	0.01103	-0.00221	-0.01518	0.2299	-0.0091	0.0024
51	SLO 15	0.01103	0.00229	-0.01518	-0.2299	-0.0091	-0.0023
51	SLO 16	0.01103	0.00229	-0.01518	-0.2299	-0.0091	-0.0023
51	SLD 1	-0.00653	-0.00204	-0.03069	0.2124	-0.0073	0.0022
51	SLD 2	-0.00653	-0.00204	-0.03069	0.2124	-0.0073	0.0022
51	SLD 3	-0.00653	0.00212	-0.03069	-0.2124	-0.0073	-0.0022
51	SLD 4	-0.00653	0.00212	-0.03069	-0.2124	-0.0073	-0.0022
51	SLD 5	-0.00098	-0.00688	-0.02579	0.708	-0.0079	0.0073
51	SLD 6	-0.00098	-0.00688	-0.02579	0.708	-0.0079	0.0073
51	SLD 7	-0.00098	0.00696	-0.02579	-0.708	-0.0079	-0.0073
51	SLD 8	-0.00098	0.00696	-0.02579	-0.708	-0.0079	-0.0073
51	SLD 9	0.00377	-0.00688	-0.02159	0.708	-0.0084	0.0073
51	SLD 10	0.00377	-0.00688	-0.02159	0.708	-0.0084	0.0073
51	SLD 11	0.00377	0.00696	-0.02159	-0.708	-0.0084	-0.0073
51	SLD 12	0.00377	0.00696	-0.02159	-0.708	-0.0084	-0.0073
51	SLD 13	0.00932	-0.00204	-0.0167	0.2124	-0.0089	0.0022
51	SLD 14	0.00932	-0.00204	-0.0167	0.2124	-0.0089	0.0022
51	SLD 15	0.00932	0.00212	-0.0167	-0.2124	-0.0089	-0.0022
51	SLD 16	0.00932	0.00212	-0.0167	-0.2124	-0.0089	-0.0022
51	SLV 1	-0.01568	-0.00544	-0.03877	0.5602	-0.0064	0.0058
51	SLV 2	-0.01568	-0.00544	-0.03877	0.5602	-0.0064	0.0058
51	SLV 3	-0.01568	0.00551	-0.03877	-0.5602	-0.0064	-0.0057
51	SLV 4	-0.01568	0.00551	-0.03877	-0.5602	-0.0064	-0.0057
51	SLV 5	-0.00373	-0.01821	-0.02821	1.8673	-0.0076	0.0192
51	SLV 6	-0.00373	-0.01821	-0.02821	1.8673	-0.0076	0.0192
51	SLV 7	-0.00373	0.01829	-0.02821	-1.8673	-0.0076	-0.0192
51	SLV 8	-0.00373	0.01829	-0.02821	-1.8673	-0.0076	-0.0192
51	SLV 9	0.00652	-0.01821	-0.01917	1.8673	-0.0086	0.0192
51	SLV 10	0.00652	-0.01821	-0.01917	1.8673	-0.0086	0.0192
51	SLV 11	0.00652	0.01829	-0.01917	-1.8673	-0.0086	-0.0192
51	SLV 12	0.00652	0.01829	-0.01917	-1.8673	-0.0086	-0.0192
51	SLV 13	0.01847	-0.00544	-0.00862	0.5602	-0.0098	0.0058
51	SLV 14	0.01847	-0.00544	-0.00862	0.5602	-0.0098	0.0058
51	SLV 15	0.01847	0.00551	-0.00862	-0.5602	-0.0098	-0.0057
51	SLV 16	0.01847	0.00551	-0.00862	-0.5602	-0.0098	-0.0057
52	SLU 1	0.00426	0.00007	-0.00757	-0.0001	-0.0051	0.0001
52	SLU 2	0.11714	0.00007	0.005	-0.0001	-0.032	0.0002
52	SLU 3	0.11714	0.00007	0.005	-0.0001	-0.032	0.0002
52	SLU 4	0.00426	0.00007	-0.00757	-0.0001	-0.0051	0.0001
52	SLU 5	0.08892	0.00007	0.00185	-0.0001	-0.0253	0.0001
52	SLU 6	0.11807	0.00007	0.00486	-0.0001	-0.0324	0.0002
52	SLU 7	0.11807	0.00007	0.00486	-0.0001	-0.0324	0.0002
52	SLU 8	0.00519	0.00008	-0.00771	-0.0001	-0.0055	0.0001
52	SLU 9	0.08985	0.00008	0.00172	-0.0001	-0.0257	0.0001
52	SLU 10	0.00613	0.00007	-0.00785	-0.0001	-0.0059	0.0002
52	SLU 11	0.09079	0.00008	0.00158	-0.0001	-0.026	0.0002
52	SLU 12	0.00613	0.00008	-0.00785	-0.0001	-0.0059	0.0001
52	SLU 13	0.09079	0.00008	0.00158	-0.0001	-0.026	0.0002
52	SLU 14	0.11714	0.00007	0.005	-0.0002	-0.032	0.0003
52	SLU 15	0.11714	0.00007	0.005	-0.0002	-0.032	0.0003
52	SLU 16	0.00426	0.00007	-0.00757	-0.0002	-0.0051	0.0003
52	SLU 17	0.08892	0.00007	0.00185	-0.0002	-0.0253	0.0003
52	SLU 18	0.11807	0.00007	0.00486	-0.0002	-0.0324	0.0003
52	SLU 19	0.11807	0.00007	0.00486	-0.0002	-0.0324	0.0003
52	SLU 20	0.00519	0.00007	-0.00771	-0.0002	-0.0055	0.0003
52	SLU 21	0.08985	0.00008	0.00172	-0.0002	-0.0257	0.0003
52	SLU 22	0.00613	0.00007	-0.00785	-0.0002	-0.0059	0.0003

Nodo	Cont.	Spostamento			Rotazione		
Ind.	N.br.	ux	uy	uz	rx	ry	rz
52	SLU 23	0.09079	0.00007	0.00158	-0.0002	-0.026	0.0003
52	SLU 24	0.00613	0.00008	-0.00785	-0.0002	-0.0059	0.0003
52	SLU 25	0.09079	0.00008	0.00158	-0.0002	-0.026	0.0003
52	SLU 26	0.00426	0.00007	-0.00757	-0.0003	-0.0051	0.0006
52	SLU 27	0.08892	0.00007	0.00185	-0.0003	-0.0253	0.0006
52	SLU 28	0.00426	0.00007	-0.00757	-0.0003	-0.0051	0.0006
52	SLU 29	0.08892	0.00007	0.00185	-0.0003	-0.0253	0.0006
52	SLU 30	0.00519	0.00007	-0.00771	-0.0003	-0.0055	0.0006
52	SLU 31	0.08985	0.00007	0.00172	-0.0003	-0.0257	0.0006
52	SLU 32	0.00519	0.00007	-0.00771	-0.0003	-0.0055	0.0006
52	SLU 33	0.08985	0.00007	0.00172	-0.0003	-0.0257	0.0006
52	SLU 34	0.00426	0.00007	-0.00757	-0.0001	-0.0051	0.0001
52	SLU 35	0.11714	0.00007	0.005	-0.0001	-0.032	0.0002
52	SLU 36	0.11714	0.00007	0.005	-0.0001	-0.032	0.0002
52	SLU 37	0.00426	0.00007	-0.00757	-0.0001	-0.0051	0.0001
52	SLU 38	0.08892	0.00007	0.00185	-0.0001	-0.0253	0.0001
52	SLU 39	0.11807	0.00007	0.00486	-0.0001	-0.0324	0.0002
52	SLU 40	0.11807	0.00007	0.00486	-0.0001	-0.0324	0.0002
52	SLU 41	0.00519	0.00008	-0.00771	-0.0001	-0.0055	0.0001
52	SLU 42	0.08985	0.00008	0.00172	-0.0001	-0.0257	0.0001
52	SLU 43	0.00613	0.00007	-0.00785	-0.0001	-0.0059	0.0002
52	SLU 44	0.09079	0.00008	0.00158	-0.0001	-0.026	0.0002
52	SLU 45	0.00613	0.00008	-0.00785	-0.0001	-0.0059	0.0001
52	SLU 46	0.09079	0.00008	0.00158	-0.0001	-0.026	0.0002
52	SLU 47	0.11714	0.00007	0.005	-0.0002	-0.032	0.0003
52	SLU 48	0.11714	0.00007	0.005	-0.0002	-0.032	0.0003
52	SLU 49	0.00426	0.00007	-0.00757	-0.0002	-0.0051	0.0003
52	SLU 50	0.08892	0.00007	0.00185	-0.0002	-0.0253	0.0003
52	SLU 51	0.11807	0.00007	0.00486	-0.0002	-0.0324	0.0003
52	SLU 52	0.11807	0.00007	0.00486	-0.0002	-0.0324	0.0003
52	SLU 53	0.00519	0.00007	-0.00771	-0.0002	-0.0055	0.0003
52	SLU 54	0.08985	0.00008	0.00172	-0.0002	-0.0257	0.0003
52	SLU 55	0.00613	0.00007	-0.00785	-0.0002	-0.0059	0.0003
52	SLU 56	0.09079	0.00007	0.00158	-0.0002	-0.026	0.0003
52	SLU 57	0.00613	0.00008	-0.00785	-0.0002	-0.0059	0.0003
52	SLU 58	0.09079	0.00008	0.00158	-0.0002	-0.026	0.0003
52	SLU 59	0.00426	0.00007	-0.00757	-0.0003	-0.0051	0.0006
52	SLU 60	0.08892	0.00007	0.00185	-0.0003	-0.0253	0.0006
52	SLU 61	0.00426	0.00007	-0.00757	-0.0003	-0.0051	0.0006
52	SLU 62	0.08892	0.00007	0.00185	-0.0003	-0.0253	0.0006
52	SLU 63	0.00519	0.00007	-0.00771	-0.0003	-0.0055	0.0006
52	SLU 64	0.08985	0.00007	0.00172	-0.0003	-0.0257	0.0006
52	SLU 65	0.00519	0.00007	-0.00771	-0.0003	-0.0055	0.0006
52	SLU 66	0.08985	0.00007	0.00172	-0.0003	-0.0257	0.0006
52	SLU 67	0.00553	0.00009	-0.00985	-0.0001	-0.0066	0.0002
52	SLU 68	0.11841	0.00009	0.00272	-0.0001	-0.0335	0.0002
52	SLU 69	0.11841	0.00009	0.00272	-0.0001	-0.0335	0.0002
52	SLU 70	0.00553	0.00009	-0.00985	-0.0001	-0.0066	0.0002
52	SLU 71	0.09019	0.00009	-0.00042	-0.0001	-0.0268	0.0002
52	SLU 72	0.11935	0.00009	0.00259	-0.0002	-0.0339	0.0002
52	SLU 73	0.11935	0.00009	0.00259	-0.0001	-0.0339	0.0002
52	SLU 74	0.00647	0.0001	-0.00998	-0.0001	-0.007	0.0002
52	SLU 75	0.09113	0.0001	-0.00055	-0.0001	-0.0272	0.0002
52	SLU 76	0.0074	0.0001	-0.01012	-0.0001	-0.0074	0.0002
52	SLU 77	0.09207	0.0001	-0.00069	-0.0002	-0.0276	0.0002
52	SLU 78	0.0074	0.0001	-0.01012	-0.0001	-0.0074	0.0002
52	SLU 79	0.09207	0.0001	-0.00069	-0.0001	-0.0276	0.0002
52	SLU 80	0.11841	0.00009	0.00272	-0.0002	-0.0335	0.0004
52	SLU 81	0.11841	0.00009	0.00272	-0.0002	-0.0335	0.0004
52	SLU 82	0.00553	0.00009	-0.00985	-0.0002	-0.0066	0.0003
52	SLU 83	0.09019	0.00009	-0.00042	-0.0002	-0.0268	0.0003
52	SLU 84	0.11935	0.00009	0.00259	-0.0002	-0.0339	0.0004
52	SLU 85	0.11935	0.00009	0.00259	-0.0002	-0.0339	0.0004
52	SLU 86	0.00647	0.0001	-0.00998	-0.0002	-0.007	0.0003
52	SLU 87	0.09113	0.0001	-0.00055	-0.0002	-0.0272	0.0004
52	SLU 88	0.0074	0.00009	-0.01012	-0.0002	-0.0074	0.0004
52	SLU 89	0.09207	0.0001	-0.00069	-0.0002	-0.0276	0.0004
52	SLU 90	0.0074	0.0001	-0.01012	-0.0002	-0.0074	0.0004
52	SLU 91	0.09207	0.0001	-0.00069	-0.0002	-0.0276	0.0004
52	SLU 92	0.00553	0.00009	-0.00985	-0.0003	-0.0066	0.0006
52	SLU 93	0.09019	0.00009	-0.00042	-0.0003	-0.0268	0.0006
52	SLU 94	0.00553	0.00009	-0.00985	-0.0003	-0.0066	0.0006
52	SLU 95	0.09019	0.00009	-0.00042	-0.0003	-0.0268	0.0006
52	SLU 96	0.00647	0.00009	-0.00998	-0.0003	-0.007	0.0006
52	SLU 97	0.09113	0.00009	-0.00055	-0.0003	-0.0272	0.0006
52	SLU 98	0.00647	0.00009	-0.00998	-0.0003	-0.007	0.0006
52	SLU 99	0.09113	0.00009	-0.00055	-0.0003	-0.0272	0.0006
52	SLU 100	0.00553	0.00009	-0.00985	-0.0001	-0.0066	0.0002
52	SLU 101	0.11841	0.00009	0.00272	-0.0001	-0.0335	0.0002
52	SLU 102	0.11841	0.00009	0.00272	-0.0001	-0.0335	0.0002
52	SLU 103	0.00553	0.00009	-0.00985	-0.0001	-0.0066	0.0002
52	SLU 104	0.09019	0.00009	-0.00042	-0.0001	-0.0268	0.0002
52	SLU 105	0.11935	0.00009	0.00259	-0.0002	-0.0339	0.0002
52	SLU 106	0.11935	0.00009	0.00259	-0.0001	-0.0339	0.0002
52	SLU 107	0.00647	0.0001	-0.00998	-0.0001	-0.007	0.0002
52	SLU 108	0.09113	0.0001	-0.00055	-0.0001	-0.0272	0.0002
52	SLU 109	0.0074	0.0001	-0.01012	-0.0001	-0.0074	0.0002
52	SLU 110	0.09207	0.0001	-0.00069	-0.0002	-0.0276	0.0002
52	SLU 111	0.0074	0.0001	-0.01012	-0.0001	-0.0074	0.0002
52	SLU 112	0.09207	0.0001	-0.00069	-0.0001	-0.0276	0.0002
52	SLU 113	0.11841	0.00009	0.00272	-0.0002	-0.0335	0.0004
52	SLU 114	0.11841	0.00009	0.00272	-0.0002	-0.0335	0.0004
52	SLU 115	0.00553	0.00009	-0.00985	-0.0002	-0.0066	0.0003
52	SLU 116	0.09019	0.00009	-0.00042	-0.0002	-0.0268	0.0003
52	SLU 117	0.11935	0.00009	0.00259	-0.0002	-0.0339	0.0004

Nodo	Cont.	Spostamento			Rotazione		
Ind.	N.br.	ux	uy	uz	rx	ry	rz
52	SLU 118	0.11935	0.00009	0.00259	-0.0002	-0.0339	0.0004
52	SLU 119	0.00647	0.0001	-0.00998	-0.0002	-0.007	0.0003
52	SLU 120	0.09113	0.0001	-0.00055	-0.0002	-0.0272	0.0004
52	SLU 121	0.0074	0.00009	-0.01012	-0.0002	-0.0074	0.0004
52	SLU 122	0.09207	0.0001	-0.00069	-0.0002	-0.0276	0.0004
52	SLU 123	0.0074	0.0001	-0.01012	-0.0002	-0.0074	0.0004
52	SLU 124	0.09207	0.0001	-0.00069	-0.0002	-0.0276	0.0004
52	SLU 125	0.00553	0.00009	-0.00985	-0.0003	-0.0066	0.0006
52	SLU 126	0.09019	0.00009	-0.00042	-0.0003	-0.0268	0.0006
52	SLU 127	0.00553	0.00009	-0.00985	-0.0003	-0.0066	0.0006
52	SLU 128	0.09019	0.00009	-0.00042	-0.0003	-0.0268	0.0006
52	SLU 129	0.00647	0.00009	-0.00998	-0.0003	-0.007	0.0006
52	SLU 130	0.09113	0.00009	-0.00055	-0.0003	-0.0272	0.0006
52	SLU 131	0.00647	0.00009	-0.00998	-0.0003	-0.007	0.0006
52	SLU 132	0.09113	0.00009	-0.00055	-0.0003	-0.0272	0.0006
52	SLE RA 1	0.00426	0.00007	-0.00757	-0.0001	-0.0051	0.0001
52	SLE RA 2	0.07951	0.00007	0.00081	-0.0001	-0.023	0.0002
52	SLE RA 3	0.07951	0.00007	0.00081	-0.0001	-0.023	0.0002
52	SLE RA 4	0.00426	0.00007	-0.00757	-0.0001	-0.0051	0.0001
52	SLE RA 5	0.0607	0.00007	-0.00129	-0.0001	-0.0186	0.0001
52	SLE RA 6	0.08013	0.00007	0.00072	-0.0001	-0.0233	0.0002
52	SLE RA 7	0.08013	0.00007	0.00072	-0.0001	-0.0233	0.0002
52	SLE RA 8	0.00488	0.00007	-0.00766	-0.0001	-0.0054	0.0001
52	SLE RA 9	0.06132	0.00007	-0.00138	-0.0001	-0.0188	0.0001
52	SLE RA 10	0.0055	0.00007	-0.00775	-0.0001	-0.0056	0.0002
52	SLE RA 11	0.06194	0.00007	-0.00147	-0.0001	-0.0191	0.0002
52	SLE RA 12	0.0055	0.00007	-0.00775	-0.0001	-0.0056	0.0001
52	SLE RA 13	0.06194	0.00007	-0.00147	-0.0001	-0.0191	0.0002
52	SLE RA 14	0.07951	0.00007	0.00081	-0.0002	-0.023	0.0003
52	SLE RA 15	0.07951	0.00007	0.00081	-0.0002	-0.023	0.0003
52	SLE RA 16	0.00426	0.00007	-0.00757	-0.0001	-0.0051	0.0002
52	SLE RA 17	0.0607	0.00007	-0.00129	-0.0001	-0.0186	0.0003
52	SLE RA 18	0.08013	0.00007	0.00072	-0.0002	-0.0233	0.0003
52	SLE RA 19	0.08013	0.00007	0.00072	-0.0002	-0.0233	0.0003
52	SLE RA 20	0.00488	0.00007	-0.00766	-0.0001	-0.0054	0.0002
52	SLE RA 21	0.06132	0.00007	-0.00138	-0.0002	-0.0188	0.0003
52	SLE RA 22	0.0055	0.00007	-0.00775	-0.0002	-0.0056	0.0003
52	SLE RA 23	0.06194	0.00007	-0.00147	-0.0002	-0.0191	0.0003
52	SLE RA 24	0.0055	0.00007	-0.00775	-0.0001	-0.0056	0.0003
52	SLE RA 25	0.06194	0.00007	-0.00147	-0.0002	-0.0191	0.0003
52	SLE RA 26	0.00426	0.00007	-0.00757	-0.0002	-0.0051	0.0004
52	SLE RA 27	0.0607	0.00007	-0.00129	-0.0002	-0.0186	0.0004
52	SLE RA 28	0.00426	0.00007	-0.00757	-0.0002	-0.0051	0.0004
52	SLE RA 29	0.0607	0.00007	-0.00129	-0.0002	-0.0186	0.0004
52	SLE RA 30	0.00488	0.00007	-0.00766	-0.0002	-0.0054	0.0004
52	SLE RA 31	0.06132	0.00007	-0.00138	-0.0002	-0.0188	0.0004
52	SLE RA 32	0.00488	0.00007	-0.00766	-0.0002	-0.0054	0.0004
52	SLE RA 33	0.06132	0.00007	-0.00138	-0.0002	-0.0188	0.0004
52	SLE FR 1	0.00426	0.00007	-0.00757	-0.0001	-0.0051	0.0001
52	SLE FR 2	0.0607	0.00007	-0.00129	-0.0001	-0.0186	0.0002
52	SLE FR 3	0.00426	0.00007	-0.00757	-0.0001	-0.0051	0.0001
52	SLE FR 4	0.00451	0.00007	-0.00761	-0.0001	-0.0052	0.0001
52	SLE FR 5	0.00426	0.00007	-0.00757	-0.0001	-0.0051	0.0003
52	SLE QP 1	0.00426	0.00007	-0.00757	-0.0001	-0.0051	0.0001
52	SLO 1	-0.00575	-0.00016	-0.01193	-0.1096	-0.0086	0.2623
52	SLO 2	-0.00575	-0.00016	-0.01193	-0.1096	-0.0086	0.2623
52	SLO 3	-0.00575	0.0003	-0.01193	0.1094	-0.0086	-0.262
52	SLO 4	-0.00575	0.0003	-0.01193	0.1094	-0.0086	-0.262
52	SLO 5	0.00126	-0.00071	-0.00888	-0.3652	-0.0061	0.8741
52	SLO 6	0.00126	-0.00071	-0.00888	-0.3652	-0.0061	0.8741
52	SLO 7	0.00126	0.00085	-0.00888	0.365	-0.0061	-0.8738
52	SLO 8	0.00126	0.00085	-0.00888	0.365	-0.0061	-0.8738
52	SLO 9	0.00726	-0.00071	-0.00627	-0.3652	-0.0041	0.8741
52	SLO 10	0.00726	-0.00071	-0.00627	-0.3652	-0.0041	0.8741
52	SLO 11	0.00726	0.00085	-0.00627	0.365	-0.0041	-0.8738
52	SLO 12	0.00726	0.00085	-0.00627	0.365	-0.0041	-0.8738
52	SLO 13	0.01426	-0.00017	-0.00322	-0.1096	-0.0017	0.2623
52	SLO 14	0.01426	-0.00017	-0.00322	-0.1096	-0.0017	0.2623
52	SLO 15	0.01426	0.0003	-0.00322	0.1094	-0.0017	-0.262
52	SLO 16	0.01426	0.0003	-0.00322	0.1094	-0.0017	-0.262
52	SLD 1	-0.00397	-0.00015	-0.01116	-0.1013	-0.0079	0.2424
52	SLD 2	-0.00397	-0.00015	-0.01116	-0.1013	-0.0079	0.2424
52	SLD 3	-0.00397	0.00029	-0.01116	0.1011	-0.0079	-0.2421
52	SLD 4	-0.00397	0.00029	-0.01116	0.1011	-0.0079	-0.2421
52	SLD 5	0.00179	-0.00065	-0.00865	-0.3375	-0.006	0.8076
52	SLD 6	0.00179	-0.00065	-0.00865	-0.3375	-0.006	0.8076
52	SLD 7	0.00179	0.00079	-0.00865	0.3373	-0.006	-0.8073
52	SLD 8	0.00179	0.00079	-0.00865	0.3373	-0.006	-0.8073
52	SLD 9	0.00672	-0.00065	-0.0065	-0.3375	-0.0043	0.8076
52	SLD 10	0.00672	-0.00065	-0.0065	-0.3375	-0.0043	0.8076
52	SLD 11	0.00672	0.00079	-0.0065	0.3373	-0.0043	-0.8073
52	SLD 12	0.00672	0.00079	-0.0065	0.3373	-0.0043	-0.8073
52	SLD 13	0.01248	-0.00015	-0.00399	-0.1013	-0.0023	0.2424
52	SLD 14	0.01248	-0.00015	-0.00399	-0.1013	-0.0023	0.2424
52	SLD 15	0.01248	0.00029	-0.00399	0.1011	-0.0023	-0.2421
52	SLD 16	0.01248	0.00029	-0.00399	0.1011	-0.0023	-0.2421
52	SLV 1	-0.01346	-0.0005	-0.01529	-0.267	-0.0112	0.6391
52	SLV 2	-0.01346	-0.0005	-0.01529	-0.267	-0.0112	0.6391
52	SLV 3	-0.01346	0.00064	-0.01529	0.2668	-0.0112	-0.6388
52	SLV 4	-0.01346	0.00064	-0.01529	0.2668	-0.0112	-0.6388
52	SLV 5	-0.00106	-0.00183	-0.00989	-0.8899	-0.0069	2.1299
52	SLV 6	-0.00106	-0.00183	-0.00989	-0.8899	-0.0069	2.1299
52	SLV 7	-0.00106	0.00197	-0.00989	0.8897	-0.0069	-2.1296
52	SLV 8	-0.00106	0.00197	-0.00989	0.8897	-0.0069	-2.1296
52	SLV 9	0.00957	-0.00184	-0.00526	-0.8899	-0.0033	2.1299

Nodo	Cont.	Spostamento			Rotazione		
Ind.	N.br.	ux	uy	uz	rx	ry	rz
52	SLV 10	0.00957	-0.00184	-0.00526	-0.8899	-0.0033	2.1299
52	SLV 11	0.00957	0.00197	-0.00526	0.8897	-0.0033	-2.1296
52	SLV 12	0.00957	0.00197	-0.00526	0.8897	-0.0033	-2.1296
52	SLV 13	0.02198	-0.0005	0.00014	-0.267	0.001	0.6391
52	SLV 14	0.02198	-0.0005	0.00014	-0.267	0.001	0.6391
52	SLV 15	0.02198	0.00064	0.00014	0.2668	0.001	-0.6388
52	SLV 16	0.02198	0.00064	0.00014	0.2668	0.001	-0.6388
53	SLU 1	-0.00422	0.00019	-0.00754	-0.0003	0.0051	-0.0004
53	SLU 2	-0.06066	0.00019	-0.00126	-0.0003	0.0185	-0.0005
53	SLU 3	-0.06096	0.00019	-0.00121	-0.0003	0.0186	-0.0005
53	SLU 4	-0.00498	0.00019	-0.00743	-0.0003	0.0052	-0.0004
53	SLU 5	-0.0473	0.00019	-0.00272	-0.0003	0.0153	-0.0004
53	SLU 6	-0.0616	0.00019	-0.00139	-0.0003	0.0189	-0.0005
53	SLU 7	-0.0619	0.0002	-0.00135	-0.0003	0.019	-0.0005
53	SLU 8	-0.00591	0.0002	-0.00757	-0.0003	0.0056	-0.0004
53	SLU 9	-0.04824	0.0002	-0.00285	-0.0003	0.0157	-0.0005
53	SLU 10	-0.00609	0.0002	-0.00782	-0.0003	0.0058	-0.0004
53	SLU 11	-0.04842	0.0002	-0.0031	-0.0003	0.0159	-0.0005
53	SLU 12	-0.00639	0.0002	-0.00777	-0.0003	0.0059	-0.0004
53	SLU 13	-0.04872	0.0002	-0.00306	-0.0003	0.016	-0.0005
53	SLU 14	-0.06102	0.00019	-0.00143	-0.0004	0.0188	-0.0007
53	SLU 15	-0.06132	0.0002	-0.00139	-0.0004	0.0188	-0.0007
53	SLU 16	-0.00533	0.0002	-0.00761	-0.0004	0.0055	-0.0006
53	SLU 17	-0.04766	0.0002	-0.00289	-0.0004	0.0156	-0.0006
53	SLU 18	-0.06195	0.0002	-0.00157	-0.0004	0.0191	-0.0007
53	SLU 19	-0.06225	0.0002	-0.00153	-0.0004	0.0192	-0.0007
53	SLU 20	-0.00626	0.00021	-0.00775	-0.0004	0.0058	-0.0006
53	SLU 21	-0.04859	0.00021	-0.00303	-0.0004	0.0159	-0.0006
53	SLU 22	-0.00645	0.00021	-0.00799	-0.0004	0.0061	-0.0006
53	SLU 23	-0.04877	0.00021	-0.00328	-0.0004	0.0162	-0.0007
53	SLU 24	-0.00675	0.00021	-0.00795	-0.0004	0.0061	-0.0006
53	SLU 25	-0.04908	0.00021	-0.00323	-0.0004	0.0162	-0.0007
53	SLU 26	-0.00511	0.0002	-0.00799	-0.0005	0.0056	-0.0009
53	SLU 27	-0.04744	0.0002	-0.00327	-0.0005	0.0157	-0.0009
53	SLU 28	-0.00541	0.0002	-0.00794	-0.0005	0.0057	-0.0009
53	SLU 29	-0.04774	0.0002	-0.00323	-0.0005	0.0158	-0.0009
53	SLU 30	-0.00604	0.00021	-0.00812	-0.0005	0.006	-0.0009
53	SLU 31	-0.04837	0.00021	-0.00341	-0.0005	0.0161	-0.0009
53	SLU 32	-0.00634	0.00021	-0.00808	-0.0005	0.0061	-0.0009
53	SLU 33	-0.04867	0.00021	-0.00336	-0.0005	0.0162	-0.0009
53	SLU 34	-0.00422	0.00019	-0.00754	-0.0003	0.0051	-0.0004
53	SLU 35	-0.06066	0.00019	-0.00126	-0.0003	0.0185	-0.0005
53	SLU 36	-0.06096	0.00019	-0.00121	-0.0003	0.0186	-0.0005
53	SLU 37	-0.00498	0.00019	-0.00743	-0.0003	0.0052	-0.0004
53	SLU 38	-0.0473	0.00019	-0.00272	-0.0003	0.0153	-0.0004
53	SLU 39	-0.0616	0.00019	-0.00139	-0.0003	0.0189	-0.0005
53	SLU 40	-0.0619	0.0002	-0.00135	-0.0003	0.019	-0.0005
53	SLU 41	-0.00591	0.0002	-0.00757	-0.0003	0.0056	-0.0004
53	SLU 42	-0.04824	0.0002	-0.00285	-0.0003	0.0157	-0.0005
53	SLU 43	-0.00609	0.0002	-0.00782	-0.0003	0.0058	-0.0004
53	SLU 44	-0.04842	0.0002	-0.0031	-0.0003	0.0159	-0.0005
53	SLU 45	-0.00639	0.0002	-0.00777	-0.0003	0.0059	-0.0004
53	SLU 46	-0.04872	0.0002	-0.00306	-0.0003	0.016	-0.0005
53	SLU 47	-0.06102	0.00019	-0.00143	-0.0004	0.0188	-0.0007
53	SLU 48	-0.06132	0.0002	-0.00139	-0.0004	0.0188	-0.0007
53	SLU 49	-0.00533	0.0002	-0.00761	-0.0004	0.0055	-0.0006
53	SLU 50	-0.04766	0.0002	-0.00289	-0.0004	0.0156	-0.0006
53	SLU 51	-0.06195	0.0002	-0.00157	-0.0004	0.0191	-0.0007
53	SLU 52	-0.06225	0.0002	-0.00153	-0.0004	0.0192	-0.0007
53	SLU 53	-0.00626	0.00021	-0.00775	-0.0004	0.0058	-0.0006
53	SLU 54	-0.04859	0.00021	-0.00303	-0.0004	0.0159	-0.0006
53	SLU 55	-0.00645	0.00021	-0.00799	-0.0004	0.0061	-0.0006
53	SLU 56	-0.04877	0.00021	-0.00328	-0.0004	0.0162	-0.0007
53	SLU 57	-0.00675	0.00021	-0.00795	-0.0004	0.0061	-0.0006
53	SLU 58	-0.04908	0.00021	-0.00323	-0.0004	0.0162	-0.0007
53	SLU 59	-0.00511	0.0002	-0.00799	-0.0005	0.0056	-0.0009
53	SLU 60	-0.04744	0.0002	-0.00327	-0.0005	0.0157	-0.0009
53	SLU 61	-0.00541	0.0002	-0.00794	-0.0005	0.0057	-0.0009
53	SLU 62	-0.04774	0.0002	-0.00323	-0.0005	0.0158	-0.0009
53	SLU 63	-0.00604	0.00021	-0.00812	-0.0005	0.006	-0.0009
53	SLU 64	-0.04837	0.00021	-0.00341	-0.0005	0.0161	-0.0009
53	SLU 65	-0.00634	0.00021	-0.00808	-0.0005	0.0061	-0.0009
53	SLU 66	-0.04867	0.00021	-0.00336	-0.0005	0.0162	-0.0009
53	SLU 67	-0.00549	0.00024	-0.00981	-0.0004	0.0066	-0.0005
53	SLU 68	-0.06193	0.00024	-0.00352	-0.0004	0.0201	-0.0006
53	SLU 69	-0.06223	0.00025	-0.00348	-0.0004	0.0201	-0.0006
53	SLU 70	-0.00624	0.00025	-0.00969	-0.0004	0.0068	-0.0005
53	SLU 71	-0.04857	0.00025	-0.00498	-0.0004	0.0169	-0.0006
53	SLU 72	-0.06286	0.00025	-0.00366	-0.0004	0.0204	-0.0006
53	SLU 73	-0.06316	0.00025	-0.00361	-0.0004	0.0205	-0.0006
53	SLU 74	-0.00718	0.00026	-0.00983	-0.0004	0.0071	-0.0005
53	SLU 75	-0.04951	0.00026	-0.00512	-0.0004	0.0172	-0.0006
53	SLU 76	-0.00736	0.00026	-0.01008	-0.0004	0.0074	-0.0006
53	SLU 77	-0.04969	0.00026	-0.00536	-0.0004	0.0175	-0.0006
53	SLU 78	-0.00766	0.00026	-0.01003	-0.0004	0.0074	-0.0006
53	SLU 79	-0.04999	0.00026	-0.00532	-0.0004	0.0175	-0.0006
53	SLU 80	-0.06228	0.00025	-0.0037	-0.0005	0.0203	-0.0008
53	SLU 81	-0.06258	0.00025	-0.00365	-0.0005	0.0203	-0.0008
53	SLU 82	-0.0066	0.00026	-0.00987	-0.0004	0.007	-0.0007
53	SLU 83	-0.04893	0.00026	-0.00516	-0.0005	0.0171	-0.0008
53	SLU 84	-0.06322	0.00026	-0.00383	-0.0005	0.0207	-0.0008
53	SLU 85	-0.06352	0.00026	-0.00379	-0.0005	0.0207	-0.0008
53	SLU 86	-0.00753	0.00026	-0.01001	-0.0005	0.0074	-0.0007
53	SLU 87	-0.04986	0.00026	-0.00529	-0.0005	0.0175	-0.0008
53	SLU 88	-0.00771	0.00026	-0.01026	-0.0005	0.0076	-0.0008

Nodo	Cont.	Spostamento			Rotazione		
Ind.	N.br.	ux	uy	uz	rx	ry	rz
53	SLU 89	-0.05004	0.00026	-0.00554	-0.0005	0.0177	-0.0008
53	SLU 90	-0.00801	0.00026	-0.01021	-0.0005	0.0077	-0.0007
53	SLU 91	-0.05034	0.00027	-0.0055	-0.0005	0.0177	-0.0008
53	SLU 92	-0.00638	0.00026	-0.01025	-0.0006	0.0072	-0.001
53	SLU 93	-0.0487	0.00026	-0.00553	-0.0006	0.0173	-0.0011
53	SLU 94	-0.00668	0.00026	-0.0102	-0.0006	0.0072	-0.001
53	SLU 95	-0.049	0.00026	-0.00549	-0.0006	0.0173	-0.001
53	SLU 96	-0.00731	0.00026	-0.01039	-0.0006	0.0075	-0.001
53	SLU 97	-0.04964	0.00026	-0.00567	-0.0006	0.0176	-0.0011
53	SLU 98	-0.00761	0.00027	-0.01034	-0.0006	0.0076	-0.001
53	SLU 99	-0.04994	0.00027	-0.00563	-0.0006	0.0177	-0.0011
53	SLU 100	-0.00549	0.00024	-0.00981	-0.0004	0.0066	-0.0005
53	SLU 101	-0.06193	0.00024	-0.00352	-0.0004	0.0201	-0.0006
53	SLU 102	-0.06223	0.00025	-0.00348	-0.0004	0.0201	-0.0006
53	SLU 103	-0.00624	0.00025	-0.00969	-0.0004	0.0068	-0.0005
53	SLU 104	-0.04857	0.00025	-0.00498	-0.0004	0.0169	-0.0006
53	SLU 105	-0.06286	0.00025	-0.00366	-0.0004	0.0204	-0.0006
53	SLU 106	-0.06316	0.00025	-0.00361	-0.0004	0.0205	-0.0006
53	SLU 107	-0.00718	0.00026	-0.00983	-0.0004	0.0071	-0.0005
53	SLU 108	-0.04951	0.00026	-0.00512	-0.0004	0.0172	-0.0006
53	SLU 109	-0.00736	0.00026	-0.01008	-0.0004	0.0074	-0.0006
53	SLU 110	-0.04969	0.00026	-0.00536	-0.0004	0.0175	-0.0006
53	SLU 111	-0.00766	0.00026	-0.01003	-0.0004	0.0074	-0.0006
53	SLU 112	-0.04999	0.00026	-0.00532	-0.0004	0.0175	-0.0006
53	SLU 113	-0.06228	0.00025	-0.0037	-0.0005	0.0203	-0.0008
53	SLU 114	-0.06258	0.00025	-0.00365	-0.0005	0.0203	-0.0008
53	SLU 115	-0.0066	0.00026	-0.00987	-0.0004	0.007	-0.0007
53	SLU 116	-0.04893	0.00026	-0.00516	-0.0005	0.0171	-0.0008
53	SLU 117	-0.06322	0.00026	-0.00383	-0.0005	0.0207	-0.0008
53	SLU 118	-0.06352	0.00026	-0.00379	-0.0005	0.0207	-0.0008
53	SLU 119	-0.00753	0.00026	-0.01001	-0.0005	0.0074	-0.0007
53	SLU 120	-0.04986	0.00026	-0.00529	-0.0005	0.0175	-0.0008
53	SLU 121	-0.00771	0.00026	-0.01026	-0.0005	0.0076	-0.0008
53	SLU 122	-0.05004	0.00026	-0.00554	-0.0005	0.0177	-0.0008
53	SLU 123	-0.00801	0.00026	-0.01021	-0.0005	0.0077	-0.0007
53	SLU 124	-0.05034	0.00027	-0.0055	-0.0005	0.0177	-0.0008
53	SLU 125	-0.00638	0.00026	-0.01025	-0.0006	0.0072	-0.001
53	SLU 126	-0.0487	0.00026	-0.00553	-0.0006	0.0173	-0.0011
53	SLU 127	-0.00668	0.00026	-0.0102	-0.0006	0.0072	-0.001
53	SLU 128	-0.049	0.00026	-0.00549	-0.0006	0.0173	-0.001
53	SLU 129	-0.00731	0.00026	-0.01039	-0.0006	0.0075	-0.001
53	SLU 130	-0.04964	0.00026	-0.00567	-0.0006	0.0176	-0.0011
53	SLU 131	-0.00761	0.00027	-0.01034	-0.0006	0.0076	-0.001
53	SLU 132	-0.04994	0.00027	-0.00563	-0.0006	0.0177	-0.0011
53	SLE RA 1	-0.00422	0.00019	-0.00754	-0.0003	0.0051	-0.0004
53	SLE RA 2	-0.04185	0.00019	-0.00335	-0.0003	0.014	-0.0005
53	SLE RA 3	-0.04205	0.00019	-0.00332	-0.0003	0.0141	-0.0005
53	SLE RA 4	-0.00473	0.00019	-0.00747	-0.0003	0.0052	-0.0004
53	SLE RA 5	-0.03294	0.00019	-0.00433	-0.0003	0.0119	-0.0004
53	SLE RA 6	-0.04247	0.00019	-0.00344	-0.0003	0.0143	-0.0005
53	SLE RA 7	-0.04267	0.00019	-0.00341	-0.0003	0.0143	-0.0005
53	SLE RA 8	-0.00535	0.0002	-0.00756	-0.0003	0.0054	-0.0004
53	SLE RA 9	-0.03357	0.0002	-0.00442	-0.0003	0.0122	-0.0004
53	SLE RA 10	-0.00547	0.0002	-0.00773	-0.0003	0.0056	-0.0004
53	SLE RA 11	-0.03369	0.0002	-0.00458	-0.0003	0.0123	-0.0005
53	SLE RA 12	-0.00567	0.0002	-0.0077	-0.0003	0.0056	-0.0004
53	SLE RA 13	-0.03389	0.0002	-0.00455	-0.0003	0.0124	-0.0005
53	SLE RA 14	-0.04208	0.00019	-0.00347	-0.0004	0.0142	-0.0006
53	SLE RA 15	-0.04229	0.00019	-0.00344	-0.0004	0.0142	-0.0006
53	SLE RA 16	-0.00496	0.0002	-0.00759	-0.0003	0.0053	-0.0005
53	SLE RA 17	-0.03318	0.0002	-0.00444	-0.0004	0.0121	-0.0006
53	SLE RA 18	-0.04271	0.0002	-0.00356	-0.0004	0.0145	-0.0006
53	SLE RA 19	-0.04291	0.0002	-0.00353	-0.0004	0.0145	-0.0006
53	SLE RA 20	-0.00558	0.0002	-0.00768	-0.0003	0.0056	-0.0005
53	SLE RA 21	-0.0338	0.0002	-0.00454	-0.0004	0.0123	-0.0006
53	SLE RA 22	-0.00571	0.0002	-0.00784	-0.0003	0.0057	-0.0006
53	SLE RA 23	-0.03392	0.0002	-0.0047	-0.0004	0.0125	-0.0006
53	SLE RA 24	-0.00591	0.0002	-0.00781	-0.0003	0.0058	-0.0005
53	SLE RA 25	-0.03412	0.0002	-0.00467	-0.0004	0.0125	-0.0006
53	SLE RA 26	-0.00481	0.0002	-0.00784	-0.0004	0.0055	-0.0007
53	SLE RA 27	-0.03303	0.0002	-0.0047	-0.0004	0.0122	-0.0008
53	SLE RA 28	-0.00501	0.0002	-0.00781	-0.0004	0.0055	-0.0007
53	SLE RA 29	-0.03323	0.0002	-0.00467	-0.0004	0.0122	-0.0008
53	SLE RA 30	-0.00544	0.0002	-0.00793	-0.0004	0.0057	-0.0007
53	SLE RA 31	-0.03366	0.0002	-0.00479	-0.0004	0.0124	-0.0008
53	SLE RA 32	-0.00564	0.0002	-0.0079	-0.0004	0.0058	-0.0007
53	SLE RA 33	-0.03386	0.0002	-0.00476	-0.0004	0.0125	-0.0008
53	SLE FR 1	-0.00422	0.00019	-0.00754	-0.0003	0.0051	-0.0004
53	SLE FR 2	-0.03244	0.00019	-0.0044	-0.0003	0.0118	-0.0005
53	SLE FR 3	-0.00442	0.00019	-0.00751	-0.0003	0.0051	-0.0004
53	SLE FR 4	-0.00447	0.00019	-0.00758	-0.0003	0.0052	-0.0004
53	SLE FR 5	-0.00446	0.00019	-0.00766	-0.0003	0.0052	-0.0005
53	SLE QP 1	-0.00422	0.00019	-0.00754	-0.0003	0.0051	-0.0004
53	SLO 1	-0.01418	-0.00004	-0.00321	-0.1098	0.0017	-0.2626
53	SLO 2	-0.01418	-0.00004	-0.00321	-0.1098	0.0017	-0.2626
53	SLO 3	-0.01418	0.00041	-0.00321	0.1093	0.0017	0.2618
53	SLO 4	-0.01418	0.00041	-0.00321	0.1093	0.0017	0.2618
53	SLO 5	-0.00721	-0.00055	-0.00624	-0.3655	0.0041	-0.8745
53	SLO 6	-0.00721	-0.00055	-0.00624	-0.3655	0.0041	-0.8745
53	SLO 7	-0.00721	0.00093	-0.00624	0.3649	0.0041	0.8736
53	SLO 8	-0.00721	0.00093	-0.00624	0.3649	0.0041	0.8736
53	SLO 9	-0.00124	-0.00055	-0.00884	-0.3655	0.0061	-0.8745
53	SLO 10	-0.00124	-0.00055	-0.00884	-0.3655	0.0061	-0.8745
53	SLO 11	-0.00124	0.00093	-0.00884	0.3649	0.0061	0.8736
53	SLO 12	-0.00124	0.00093	-0.00884	0.3649	0.0061	0.8736

Nodo	Cont.	Spostamento			Rotazione		
Ind.	N.br.	ux	uy	uz	rx	ry	rz
53	SLO 13	0.00573	-0.00003	-0.01188	-0.1098	0.0085	-0.2626
53	SLO 14	0.00573	-0.00003	-0.01188	-0.1098	0.0085	-0.2626
53	SLO 15	0.00573	0.00041	-0.01188	0.1093	0.0085	0.2618
53	SLO 16	0.00573	0.00041	-0.01188	0.1093	0.0085	0.2618
53	SLD 1	-0.01241	-0.00002	-0.00398	-0.1015	0.0023	-0.2427
53	SLD 2	-0.01241	-0.00002	-0.00398	-0.1015	0.0023	-0.2427
53	SLD 3	-0.01241	0.00039	-0.00398	0.101	0.0023	0.2419
53	SLD 4	-0.01241	0.00039	-0.00398	0.101	0.0023	0.2419
53	SLD 5	-0.00668	-0.0005	-0.00647	-0.3377	0.0042	-0.808
53	SLD 6	-0.00668	-0.0005	-0.00647	-0.3377	0.0042	-0.808
53	SLD 7	-0.00668	0.00087	-0.00647	0.3372	0.0042	0.8072
53	SLD 8	-0.00668	0.00087	-0.00647	0.3372	0.0042	0.8072
53	SLD 9	-0.00177	-0.0005	-0.00861	-0.3377	0.0059	-0.808
53	SLD 10	-0.00177	-0.0005	-0.00861	-0.3377	0.0059	-0.808
53	SLD 11	-0.00177	0.00087	-0.00861	0.3372	0.0059	0.8072
53	SLD 12	-0.00177	0.00087	-0.00861	0.3372	0.0059	0.8072
53	SLD 13	0.00396	-0.00002	-0.01111	-0.1015	0.0079	-0.2427
53	SLD 14	0.00396	-0.00002	-0.01111	-0.1015	0.0079	-0.2427
53	SLD 15	0.00396	0.00039	-0.01111	0.1009	0.0079	0.2419
53	SLD 16	0.00396	0.00039	-0.01111	0.1009	0.0079	0.2419
53	SLV 1	-0.02186	-0.00036	0.00014	-0.2673	-0.001	-0.6394
53	SLV 2	-0.02186	-0.00036	0.00014	-0.2673	-0.001	-0.6394
53	SLV 3	-0.02186	0.00073	0.00014	0.2667	-0.001	0.6386
53	SLV 4	-0.02186	0.00073	0.00014	0.2667	-0.001	0.6386
53	SLV 5	-0.00952	-0.00162	-0.00524	-0.8903	0.0033	-2.1305
53	SLV 6	-0.00952	-0.00162	-0.00524	-0.8903	0.0033	-2.1305
53	SLV 7	-0.00952	0.00199	-0.00524	0.8897	0.0033	2.1296
53	SLV 8	-0.00952	0.00199	-0.00524	0.8897	0.0033	2.1296
53	SLV 9	0.00107	-0.00162	-0.00985	-0.8903	0.0069	-2.1305
53	SLV 10	0.00107	-0.00162	-0.00985	-0.8903	0.0069	-2.1305
53	SLV 11	0.00107	0.00199	-0.00985	0.8897	0.0069	2.1296
53	SLV 12	0.00107	0.00199	-0.00985	0.8897	0.0069	2.1296
53	SLV 13	0.01342	-0.00035	-0.01523	-0.2673	0.0111	-0.6394
53	SLV 14	0.01342	-0.00035	-0.01523	-0.2673	0.0111	-0.6394
53	SLV 15	0.01342	0.00073	-0.01523	0.2667	0.0111	0.6386
53	SLV 16	0.01342	0.00073	-0.01523	0.2667	0.0111	0.6386
54	SLU 1	-0.00138	0.00009	-0.02357	0	0.0081	0
54	SLU 2	-0.03784	0.00006	-0.09188	-0.0001	0.0564	-0.0001
54	SLU 3	-0.03804	0.00006	-0.09222	-0.0001	0.0566	-0.0001
54	SLU 4	-0.00188	0.0001	-0.02441	0	0.0087	0
54	SLU 5	-0.02922	0.00007	-0.07565	-0.0001	0.0449	0
54	SLU 6	-0.03837	0.00006	-0.09356	-0.0001	0.0573	-0.0001
54	SLU 7	-0.03857	0.00006	-0.0939	-0.0001	0.0575	-0.0001
54	SLU 8	-0.00241	0.0001	-0.02609	0	0.0096	0
54	SLU 9	-0.02975	0.00008	-0.07733	-0.0001	0.0458	0
54	SLU 10	-0.00244	0.0001	-0.02693	0	0.0098	0
54	SLU 11	-0.02979	0.00007	-0.07816	0	0.046	-0.0001
54	SLU 12	-0.00264	0.0001	-0.02727	0	0.0101	0
54	SLU 13	-0.02999	0.00007	-0.0785	-0.0001	0.0463	-0.0001
54	SLU 14	-0.038	0.00004	-0.09281	0	0.0568	-0.0001
54	SLU 15	-0.0382	0.00005	-0.09315	0	0.057	-0.0001
54	SLU 16	-0.00204	0.00008	-0.02534	0	0.0091	0
54	SLU 17	-0.02938	0.00006	-0.07658	0	0.0453	-0.0001
54	SLU 18	-0.03853	0.00005	-0.09449	0	0.0576	-0.0001
54	SLU 19	-0.03873	0.00005	-0.09483	0	0.0579	-0.0001
54	SLU 20	-0.00257	0.00008	-0.02702	0	0.01	0
54	SLU 21	-0.02991	0.00006	-0.07826	0	0.0462	-0.0001
54	SLU 22	-0.0026	0.00008	-0.02785	0.0001	0.0102	0
54	SLU 23	-0.02995	0.00006	-0.07909	0	0.0464	-0.0001
54	SLU 24	-0.0028	0.00008	-0.02819	0	0.0104	0
54	SLU 25	-0.03015	0.00006	-0.07943	0	0.0467	-0.0001
54	SLU 26	-0.00179	0.00005	-0.02588	0.0002	0.009	-0.0001
54	SLU 27	-0.02913	0.00003	-0.07711	0.0001	0.0452	-0.0001
54	SLU 28	-0.00198	0.00005	-0.02622	0.0002	0.0093	-0.0001
54	SLU 29	-0.02933	0.00003	-0.07745	0.0001	0.0455	-0.0001
54	SLU 30	-0.00232	0.00005	-0.02756	0.0002	0.0099	-0.0001
54	SLU 31	-0.02966	0.00003	-0.07879	0.0001	0.0461	-0.0001
54	SLU 32	-0.00251	0.00006	-0.0279	0.0002	0.0101	-0.0001
54	SLU 33	-0.02986	0.00003	-0.07913	0.0001	0.0463	-0.0001
54	SLU 34	-0.00138	0.00009	-0.02357	0	0.0081	0
54	SLU 35	-0.03784	0.00006	-0.09188	-0.0001	0.0564	-0.0001
54	SLU 36	-0.03804	0.00006	-0.09222	-0.0001	0.0566	-0.0001
54	SLU 37	-0.00188	0.0001	-0.02441	0	0.0087	0
54	SLU 38	-0.02922	0.00007	-0.07565	-0.0001	0.0449	0
54	SLU 39	-0.03837	0.00006	-0.09356	-0.0001	0.0573	-0.0001
54	SLU 40	-0.03857	0.00006	-0.0939	-0.0001	0.0575	-0.0001
54	SLU 41	-0.00241	0.0001	-0.02609	0	0.0096	0
54	SLU 42	-0.02975	0.00008	-0.07733	-0.0001	0.0458	0
54	SLU 43	-0.00244	0.0001	-0.02693	0	0.0098	0
54	SLU 44	-0.02979	0.00007	-0.07816	0	0.046	-0.0001
54	SLU 45	-0.00264	0.0001	-0.02727	0	0.0101	0
54	SLU 46	-0.02999	0.00007	-0.0785	-0.0001	0.0463	-0.0001
54	SLU 47	-0.038	0.00004	-0.09281	0	0.0568	-0.0001
54	SLU 48	-0.0382	0.00005	-0.09315	0	0.057	-0.0001
54	SLU 49	-0.00204	0.00008	-0.02534	0	0.0091	0
54	SLU 50	-0.02938	0.00006	-0.07658	0	0.0453	-0.0001
54	SLU 51	-0.03853	0.00005	-0.09449	0	0.0576	-0.0001
54	SLU 52	-0.03873	0.00005	-0.09483	0	0.0579	-0.0001
54	SLU 53	-0.00257	0.00008	-0.02702	0	0.01	0
54	SLU 54	-0.02991	0.00006	-0.07826	0	0.0462	-0.0001
54	SLU 55	-0.0026	0.00008	-0.02785	0.0001	0.0102	0
54	SLU 56	-0.02995	0.00006	-0.07909	0	0.0464	-0.0001
54	SLU 57	-0.0028	0.00008	-0.02819	0	0.0104	0
54	SLU 58	-0.03015	0.00006	-0.07943	0	0.0467	-0.0001
54	SLU 59	-0.00179	0.00005	-0.02588	0.0002	0.009	-0.0001

Nodo	Cont.	Spostamento			Rotazione		
Ind.	N.br.	ux	uy	uz	rx	ry	rz
54	SLU 60	-0.02913	0.00003	-0.07711	0.0001	0.0452	-0.0001
54	SLU 61	-0.00198	0.00005	-0.02622	0.0002	0.0093	-0.0001
54	SLU 62	-0.02933	0.00003	-0.07745	0.0001	0.0455	-0.0001
54	SLU 63	-0.00232	0.00005	-0.02756	0.0002	0.0099	-0.0001
54	SLU 64	-0.02966	0.00003	-0.07879	0.0001	0.0461	-0.0001
54	SLU 65	-0.00251	0.00006	-0.0279	0.0002	0.0101	-0.0001
54	SLU 66	-0.02986	0.00003	-0.07913	0.0001	0.0463	-0.0001
54	SLU 67	-0.0018	0.00012	-0.03064	0	0.0105	0
54	SLU 68	-0.03826	0.00009	-0.09895	-0.0001	0.0588	-0.0001
54	SLU 69	-0.03846	0.00009	-0.09929	-0.0001	0.0591	-0.0001
54	SLU 70	-0.00229	0.00013	-0.03148	0	0.0112	0
54	SLU 71	-0.02964	0.0001	-0.08272	-0.0001	0.0474	-0.0001
54	SLU 72	-0.03879	0.00009	-0.10063	-0.0001	0.0597	-0.0001
54	SLU 73	-0.03899	0.00009	-0.10097	-0.0001	0.0599	-0.0001
54	SLU 74	-0.00282	0.00013	-0.03316	0	0.012	0
54	SLU 75	-0.03017	0.0001	-0.0844	-0.0001	0.0482	-0.0001
54	SLU 76	-0.00286	0.00013	-0.034	0	0.0122	-0.0001
54	SLU 77	-0.0302	0.0001	-0.08523	-0.0001	0.0485	-0.0001
54	SLU 78	-0.00306	0.00013	-0.03434	0	0.0125	-0.0001
54	SLU 79	-0.0304	0.0001	-0.08557	-0.0001	0.0487	-0.0001
54	SLU 80	-0.03842	0.00007	-0.09988	0	0.0592	-0.0001
54	SLU 81	-0.03862	0.00007	-0.10022	0	0.0594	-0.0001
54	SLU 82	-0.00245	0.00011	-0.03241	0	0.0115	-0.0001
54	SLU 83	-0.0298	0.00009	-0.08365	0	0.0477	-0.0001
54	SLU 84	-0.03895	0.00007	-0.10156	0	0.06	-0.0001
54	SLU 85	-0.03915	0.00008	-0.1019	0	0.0603	-0.0001
54	SLU 86	-0.00298	0.00011	-0.03409	0	0.0124	-0.0001
54	SLU 87	-0.03033	0.00009	-0.08533	0	0.0486	-0.0001
54	SLU 88	-0.00302	0.00011	-0.03492	0.0001	0.0126	-0.0001
54	SLU 89	-0.03036	0.00008	-0.08616	0	0.0488	-0.0001
54	SLU 90	-0.00322	0.00011	-0.03526	0	0.0129	-0.0001
54	SLU 91	-0.03056	0.00009	-0.0865	0	0.0491	-0.0001
54	SLU 92	-0.0022	0.00008	-0.03295	0.0002	0.0114	-0.0001
54	SLU 93	-0.02955	0.00005	-0.08418	0.0001	0.0477	-0.0001
54	SLU 94	-0.0024	0.00008	-0.03329	0.0002	0.0117	-0.0001
54	SLU 95	-0.02974	0.00006	-0.08452	0.0001	0.0479	-0.0001
54	SLU 96	-0.00273	0.00008	-0.03463	0.0002	0.0123	-0.0001
54	SLU 97	-0.03008	0.00006	-0.08586	0.0001	0.0485	-0.0001
54	SLU 98	-0.00293	0.00008	-0.03497	0.0002	0.0126	-0.0001
54	SLU 99	-0.03027	0.00006	-0.0862	0.0001	0.0488	-0.0001
54	SLU 100	-0.0018	0.00012	-0.03064	0	0.0105	0
54	SLU 101	-0.03826	0.00009	-0.09895	-0.0001	0.0588	-0.0001
54	SLU 102	-0.03846	0.00009	-0.09929	-0.0001	0.0591	-0.0001
54	SLU 103	-0.00229	0.00013	-0.03148	0	0.0112	0
54	SLU 104	-0.02964	0.0001	-0.08272	-0.0001	0.0474	-0.0001
54	SLU 105	-0.03879	0.00009	-0.10063	-0.0001	0.0597	-0.0001
54	SLU 106	-0.03899	0.00009	-0.10097	-0.0001	0.0599	-0.0001
54	SLU 107	-0.00282	0.00013	-0.03316	0	0.012	0
54	SLU 108	-0.03017	0.0001	-0.0844	-0.0001	0.0482	-0.0001
54	SLU 109	-0.00286	0.00013	-0.034	0	0.0122	-0.0001
54	SLU 110	-0.0302	0.0001	-0.08523	-0.0001	0.0485	-0.0001
54	SLU 111	-0.00306	0.00013	-0.03434	0	0.0125	-0.0001
54	SLU 112	-0.0304	0.0001	-0.08557	-0.0001	0.0487	-0.0001
54	SLU 113	-0.03842	0.00007	-0.09988	0	0.0592	-0.0001
54	SLU 114	-0.03862	0.00007	-0.10022	0	0.0594	-0.0001
54	SLU 115	-0.00245	0.00011	-0.03241	0	0.0115	-0.0001
54	SLU 116	-0.0298	0.00009	-0.08365	0	0.0477	-0.0001
54	SLU 117	-0.03895	0.00007	-0.10156	0	0.06	-0.0001
54	SLU 118	-0.03915	0.00008	-0.1019	0	0.0603	-0.0001
54	SLU 119	-0.00298	0.00011	-0.03409	0	0.0124	-0.0001
54	SLU 120	-0.03033	0.00009	-0.08533	0	0.0486	-0.0001
54	SLU 121	-0.00302	0.00011	-0.03492	0.0001	0.0126	-0.0001
54	SLU 122	-0.03036	0.00008	-0.08616	0	0.0488	-0.0001
54	SLU 123	-0.00322	0.00011	-0.03526	0	0.0129	-0.0001
54	SLU 124	-0.03056	0.00009	-0.0865	0	0.0491	-0.0001
54	SLU 125	-0.0022	0.00008	-0.03295	0.0002	0.0114	-0.0001
54	SLU 126	-0.02955	0.00005	-0.08418	0.0001	0.0477	-0.0001
54	SLU 127	-0.0024	0.00008	-0.03329	0.0002	0.0117	-0.0001
54	SLU 128	-0.02974	0.00006	-0.08452	0.0001	0.0479	-0.0001
54	SLU 129	-0.00273	0.00008	-0.03463	0.0002	0.0123	-0.0001
54	SLU 130	-0.03008	0.00006	-0.08586	0.0001	0.0485	-0.0001
54	SLU 131	-0.00293	0.00008	-0.03497	0.0002	0.0126	-0.0001
54	SLU 132	-0.03027	0.00006	-0.0862	0.0001	0.0488	-0.0001
54	SLE RA 1	-0.00138	0.00009	-0.02357	0	0.0081	0
54	SLE RA 2	-0.02569	0.00007	-0.06911	0	0.0403	0
54	SLE RA 3	-0.02582	0.00007	-0.06934	0	0.0405	0
54	SLE RA 4	-0.00171	0.0001	-0.02413	0	0.0085	0
54	SLE RA 5	-0.01994	0.00008	-0.05829	0	0.0327	0
54	SLE RA 6	-0.02604	0.00007	-0.07023	0	0.0409	0
54	SLE RA 7	-0.02617	0.00007	-0.07046	0	0.041	0
54	SLE RA 8	-0.00207	0.0001	-0.02525	0	0.0091	0
54	SLE RA 9	-0.0203	0.00008	-0.05941	0	0.0332	0
54	SLE RA 10	-0.00209	0.0001	-0.02581	0	0.0092	0
54	SLE RA 11	-0.02032	0.00008	-0.05996	0	0.0334	0
54	SLE RA 12	-0.00222	0.0001	-0.02603	0	0.0094	0
54	SLE RA 13	-0.02045	0.00008	-0.06019	0	0.0336	0
54	SLE RA 14	-0.0258	0.00006	-0.06973	0	0.0405	-0.0001
54	SLE RA 15	-0.02593	0.00006	-0.06995	0	0.0407	-0.0001
54	SLE RA 16	-0.00182	0.00009	-0.02475	0	0.0088	0
54	SLE RA 17	-0.02005	0.00007	-0.05891	0	0.0329	0
54	SLE RA 18	-0.02615	0.00006	-0.07085	0	0.0411	-0.0001
54	SLE RA 19	-0.02628	0.00006	-0.07107	0	0.0413	-0.0001
54	SLE RA 20	-0.00217	0.00009	-0.02587	0	0.0093	0
54	SLE RA 21	-0.0204	0.00007	-0.06003	0	0.0335	-0.0001
54	SLE RA 22	-0.0022	0.00009	-0.02642	0	0.0095	0

Nodo	Cont.	Spostamento			Rotazione		
Ind.	N.br.	ux	uy	uz	rx	ry	rz
54	SLE RA 23	-0.02043	0.00007	-0.06058	0	0.0336	-0.0001
54	SLE RA 24	-0.00233	0.00009	-0.02665	0	0.0097	0
54	SLE RA 25	-0.02056	0.00007	-0.06081	0	0.0338	-0.0001
54	SLE RA 26	-0.00165	0.00007	-0.02511	0.0001	0.0087	-0.0001
54	SLE RA 27	-0.01988	0.00005	-0.05927	0.0001	0.0328	-0.0001
54	SLE RA 28	-0.00178	0.00007	-0.02533	0.0001	0.0089	-0.0001
54	SLE RA 29	-0.02001	0.00005	-0.05949	0.0001	0.033	-0.0001
54	SLE RA 30	-0.002	0.00007	-0.02623	0.0001	0.0093	-0.0001
54	SLE RA 31	-0.02023	0.00005	-0.06039	0.0001	0.0334	-0.0001
54	SLE RA 32	-0.00214	0.00007	-0.02645	0.0001	0.0094	-0.0001
54	SLE RA 33	-0.02037	0.00005	-0.06061	0.0001	0.0336	-0.0001
54	SLE FR 1	-0.00138	0.00009	-0.02357	0	0.0081	0
54	SLE FR 2	-0.01961	0.00008	-0.05772	0	0.0322	0
54	SLE FR 3	-0.00151	0.0001	-0.02379	0	0.0083	0
54	SLE FR 4	-0.00152	0.00009	-0.02401	0	0.0083	0
54	SLE FR 5	-0.00149	0.00008	-0.02418	0	0.0083	0
54	SLE QP 1	-0.00138	0.00009	-0.02357	0	0.0081	0
54	SLO 1	-0.01098	-0.00208	-0.0151	0.2299	0.009	-0.0024
54	SLO 2	-0.01098	-0.00208	-0.0151	0.2299	0.009	-0.0024
54	SLO 3	-0.01098	0.00225	-0.0151	-0.23	0.009	0.0023
54	SLO 4	-0.01098	0.00225	-0.0151	-0.23	0.009	0.0023
54	SLO 5	-0.00426	-0.00713	-0.02103	0.7666	0.0084	-0.0078
54	SLO 6	-0.00426	-0.00713	-0.02103	0.7666	0.0084	-0.0078
54	SLO 7	-0.00426	0.00731	-0.02103	-0.7666	0.0084	0.0077
54	SLO 8	-0.00426	0.00731	-0.02103	-0.7666	0.0084	0.0077
54	SLO 9	0.0015	-0.00712	-0.02611	0.7666	0.0078	-0.0078
54	SLO 10	0.0015	-0.00712	-0.02611	0.7666	0.0078	-0.0078
54	SLO 11	0.0015	0.00731	-0.02611	-0.7666	0.0078	0.0077
54	SLO 12	0.0015	0.00731	-0.02611	-0.7666	0.0078	0.0077
54	SLO 13	0.00821	-0.00206	-0.03204	0.23	0.0071	-0.0024
54	SLO 14	0.00821	-0.00206	-0.03204	0.23	0.0071	-0.0024
54	SLO 15	0.00821	0.00227	-0.03204	-0.23	0.0071	0.0023
54	SLO 16	0.00821	0.00227	-0.03204	-0.23	0.0071	0.0023
54	SLD 1	-0.00927	-0.00191	-0.0166	0.2125	0.0089	-0.0022
54	SLD 2	-0.00927	-0.00191	-0.0166	0.2125	0.0089	-0.0022
54	SLD 3	-0.00927	0.00209	-0.0166	-0.2125	0.0089	0.0021
54	SLD 4	-0.00927	0.00209	-0.0166	-0.2125	0.0089	0.0021
54	SLD 5	-0.00375	-0.00658	-0.02148	0.7083	0.0083	-0.0072
54	SLD 6	-0.00375	-0.00658	-0.02148	0.7083	0.0083	-0.0072
54	SLD 7	-0.00375	0.00676	-0.02148	-0.7083	0.0083	0.0072
54	SLD 8	-0.00375	0.00676	-0.02148	-0.7083	0.0083	0.0072
54	SLD 9	0.00098	-0.00657	-0.02566	0.7083	0.0079	-0.0072
54	SLD 10	0.00098	-0.00657	-0.02566	0.7083	0.0079	-0.0072
54	SLD 11	0.00098	0.00676	-0.02566	-0.7083	0.0079	0.0072
54	SLD 12	0.00098	0.00676	-0.02566	-0.7083	0.0079	0.0072
54	SLD 13	0.00651	-0.0019	-0.03053	0.2125	0.0073	-0.0022
54	SLD 14	0.00651	-0.0019	-0.03053	0.2125	0.0073	-0.0022
54	SLD 15	0.00651	0.0021	-0.03053	-0.2125	0.0073	0.0021
54	SLD 16	0.00651	0.0021	-0.03053	-0.2125	0.0073	0.0021
54	SLV 1	-0.01838	-0.0052	-0.00856	0.5604	0.0098	-0.0057
54	SLV 2	-0.01838	-0.0052	-0.00856	0.5604	0.0098	-0.0057
54	SLV 3	-0.01838	0.00535	-0.00856	-0.5605	0.0098	0.0056
54	SLV 4	-0.01838	0.00535	-0.00856	-0.5605	0.0098	0.0056
54	SLV 5	-0.00648	-0.0175	-0.01906	1.8682	0.0086	-0.019
54	SLV 6	-0.00648	-0.0175	-0.01906	1.8682	0.0086	-0.019
54	SLV 7	-0.00648	0.01768	-0.01906	-1.8682	0.0086	0.0189
54	SLV 8	-0.00648	0.01768	-0.01906	-1.8682	0.0086	0.0189
54	SLV 9	0.00372	-0.01749	-0.02807	1.8682	0.0076	-0.019
54	SLV 10	0.00372	-0.01749	-0.02807	1.8682	0.0076	-0.019
54	SLV 11	0.00372	0.01769	-0.02807	-1.8682	0.0076	0.0189
54	SLV 12	0.00372	0.01769	-0.02807	-1.8682	0.0076	0.0189
54	SLV 13	0.01562	-0.00517	-0.03857	0.5605	0.0064	-0.0057
54	SLV 14	0.01562	-0.00517	-0.03857	0.5605	0.0064	-0.0057
54	SLV 15	0.01562	0.00539	-0.03857	-0.5604	0.0064	0.0057
54	SLV 16	0.01562	0.00539	-0.03857	-0.5604	0.0064	0.0057
55	SLU 1	0.00138	0.00009	-0.02357	0	-0.0081	0
55	SLU 2	0.03784	0.00006	-0.09188	-0.0001	-0.0564	0.0001
55	SLU 3	0.03804	0.00006	-0.09222	-0.0001	-0.0566	0.0001
55	SLU 4	0.00188	0.0001	-0.02441	0	-0.0087	0
55	SLU 5	0.02922	0.00007	-0.07565	-0.0001	-0.0449	0
55	SLU 6	0.03838	0.00006	-0.09356	-0.0001	-0.0573	0.0001
55	SLU 7	0.03858	0.00006	-0.0939	-0.0001	-0.0575	0.0001
55	SLU 8	0.00241	0.0001	-0.02609	0	-0.0096	0
55	SLU 9	0.02976	0.00008	-0.07733	-0.0001	-0.0458	0
55	SLU 10	0.00245	0.0001	-0.02692	0	-0.0098	0
55	SLU 11	0.0298	0.00007	-0.07815	0	-0.046	0.0001
55	SLU 12	0.00265	0.0001	-0.02725	0	-0.0101	0
55	SLU 13	0.03	0.00007	-0.07849	-0.0001	-0.0463	0.0001
55	SLU 14	0.03801	0.00004	-0.0928	0	-0.0568	0.0001
55	SLU 15	0.03821	0.00005	-0.09314	0	-0.057	0.0001
55	SLU 16	0.00205	0.00008	-0.02533	0	-0.0091	0
55	SLU 17	0.02939	0.00006	-0.07657	0	-0.0453	0.0001
55	SLU 18	0.03855	0.00005	-0.09447	0	-0.0576	0.0001
55	SLU 19	0.03875	0.00005	-0.09481	0	-0.0579	0.0001
55	SLU 20	0.00258	0.00008	-0.02701	0	-0.01	0
55	SLU 21	0.02993	0.00006	-0.07824	0	-0.0462	0.0001
55	SLU 22	0.00262	0.00008	-0.02783	0.0001	-0.0102	0
55	SLU 23	0.02997	0.00006	-0.07907	0	-0.0464	0.0001
55	SLU 24	0.00282	0.00008	-0.02817	0	-0.0104	0
55	SLU 25	0.03017	0.00006	-0.07941	0	-0.0467	0.0001
55	SLU 26	0.00181	0.00005	-0.02586	0.0002	-0.009	0.0001
55	SLU 27	0.02915	0.00003	-0.07709	0.0001	-0.0452	0.0001
55	SLU 28	0.00201	0.00005	-0.0262	0.0002	-0.0093	0.0001
55	SLU 29	0.02935	0.00003	-0.07743	0.0001	-0.0455	0.0001
55	SLU 30	0.00234	0.00005	-0.02753	0.0002	-0.0099	0.0001

Nodo	Cont.	Spostamento			Rotazione		
Ind.	N.br.	ux	uy	uz	rx	ry	rz
55	SLU 31	0.02969	0.00003	-0.07877	0.0001	-0.0461	0.0001
55	SLU 32	0.00254	0.00006	-0.02787	0.0002	-0.0101	0.0001
55	SLU 33	0.02989	0.00003	-0.07911	0.0001	-0.0463	0.0001
55	SLU 34	0.00138	0.00009	-0.02357	0	-0.0081	0
55	SLU 35	0.03784	0.00006	-0.09188	-0.0001	-0.0564	0.0001
55	SLU 36	0.03804	0.00006	-0.09222	-0.0001	-0.0566	0.0001
55	SLU 37	0.00188	0.0001	-0.02441	0	-0.0087	0
55	SLU 38	0.02922	0.00007	-0.07565	-0.0001	-0.0449	0
55	SLU 39	0.03838	0.00006	-0.09356	-0.0001	-0.0573	0.0001
55	SLU 40	0.03858	0.00006	-0.0939	-0.0001	-0.0575	0.0001
55	SLU 41	0.00241	0.0001	-0.02609	0	-0.0096	0
55	SLU 42	0.02976	0.00008	-0.07733	-0.0001	-0.0458	0
55	SLU 43	0.00245	0.0001	-0.02692	0	-0.0098	0
55	SLU 44	0.0298	0.00007	-0.07815	0	-0.046	0.0001
55	SLU 45	0.00265	0.0001	-0.02725	0	-0.0101	0
55	SLU 46	0.03	0.00007	-0.07849	-0.0001	-0.0463	0.0001
55	SLU 47	0.03801	0.00004	-0.0928	0	-0.0568	0.0001
55	SLU 48	0.03821	0.00005	-0.09314	0	-0.057	0.0001
55	SLU 49	0.00205	0.00008	-0.02533	0	-0.0091	0
55	SLU 50	0.02939	0.00006	-0.07657	0	-0.0453	0.0001
55	SLU 51	0.03855	0.00005	-0.09447	0	-0.0576	0.0001
55	SLU 52	0.03875	0.00005	-0.09481	0	-0.0579	0.0001
55	SLU 53	0.00258	0.00008	-0.02701	0	-0.01	0
55	SLU 54	0.02993	0.00006	-0.07824	0	-0.0462	0.0001
55	SLU 55	0.00262	0.00008	-0.02783	0.0001	-0.0102	0
55	SLU 56	0.02997	0.00006	-0.07907	0	-0.0464	0.0001
55	SLU 57	0.00282	0.00008	-0.02817	0	-0.0104	0
55	SLU 58	0.03017	0.00006	-0.07941	0	-0.0467	0.0001
55	SLU 59	0.00181	0.00005	-0.02586	0.0002	-0.009	0.0001
55	SLU 60	0.02915	0.00003	-0.07709	0.0001	-0.0452	0.0001
55	SLU 61	0.00201	0.00005	-0.0262	0.0002	-0.0093	0.0001
55	SLU 62	0.02935	0.00003	-0.07743	0.0001	-0.0455	0.0001
55	SLU 63	0.00234	0.00005	-0.02753	0.0002	-0.0099	0.0001
55	SLU 64	0.02969	0.00003	-0.07877	0.0001	-0.0461	0.0001
55	SLU 65	0.00254	0.00006	-0.02787	0.0002	-0.0101	0.0001
55	SLU 66	0.02989	0.00003	-0.07911	0.0001	-0.0463	0.0001
55	SLU 67	0.0018	0.00012	-0.03064	0	-0.0105	0
55	SLU 68	0.03826	0.00009	-0.09895	-0.0001	-0.0588	0.0001
55	SLU 69	0.03846	0.00009	-0.09929	-0.0001	-0.0591	0.0001
55	SLU 70	0.00229	0.00013	-0.03148	0	-0.0112	0
55	SLU 71	0.02964	0.0001	-0.08272	-0.0001	-0.0474	0.0001
55	SLU 72	0.03879	0.00009	-0.10063	-0.0001	-0.0597	0.0001
55	SLU 73	0.03899	0.00009	-0.10097	-0.0001	-0.0599	0.0001
55	SLU 74	0.00283	0.00013	-0.03316	0	-0.012	0
55	SLU 75	0.03017	0.0001	-0.0844	-0.0001	-0.0482	0.0001
55	SLU 76	0.00287	0.00013	-0.03399	0	-0.0122	0.0001
55	SLU 77	0.03021	0.0001	-0.08522	-0.0001	-0.0485	0.0001
55	SLU 78	0.00307	0.00013	-0.03432	0	-0.0125	0.0001
55	SLU 79	0.03041	0.0001	-0.08556	-0.0001	-0.0487	0.0001
55	SLU 80	0.03843	0.00007	-0.09987	0	-0.0592	0.0001
55	SLU 81	0.03863	0.00007	-0.10021	0	-0.0594	0.0001
55	SLU 82	0.00246	0.00011	-0.0324	0	-0.0115	0.0001
55	SLU 83	0.02981	0.00009	-0.08364	0	-0.0477	0.0001
55	SLU 84	0.03896	0.00007	-0.10154	0	-0.06	0.0001
55	SLU 85	0.03916	0.00008	-0.10188	0	-0.0603	0.0001
55	SLU 86	0.003	0.00011	-0.03407	0	-0.0124	0.0001
55	SLU 87	0.03034	0.00009	-0.08531	0	-0.0486	0.0001
55	SLU 88	0.00304	0.00011	-0.0349	0.0001	-0.0126	0.0001
55	SLU 89	0.03038	0.00008	-0.08614	0	-0.0488	0.0001
55	SLU 90	0.00324	0.00011	-0.03524	0	-0.0129	0.0001
55	SLU 91	0.03058	0.00009	-0.08648	0	-0.0491	0.0001
55	SLU 92	0.00222	0.00008	-0.03293	0.0002	-0.0114	0.0001
55	SLU 93	0.02957	0.00005	-0.08416	0.0001	-0.0476	0.0001
55	SLU 94	0.00242	0.00008	-0.03327	0.0002	-0.0117	0.0001
55	SLU 95	0.02977	0.00006	-0.0845	0.0001	-0.0479	0.0001
55	SLU 96	0.00276	0.00008	-0.0346	0.0002	-0.0123	0.0001
55	SLU 97	0.0301	0.00006	-0.08584	0.0001	-0.0485	0.0001
55	SLU 98	0.00296	0.00008	-0.03494	0.0002	-0.0125	0.0001
55	SLU 99	0.0303	0.00006	-0.08618	0.0001	-0.0488	0.0001
55	SLU 100	0.0018	0.00012	-0.03064	0	-0.0105	0
55	SLU 101	0.03826	0.00009	-0.09895	-0.0001	-0.0588	0.0001
55	SLU 102	0.03846	0.00009	-0.09929	-0.0001	-0.0591	0.0001
55	SLU 103	0.00229	0.00013	-0.03148	0	-0.0112	0
55	SLU 104	0.02964	0.0001	-0.08272	-0.0001	-0.0474	0.0001
55	SLU 105	0.03879	0.00009	-0.10063	-0.0001	-0.0597	0.0001
55	SLU 106	0.03899	0.00009	-0.10097	-0.0001	-0.0599	0.0001
55	SLU 107	0.00283	0.00013	-0.03316	0	-0.012	0
55	SLU 108	0.03017	0.0001	-0.0844	-0.0001	-0.0482	0.0001
55	SLU 109	0.00287	0.00013	-0.03399	0	-0.0122	0.0001
55	SLU 110	0.03021	0.0001	-0.08522	-0.0001	-0.0485	0.0001
55	SLU 111	0.00307	0.00013	-0.03432	0	-0.0125	0.0001
55	SLU 112	0.03041	0.0001	-0.08556	-0.0001	-0.0487	0.0001
55	SLU 113	0.03843	0.00007	-0.09987	0	-0.0592	0.0001
55	SLU 114	0.03863	0.00007	-0.10021	0	-0.0594	0.0001
55	SLU 115	0.00246	0.00011	-0.0324	0	-0.0115	0.0001
55	SLU 116	0.02981	0.00009	-0.08364	0	-0.0477	0.0001
55	SLU 117	0.03896	0.00007	-0.10154	0	-0.06	0.0001
55	SLU 118	0.03916	0.00008	-0.10188	0	-0.0603	0.0001
55	SLU 119	0.003	0.00011	-0.03407	0	-0.0124	0.0001
55	SLU 120	0.03034	0.00009	-0.08531	0	-0.0486	0.0001
55	SLU 121	0.00304	0.00011	-0.0349	0.0001	-0.0126	0.0001
55	SLU 122	0.03038	0.00008	-0.08614	0	-0.0488	0.0001
55	SLU 123	0.00324	0.00011	-0.03524	0	-0.0129	0.0001
55	SLU 124	0.03058	0.00009	-0.08648	0	-0.0491	0.0001
55	SLU 125	0.00222	0.00008	-0.03293	0.0002	-0.0114	0.0001

Nodo	Cont.	Spostamento			Rotazione		
Ind.	N.br.	ux	uy	uz	rx	ry	rz
55	SLU 126	0.02957	0.00005	-0.08416	0.0001	-0.0476	0.0001
55	SLU 127	0.00242	0.00008	-0.03327	0.0002	-0.0117	0.0001
55	SLU 128	0.02977	0.00006	-0.0845	0.0001	-0.0479	0.0001
55	SLU 129	0.00276	0.00008	-0.0346	0.0002	-0.0123	0.0001
55	SLU 130	0.0301	0.00006	-0.08584	0.0001	-0.0485	0.0001
55	SLU 131	0.00296	0.00008	-0.03494	0.0002	-0.0125	0.0001
55	SLU 132	0.0303	0.00006	-0.08618	0.0001	-0.0488	0.0001
55	SLE RA 1	0.00138	0.00009	-0.02357	0	-0.0081	0
55	SLE RA 2	0.02569	0.00007	-0.06911	0	-0.0403	0
55	SLE RA 3	0.02582	0.00007	-0.06934	0	-0.0405	0
55	SLE RA 4	0.00171	0.0001	-0.02413	0	-0.0085	0
55	SLE RA 5	0.01994	0.00008	-0.05829	0	-0.0327	0
55	SLE RA 6	0.02605	0.00007	-0.07023	0	-0.0409	0
55	SLE RA 7	0.02618	0.00007	-0.07045	0	-0.041	0
55	SLE RA 8	0.00207	0.0001	-0.02525	0	-0.0091	0
55	SLE RA 9	0.0203	0.00008	-0.05941	0	-0.0332	0
55	SLE RA 10	0.0021	0.0001	-0.0258	0	-0.0092	0
55	SLE RA 11	0.02033	0.00008	-0.05996	0	-0.0334	0
55	SLE RA 12	0.00223	0.0001	-0.02603	0	-0.0094	0
55	SLE RA 13	0.02046	0.00008	-0.06018	0	-0.0336	0
55	SLE RA 14	0.0258	0.00006	-0.06972	0	-0.0405	0.0001
55	SLE RA 15	0.02594	0.00006	-0.06995	0	-0.0407	0.0001
55	SLE RA 16	0.00183	0.00009	-0.02474	0	-0.0088	0
55	SLE RA 17	0.02006	0.00007	-0.0589	0	-0.0329	0
55	SLE RA 18	0.02616	0.00006	-0.07084	0	-0.0411	0.0001
55	SLE RA 19	0.02629	0.00006	-0.07106	0	-0.0413	0.0001
55	SLE RA 20	0.00218	0.00009	-0.02586	0	-0.0093	0
55	SLE RA 21	0.02041	0.00007	-0.06002	0	-0.0335	0.0001
55	SLE RA 22	0.00221	0.00009	-0.02641	0	-0.0095	0
55	SLE RA 23	0.02044	0.00007	-0.06057	0	-0.0336	0.0001
55	SLE RA 24	0.00234	0.00009	-0.02664	0	-0.0097	0
55	SLE RA 25	0.02057	0.00007	-0.06079	0	-0.0338	0.0001
55	SLE RA 26	0.00167	0.00007	-0.02509	0.0001	-0.0087	0.0001
55	SLE RA 27	0.0199	0.00005	-0.05925	0.0001	-0.0328	0.0001
55	SLE RA 28	0.0018	0.00007	-0.02532	0.0001	-0.0089	0.0001
55	SLE RA 29	0.02003	0.00005	-0.05948	0.0001	-0.033	0.0001
55	SLE RA 30	0.00202	0.00007	-0.02621	0.0001	-0.0093	0.0001
55	SLE RA 31	0.02025	0.00005	-0.06037	0.0001	-0.0334	0.0001
55	SLE RA 32	0.00216	0.00007	-0.02644	0.0001	-0.0094	0.0001
55	SLE RA 33	0.02039	0.00005	-0.06059	0.0001	-0.0336	0.0001
55	SLE FR 1	0.00138	0.00009	-0.02357	0	-0.0081	0
55	SLE FR 2	0.01961	0.00008	-0.05772	0	-0.0322	0
55	SLE FR 3	0.00151	0.0001	-0.02379	0	-0.0083	0
55	SLE FR 4	0.00153	0.00009	-0.02401	0	-0.0083	0
55	SLE FR 5	0.0015	0.00008	-0.02418	0	-0.0083	0
55	SLE QP 1	0.00138	0.00009	-0.02357	0	-0.0081	0
55	SLO 1	-0.00821	-0.00206	-0.03204	0.23	-0.0071	0.0024
55	SLO 2	-0.00821	-0.00206	-0.03204	0.23	-0.0071	0.0024
55	SLO 3	-0.00821	0.00227	-0.03204	-0.23	-0.0071	-0.0023
55	SLO 4	-0.00821	0.00227	-0.03204	-0.23	-0.0071	-0.0023
55	SLO 5	-0.0015	-0.00712	-0.02611	0.7666	-0.0078	0.0078
55	SLO 6	-0.0015	-0.00712	-0.02611	0.7666	-0.0078	0.0078
55	SLO 7	-0.0015	0.00731	-0.02611	-0.7666	-0.0078	-0.0077
55	SLO 8	-0.0015	0.00731	-0.02611	-0.7666	-0.0078	-0.0077
55	SLO 9	0.00426	-0.00713	-0.02103	0.7666	-0.0084	0.0078
55	SLO 10	0.00426	-0.00713	-0.02103	0.7666	-0.0084	0.0078
55	SLO 11	0.00426	0.00731	-0.02103	-0.7666	-0.0084	-0.0077
55	SLO 12	0.00426	0.00731	-0.02103	-0.7666	-0.0084	-0.0077
55	SLO 13	0.01098	-0.00208	-0.0151	0.2299	-0.009	0.0024
55	SLO 14	0.01098	-0.00208	-0.0151	0.2299	-0.009	0.0024
55	SLO 15	0.01098	0.00225	-0.0151	-0.23	-0.009	-0.0023
55	SLO 16	0.01098	0.00225	-0.0151	-0.23	-0.009	-0.0023
55	SLD 1	-0.00651	-0.0019	-0.03053	0.2125	-0.0073	0.0022
55	SLD 2	-0.00651	-0.0019	-0.03053	0.2125	-0.0073	0.0022
55	SLD 3	-0.00651	0.0021	-0.03053	-0.2125	-0.0073	-0.0021
55	SLD 4	-0.00651	0.0021	-0.03053	-0.2125	-0.0073	-0.0021
55	SLD 5	-0.00098	-0.00657	-0.02566	0.7083	-0.0079	0.0072
55	SLD 6	-0.00098	-0.00657	-0.02566	0.7083	-0.0079	0.0072
55	SLD 7	-0.00098	0.00676	-0.02566	-0.7083	-0.0079	-0.0072
55	SLD 8	-0.00098	0.00676	-0.02566	-0.7083	-0.0079	-0.0072
55	SLD 9	0.00375	-0.00658	-0.02148	0.7083	-0.0083	0.0072
55	SLD 10	0.00375	-0.00658	-0.02148	0.7083	-0.0083	0.0072
55	SLD 11	0.00375	0.00676	-0.02148	-0.7083	-0.0083	-0.0072
55	SLD 12	0.00375	0.00676	-0.02148	-0.7083	-0.0083	-0.0072
55	SLD 13	0.00927	-0.00191	-0.0166	0.2125	-0.0089	0.0022
55	SLD 14	0.00927	-0.00191	-0.0166	0.2125	-0.0089	0.0022
55	SLD 15	0.00927	0.00209	-0.0166	-0.2125	-0.0089	-0.0021
55	SLD 16	0.00927	0.00209	-0.0166	-0.2125	-0.0089	-0.0021
55	SLV 1	-0.01562	-0.00517	-0.03857	0.5605	-0.0064	0.0057
55	SLV 2	-0.01562	-0.00517	-0.03857	0.5605	-0.0064	0.0057
55	SLV 3	-0.01562	0.00539	-0.03857	-0.5604	-0.0064	-0.0057
55	SLV 4	-0.01562	0.00539	-0.03857	-0.5604	-0.0064	-0.0057
55	SLV 5	-0.00372	-0.01749	-0.02807	1.8682	-0.0076	0.019
55	SLV 6	-0.00372	-0.01749	-0.02807	1.8682	-0.0076	0.019
55	SLV 7	-0.00372	0.01769	-0.02807	-1.8682	-0.0076	-0.0189
55	SLV 8	-0.00372	0.01769	-0.02807	-1.8682	-0.0076	-0.0189
55	SLV 9	0.00648	-0.0175	-0.01906	1.8682	-0.0086	0.019
55	SLV 10	0.00648	-0.0175	-0.01906	1.8682	-0.0086	0.019
55	SLV 11	0.00648	0.01768	-0.01906	-1.8682	-0.0086	-0.0189
55	SLV 12	0.00648	0.01768	-0.01906	-1.8682	-0.0086	-0.0189
55	SLV 13	0.01838	-0.0052	-0.00856	0.5604	-0.0098	0.0057
55	SLV 14	0.01838	-0.0052	-0.00856	0.5604	-0.0098	0.0057
55	SLV 15	0.01838	0.00535	-0.00856	-0.5605	-0.0098	-0.0056
55	SLV 16	0.01838	0.00535	-0.00856	-0.5605	-0.0098	-0.0056
56	SLU 1	0.00422	0.00019	-0.00754	-0.0003	-0.0051	0.0004

Nodo	Cont.	Spostamento			Rotazione		
Ind.	N.br.	ux	uy	uz	rx	ry	rz
56	SLU 2	0.06066	0.00019	-0.00126	-0.0003	-0.0185	0.0005
56	SLU 3	0.06096	0.00019	-0.00121	-0.0003	-0.0186	0.0005
56	SLU 4	0.00498	0.00019	-0.00743	-0.0003	-0.0052	0.0004
56	SLU 5	0.0473	0.00019	-0.00272	-0.0003	-0.0153	0.0004
56	SLU 6	0.0616	0.00019	-0.00139	-0.0003	-0.0189	0.0005
56	SLU 7	0.0619	0.0002	-0.00135	-0.0003	-0.019	0.0005
56	SLU 8	0.00591	0.0002	-0.00757	-0.0003	-0.0056	0.0004
56	SLU 9	0.04824	0.0002	-0.00285	-0.0003	-0.0157	0.0005
56	SLU 10	0.0061	0.0002	-0.00781	-0.0003	-0.0058	0.0004
56	SLU 11	0.04843	0.0002	-0.0031	-0.0003	-0.0159	0.0005
56	SLU 12	0.0064	0.0002	-0.00777	-0.0003	-0.0059	0.0004
56	SLU 13	0.04873	0.0002	-0.00305	-0.0003	-0.016	0.0005
56	SLU 14	0.06102	0.00019	-0.00143	-0.0004	-0.0188	0.0007
56	SLU 15	0.06132	0.0002	-0.00139	-0.0004	-0.0188	0.0007
56	SLU 16	0.00533	0.0002	-0.00761	-0.0004	-0.0055	0.0006
56	SLU 17	0.04766	0.0002	-0.00289	-0.0004	-0.0156	0.0006
56	SLU 18	0.06196	0.0002	-0.00156	-0.0004	-0.0191	0.0007
56	SLU 19	0.06226	0.0002	-0.00152	-0.0004	-0.0192	0.0007
56	SLU 20	0.00627	0.00021	-0.00774	-0.0004	-0.0058	0.0006
56	SLU 21	0.0486	0.00021	-0.00302	-0.0004	-0.0159	0.0006
56	SLU 22	0.00646	0.00021	-0.00798	-0.0004	-0.0061	0.0006
56	SLU 23	0.04879	0.00021	-0.00327	-0.0004	-0.0161	0.0007
56	SLU 24	0.00676	0.00021	-0.00794	-0.0004	-0.0061	0.0006
56	SLU 25	0.04909	0.00021	-0.00323	-0.0004	-0.0162	0.0007
56	SLU 26	0.00512	0.0002	-0.00798	-0.0005	-0.0056	0.0009
56	SLU 27	0.04745	0.0002	-0.00326	-0.0005	-0.0157	0.0009
56	SLU 28	0.00542	0.0002	-0.00793	-0.0005	-0.0057	0.0009
56	SLU 29	0.04775	0.0002	-0.00322	-0.0005	-0.0158	0.0009
56	SLU 30	0.00606	0.00021	-0.00811	-0.0005	-0.006	0.0009
56	SLU 31	0.04839	0.00021	-0.0034	-0.0005	-0.0161	0.0009
56	SLU 32	0.00636	0.00021	-0.00807	-0.0005	-0.0061	0.0009
56	SLU 33	0.04869	0.00021	-0.00335	-0.0005	-0.0162	0.0009
56	SLU 34	0.00422	0.00019	-0.00754	-0.0003	-0.0051	0.0004
56	SLU 35	0.06066	0.00019	-0.00126	-0.0003	-0.0185	0.0005
56	SLU 36	0.06096	0.00019	-0.00121	-0.0003	-0.0186	0.0005
56	SLU 37	0.00498	0.00019	-0.00743	-0.0003	-0.0052	0.0004
56	SLU 38	0.0473	0.00019	-0.00272	-0.0003	-0.0153	0.0004
56	SLU 39	0.0616	0.00019	-0.00139	-0.0003	-0.0189	0.0005
56	SLU 40	0.0619	0.0002	-0.00135	-0.0003	-0.019	0.0005
56	SLU 41	0.00591	0.0002	-0.00757	-0.0003	-0.0056	0.0004
56	SLU 42	0.04824	0.0002	-0.00285	-0.0003	-0.0157	0.0005
56	SLU 43	0.0061	0.0002	-0.00781	-0.0003	-0.0058	0.0004
56	SLU 44	0.04843	0.0002	-0.0031	-0.0003	-0.0159	0.0005
56	SLU 45	0.0064	0.0002	-0.00777	-0.0003	-0.0059	0.0004
56	SLU 46	0.04873	0.0002	-0.00305	-0.0003	-0.016	0.0005
56	SLU 47	0.06102	0.00019	-0.00143	-0.0004	-0.0188	0.0007
56	SLU 48	0.06132	0.0002	-0.00139	-0.0004	-0.0188	0.0007
56	SLU 49	0.00533	0.0002	-0.00761	-0.0004	-0.0055	0.0006
56	SLU 50	0.04766	0.0002	-0.00289	-0.0004	-0.0156	0.0006
56	SLU 51	0.06196	0.0002	-0.00156	-0.0004	-0.0191	0.0007
56	SLU 52	0.06226	0.0002	-0.00152	-0.0004	-0.0192	0.0007
56	SLU 53	0.00627	0.00021	-0.00774	-0.0004	-0.0058	0.0006
56	SLU 54	0.0486	0.00021	-0.00302	-0.0004	-0.0159	0.0006
56	SLU 55	0.00646	0.00021	-0.00798	-0.0004	-0.0061	0.0006
56	SLU 56	0.04879	0.00021	-0.00327	-0.0004	-0.0161	0.0007
56	SLU 57	0.00676	0.00021	-0.00794	-0.0004	-0.0061	0.0006
56	SLU 58	0.04909	0.00021	-0.00323	-0.0004	-0.0162	0.0007
56	SLU 59	0.00512	0.0002	-0.00798	-0.0005	-0.0056	0.0009
56	SLU 60	0.04745	0.0002	-0.00326	-0.0005	-0.0157	0.0009
56	SLU 61	0.00542	0.0002	-0.00793	-0.0005	-0.0057	0.0009
56	SLU 62	0.04775	0.0002	-0.00322	-0.0005	-0.0158	0.0009
56	SLU 63	0.00606	0.00021	-0.00811	-0.0005	-0.006	0.0009
56	SLU 64	0.04839	0.00021	-0.0034	-0.0005	-0.0161	0.0009
56	SLU 65	0.00636	0.00021	-0.00807	-0.0005	-0.0061	0.0009
56	SLU 66	0.04869	0.00021	-0.00335	-0.0005	-0.0162	0.0009
56	SLU 67	0.00549	0.00024	-0.00981	-0.0004	-0.0066	0.0005
56	SLU 68	0.06193	0.00024	-0.00352	-0.0004	-0.0201	0.0006
56	SLU 69	0.06223	0.00025	-0.00348	-0.0004	-0.0201	0.0006
56	SLU 70	0.00624	0.00025	-0.00969	-0.0004	-0.0068	0.0005
56	SLU 71	0.04857	0.00025	-0.00498	-0.0004	-0.0169	0.0006
56	SLU 72	0.06287	0.00025	-0.00365	-0.0004	-0.0204	0.0006
56	SLU 73	0.06317	0.00025	-0.00361	-0.0004	-0.0205	0.0006
56	SLU 74	0.00718	0.00026	-0.00983	-0.0004	-0.0071	0.0005
56	SLU 75	0.04951	0.00026	-0.00511	-0.0004	-0.0172	0.0006
56	SLU 76	0.00737	0.00026	-0.01007	-0.0004	-0.0074	0.0006
56	SLU 77	0.04969	0.00026	-0.00536	-0.0004	-0.0174	0.0006
56	SLU 78	0.00767	0.00026	-0.01003	-0.0004	-0.0074	0.0006
56	SLU 79	0.05	0.00026	-0.00532	-0.0004	-0.0175	0.0006
56	SLU 80	0.06229	0.00025	-0.00369	-0.0005	-0.0203	0.0008
56	SLU 81	0.06259	0.00025	-0.00365	-0.0005	-0.0203	0.0008
56	SLU 82	0.0066	0.00026	-0.00987	-0.0004	-0.007	0.0007
56	SLU 83	0.04893	0.00026	-0.00515	-0.0005	-0.0171	0.0008
56	SLU 84	0.06322	0.00026	-0.00383	-0.0005	-0.0207	0.0008
56	SLU 85	0.06353	0.00026	-0.00378	-0.0005	-0.0207	0.0008
56	SLU 86	0.00754	0.00026	-0.01	-0.0004	-0.0074	0.0007
56	SLU 87	0.04987	0.00026	-0.00529	-0.0005	-0.0175	0.0008
56	SLU 88	0.00772	0.00026	-0.01025	-0.0005	-0.0076	0.0008
56	SLU 89	0.05005	0.00026	-0.00553	-0.0005	-0.0177	0.0008
56	SLU 90	0.00803	0.00026	-0.0102	-0.0005	-0.0076	0.0007
56	SLU 91	0.05035	0.00027	-0.00549	-0.0005	-0.0177	0.0008
56	SLU 92	0.00639	0.00026	-0.01024	-0.0006	-0.0072	0.001
56	SLU 93	0.04872	0.00026	-0.00552	-0.0006	-0.0172	0.0011
56	SLU 94	0.00669	0.00026	-0.01019	-0.0006	-0.0072	0.001
56	SLU 95	0.04902	0.00026	-0.00548	-0.0006	-0.0173	0.001
56	SLU 96	0.00733	0.00026	-0.01037	-0.0006	-0.0075	0.001

Nodo	Cont.	Spostamento			Rotazione		
Ind.	N.br.	ux	uy	uz	rx	ry	rz
56	SLU 97	0.04965	0.00026	-0.00566	-0.0006	-0.0176	0.0011
56	SLU 98	0.00763	0.00027	-0.01033	-0.0006	-0.0076	0.001
56	SLU 99	0.04996	0.00027	-0.00561	-0.0006	-0.0177	0.0011
56	SLU 100	0.00549	0.00024	-0.00981	-0.0004	-0.0066	0.0005
56	SLU 101	0.06193	0.00024	-0.00352	-0.0004	-0.0201	0.0006
56	SLU 102	0.06223	0.00025	-0.00348	-0.0004	-0.0201	0.0006
56	SLU 103	0.00624	0.00025	-0.00969	-0.0004	-0.0068	0.0005
56	SLU 104	0.04857	0.00025	-0.00498	-0.0004	-0.0169	0.0006
56	SLU 105	0.06287	0.00025	-0.00365	-0.0004	-0.0204	0.0006
56	SLU 106	0.06317	0.00025	-0.00361	-0.0004	-0.0205	0.0006
56	SLU 107	0.00718	0.00026	-0.00983	-0.0004	-0.0071	0.0005
56	SLU 108	0.04951	0.00026	-0.00511	-0.0004	-0.0172	0.0006
56	SLU 109	0.00737	0.00026	-0.01007	-0.0004	-0.0074	0.0006
56	SLU 110	0.04969	0.00026	-0.00536	-0.0004	-0.0174	0.0006
56	SLU 111	0.00767	0.00026	-0.01003	-0.0004	-0.0074	0.0006
56	SLU 112	0.05	0.00026	-0.00532	-0.0004	-0.0175	0.0006
56	SLU 113	0.06229	0.00025	-0.00369	-0.0005	-0.0203	0.0008
56	SLU 114	0.06259	0.00025	-0.00365	-0.0005	-0.0203	0.0008
56	SLU 115	0.0066	0.00026	-0.00987	-0.0004	-0.007	0.0007
56	SLU 116	0.04893	0.00026	-0.00515	-0.0005	-0.0171	0.0008
56	SLU 117	0.06322	0.00026	-0.00383	-0.0005	-0.0207	0.0008
56	SLU 118	0.06353	0.00026	-0.00378	-0.0005	-0.0207	0.0008
56	SLU 119	0.00754	0.00026	-0.01	-0.0004	-0.0074	0.0007
56	SLU 120	0.04987	0.00026	-0.00529	-0.0005	-0.0175	0.0008
56	SLU 121	0.00772	0.00026	-0.01025	-0.0005	-0.0076	0.0008
56	SLU 122	0.05005	0.00026	-0.00553	-0.0005	-0.0177	0.0008
56	SLU 123	0.00803	0.00026	-0.0102	-0.0005	-0.0076	0.0007
56	SLU 124	0.05035	0.00027	-0.00549	-0.0005	-0.0177	0.0008
56	SLU 125	0.00639	0.00026	-0.01024	-0.0006	-0.0072	0.001
56	SLU 126	0.04872	0.00026	-0.00552	-0.0006	-0.0172	0.0011
56	SLU 127	0.00669	0.00026	-0.01019	-0.0006	-0.0072	0.001
56	SLU 128	0.04902	0.00026	-0.00548	-0.0006	-0.0173	0.001
56	SLU 129	0.00733	0.00026	-0.01037	-0.0006	-0.0075	0.001
56	SLU 130	0.04965	0.00026	-0.00566	-0.0006	-0.0176	0.0011
56	SLU 131	0.00763	0.00027	-0.01033	-0.0006	-0.0076	0.001
56	SLU 132	0.04996	0.00027	-0.00561	-0.0006	-0.0177	0.0011
56	SLE RA 1	0.00422	0.00019	-0.00754	-0.0003	-0.0051	0.0004
56	SLE RA 2	0.04185	0.00019	-0.00335	-0.0003	-0.014	0.0005
56	SLE RA 3	0.04205	0.00019	-0.00332	-0.0003	-0.0141	0.0005
56	SLE RA 4	0.00473	0.00019	-0.00747	-0.0003	-0.0052	0.0004
56	SLE RA 5	0.03294	0.00019	-0.00433	-0.0003	-0.0119	0.0004
56	SLE RA 6	0.04247	0.00019	-0.00344	-0.0003	-0.0143	0.0005
56	SLE RA 7	0.04267	0.00019	-0.00341	-0.0003	-0.0143	0.0005
56	SLE RA 8	0.00535	0.0002	-0.00756	-0.0003	-0.0054	0.0004
56	SLE RA 9	0.03357	0.0002	-0.00442	-0.0003	-0.0122	0.0004
56	SLE RA 10	0.00547	0.0002	-0.00772	-0.0003	-0.0056	0.0004
56	SLE RA 11	0.03369	0.0002	-0.00458	-0.0003	-0.0123	0.0005
56	SLE RA 12	0.00567	0.0002	-0.00769	-0.0003	-0.0056	0.0004
56	SLE RA 13	0.03389	0.0002	-0.00455	-0.0003	-0.0123	0.0005
56	SLE RA 14	0.04209	0.00019	-0.00347	-0.0004	-0.0142	0.0006
56	SLE RA 15	0.04229	0.00019	-0.00344	-0.0004	-0.0142	0.0006
56	SLE RA 16	0.00496	0.0002	-0.00758	-0.0003	-0.0053	0.0005
56	SLE RA 17	0.03318	0.0002	-0.00444	-0.0004	-0.0121	0.0006
56	SLE RA 18	0.04271	0.0002	-0.00356	-0.0004	-0.0144	0.0006
56	SLE RA 19	0.04291	0.0002	-0.00353	-0.0004	-0.0145	0.0006
56	SLE RA 20	0.00559	0.0002	-0.00767	-0.0003	-0.0056	0.0005
56	SLE RA 21	0.03381	0.0002	-0.00453	-0.0004	-0.0123	0.0006
56	SLE RA 22	0.00571	0.0002	-0.00784	-0.0003	-0.0057	0.0006
56	SLE RA 23	0.03393	0.0002	-0.00469	-0.0004	-0.0125	0.0006
56	SLE RA 24	0.00591	0.0002	-0.00781	-0.0003	-0.0058	0.0006
56	SLE RA 25	0.03413	0.0002	-0.00466	-0.0004	-0.0125	0.0006
56	SLE RA 26	0.00482	0.0002	-0.00783	-0.0004	-0.0054	0.0007
56	SLE RA 27	0.03304	0.0002	-0.00469	-0.0004	-0.0122	0.0008
56	SLE RA 28	0.00502	0.0002	-0.0078	-0.0004	-0.0055	0.0007
56	SLE RA 29	0.03324	0.0002	-0.00466	-0.0004	-0.0122	0.0008
56	SLE RA 30	0.00545	0.0002	-0.00792	-0.0004	-0.0057	0.0007
56	SLE RA 31	0.03367	0.0002	-0.00478	-0.0004	-0.0124	0.0008
56	SLE RA 32	0.00565	0.0002	-0.00789	-0.0004	-0.0057	0.0007
56	SLE RA 33	0.03387	0.0002	-0.00475	-0.0004	-0.0125	0.0008
56	SLE FR 1	0.00422	0.00019	-0.00754	-0.0003	-0.0051	0.0004
56	SLE FR 2	0.03244	0.00019	-0.0044	-0.0003	-0.0118	0.0005
56	SLE FR 3	0.00442	0.00019	-0.00751	-0.0003	-0.0051	0.0004
56	SLE FR 4	0.00447	0.00019	-0.00758	-0.0003	-0.0052	0.0004
56	SLE FR 5	0.00446	0.00019	-0.00766	-0.0003	-0.0052	0.0005
56	SLE QP 1	0.00422	0.00019	-0.00754	-0.0003	-0.0051	0.0004
56	SLO 1	-0.00573	-0.00003	-0.01188	-0.1098	-0.0085	0.2626
56	SLO 2	-0.00573	-0.00003	-0.01188	-0.1098	-0.0085	0.2626
56	SLO 3	-0.00573	0.00041	-0.01188	0.1093	-0.0085	-0.2618
56	SLO 4	-0.00573	0.00041	-0.01188	0.1093	-0.0085	-0.2618
56	SLO 5	0.00124	-0.00055	-0.00884	-0.3655	-0.0061	0.8745
56	SLO 6	0.00124	-0.00055	-0.00884	-0.3655	-0.0061	0.8745
56	SLO 7	0.00124	0.00093	-0.00884	0.3649	-0.0061	-0.8736
56	SLO 8	0.00124	0.00093	-0.00884	0.3649	-0.0061	-0.8736
56	SLO 9	0.00721	-0.00055	-0.00624	-0.3655	-0.0041	0.8745
56	SLO 10	0.00721	-0.00055	-0.00624	-0.3655	-0.0041	0.8745
56	SLO 11	0.00721	0.00093	-0.00624	0.3649	-0.0041	-0.8736
56	SLO 12	0.00721	0.00093	-0.00624	0.3649	-0.0041	-0.8736
56	SLO 13	0.01418	-0.00004	-0.00321	-0.1098	-0.0017	0.2626
56	SLO 14	0.01418	-0.00004	-0.00321	-0.1098	-0.0017	0.2626
56	SLO 15	0.01418	0.00041	-0.00321	0.1093	-0.0017	-0.2618
56	SLO 16	0.01418	0.00041	-0.00321	0.1093	-0.0017	-0.2618
56	SLD 1	-0.00396	-0.00002	-0.01111	-0.1015	-0.0079	0.2427
56	SLD 2	-0.00396	-0.00002	-0.01111	-0.1015	-0.0079	0.2427
56	SLD 3	-0.00396	0.00039	-0.01111	0.1009	-0.0079	-0.2419
56	SLD 4	-0.00396	0.00039	-0.01111	0.1009	-0.0079	-0.2419

Nodo	Cont.	Spostamento			Rotazione		
Ind.	N.br.	ux	uy	uz	rx	ry	rz
56	SLD 5	0.00177	-0.0005	-0.00861	-0.3377	-0.0059	0.808
56	SLD 6	0.00177	-0.0005	-0.00861	-0.3377	-0.0059	0.808
56	SLD 7	0.00177	0.00087	-0.00861	0.3372	-0.0059	-0.8072
56	SLD 8	0.00177	0.00087	-0.00861	0.3372	-0.0059	-0.8072
56	SLD 9	0.00668	-0.0005	-0.00647	-0.3377	-0.0042	0.808
56	SLD 10	0.00668	-0.0005	-0.00647	-0.3377	-0.0042	0.808
56	SLD 11	0.00668	0.00087	-0.00647	0.3372	-0.0042	-0.8072
56	SLD 12	0.00668	0.00087	-0.00647	0.3372	-0.0042	-0.8072
56	SLD 13	0.01241	-0.00002	-0.00398	-0.1015	-0.0023	0.2427
56	SLD 14	0.01241	-0.00002	-0.00398	-0.1015	-0.0023	0.2427
56	SLD 15	0.01241	0.00039	-0.00398	0.101	-0.0023	-0.2419
56	SLD 16	0.01241	0.00039	-0.00398	0.101	-0.0023	-0.2419
56	SLV 1	-0.01342	-0.00035	-0.01523	-0.2673	-0.0111	0.6394
56	SLV 2	-0.01342	-0.00035	-0.01523	-0.2673	-0.0111	0.6394
56	SLV 3	-0.01342	0.00073	-0.01523	0.2667	-0.0111	-0.6386
56	SLV 4	-0.01342	0.00073	-0.01523	0.2667	-0.0111	-0.6386
56	SLV 5	-0.00107	-0.00162	-0.00985	-0.8903	-0.0069	2.1305
56	SLV 6	-0.00107	-0.00162	-0.00985	-0.8903	-0.0069	2.1305
56	SLV 7	-0.00107	0.00199	-0.00985	0.8897	-0.0069	-2.1296
56	SLV 8	-0.00107	0.00199	-0.00985	0.8897	-0.0069	-2.1296
56	SLV 9	0.00952	-0.00162	-0.00524	-0.8903	-0.0033	2.1305
56	SLV 10	0.00952	-0.00162	-0.00524	-0.8903	-0.0033	2.1305
56	SLV 11	0.00952	0.00199	-0.00524	0.8897	-0.0033	-2.1296
56	SLV 12	0.00952	0.00199	-0.00524	0.8897	-0.0033	-2.1296
56	SLV 13	0.02186	-0.00036	0.00014	-0.2673	0.001	0.6394
56	SLV 14	0.02186	-0.00036	0.00014	-0.2673	0.001	0.6394
56	SLV 15	0.02186	0.00073	0.00014	0.2667	0.001	-0.6386
56	SLV 16	0.02186	0.00073	0.00014	0.2667	0.001	-0.6386
57	SLU 1	-0.0241	0.00059	-0.00778	-0.0009	-0.01	-0.0014
57	SLU 2	-0.0241	0.00059	-0.00778	-0.001	-0.01	-0.0015
57	SLU 3	-0.02619	0.0006	-0.0074	-0.001	-0.011	-0.0015
57	SLU 4	-0.02932	0.00061	-0.00683	-0.0009	-0.0124	-0.0014
57	SLU 5	-0.02932	0.00061	-0.00683	-0.001	-0.0124	-0.0015
57	SLU 6	-0.0274	0.00061	-0.00764	-0.001	-0.0113	-0.0015
57	SLU 7	-0.02948	0.00062	-0.00726	-0.001	-0.0123	-0.0015
57	SLU 8	-0.03261	0.00063	-0.00668	-0.001	-0.0137	-0.0014
57	SLU 9	-0.03262	0.00064	-0.00668	-0.001	-0.0137	-0.0015
57	SLU 10	-0.03069	0.00063	-0.0075	-0.001	-0.0126	-0.0015
57	SLU 11	-0.03069	0.00063	-0.00749	-0.001	-0.0126	-0.0016
57	SLU 12	-0.03277	0.00064	-0.00711	-0.001	-0.0135	-0.0015
57	SLU 13	-0.03278	0.00064	-0.00711	-0.001	-0.0135	-0.0016
57	SLU 14	-0.02664	0.00062	-0.00808	-0.0011	-0.0108	-0.0017
57	SLU 15	-0.02873	0.00062	-0.0077	-0.0011	-0.0118	-0.0017
57	SLU 16	-0.03186	0.00064	-0.00713	-0.001	-0.0132	-0.0016
57	SLU 17	-0.03186	0.00064	-0.00713	-0.0011	-0.0132	-0.0017
57	SLU 18	-0.02993	0.00064	-0.00794	-0.0011	-0.0121	-0.0018
57	SLU 19	-0.03202	0.00064	-0.00755	-0.0011	-0.0131	-0.0018
57	SLU 20	-0.03515	0.00066	-0.00698	-0.0011	-0.0145	-0.0017
57	SLU 21	-0.03516	0.00066	-0.00698	-0.0011	-0.0145	-0.0017
57	SLU 22	-0.03322	0.00066	-0.00779	-0.0011	-0.0134	-0.0017
57	SLU 23	-0.03323	0.00066	-0.00779	-0.0011	-0.0134	-0.0018
57	SLU 24	-0.03531	0.00066	-0.00741	-0.0011	-0.0144	-0.0017
57	SLU 25	-0.03532	0.00067	-0.00741	-0.0012	-0.0144	-0.0018
57	SLU 26	-0.03045	0.00065	-0.00853	-0.0012	-0.012	-0.0019
57	SLU 27	-0.03045	0.00065	-0.00853	-0.0012	-0.012	-0.002
57	SLU 28	-0.03253	0.00066	-0.00815	-0.0012	-0.013	-0.0019
57	SLU 29	-0.03254	0.00066	-0.00815	-0.0012	-0.013	-0.002
57	SLU 30	-0.03374	0.00067	-0.00839	-0.0012	-0.0133	-0.002
57	SLU 31	-0.03374	0.00067	-0.00839	-0.0013	-0.0133	-0.0021
57	SLU 32	-0.03583	0.00068	-0.008	-0.0012	-0.0143	-0.002
57	SLU 33	-0.03583	0.00068	-0.008	-0.0013	-0.0143	-0.0021
57	SLU 34	-0.0241	0.00059	-0.00778	-0.0009	-0.01	-0.0014
57	SLU 35	-0.0241	0.00059	-0.00778	-0.001	-0.01	-0.0015
57	SLU 36	-0.02619	0.0006	-0.0074	-0.001	-0.011	-0.0015
57	SLU 37	-0.02932	0.00061	-0.00683	-0.0009	-0.0124	-0.0014
57	SLU 38	-0.02932	0.00061	-0.00683	-0.001	-0.0124	-0.0015
57	SLU 39	-0.0274	0.00061	-0.00764	-0.001	-0.0113	-0.0015
57	SLU 40	-0.02948	0.00062	-0.00726	-0.001	-0.0123	-0.0015
57	SLU 41	-0.03261	0.00063	-0.00668	-0.001	-0.0137	-0.0014
57	SLU 42	-0.03262	0.00064	-0.00668	-0.001	-0.0137	-0.0015
57	SLU 43	-0.03069	0.00063	-0.0075	-0.001	-0.0126	-0.0015
57	SLU 44	-0.03069	0.00063	-0.00749	-0.001	-0.0126	-0.0016
57	SLU 45	-0.03277	0.00064	-0.00711	-0.001	-0.0135	-0.0015
57	SLU 46	-0.03278	0.00064	-0.00711	-0.001	-0.0135	-0.0016
57	SLU 47	-0.02664	0.00062	-0.00808	-0.0011	-0.0108	-0.0017
57	SLU 48	-0.02873	0.00062	-0.0077	-0.0011	-0.0118	-0.0017
57	SLU 49	-0.03186	0.00064	-0.00713	-0.001	-0.0132	-0.0016
57	SLU 50	-0.03186	0.00064	-0.00713	-0.0011	-0.0132	-0.0017
57	SLU 51	-0.02993	0.00064	-0.00794	-0.0011	-0.0121	-0.0018
57	SLU 52	-0.03202	0.00064	-0.00755	-0.0011	-0.0131	-0.0018
57	SLU 53	-0.03515	0.00066	-0.00698	-0.0011	-0.0145	-0.0017
57	SLU 54	-0.03516	0.00066	-0.00698	-0.0011	-0.0145	-0.0017
57	SLU 55	-0.03322	0.00066	-0.00779	-0.0011	-0.0134	-0.0017
57	SLU 56	-0.03323	0.00066	-0.00779	-0.0011	-0.0134	-0.0018
57	SLU 57	-0.03531	0.00066	-0.00741	-0.0011	-0.0144	-0.0017
57	SLU 58	-0.03532	0.00067	-0.00741	-0.0012	-0.0144	-0.0018
57	SLU 59	-0.03045	0.00065	-0.00853	-0.0012	-0.012	-0.0019
57	SLU 60	-0.03045	0.00065	-0.00853	-0.0012	-0.012	-0.002
57	SLU 61	-0.03253	0.00066	-0.00815	-0.0012	-0.013	-0.0019
57	SLU 62	-0.03254	0.00066	-0.00815	-0.0012	-0.013	-0.002
57	SLU 63	-0.03374	0.00067	-0.00839	-0.0012	-0.0133	-0.002
57	SLU 64	-0.03374	0.00067	-0.00839	-0.0013	-0.0133	-0.0021
57	SLU 65	-0.03583	0.00068	-0.008	-0.0012	-0.0143	-0.002
57	SLU 66	-0.03583	0.00068	-0.008	-0.0013	-0.0143	-0.0021
57	SLU 67	-0.03133	0.00077	-0.01012	-0.0012	-0.013	-0.0018

Nodo	Cont.	Spostamento			Rotazione		
Ind.	N.br.	ux	uy	uz	rx	ry	rz
57	SLU 68	-0.03133	0.00077	-0.01012	-0.0013	-0.013	-0.0019
57	SLU 69	-0.03342	0.00078	-0.00974	-0.0013	-0.014	-0.0019
57	SLU 70	-0.03655	0.00079	-0.00916	-0.0012	-0.0154	-0.0018
57	SLU 71	-0.03655	0.00079	-0.00916	-0.0013	-0.0154	-0.0019
57	SLU 72	-0.03463	0.00079	-0.00997	-0.0013	-0.0143	-0.0019
57	SLU 73	-0.03671	0.0008	-0.00959	-0.0013	-0.0153	-0.002
57	SLU 74	-0.03984	0.00081	-0.00902	-0.0012	-0.0167	-0.0019
57	SLU 75	-0.03985	0.00081	-0.00902	-0.0013	-0.0167	-0.0019
57	SLU 76	-0.03791	0.00081	-0.00983	-0.0013	-0.0156	-0.0019
57	SLU 77	-0.03792	0.00081	-0.00983	-0.0013	-0.0156	-0.002
57	SLU 78	-0.04	0.00082	-0.00945	-0.0013	-0.0165	-0.0019
57	SLU 79	-0.04001	0.00082	-0.00945	-0.0013	-0.0166	-0.002
57	SLU 80	-0.03387	0.00079	-0.01042	-0.0014	-0.0138	-0.0021
57	SLU 81	-0.03596	0.0008	-0.01003	-0.0014	-0.0148	-0.0021
57	SLU 82	-0.03909	0.00081	-0.00946	-0.0013	-0.0162	-0.002
57	SLU 83	-0.03909	0.00081	-0.00946	-0.0014	-0.0162	-0.0021
57	SLU 84	-0.03716	0.00081	-0.01027	-0.0014	-0.0151	-0.0022
57	SLU 85	-0.03925	0.00082	-0.00989	-0.0014	-0.0161	-0.0022
57	SLU 86	-0.04238	0.00083	-0.00932	-0.0013	-0.0175	-0.0021
57	SLU 87	-0.04239	0.00083	-0.00932	-0.0014	-0.0175	-0.0022
57	SLU 88	-0.04045	0.00083	-0.01013	-0.0014	-0.0164	-0.0021
57	SLU 89	-0.04046	0.00083	-0.01013	-0.0014	-0.0164	-0.0022
57	SLU 90	-0.04254	0.00084	-0.00975	-0.0014	-0.0174	-0.0021
57	SLU 91	-0.04255	0.00084	-0.00975	-0.0014	-0.0174	-0.0022
57	SLU 92	-0.03768	0.00083	-0.01087	-0.0015	-0.015	-0.0023
57	SLU 93	-0.03768	0.00083	-0.01086	-0.0015	-0.015	-0.0024
57	SLU 94	-0.03976	0.00083	-0.01048	-0.0015	-0.016	-0.0024
57	SLU 95	-0.03977	0.00083	-0.01048	-0.0015	-0.016	-0.0024
57	SLU 96	-0.04097	0.00085	-0.01072	-0.0015	-0.0163	-0.0024
57	SLU 97	-0.04097	0.00085	-0.01072	-0.0015	-0.0163	-0.0025
57	SLU 98	-0.04306	0.00085	-0.01034	-0.0015	-0.0173	-0.0024
57	SLU 99	-0.04306	0.00086	-0.01034	-0.0015	-0.0173	-0.0025
57	SLU 100	-0.03133	0.00077	-0.01012	-0.0012	-0.013	-0.0018
57	SLU 101	-0.03133	0.00077	-0.01012	-0.0013	-0.013	-0.0019
57	SLU 102	-0.03342	0.00078	-0.00974	-0.0013	-0.014	-0.0019
57	SLU 103	-0.03655	0.00079	-0.00916	-0.0012	-0.0154	-0.0018
57	SLU 104	-0.03655	0.00079	-0.00916	-0.0013	-0.0154	-0.0019
57	SLU 105	-0.03463	0.00079	-0.00997	-0.0013	-0.0143	-0.0019
57	SLU 106	-0.03671	0.0008	-0.00959	-0.0013	-0.0153	-0.002
57	SLU 107	-0.03984	0.00081	-0.00902	-0.0012	-0.0167	-0.0019
57	SLU 108	-0.03985	0.00081	-0.00902	-0.0013	-0.0167	-0.0019
57	SLU 109	-0.03791	0.00081	-0.00983	-0.0013	-0.0156	-0.0019
57	SLU 110	-0.03792	0.00081	-0.00983	-0.0013	-0.0156	-0.002
57	SLU 111	-0.04	0.00082	-0.00945	-0.0013	-0.0165	-0.0019
57	SLU 112	-0.04001	0.00082	-0.00945	-0.0013	-0.0166	-0.002
57	SLU 113	-0.03387	0.00079	-0.01042	-0.0014	-0.0138	-0.0021
57	SLU 114	-0.03596	0.0008	-0.01003	-0.0014	-0.0148	-0.0021
57	SLU 115	-0.03909	0.00081	-0.00946	-0.0013	-0.0162	-0.002
57	SLU 116	-0.03909	0.00081	-0.00946	-0.0014	-0.0162	-0.0021
57	SLU 117	-0.03716	0.00081	-0.01027	-0.0014	-0.0151	-0.0022
57	SLU 118	-0.03925	0.00082	-0.00989	-0.0014	-0.0161	-0.0022
57	SLU 119	-0.04238	0.00083	-0.00932	-0.0013	-0.0175	-0.0021
57	SLU 120	-0.04239	0.00083	-0.00932	-0.0014	-0.0175	-0.0022
57	SLU 121	-0.04045	0.00083	-0.01013	-0.0014	-0.0164	-0.0021
57	SLU 122	-0.04046	0.00083	-0.01013	-0.0014	-0.0164	-0.0022
57	SLU 123	-0.04254	0.00084	-0.00975	-0.0014	-0.0174	-0.0021
57	SLU 124	-0.04255	0.00084	-0.00975	-0.0014	-0.0174	-0.0022
57	SLU 125	-0.03768	0.00083	-0.01087	-0.0015	-0.015	-0.0023
57	SLU 126	-0.03768	0.00083	-0.01086	-0.0015	-0.015	-0.0024
57	SLU 127	-0.03976	0.00083	-0.01048	-0.0015	-0.016	-0.0024
57	SLU 128	-0.03977	0.00083	-0.01048	-0.0015	-0.016	-0.0024
57	SLU 129	-0.04097	0.00085	-0.01072	-0.0015	-0.0163	-0.0024
57	SLU 130	-0.04097	0.00085	-0.01072	-0.0015	-0.0163	-0.0025
57	SLU 131	-0.04306	0.00085	-0.01034	-0.0015	-0.0173	-0.0024
57	SLU 132	-0.04306	0.00086	-0.01034	-0.0015	-0.0173	-0.0025
57	SLE RA 1	-0.0241	0.00059	-0.00778	-0.0009	-0.01	-0.0014
57	SLE RA 2	-0.0241	0.00059	-0.00778	-0.001	-0.01	-0.0015
57	SLE RA 3	-0.02549	0.0006	-0.00753	-0.001	-0.0106	-0.0015
57	SLE RA 4	-0.02758	0.00061	-0.00715	-0.0009	-0.0116	-0.0014
57	SLE RA 5	-0.02758	0.00061	-0.00715	-0.001	-0.0116	-0.0014
57	SLE RA 6	-0.0263	0.00061	-0.00769	-0.001	-0.0109	-0.0015
57	SLE RA 7	-0.02769	0.00061	-0.00743	-0.001	-0.0115	-0.0015
57	SLE RA 8	-0.02978	0.00062	-0.00705	-0.0009	-0.0125	-0.0014
57	SLE RA 9	-0.02978	0.00062	-0.00705	-0.001	-0.0125	-0.0015
57	SLE RA 10	-0.02849	0.00062	-0.00759	-0.001	-0.0117	-0.0014
57	SLE RA 11	-0.02849	0.00062	-0.00759	-0.001	-0.0117	-0.0015
57	SLE RA 12	-0.02988	0.00063	-0.00734	-0.001	-0.0124	-0.0014
57	SLE RA 13	-0.02988	0.00063	-0.00734	-0.001	-0.0124	-0.0015
57	SLE RA 14	-0.02579	0.00061	-0.00798	-0.001	-0.0106	-0.0016
57	SLE RA 15	-0.02719	0.00061	-0.00773	-0.001	-0.0112	-0.0016
57	SLE RA 16	-0.02927	0.00062	-0.00735	-0.001	-0.0121	-0.0015
57	SLE RA 17	-0.02927	0.00062	-0.00735	-0.001	-0.0121	-0.0016
57	SLE RA 18	-0.02799	0.00062	-0.00789	-0.0011	-0.0114	-0.0016
57	SLE RA 19	-0.02938	0.00063	-0.00763	-0.0011	-0.012	-0.0016
57	SLE RA 20	-0.03147	0.00064	-0.00725	-0.001	-0.013	-0.0016
57	SLE RA 21	-0.03147	0.00064	-0.00725	-0.0011	-0.013	-0.0016
57	SLE RA 22	-0.03018	0.00063	-0.00779	-0.001	-0.0123	-0.0016
57	SLE RA 23	-0.03018	0.00064	-0.00779	-0.0011	-0.0123	-0.0016
57	SLE RA 24	-0.03157	0.00064	-0.00754	-0.001	-0.0129	-0.0016
57	SLE RA 25	-0.03158	0.00064	-0.00754	-0.0011	-0.0129	-0.0016
57	SLE RA 26	-0.02833	0.00063	-0.00828	-0.0011	-0.0114	-0.0017
57	SLE RA 27	-0.02833	0.00063	-0.00828	-0.0011	-0.0114	-0.0018
57	SLE RA 28	-0.02972	0.00063	-0.00803	-0.0011	-0.012	-0.0018
57	SLE RA 29	-0.02972	0.00064	-0.00803	-0.0011	-0.012	-0.0018
57	SLE RA 30	-0.03053	0.00064	-0.00819	-0.0011	-0.0122	-0.0018

Nodo	Cont.	Spostamento			Rotazione		
Ind.	N.br.	ux	uy	uz	rx	ry	rz
57	SLE RA 31	-0.03053	0.00064	-0.00818	-0.0012	-0.0122	-0.0018
57	SLE RA 32	-0.03192	0.00065	-0.00793	-0.0011	-0.0129	-0.0018
57	SLE RA 33	-0.03192	0.00065	-0.00793	-0.0012	-0.0129	-0.0018
57	SLE FR 1	-0.0241	0.00059	-0.00778	-0.0009	-0.01	-0.0014
57	SLE FR 2	-0.0241	0.00059	-0.00778	-0.001	-0.01	-0.0014
57	SLE FR 3	-0.02549	0.0006	-0.00753	-0.0009	-0.0106	-0.0014
57	SLE FR 4	-0.02498	0.0006	-0.00775	-0.0009	-0.0104	-0.0014
57	SLE FR 5	-0.02579	0.00061	-0.00798	-0.001	-0.0106	-0.0015
57	SLE QP 1	-0.0241	0.00059	-0.00778	-0.0009	-0.01	-0.0014
57	SLO 1	-0.11746	0.00042	0.03198	-0.1105	-0.06	-0.2638
57	SLO 2	-0.11746	0.00042	0.03198	-0.1105	-0.06	-0.2638
57	SLO 3	-0.11746	0.00076	0.03198	0.1088	-0.06	0.2611
57	SLO 4	-0.11746	0.00076	0.03198	0.1088	-0.06	0.2611
57	SLO 5	-0.05211	0.00002	0.00414	-0.3664	-0.025	-0.8762
57	SLO 6	-0.05211	0.00002	0.00414	-0.3664	-0.025	-0.8762
57	SLO 7	-0.05211	0.00117	0.00414	0.3646	-0.025	0.8735
57	SLO 8	-0.05211	0.00117	0.00414	0.3646	-0.025	0.8735
57	SLO 9	0.00391	0.00002	-0.01971	-0.3664	0.005	-0.8762
57	SLO 10	0.00391	0.00002	-0.01971	-0.3664	0.005	-0.8762
57	SLO 11	0.00391	0.00117	-0.01971	0.3646	0.005	0.8734
57	SLO 12	0.00391	0.00117	-0.01971	0.3646	0.005	0.8734
57	SLO 13	0.06926	0.00042	-0.04754	-0.1106	0.04	-0.2639
57	SLO 14	0.06926	0.00042	-0.04754	-0.1106	0.04	-0.2639
57	SLO 15	0.06926	0.00077	-0.04754	0.1087	0.04	0.261
57	SLO 16	0.06926	0.00077	-0.04754	0.1087	0.04	0.261
57	SLD 1	-0.1007	0.00043	0.02484	-0.1022	-0.0511	-0.2439
57	SLD 2	-0.1007	0.00043	0.02484	-0.1022	-0.0511	-0.2439
57	SLD 3	-0.1007	0.00075	0.02484	0.1004	-0.0511	0.2412
57	SLD 4	-0.1007	0.00075	0.02484	0.1004	-0.0511	0.2412
57	SLD 5	-0.04708	0.00006	0.002	-0.3386	-0.0223	-0.8097
57	SLD 6	-0.04708	0.00006	0.002	-0.3386	-0.0223	-0.8097
57	SLD 7	-0.04708	0.00112	0.002	0.3368	-0.0223	0.807
57	SLD 8	-0.04708	0.00112	0.002	0.3368	-0.0223	0.807
57	SLD 9	-0.00112	0.00006	-0.01757	-0.3386	0.0023	-0.8097
57	SLD 10	-0.00112	0.00006	-0.01757	-0.3386	0.0023	-0.8097
57	SLD 11	-0.00112	0.00112	-0.01757	0.3368	0.0023	0.8069
57	SLD 12	-0.00112	0.00112	-0.01757	0.3368	0.0023	0.8069
57	SLD 13	0.05251	0.00044	-0.04041	-0.1023	0.031	-0.2439
57	SLD 14	0.05251	0.00044	-0.04041	-0.1023	0.031	-0.2439
57	SLD 15	0.05251	0.00075	-0.04041	0.1004	0.031	0.2411
57	SLD 16	0.05251	0.00075	-0.04041	0.1004	0.031	0.2411
57	SLV 1	-0.19523	0.00017	0.0651	-0.2681	-0.1017	-0.6409
57	SLV 2	-0.19523	0.00017	0.0651	-0.2681	-0.1017	-0.6409
57	SLV 3	-0.19523	0.00101	0.0651	0.2664	-0.1017	0.6383
57	SLV 4	-0.19523	0.00101	0.0651	0.2664	-0.1017	0.6383
57	SLV 5	-0.07544	-0.00081	0.01408	-0.8916	-0.0375	-2.1334
57	SLV 6	-0.07544	-0.00081	0.01408	-0.8916	-0.0375	-2.1334
57	SLV 7	-0.07544	0.00199	0.01408	0.8898	-0.0375	2.1306
57	SLV 8	-0.07544	0.00199	0.01408	0.8898	-0.0375	2.1306
57	SLV 9	0.02724	-0.00081	-0.02965	-0.8917	0.0175	-2.1334
57	SLV 10	0.02724	-0.00081	-0.02965	-0.8917	0.0175	-2.1334
57	SLV 11	0.02724	0.002	-0.02965	0.8898	0.0175	2.1306
57	SLV 12	0.02724	0.002	-0.02965	0.8898	0.0175	2.1306
57	SLV 13	0.14704	0.00018	-0.08067	-0.2682	0.0817	-0.6411
57	SLV 14	0.14704	0.00018	-0.08067	-0.2682	0.0817	-0.6411
57	SLV 15	0.14704	0.00102	-0.08067	0.2662	0.0817	0.6382
57	SLV 16	0.14704	0.00102	-0.08067	0.2662	0.0817	0.6382
58	SLU 1	-0.01305	0.00057	0.02725	-0.0007	-0.0091	0
58	SLU 2	-0.01305	0.00056	0.02726	-0.0011	-0.0091	0
58	SLU 3	-0.01434	0.00057	0.03057	-0.0011	-0.0099	0
58	SLU 4	-0.01628	0.00059	0.03553	-0.0008	-0.0112	0
58	SLU 5	-0.01628	0.00058	0.03554	-0.0011	-0.0112	0
58	SLU 6	-0.01491	0.00058	0.03182	-0.0012	-0.0104	0
58	SLU 7	-0.0162	0.00059	0.03513	-0.0012	-0.0113	0
58	SLU 8	-0.01814	0.00061	0.04009	-0.0009	-0.0125	0
58	SLU 9	-0.01814	0.0006	0.04009	-0.0011	-0.0125	0
58	SLU 10	-0.01677	0.00061	0.03637	-0.0008	-0.0118	0
58	SLU 11	-0.01677	0.0006	0.03637	-0.0011	-0.0118	0
58	SLU 12	-0.01806	0.00062	0.03968	-0.0009	-0.0126	0
58	SLU 13	-0.01807	0.00061	0.03968	-0.0012	-0.0126	0
58	SLU 14	-0.01433	0.00058	0.03018	-0.0011	-0.0101	0
58	SLU 15	-0.01562	0.00059	0.03349	-0.0012	-0.011	0
58	SLU 16	-0.01756	0.00061	0.03845	-0.0008	-0.0122	0
58	SLU 17	-0.01756	0.0006	0.03845	-0.0011	-0.0122	0
58	SLU 18	-0.01619	0.0006	0.03473	-0.0012	-0.0115	0
58	SLU 19	-0.01748	0.00061	0.03804	-0.0012	-0.0123	0
58	SLU 20	-0.01942	0.00063	0.043	-0.0009	-0.0136	0
58	SLU 21	-0.01942	0.00062	0.04301	-0.0012	-0.0136	0
58	SLU 22	-0.01805	0.00063	0.03928	-0.0009	-0.0128	0
58	SLU 23	-0.01805	0.00062	0.03929	-0.0012	-0.0128	0
58	SLU 24	-0.01934	0.00063	0.04259	-0.0009	-0.0136	0
58	SLU 25	-0.01935	0.00063	0.0426	-0.0012	-0.0136	0
58	SLU 26	-0.01625	0.00062	0.03455	-0.0008	-0.0117	0
58	SLU 27	-0.01625	0.00061	0.03455	-0.0011	-0.0117	0
58	SLU 28	-0.01754	0.00062	0.03786	-0.0008	-0.0125	0
58	SLU 29	-0.01754	0.00062	0.03786	-0.0011	-0.0125	0
58	SLU 30	-0.01811	0.00064	0.0391	-0.0009	-0.013	0
58	SLU 31	-0.01811	0.00063	0.03911	-0.0012	-0.013	0
58	SLU 32	-0.0194	0.00064	0.04241	-0.0009	-0.0139	0
58	SLU 33	-0.0194	0.00064	0.04242	-0.0012	-0.0139	0
58	SLU 34	-0.01305	0.00057	0.02725	-0.0007	-0.0091	0
58	SLU 35	-0.01305	0.00056	0.02726	-0.0011	-0.0091	0
58	SLU 36	-0.01434	0.00057	0.03057	-0.0011	-0.0099	0
58	SLU 37	-0.01628	0.00059	0.03553	-0.0008	-0.0112	0
58	SLU 38	-0.01628	0.00058	0.03554	-0.0011	-0.0112	0

Nodo	Cont.	Spostamento			Rotazione		
Ind.	N.br.	ux	uy	uz	rx	ry	rz
58	SLU 39	-0.01491	0.00058	0.03182	-0.0012	-0.0104	0
58	SLU 40	-0.0162	0.00059	0.03513	-0.0012	-0.0113	0
58	SLU 41	-0.01814	0.00061	0.04009	-0.0009	-0.0125	0
58	SLU 42	-0.01814	0.0006	0.04009	-0.0011	-0.0125	0
58	SLU 43	-0.01677	0.00061	0.03637	-0.0008	-0.0118	0
58	SLU 44	-0.01677	0.0006	0.03637	-0.0011	-0.0118	0
58	SLU 45	-0.01806	0.00062	0.03968	-0.0009	-0.0126	0
58	SLU 46	-0.01807	0.00061	0.03968	-0.0012	-0.0126	0
58	SLU 47	-0.01433	0.00058	0.03018	-0.0011	-0.0101	0
58	SLU 48	-0.01562	0.00059	0.03349	-0.0012	-0.011	0
58	SLU 49	-0.01756	0.00061	0.03845	-0.0008	-0.0122	0
58	SLU 50	-0.01756	0.0006	0.03845	-0.0011	-0.0122	0
58	SLU 51	-0.01619	0.0006	0.03473	-0.0012	-0.0115	0
58	SLU 52	-0.01748	0.00061	0.03804	-0.0012	-0.0123	0
58	SLU 53	-0.01942	0.00063	0.043	-0.0009	-0.0136	0
58	SLU 54	-0.01942	0.00062	0.04301	-0.0012	-0.0136	0
58	SLU 55	-0.01805	0.00063	0.03928	-0.0009	-0.0128	0
58	SLU 56	-0.01805	0.00062	0.03929	-0.0012	-0.0128	0
58	SLU 57	-0.01934	0.00063	0.04259	-0.0009	-0.0136	0
58	SLU 58	-0.01935	0.00063	0.0426	-0.0012	-0.0136	0
58	SLU 59	-0.01625	0.00062	0.03455	-0.0008	-0.0117	0
58	SLU 60	-0.01625	0.00061	0.03455	-0.0011	-0.0117	0
58	SLU 61	-0.01754	0.00062	0.03786	-0.0008	-0.0125	0
58	SLU 62	-0.01754	0.00062	0.03786	-0.0011	-0.0125	0
58	SLU 63	-0.01811	0.00064	0.0391	-0.0009	-0.013	0
58	SLU 64	-0.01811	0.00063	0.03911	-0.0012	-0.013	0
58	SLU 65	-0.0194	0.00064	0.04241	-0.0009	-0.0139	0
58	SLU 66	-0.0194	0.00064	0.04242	-0.0012	-0.0139	0
58	SLU 67	-0.01696	0.00074	0.03543	-0.0009	-0.0118	0
58	SLU 68	-0.01696	0.00073	0.03543	-0.0013	-0.0118	0
58	SLU 69	-0.01826	0.00074	0.03875	-0.0014	-0.0126	0
58	SLU 70	-0.02019	0.00076	0.04371	-0.001	-0.0139	0
58	SLU 71	-0.02019	0.00075	0.04371	-0.0013	-0.0139	0
58	SLU 72	-0.01883	0.00075	0.03999	-0.0014	-0.0131	0
58	SLU 73	-0.02012	0.00076	0.0433	-0.0014	-0.014	0
58	SLU 74	-0.02205	0.00078	0.04826	-0.0011	-0.0152	0
58	SLU 75	-0.02206	0.00077	0.04827	-0.0014	-0.0152	0
58	SLU 76	-0.02069	0.00078	0.04454	-0.0011	-0.0145	0
58	SLU 77	-0.02069	0.00077	0.04455	-0.0013	-0.0145	0
58	SLU 78	-0.02198	0.00079	0.04785	-0.0011	-0.0153	0
58	SLU 79	-0.02198	0.00078	0.04786	-0.0014	-0.0153	0
58	SLU 80	-0.01824	0.00075	0.03835	-0.0014	-0.0128	0
58	SLU 81	-0.01954	0.00076	0.04166	-0.0014	-0.0137	0
58	SLU 82	-0.02147	0.00078	0.04662	-0.0011	-0.0149	0
58	SLU 83	-0.02147	0.00077	0.04663	-0.0013	-0.0149	0
58	SLU 84	-0.02011	0.00077	0.04291	-0.0014	-0.0142	0
58	SLU 85	-0.0214	0.00078	0.04622	-0.0014	-0.015	0
58	SLU 86	-0.02333	0.0008	0.05118	-0.0011	-0.0163	0
58	SLU 87	-0.02334	0.00079	0.05119	-0.0014	-0.0163	0
58	SLU 88	-0.02197	0.0008	0.04746	-0.0011	-0.0155	0
58	SLU 89	-0.02197	0.00079	0.04746	-0.0014	-0.0155	0
58	SLU 90	-0.02326	0.00081	0.05077	-0.0011	-0.0164	0
58	SLU 91	-0.02326	0.0008	0.05078	-0.0014	-0.0164	0
58	SLU 92	-0.02016	0.00079	0.04272	-0.001	-0.0144	0
58	SLU 93	-0.02016	0.00078	0.04273	-0.0013	-0.0144	0
58	SLU 94	-0.02145	0.0008	0.04603	-0.0011	-0.0153	0
58	SLU 95	-0.02145	0.00079	0.04604	-0.0014	-0.0153	0
58	SLU 96	-0.02202	0.00081	0.04728	-0.0011	-0.0158	0
58	SLU 97	-0.02202	0.0008	0.04728	-0.0014	-0.0158	0
58	SLU 98	-0.02331	0.00082	0.05059	-0.0011	-0.0166	0
58	SLU 99	-0.02332	0.00081	0.05059	-0.0014	-0.0166	0
58	SLU 100	-0.01696	0.00074	0.03543	-0.0009	-0.0118	0
58	SLU 101	-0.01696	0.00073	0.03543	-0.0013	-0.0118	0
58	SLU 102	-0.01826	0.00074	0.03875	-0.0014	-0.0126	0
58	SLU 103	-0.02019	0.00076	0.04371	-0.001	-0.0139	0
58	SLU 104	-0.02019	0.00075	0.04371	-0.0013	-0.0139	0
58	SLU 105	-0.01883	0.00075	0.03999	-0.0014	-0.0131	0
58	SLU 106	-0.02012	0.00076	0.0433	-0.0014	-0.014	0
58	SLU 107	-0.02205	0.00078	0.04826	-0.0011	-0.0152	0
58	SLU 108	-0.02206	0.00077	0.04827	-0.0014	-0.0152	0
58	SLU 109	-0.02069	0.00078	0.04454	-0.0011	-0.0145	0
58	SLU 110	-0.02069	0.00077	0.04455	-0.0013	-0.0145	0
58	SLU 111	-0.02198	0.00079	0.04785	-0.0011	-0.0153	0
58	SLU 112	-0.02198	0.00078	0.04786	-0.0014	-0.0153	0
58	SLU 113	-0.01824	0.00075	0.03835	-0.0014	-0.0128	0
58	SLU 114	-0.01954	0.00076	0.04166	-0.0014	-0.0137	0
58	SLU 115	-0.02147	0.00078	0.04662	-0.0011	-0.0149	0
58	SLU 116	-0.02147	0.00077	0.04663	-0.0013	-0.0149	0
58	SLU 117	-0.02011	0.00077	0.04291	-0.0014	-0.0142	0
58	SLU 118	-0.0214	0.00078	0.04622	-0.0014	-0.015	0
58	SLU 119	-0.02333	0.0008	0.05118	-0.0011	-0.0163	0
58	SLU 120	-0.02334	0.00079	0.05119	-0.0014	-0.0163	0
58	SLU 121	-0.02197	0.0008	0.04746	-0.0011	-0.0155	0
58	SLU 122	-0.02197	0.00079	0.04746	-0.0014	-0.0155	0
58	SLU 123	-0.02326	0.00081	0.05077	-0.0011	-0.0164	0
58	SLU 124	-0.02326	0.0008	0.05078	-0.0014	-0.0164	0
58	SLU 125	-0.02016	0.00079	0.04272	-0.001	-0.0144	0
58	SLU 126	-0.02016	0.00078	0.04273	-0.0013	-0.0144	0
58	SLU 127	-0.02145	0.0008	0.04603	-0.0011	-0.0153	0
58	SLU 128	-0.02145	0.00079	0.04604	-0.0014	-0.0153	0
58	SLU 129	-0.02202	0.00081	0.04728	-0.0011	-0.0158	0
58	SLU 130	-0.02202	0.0008	0.04728	-0.0014	-0.0158	0
58	SLU 131	-0.02331	0.00082	0.05059	-0.0011	-0.0166	0
58	SLU 132	-0.02332	0.00081	0.05059	-0.0014	-0.0166	0
58	SLE RA 1	-0.01305	0.00057	0.02725	-0.0007	-0.0091	0

Nodo	Cont.	Spostamento			Rotazione		
Ind.	N.br.	ux	uy	uz	rx	ry	rz
58	SLE RA 2	-0.01305	0.00056	0.02726	-0.001	-0.0091	0
58	SLE RA 3	-0.01391	0.00057	0.02946	-0.001	-0.0096	0
58	SLE RA 4	-0.0152	0.00058	0.03277	-0.0008	-0.0105	0
58	SLE RA 5	-0.0152	0.00058	0.03277	-0.001	-0.0105	0
58	SLE RA 6	-0.01429	0.00058	0.03029	-0.001	-0.01	0
58	SLE RA 7	-0.01515	0.00058	0.0325	-0.001	-0.0105	0
58	SLE RA 8	-0.01644	0.0006	0.03581	-0.0008	-0.0114	0
58	SLE RA 9	-0.01644	0.00059	0.03581	-0.001	-0.0114	0
58	SLE RA 10	-0.01553	0.0006	0.03333	-0.0008	-0.0109	0
58	SLE RA 11	-0.01553	0.00059	0.03333	-0.001	-0.0109	0
58	SLE RA 12	-0.01639	0.0006	0.03554	-0.0008	-0.0114	0
58	SLE RA 13	-0.01639	0.0006	0.03554	-0.001	-0.0114	0
58	SLE RA 14	-0.0139	0.00058	0.0292	-0.001	-0.0098	0
58	SLE RA 15	-0.01476	0.00058	0.03141	-0.001	-0.0103	0
58	SLE RA 16	-0.01605	0.0006	0.03472	-0.0008	-0.0112	0
58	SLE RA 17	-0.01605	0.00059	0.03472	-0.001	-0.0112	0
58	SLE RA 18	-0.01514	0.00059	0.03224	-0.001	-0.0107	0
58	SLE RA 19	-0.01601	0.0006	0.03445	-0.0011	-0.0112	0
58	SLE RA 20	-0.0173	0.00061	0.03775	-0.0008	-0.0121	0
58	SLE RA 21	-0.0173	0.0006	0.03776	-0.001	-0.0121	0
58	SLE RA 22	-0.01638	0.00061	0.03527	-0.0008	-0.0116	0
58	SLE RA 23	-0.01638	0.0006	0.03528	-0.001	-0.0116	0
58	SLE RA 24	-0.01724	0.00061	0.03748	-0.0008	-0.0121	0
58	SLE RA 25	-0.01725	0.00061	0.03748	-0.001	-0.0121	0
58	SLE RA 26	-0.01518	0.0006	0.03211	-0.0008	-0.0108	0
58	SLE RA 27	-0.01518	0.0006	0.03212	-0.001	-0.0108	0
58	SLE RA 28	-0.01604	0.00061	0.03432	-0.0008	-0.0114	0
58	SLE RA 29	-0.01604	0.0006	0.03433	-0.001	-0.0114	0
58	SLE RA 30	-0.01642	0.00061	0.03515	-0.0008	-0.0117	0
58	SLE RA 31	-0.01642	0.00061	0.03516	-0.001	-0.0117	0
58	SLE RA 32	-0.01728	0.00062	0.03736	-0.0008	-0.0123	0
58	SLE RA 33	-0.01728	0.00062	0.03736	-0.001	-0.0123	0
58	SLE FR 1	-0.01305	0.00057	0.02725	-0.0007	-0.0091	0
58	SLE FR 2	-0.01305	0.00057	0.02726	-0.0009	-0.0091	0
58	SLE FR 3	-0.01391	0.00057	0.02946	-0.0007	-0.0096	0
58	SLE FR 4	-0.01354	0.00057	0.02847	-0.0007	-0.0094	0
58	SLE FR 5	-0.0139	0.00058	0.0292	-0.0008	-0.0098	0
58	SLE QP 1	-0.01305	0.00057	0.02725	-0.0007	-0.0091	0
58	SLO 1	-0.10379	-0.00317	0.19024	-0.0341	-0.0019	-0.0012
58	SLO 2	-0.10379	-0.00317	0.19024	-0.0341	-0.0019	-0.0012
58	SLO 3	-0.10379	0.00431	0.19024	0.0309	-0.0019	0.0012
58	SLO 4	-0.10379	0.00431	0.19024	0.0309	-0.0019	0.0012
58	SLO 5	-0.04027	-0.01189	0.07615	-0.1094	-0.0069	-0.0041
58	SLO 6	-0.04027	-0.01189	0.07615	-0.1094	-0.0069	-0.0041
58	SLO 7	-0.04027	0.01303	0.07615	0.1075	-0.0069	0.0041
58	SLO 8	-0.04027	0.01303	0.07615	0.1075	-0.0069	0.0041
58	SLO 9	0.01418	-0.01189	-0.02164	-0.1089	-0.0112	-0.0041
58	SLO 10	0.01418	-0.01189	-0.02164	-0.1089	-0.0112	-0.0041
58	SLO 11	0.01418	0.01303	-0.02164	0.108	-0.0112	0.0041
58	SLO 12	0.01418	0.01303	-0.02164	0.108	-0.0112	0.0041
58	SLO 13	0.0777	-0.00317	-0.13573	-0.0324	-0.0162	-0.0012
58	SLO 14	0.0777	-0.00317	-0.13573	-0.0324	-0.0162	-0.0012
58	SLO 15	0.0777	0.00431	-0.13573	0.0327	-0.0162	0.0012
58	SLO 16	0.0777	0.00431	-0.13573	0.0327	-0.0162	0.0012
58	SLD 1	-0.08751	-0.00289	0.16099	-0.0315	-0.0032	-0.0012
58	SLD 2	-0.08751	-0.00289	0.16099	-0.0315	-0.0032	-0.0012
58	SLD 3	-0.08751	0.00402	0.16099	0.0286	-0.0032	0.0011
58	SLD 4	-0.08751	0.00402	0.16099	0.0286	-0.0032	0.0011
58	SLD 5	-0.03538	-0.01094	0.06737	-0.1011	-0.0073	-0.0038
58	SLD 6	-0.03538	-0.01094	0.06737	-0.1011	-0.0073	-0.0038
58	SLD 7	-0.03539	0.01208	0.06737	0.0993	-0.0073	0.0038
58	SLD 8	-0.03539	0.01208	0.06737	0.0993	-0.0073	0.0038
58	SLD 9	0.00929	-0.01094	-0.01287	-0.1007	-0.0108	-0.0038
58	SLD 10	0.00929	-0.01094	-0.01287	-0.1007	-0.0108	-0.0038
58	SLD 11	0.00929	0.01208	-0.01287	0.0997	-0.0108	0.0038
58	SLD 12	0.00929	0.01208	-0.01287	0.0997	-0.0108	0.0038
58	SLD 13	0.06141	-0.00288	-0.10648	-0.0301	-0.0149	-0.0012
58	SLD 14	0.06141	-0.00288	-0.10648	-0.0301	-0.0149	-0.0012
58	SLD 15	0.06141	0.00403	-0.10648	0.03	-0.0149	0.0011
58	SLD 16	0.06141	0.00403	-0.10648	0.03	-0.0149	0.0011
58	SLV 1	-0.17939	-0.00854	0.32602	-0.0816	0.004	-0.003
58	SLV 2	-0.17939	-0.00854	0.32602	-0.0816	0.004	-0.003
58	SLV 3	-0.17939	0.00968	0.32602	0.077	0.004	0.003
58	SLV 4	-0.17939	0.00968	0.32602	0.077	0.004	0.003
58	SLV 5	-0.06295	-0.0298	0.11688	-0.2655	-0.0052	-0.0101
58	SLV 6	-0.06295	-0.0298	0.11688	-0.2655	-0.0052	-0.0101
58	SLV 7	-0.06295	0.03094	0.11688	0.2631	-0.0052	0.01
58	SLV 8	-0.06295	0.03094	0.11688	0.2631	-0.0052	0.01
58	SLV 9	0.03685	-0.0298	-0.06238	-0.2646	-0.013	-0.0101
58	SLV 10	0.03685	-0.0298	-0.06238	-0.2646	-0.013	-0.0101
58	SLV 11	0.03685	0.03094	-0.06238	0.2641	-0.013	0.01
58	SLV 12	0.03685	0.03094	-0.06238	0.2641	-0.013	0.01
58	SLV 13	0.15329	-0.00854	-0.27151	-0.0784	-0.0222	-0.003
58	SLV 14	0.15329	-0.00854	-0.27151	-0.0784	-0.0222	-0.003
58	SLV 15	0.15329	0.00968	-0.27151	0.0802	-0.0222	0.003
58	SLV 16	0.15329	0.00968	-0.27151	0.0802	-0.0222	0.003
59	SLU 1	0.01305	0.00057	0.02725	-0.0007	0.0091	0
59	SLU 2	0.01305	0.00056	0.02726	-0.0011	0.0091	0
59	SLU 3	0.01434	0.00057	0.03057	-0.0011	0.0099	0
59	SLU 4	0.01628	0.00059	0.03553	-0.0008	0.0112	0
59	SLU 5	0.01628	0.00058	0.03554	-0.0011	0.0112	0
59	SLU 6	0.01523	0.00058	0.03239	-0.0012	0.0104	0
59	SLU 7	0.01652	0.00059	0.03571	-0.0012	0.0112	0
59	SLU 8	0.01846	0.00061	0.04067	-0.0009	0.0125	0
59	SLU 9	0.01846	0.0006	0.04067	-0.0011	0.0125	0

Nodo	Cont.	Spostamento			Rotazione		
Ind.	N.br.	ux	uy	uz	rx	ry	rz
59	SLU 10	0.01741	0.00061	0.03752	-0.0008	0.0117	0
59	SLU 11	0.01741	0.0006	0.03753	-0.0011	0.0117	0
59	SLU 12	0.0187	0.00062	0.04083	-0.0009	0.0125	0
59	SLU 13	0.0187	0.00061	0.04084	-0.0012	0.0125	0
59	SLU 14	0.01486	0.00058	0.03114	-0.0011	0.0101	0
59	SLU 15	0.01615	0.00059	0.03445	-0.0012	0.0109	0
59	SLU 16	0.01809	0.00061	0.03941	-0.0008	0.0122	0
59	SLU 17	0.01809	0.0006	0.03942	-0.0011	0.0122	0
59	SLU 18	0.01704	0.0006	0.03628	-0.0012	0.0114	0
59	SLU 19	0.01833	0.00061	0.03959	-0.0012	0.0122	0
59	SLU 20	0.02027	0.00063	0.04455	-0.0009	0.0135	0
59	SLU 21	0.02027	0.00062	0.04455	-0.0012	0.0135	0
59	SLU 22	0.01922	0.00063	0.0414	-0.0009	0.0127	0
59	SLU 23	0.01922	0.00062	0.04141	-0.0012	0.0127	0
59	SLU 24	0.02051	0.00063	0.04471	-0.0009	0.0135	0
59	SLU 25	0.02051	0.00063	0.04472	-0.0012	0.0135	0
59	SLU 26	0.01757	0.00062	0.03696	-0.0008	0.0116	0
59	SLU 27	0.01757	0.00061	0.03696	-0.0011	0.0116	0
59	SLU 28	0.01886	0.00062	0.04027	-0.0009	0.0124	0
59	SLU 29	0.01887	0.00062	0.04027	-0.0011	0.0124	0
59	SLU 30	0.01975	0.00064	0.04209	-0.0009	0.0129	0
59	SLU 31	0.01975	0.00063	0.0421	-0.0012	0.0129	0
59	SLU 32	0.02105	0.00064	0.0454	-0.0009	0.0137	0
59	SLU 33	0.02105	0.00064	0.04541	-0.0012	0.0137	0
59	SLU 34	0.01305	0.00057	0.02725	-0.0007	0.0091	0
59	SLU 35	0.01305	0.00056	0.02726	-0.0011	0.0091	0
59	SLU 36	0.01434	0.00057	0.03057	-0.0011	0.0099	0
59	SLU 37	0.01628	0.00059	0.03553	-0.0008	0.0112	0
59	SLU 38	0.01628	0.00058	0.03554	-0.0011	0.0112	0
59	SLU 39	0.01523	0.00058	0.03239	-0.0012	0.0104	0
59	SLU 40	0.01652	0.00059	0.03571	-0.0012	0.0112	0
59	SLU 41	0.01846	0.00061	0.04067	-0.0009	0.0125	0
59	SLU 42	0.01846	0.0006	0.04067	-0.0011	0.0125	0
59	SLU 43	0.01741	0.00061	0.03752	-0.0008	0.0117	0
59	SLU 44	0.01741	0.0006	0.03753	-0.0011	0.0117	0
59	SLU 45	0.0187	0.00062	0.04083	-0.0009	0.0125	0
59	SLU 46	0.0187	0.00061	0.04084	-0.0012	0.0125	0
59	SLU 47	0.01486	0.00058	0.03114	-0.0011	0.0101	0
59	SLU 48	0.01615	0.00059	0.03445	-0.0012	0.0109	0
59	SLU 49	0.01809	0.00061	0.03941	-0.0008	0.0122	0
59	SLU 50	0.01809	0.0006	0.03942	-0.0011	0.0122	0
59	SLU 51	0.01704	0.0006	0.03628	-0.0012	0.0114	0
59	SLU 52	0.01833	0.00061	0.03959	-0.0012	0.0122	0
59	SLU 53	0.02027	0.00063	0.04455	-0.0009	0.0135	0
59	SLU 54	0.02027	0.00062	0.04455	-0.0012	0.0135	0
59	SLU 55	0.01922	0.00063	0.0414	-0.0009	0.0127	0
59	SLU 56	0.01922	0.00062	0.04141	-0.0012	0.0127	0
59	SLU 57	0.02051	0.00063	0.04471	-0.0009	0.0135	0
59	SLU 58	0.02051	0.00063	0.04472	-0.0012	0.0135	0
59	SLU 59	0.01757	0.00062	0.03696	-0.0008	0.0116	0
59	SLU 60	0.01757	0.00061	0.03696	-0.0011	0.0116	0
59	SLU 61	0.01886	0.00062	0.04027	-0.0009	0.0124	0
59	SLU 62	0.01887	0.00062	0.04027	-0.0011	0.0124	0
59	SLU 63	0.01975	0.00064	0.04209	-0.0009	0.0129	0
59	SLU 64	0.01975	0.00063	0.0421	-0.0012	0.0129	0
59	SLU 65	0.02105	0.00064	0.0454	-0.0009	0.0137	0
59	SLU 66	0.02105	0.00064	0.04541	-0.0012	0.0137	0
59	SLU 67	0.01696	0.00074	0.03543	-0.0009	0.0118	0
59	SLU 68	0.01696	0.00073	0.03543	-0.0013	0.0118	0
59	SLU 69	0.01826	0.00074	0.03875	-0.0014	0.0126	0
59	SLU 70	0.02019	0.00076	0.04371	-0.001	0.0139	0
59	SLU 71	0.02019	0.00075	0.04371	-0.0013	0.0139	0
59	SLU 72	0.01915	0.00075	0.04057	-0.0014	0.0131	0
59	SLU 73	0.02044	0.00076	0.04388	-0.0014	0.014	0
59	SLU 74	0.02237	0.00078	0.04884	-0.0011	0.0152	0
59	SLU 75	0.02237	0.00077	0.04885	-0.0014	0.0152	0
59	SLU 76	0.02132	0.00078	0.0457	-0.0011	0.0144	0
59	SLU 77	0.02133	0.00077	0.0457	-0.0013	0.0144	0
59	SLU 78	0.02262	0.00079	0.04901	-0.0011	0.0153	0
59	SLU 79	0.02262	0.00078	0.04901	-0.0014	0.0153	0
59	SLU 80	0.01877	0.00075	0.03932	-0.0014	0.0128	0
59	SLU 81	0.02007	0.00076	0.04263	-0.0014	0.0136	0
59	SLU 82	0.022	0.00078	0.04759	-0.0011	0.0149	0
59	SLU 83	0.022	0.00077	0.04759	-0.0013	0.0149	0
59	SLU 84	0.02096	0.00077	0.04445	-0.0014	0.0141	0
59	SLU 85	0.02225	0.00078	0.04776	-0.0015	0.015	0
59	SLU 86	0.02418	0.0008	0.05272	-0.0011	0.0162	0
59	SLU 87	0.02418	0.00079	0.05273	-0.0014	0.0162	0
59	SLU 88	0.02313	0.0008	0.04958	-0.0011	0.0154	0
59	SLU 89	0.02314	0.00079	0.04958	-0.0014	0.0154	0
59	SLU 90	0.02443	0.00081	0.05289	-0.0011	0.0163	0
59	SLU 91	0.02443	0.0008	0.0529	-0.0014	0.0163	0
59	SLU 92	0.02149	0.00079	0.04513	-0.001	0.0143	0
59	SLU 93	0.02149	0.00078	0.04514	-0.0013	0.0143	0
59	SLU 94	0.02278	0.0008	0.04844	-0.0011	0.0151	0
59	SLU 95	0.02278	0.00079	0.04845	-0.0014	0.0151	0
59	SLU 96	0.02367	0.00081	0.05027	-0.0011	0.0156	0
59	SLU 97	0.02367	0.0008	0.05027	-0.0014	0.0156	0
59	SLU 98	0.02496	0.00081	0.05358	-0.0011	0.0164	0
59	SLU 99	0.02496	0.00081	0.05358	-0.0014	0.0165	0
59	SLU 100	0.01696	0.00074	0.03543	-0.0009	0.0118	0
59	SLU 101	0.01696	0.00073	0.03543	-0.0013	0.0118	0
59	SLU 102	0.01826	0.00074	0.03875	-0.0014	0.0126	0
59	SLU 103	0.02019	0.00076	0.04371	-0.001	0.0139	0
59	SLU 104	0.02019	0.00075	0.04371	-0.0013	0.0139	0

Nodo	Cont.	Spostamento			Rotazione		
Ind.	N.br.	ux	uy	uz	rx	ry	rz
59	SLU 105	0.01915	0.00075	0.04057	-0.0014	0.0131	0
59	SLU 106	0.02044	0.00076	0.04388	-0.0014	0.014	0
59	SLU 107	0.02237	0.00078	0.04884	-0.0011	0.0152	0
59	SLU 108	0.02237	0.00077	0.04885	-0.0014	0.0152	0
59	SLU 109	0.02132	0.00078	0.0457	-0.0011	0.0144	0
59	SLU 110	0.02133	0.00077	0.0457	-0.0013	0.0144	0
59	SLU 111	0.02262	0.00079	0.04901	-0.0011	0.0153	0
59	SLU 112	0.02262	0.00078	0.04901	-0.0014	0.0153	0
59	SLU 113	0.01877	0.00075	0.03932	-0.0014	0.0128	0
59	SLU 114	0.02007	0.00076	0.04263	-0.0014	0.0136	0
59	SLU 115	0.022	0.00078	0.04759	-0.0011	0.0149	0
59	SLU 116	0.022	0.00077	0.04759	-0.0013	0.0149	0
59	SLU 117	0.02096	0.00077	0.04445	-0.0014	0.0141	0
59	SLU 118	0.02225	0.00078	0.04776	-0.0015	0.015	0
59	SLU 119	0.02418	0.0008	0.05272	-0.0011	0.0162	0
59	SLU 120	0.02418	0.00079	0.05273	-0.0014	0.0162	0
59	SLU 121	0.02313	0.0008	0.04958	-0.0011	0.0154	0
59	SLU 122	0.02314	0.00079	0.04958	-0.0014	0.0154	0
59	SLU 123	0.02443	0.00081	0.05289	-0.0011	0.0163	0
59	SLU 124	0.02443	0.0008	0.0529	-0.0014	0.0163	0
59	SLU 125	0.02149	0.00079	0.04513	-0.001	0.0143	0
59	SLU 126	0.02149	0.00078	0.04514	-0.0013	0.0143	0
59	SLU 127	0.02278	0.0008	0.04844	-0.0011	0.0151	0
59	SLU 128	0.02278	0.00079	0.04845	-0.0014	0.0151	0
59	SLU 129	0.02367	0.00081	0.05027	-0.0011	0.0156	0
59	SLU 130	0.02367	0.0008	0.05027	-0.0014	0.0156	0
59	SLU 131	0.02496	0.00081	0.05358	-0.0011	0.0164	0
59	SLU 132	0.02496	0.00081	0.05358	-0.0014	0.0165	0
59	SLE RA 1	0.01305	0.00057	0.02725	-0.0007	0.0091	0
59	SLE RA 2	0.01305	0.00056	0.02726	-0.001	0.0091	0
59	SLE RA 3	0.01391	0.00057	0.02946	-0.001	0.0096	0
59	SLE RA 4	0.0152	0.00058	0.03277	-0.0008	0.0105	0
59	SLE RA 5	0.0152	0.00058	0.03277	-0.001	0.0105	0
59	SLE RA 6	0.0145	0.00058	0.03068	-0.001	0.01	0
59	SLE RA 7	0.01536	0.00058	0.03289	-0.001	0.0105	0
59	SLE RA 8	0.01665	0.0006	0.03619	-0.0008	0.0113	0
59	SLE RA 9	0.01666	0.00059	0.0362	-0.001	0.0113	0
59	SLE RA 10	0.01596	0.00059	0.0341	-0.0008	0.0108	0
59	SLE RA 11	0.01596	0.00059	0.0341	-0.001	0.0108	0
59	SLE RA 12	0.01682	0.0006	0.03631	-0.0008	0.0114	0
59	SLE RA 13	0.01682	0.0006	0.03631	-0.001	0.0114	0
59	SLE RA 14	0.01426	0.00058	0.02984	-0.001	0.0097	0
59	SLE RA 15	0.01512	0.00058	0.03205	-0.001	0.0103	0
59	SLE RA 16	0.01641	0.0006	0.03536	-0.0008	0.0111	0
59	SLE RA 17	0.01641	0.00059	0.03536	-0.001	0.0111	0
59	SLE RA 18	0.01571	0.00059	0.03327	-0.001	0.0106	0
59	SLE RA 19	0.01657	0.0006	0.03548	-0.0011	0.0112	0
59	SLE RA 20	0.01786	0.00061	0.03878	-0.0008	0.012	0
59	SLE RA 21	0.01786	0.0006	0.03879	-0.001	0.012	0
59	SLE RA 22	0.01716	0.00061	0.03669	-0.0008	0.0115	0
59	SLE RA 23	0.01716	0.0006	0.03669	-0.001	0.0115	0
59	SLE RA 24	0.01802	0.00061	0.03889	-0.0008	0.0121	0
59	SLE RA 25	0.01802	0.00061	0.0389	-0.001	0.0121	0
59	SLE RA 26	0.01606	0.0006	0.03372	-0.0008	0.0107	0
59	SLE RA 27	0.01607	0.0006	0.03372	-0.001	0.0107	0
59	SLE RA 28	0.01693	0.00061	0.03593	-0.0008	0.0113	0
59	SLE RA 29	0.01693	0.0006	0.03593	-0.001	0.0113	0
59	SLE RA 30	0.01752	0.00061	0.03714	-0.0008	0.0116	0
59	SLE RA 31	0.01752	0.00061	0.03715	-0.001	0.0116	0
59	SLE RA 32	0.01838	0.00062	0.03935	-0.0008	0.0122	0
59	SLE RA 33	0.01838	0.00062	0.03936	-0.001	0.0122	0
59	SLE FR 1	0.01305	0.00057	0.02725	-0.0007	0.0091	0
59	SLE FR 2	0.01305	0.00057	0.02726	-0.0009	0.0091	0
59	SLE FR 3	0.01391	0.00057	0.02946	-0.0007	0.0096	0
59	SLE FR 4	0.01363	0.00057	0.02862	-0.0007	0.0094	0
59	SLE FR 5	0.01425	0.00058	0.02984	-0.0008	0.0097	0
59	SLE QP 1	0.01305	0.00057	0.02725	-0.0007	0.0091	0
59	SLO 1	-0.0777	-0.00317	-0.13573	-0.0324	0.0162	0.0012
59	SLO 2	-0.0777	-0.00317	-0.13573	-0.0324	0.0162	0.0012
59	SLO 3	-0.0777	0.00431	-0.13573	0.0327	0.0162	-0.0012
59	SLO 4	-0.0777	0.00431	-0.13573	0.0327	0.0162	-0.0012
59	SLO 5	-0.01418	-0.01189	-0.02164	-0.1089	0.0112	0.0041
59	SLO 6	-0.01418	-0.01189	-0.02164	-0.1089	0.0112	0.0041
59	SLO 7	-0.01418	0.01303	-0.02164	0.108	0.0112	-0.0041
59	SLO 8	-0.01418	0.01303	-0.02164	0.108	0.0112	-0.0041
59	SLO 9	0.04027	-0.01189	0.07615	-0.1094	0.0069	0.0041
59	SLO 10	0.04027	-0.01189	0.07615	-0.1094	0.0069	0.0041
59	SLO 11	0.04027	0.01303	0.07615	0.1075	0.0069	-0.0041
59	SLO 12	0.04027	0.01303	0.07615	0.1075	0.0069	-0.0041
59	SLO 13	0.10379	-0.00317	0.19024	-0.0341	0.0019	0.0012
59	SLO 14	0.10379	-0.00317	0.19024	-0.0341	0.0019	0.0012
59	SLO 15	0.10379	0.00431	0.19024	0.0309	0.0019	-0.0012
59	SLO 16	0.10379	0.00431	0.19024	0.0309	0.0019	-0.0012
59	SLD 1	-0.06141	-0.00288	-0.10648	-0.0301	0.0149	0.0012
59	SLD 2	-0.06141	-0.00288	-0.10648	-0.0301	0.0149	0.0012
59	SLD 3	-0.06141	0.00403	-0.10648	0.03	0.0149	-0.0011
59	SLD 4	-0.06141	0.00403	-0.10648	0.03	0.0149	-0.0011
59	SLD 5	-0.00929	-0.01094	-0.01287	-0.1007	0.0108	0.0038
59	SLD 6	-0.00929	-0.01094	-0.01287	-0.1007	0.0108	0.0038
59	SLD 7	-0.00929	0.01208	-0.01287	0.0997	0.0108	-0.0038
59	SLD 8	-0.00929	0.01208	-0.01287	0.0997	0.0108	-0.0038
59	SLD 9	0.03538	-0.01094	0.06737	-0.1011	0.0073	0.0038
59	SLD 10	0.03538	-0.01094	0.06737	-0.1011	0.0073	0.0038
59	SLD 11	0.03539	0.01208	0.06737	0.0993	0.0073	-0.0038
59	SLD 12	0.03539	0.01208	0.06737	0.0993	0.0073	-0.0038

Nodo	Cont.	Spostamento			Rotazione		
Ind.	N.br.	ux	uy	uz	rx	ry	rz
59	SLD 13	0.08751	-0.00289	0.16099	-0.0315	0.0032	0.0012
59	SLD 14	0.08751	-0.00289	0.16099	-0.0315	0.0032	0.0012
59	SLD 15	0.08751	0.00402	0.16099	0.0286	0.0032	-0.0011
59	SLD 16	0.08751	0.00402	0.16099	0.0286	0.0032	-0.0011
59	SLV 1	-0.15329	-0.00854	-0.27151	-0.0784	0.0222	0.003
59	SLV 2	-0.15329	-0.00854	-0.27151	-0.0784	0.0222	0.003
59	SLV 3	-0.15329	0.00968	-0.27151	0.0802	0.0222	-0.003
59	SLV 4	-0.15329	0.00968	-0.27151	0.0802	0.0222	-0.003
59	SLV 5	-0.03685	-0.0298	-0.06238	-0.2646	0.013	0.0101
59	SLV 6	-0.03685	-0.0298	-0.06238	-0.2646	0.013	0.0101
59	SLV 7	-0.03685	0.03094	-0.06238	0.2641	0.013	-0.01
59	SLV 8	-0.03685	0.03094	-0.06238	0.2641	0.013	-0.01
59	SLV 9	0.06295	-0.0298	0.11688	-0.2655	0.0052	0.0101
59	SLV 10	0.06295	-0.0298	0.11688	-0.2655	0.0052	0.0101
59	SLV 11	0.06295	0.03094	0.11688	0.2631	0.0052	-0.01
59	SLV 12	0.06295	0.03094	0.11688	0.2631	0.0052	-0.01
59	SLV 13	0.17939	-0.00854	0.32602	-0.0816	-0.004	0.003
59	SLV 14	0.17939	-0.00854	0.32602	-0.0816	-0.004	0.003
59	SLV 15	0.17939	0.00968	0.32602	0.077	-0.004	-0.003
59	SLV 16	0.17939	0.00968	0.32602	0.077	-0.004	-0.003
60	SLU 1	0.0241	0.00059	-0.00778	-0.0009	0.01	0.0014
60	SLU 2	0.0241	0.00059	-0.00778	-0.001	0.01	0.0015
60	SLU 3	0.02619	0.0006	-0.0074	-0.001	0.011	0.0015
60	SLU 4	0.02932	0.00061	-0.00683	-0.0009	0.0124	0.0014
60	SLU 5	0.02932	0.00061	-0.00683	-0.001	0.0124	0.0015
60	SLU 6	0.02772	0.00061	-0.00749	-0.001	0.0115	0.0015
60	SLU 7	0.02981	0.00062	-0.00711	-0.001	0.0124	0.0015
60	SLU 8	0.03294	0.00063	-0.00653	-0.001	0.0139	0.0014
60	SLU 9	0.03294	0.00063	-0.00653	-0.001	0.0139	0.0015
60	SLU 10	0.03133	0.00063	-0.00719	-0.001	0.0129	0.0015
60	SLU 11	0.03134	0.00063	-0.00719	-0.001	0.0129	0.0016
60	SLU 12	0.03342	0.00064	-0.00681	-0.001	0.0139	0.0015
60	SLU 13	0.03343	0.00064	-0.00681	-0.001	0.0139	0.0016
60	SLU 14	0.02718	0.00062	-0.00783	-0.0011	0.0111	0.0017
60	SLU 15	0.02927	0.00062	-0.00745	-0.0011	0.0121	0.0017
60	SLU 16	0.0324	0.00064	-0.00688	-0.001	0.0135	0.0016
60	SLU 17	0.0324	0.00064	-0.00688	-0.0011	0.0135	0.0017
60	SLU 18	0.0308	0.00064	-0.00754	-0.0011	0.0126	0.0018
60	SLU 19	0.03289	0.00064	-0.00715	-0.0011	0.0135	0.0018
60	SLU 20	0.03602	0.00066	-0.00658	-0.0011	0.015	0.0017
60	SLU 21	0.03602	0.00066	-0.00658	-0.0011	0.015	0.0017
60	SLU 22	0.03441	0.00066	-0.00724	-0.0011	0.014	0.0017
60	SLU 23	0.03442	0.00066	-0.00724	-0.0011	0.014	0.0018
60	SLU 24	0.0365	0.00066	-0.00686	-0.0011	0.015	0.0017
60	SLU 25	0.0365	0.00066	-0.00686	-0.0011	0.015	0.0018
60	SLU 26	0.0318	0.00065	-0.0079	-0.0012	0.0128	0.0019
60	SLU 27	0.0318	0.00065	-0.0079	-0.0012	0.0128	0.002
60	SLU 28	0.03388	0.00066	-0.00752	-0.0012	0.0137	0.0019
60	SLU 29	0.03389	0.00066	-0.00752	-0.0012	0.0137	0.002
60	SLU 30	0.03541	0.00067	-0.00761	-0.0012	0.0142	0.002
60	SLU 31	0.03542	0.00067	-0.00761	-0.0013	0.0142	0.0021
60	SLU 32	0.0375	0.00068	-0.00723	-0.0012	0.0152	0.002
60	SLU 33	0.03751	0.00068	-0.00723	-0.0013	0.0152	0.0021
60	SLU 34	0.0241	0.00059	-0.00778	-0.0009	0.01	0.0014
60	SLU 35	0.0241	0.00059	-0.00778	-0.001	0.01	0.0015
60	SLU 36	0.02619	0.0006	-0.0074	-0.001	0.011	0.0015
60	SLU 37	0.02932	0.00061	-0.00683	-0.0009	0.0124	0.0014
60	SLU 38	0.02932	0.00061	-0.00683	-0.001	0.0124	0.0015
60	SLU 39	0.02772	0.00061	-0.00749	-0.001	0.0115	0.0015
60	SLU 40	0.02981	0.00062	-0.00711	-0.001	0.0124	0.0015
60	SLU 41	0.03294	0.00063	-0.00653	-0.001	0.0139	0.0014
60	SLU 42	0.03294	0.00063	-0.00653	-0.001	0.0139	0.0015
60	SLU 43	0.03133	0.00063	-0.00719	-0.001	0.0129	0.0015
60	SLU 44	0.03134	0.00063	-0.00719	-0.001	0.0129	0.0016
60	SLU 45	0.03342	0.00064	-0.00681	-0.001	0.0139	0.0015
60	SLU 46	0.03343	0.00064	-0.00681	-0.001	0.0139	0.0016
60	SLU 47	0.02718	0.00062	-0.00783	-0.0011	0.0111	0.0017
60	SLU 48	0.02927	0.00062	-0.00745	-0.0011	0.0121	0.0017
60	SLU 49	0.0324	0.00064	-0.00688	-0.001	0.0135	0.0016
60	SLU 50	0.0324	0.00064	-0.00688	-0.0011	0.0135	0.0017
60	SLU 51	0.0308	0.00064	-0.00754	-0.0011	0.0126	0.0018
60	SLU 52	0.03289	0.00064	-0.00715	-0.0011	0.0135	0.0018
60	SLU 53	0.03602	0.00066	-0.00658	-0.0011	0.015	0.0017
60	SLU 54	0.03602	0.00066	-0.00658	-0.0011	0.015	0.0017
60	SLU 55	0.03441	0.00066	-0.00724	-0.0011	0.014	0.0017
60	SLU 56	0.03442	0.00066	-0.00724	-0.0011	0.014	0.0018
60	SLU 57	0.0365	0.00066	-0.00686	-0.0011	0.015	0.0017
60	SLU 58	0.0365	0.00066	-0.00686	-0.0011	0.015	0.0018
60	SLU 59	0.0318	0.00065	-0.0079	-0.0012	0.0128	0.0019
60	SLU 60	0.0318	0.00065	-0.0079	-0.0012	0.0128	0.002
60	SLU 61	0.03388	0.00066	-0.00752	-0.0012	0.0137	0.0019
60	SLU 62	0.03389	0.00066	-0.00752	-0.0012	0.0137	0.002
60	SLU 63	0.03541	0.00067	-0.00761	-0.0012	0.0142	0.002
60	SLU 64	0.03542	0.00067	-0.00761	-0.0013	0.0142	0.0021
60	SLU 65	0.0375	0.00068	-0.00723	-0.0012	0.0152	0.002
60	SLU 66	0.03751	0.00068	-0.00723	-0.0013	0.0152	0.0021
60	SLU 67	0.03133	0.00077	-0.01012	-0.0012	0.013	0.0018
60	SLU 68	0.03133	0.00077	-0.01012	-0.0013	0.013	0.0019
60	SLU 69	0.03342	0.00078	-0.00974	-0.0013	0.014	0.0019
60	SLU 70	0.03655	0.00079	-0.00916	-0.0012	0.0154	0.0018
60	SLU 71	0.03655	0.00079	-0.00916	-0.0013	0.0154	0.0019
60	SLU 72	0.03495	0.00079	-0.00982	-0.0013	0.0145	0.0019
60	SLU 73	0.03704	0.0008	-0.00944	-0.0013	0.0154	0.002
60	SLU 74	0.04017	0.00081	-0.00887	-0.0012	0.0169	0.0019
60	SLU 75	0.04017	0.00081	-0.00887	-0.0013	0.0169	0.0019

Nodo	Cont.	Spostamento			Rotazione		
Ind.	N.br.	ux	uy	uz	rx	ry	rz
60	SLU 76	0.03856	0.00081	-0.00953	-0.0013	0.0159	0.0019
60	SLU 77	0.03857	0.00081	-0.00953	-0.0013	0.016	0.002
60	SLU 78	0.04065	0.00082	-0.00915	-0.0013	0.0169	0.0019
60	SLU 79	0.04065	0.00082	-0.00915	-0.0013	0.0169	0.002
60	SLU 80	0.03441	0.00079	-0.01017	-0.0014	0.0141	0.0021
60	SLU 81	0.0365	0.0008	-0.00978	-0.0014	0.0151	0.0021
60	SLU 82	0.03963	0.00081	-0.00921	-0.0013	0.0165	0.002
60	SLU 83	0.03963	0.00081	-0.00921	-0.0014	0.0165	0.0021
60	SLU 84	0.03803	0.00081	-0.00987	-0.0014	0.0156	0.0022
60	SLU 85	0.04012	0.00082	-0.00949	-0.0014	0.0165	0.0022
60	SLU 86	0.04325	0.00083	-0.00892	-0.0013	0.018	0.0021
60	SLU 87	0.04325	0.00083	-0.00892	-0.0014	0.018	0.0022
60	SLU 88	0.04164	0.00083	-0.00958	-0.0014	0.017	0.0021
60	SLU 89	0.04165	0.00083	-0.00958	-0.0014	0.0171	0.0022
60	SLU 90	0.04373	0.00084	-0.0092	-0.0014	0.018	0.0021
60	SLU 91	0.04373	0.00084	-0.00919	-0.0014	0.018	0.0022
60	SLU 92	0.03903	0.00082	-0.01024	-0.0015	0.0158	0.0023
60	SLU 93	0.03903	0.00083	-0.01024	-0.0015	0.0158	0.0024
60	SLU 94	0.04111	0.00083	-0.00986	-0.0015	0.0167	0.0024
60	SLU 95	0.04112	0.00083	-0.00986	-0.0015	0.0167	0.0024
60	SLU 96	0.04264	0.00085	-0.00994	-0.0015	0.0172	0.0024
60	SLU 97	0.04265	0.00085	-0.00994	-0.0015	0.0172	0.0025
60	SLU 98	0.04473	0.00085	-0.00956	-0.0015	0.0182	0.0024
60	SLU 99	0.04473	0.00085	-0.00956	-0.0015	0.0182	0.0025
60	SLU 100	0.03133	0.00077	-0.01012	-0.0012	0.013	0.0018
60	SLU 101	0.03133	0.00077	-0.01012	-0.0013	0.013	0.0019
60	SLU 102	0.03342	0.00078	-0.00974	-0.0013	0.014	0.0019
60	SLU 103	0.03655	0.00079	-0.00916	-0.0012	0.0154	0.0018
60	SLU 104	0.03655	0.00079	-0.00916	-0.0013	0.0154	0.0019
60	SLU 105	0.03495	0.00079	-0.00982	-0.0013	0.0145	0.0019
60	SLU 106	0.03704	0.0008	-0.00944	-0.0013	0.0154	0.002
60	SLU 107	0.04017	0.00081	-0.00887	-0.0012	0.0169	0.0019
60	SLU 108	0.04017	0.00081	-0.00887	-0.0013	0.0169	0.0019
60	SLU 109	0.03856	0.00081	-0.00953	-0.0013	0.0159	0.0019
60	SLU 110	0.03857	0.00081	-0.00953	-0.0013	0.016	0.002
60	SLU 111	0.04065	0.00082	-0.00915	-0.0013	0.0169	0.0019
60	SLU 112	0.04065	0.00082	-0.00915	-0.0013	0.0169	0.002
60	SLU 113	0.03441	0.00079	-0.01017	-0.0014	0.0141	0.0021
60	SLU 114	0.0365	0.0008	-0.00978	-0.0014	0.0151	0.0021
60	SLU 115	0.03963	0.00081	-0.00921	-0.0013	0.0165	0.002
60	SLU 116	0.03963	0.00081	-0.00921	-0.0014	0.0165	0.0021
60	SLU 117	0.03803	0.00081	-0.00987	-0.0014	0.0156	0.0022
60	SLU 118	0.04012	0.00082	-0.00949	-0.0014	0.0165	0.0022
60	SLU 119	0.04325	0.00083	-0.00892	-0.0013	0.018	0.0021
60	SLU 120	0.04325	0.00083	-0.00892	-0.0014	0.018	0.0022
60	SLU 121	0.04164	0.00083	-0.00958	-0.0014	0.017	0.0021
60	SLU 122	0.04165	0.00083	-0.00958	-0.0014	0.0171	0.0022
60	SLU 123	0.04373	0.00084	-0.0092	-0.0014	0.018	0.0021
60	SLU 124	0.04373	0.00084	-0.00919	-0.0014	0.018	0.0022
60	SLU 125	0.03903	0.00082	-0.01024	-0.0015	0.0158	0.0023
60	SLU 126	0.03903	0.00083	-0.01024	-0.0015	0.0158	0.0024
60	SLU 127	0.04111	0.00083	-0.00986	-0.0015	0.0167	0.0024
60	SLU 128	0.04112	0.00083	-0.00986	-0.0015	0.0167	0.0024
60	SLU 129	0.04264	0.00085	-0.00994	-0.0015	0.0172	0.0024
60	SLU 130	0.04265	0.00085	-0.00994	-0.0015	0.0172	0.0025
60	SLU 131	0.04473	0.00085	-0.00956	-0.0015	0.0182	0.0024
60	SLU 132	0.04473	0.00085	-0.00956	-0.0015	0.0182	0.0025
60	SLE RA 1	0.0241	0.00059	-0.00778	-0.0009	0.01	0.0014
60	SLE RA 2	0.0241	0.00059	-0.00778	-0.001	0.01	0.0015
60	SLE RA 3	0.02549	0.0006	-0.00753	-0.001	0.0106	0.0015
60	SLE RA 4	0.02758	0.00061	-0.00715	-0.0009	0.0116	0.0014
60	SLE RA 5	0.02758	0.00061	-0.00715	-0.001	0.0116	0.0014
60	SLE RA 6	0.02651	0.00061	-0.00759	-0.001	0.011	0.0015
60	SLE RA 7	0.02791	0.00061	-0.00733	-0.001	0.0116	0.0015
60	SLE RA 8	0.02999	0.00062	-0.00695	-0.0009	0.0126	0.0014
60	SLE RA 9	0.02999	0.00062	-0.00695	-0.001	0.0126	0.0015
60	SLE RA 10	0.02892	0.00062	-0.00739	-0.001	0.012	0.0014
60	SLE RA 11	0.02892	0.00062	-0.00739	-0.001	0.012	0.0015
60	SLE RA 12	0.03031	0.00063	-0.00714	-0.001	0.0126	0.0014
60	SLE RA 13	0.03032	0.00063	-0.00714	-0.001	0.0126	0.0015
60	SLE RA 14	0.02615	0.00061	-0.00781	-0.001	0.0107	0.0016
60	SLE RA 15	0.02755	0.00061	-0.00756	-0.001	0.0114	0.0016
60	SLE RA 16	0.02963	0.00062	-0.00718	-0.001	0.0123	0.0015
60	SLE RA 17	0.02963	0.00062	-0.00718	-0.001	0.0123	0.0016
60	SLE RA 18	0.02857	0.00062	-0.00762	-0.0011	0.0117	0.0016
60	SLE RA 19	0.02996	0.00063	-0.00736	-0.0011	0.0124	0.0016
60	SLE RA 20	0.03204	0.00063	-0.00698	-0.001	0.0133	0.0016
60	SLE RA 21	0.03205	0.00064	-0.00698	-0.0011	0.0133	0.0016
60	SLE RA 22	0.03097	0.00063	-0.00742	-0.001	0.0127	0.0016
60	SLE RA 23	0.03098	0.00063	-0.00742	-0.0011	0.0127	0.0016
60	SLE RA 24	0.03237	0.00064	-0.00717	-0.001	0.0133	0.0016
60	SLE RA 25	0.03237	0.00064	-0.00717	-0.0011	0.0133	0.0016
60	SLE RA 26	0.02923	0.00063	-0.00786	-0.0011	0.0118	0.0017
60	SLE RA 27	0.02923	0.00063	-0.00786	-0.0011	0.0118	0.0018
60	SLE RA 28	0.03062	0.00063	-0.00761	-0.0011	0.0125	0.0018
60	SLE RA 29	0.03062	0.00063	-0.00761	-0.0011	0.0125	0.0018
60	SLE RA 30	0.03164	0.00064	-0.00767	-0.0011	0.0128	0.0018
60	SLE RA 31	0.03164	0.00064	-0.00767	-0.0012	0.0128	0.0018
60	SLE RA 32	0.03303	0.00065	-0.00741	-0.0011	0.0135	0.0018
60	SLE RA 33	0.03304	0.00065	-0.00741	-0.0012	0.0135	0.0018
60	SLE FR 1	0.0241	0.00059	-0.00778	-0.0009	0.01	0.0014
60	SLE FR 2	0.0241	0.00059	-0.00778	-0.001	0.01	0.0014
60	SLE FR 3	0.02549	0.0006	-0.00753	-0.0009	0.0106	0.0014
60	SLE FR 4	0.02506	0.0006	-0.0077	-0.0009	0.0104	0.0014
60	SLE FR 5	0.02615	0.00061	-0.00782	-0.001	0.0107	0.0015

Nodo	Cont.	Spostamento			Rotazione		
Ind.	N.br.	ux	uy	uz	rx	ry	rz
60	SLE QP 1	0.0241	0.00059	-0.00778	-0.0009	0.01	0.0014
60	SLO 1	-0.06926	0.00042	-0.04754	-0.1106	-0.04	0.2639
60	SLO 2	-0.06926	0.00042	-0.04754	-0.1106	-0.04	0.2639
60	SLO 3	-0.06926	0.00077	-0.04754	0.1087	-0.04	-0.261
60	SLO 4	-0.06926	0.00077	-0.04754	0.1087	-0.04	-0.261
60	SLO 5	-0.00391	0.00002	-0.01971	-0.3664	-0.005	0.8762
60	SLO 6	-0.00391	0.00002	-0.01971	-0.3664	-0.005	0.8762
60	SLO 7	-0.00391	0.00117	-0.01971	0.3646	-0.005	-0.8734
60	SLO 8	-0.00391	0.00117	-0.01971	0.3646	-0.005	-0.8734
60	SLO 9	0.05211	0.00002	0.00414	-0.3664	0.025	0.8762
60	SLO 10	0.05211	0.00002	0.00414	-0.3664	0.025	0.8762
60	SLO 11	0.05211	0.00117	0.00414	0.3646	0.025	-0.8735
60	SLO 12	0.05211	0.00117	0.00414	0.3646	0.025	-0.8735
60	SLO 13	0.11746	0.00042	0.03198	-0.1105	0.06	0.2638
60	SLO 14	0.11746	0.00042	0.03198	-0.1105	0.06	0.2638
60	SLO 15	0.11746	0.00076	0.03198	0.1088	0.06	-0.2611
60	SLO 16	0.11746	0.00076	0.03198	0.1088	0.06	-0.2611
60	SLD 1	-0.05251	0.00044	-0.04041	-0.1023	-0.031	0.2439
60	SLD 2	-0.05251	0.00044	-0.04041	-0.1023	-0.031	0.2439
60	SLD 3	-0.05251	0.00075	-0.04041	0.1004	-0.031	-0.2411
60	SLD 4	-0.05251	0.00075	-0.04041	0.1004	-0.031	-0.2411
60	SLD 5	0.00112	0.00006	-0.01757	-0.3386	-0.0023	0.8097
60	SLD 6	0.00112	0.00006	-0.01757	-0.3386	-0.0023	0.8097
60	SLD 7	0.00112	0.00112	-0.01757	0.3368	-0.0023	-0.8069
60	SLD 8	0.00112	0.00112	-0.01757	0.3368	-0.0023	-0.8069
60	SLD 9	0.04708	0.00006	0.002	-0.3386	0.0223	0.8097
60	SLD 10	0.04708	0.00006	0.002	-0.3386	0.0223	0.8097
60	SLD 11	0.04708	0.00112	0.002	0.3368	0.0223	-0.807
60	SLD 12	0.04708	0.00112	0.002	0.3368	0.0223	-0.807
60	SLD 13	0.1007	0.00043	0.02484	-0.1022	0.0511	0.2439
60	SLD 14	0.1007	0.00043	0.02484	-0.1022	0.0511	0.2439
60	SLD 15	0.1007	0.00075	0.02484	0.1004	0.0511	-0.2412
60	SLD 16	0.1007	0.00075	0.02484	0.1004	0.0511	-0.2412
60	SLV 1	-0.14704	0.00018	-0.08067	-0.2682	-0.0817	0.6411
60	SLV 2	-0.14704	0.00018	-0.08067	-0.2682	-0.0817	0.6411
60	SLV 3	-0.14704	0.00102	-0.08067	0.2662	-0.0817	-0.6382
60	SLV 4	-0.14704	0.00102	-0.08067	0.2662	-0.0817	-0.6382
60	SLV 5	-0.02724	-0.00081	-0.02965	-0.8917	-0.0175	2.1334
60	SLV 6	-0.02724	-0.00081	-0.02965	-0.8917	-0.0175	2.1334
60	SLV 7	-0.02724	0.002	-0.02965	0.8898	-0.0175	-2.1306
60	SLV 8	-0.02724	0.002	-0.02965	0.8898	-0.0175	-2.1306
60	SLV 9	0.07544	-0.00081	0.01408	-0.8916	0.0375	2.1334
60	SLV 10	0.07544	-0.00081	0.01408	-0.8916	0.0375	2.1334
60	SLV 11	0.07544	0.00199	0.01408	0.8898	0.0375	-2.1306
60	SLV 12	0.07544	0.00199	0.01408	0.8898	0.0375	-2.1306
60	SLV 13	0.19523	0.00017	0.0651	-0.2681	0.1017	0.6409
60	SLV 14	0.19523	0.00017	0.0651	-0.2681	0.1017	0.6409
60	SLV 15	0.19523	0.00101	0.0651	0.2664	0.1017	-0.6383
60	SLV 16	0.19523	0.00101	0.0651	0.2664	0.1017	-0.6383
61	SLU 1	-0.0241	0.00167	-0.00778	-0.0026	-0.01	-0.004
61	SLU 2	-0.0241	0.00167	-0.00778	-0.0026	-0.01	-0.004
61	SLU 3	-0.02619	0.00169	-0.0074	-0.0026	-0.011	-0.004
61	SLU 4	-0.02932	0.00172	-0.00683	-0.0027	-0.0124	-0.0041
61	SLU 5	-0.02932	0.00173	-0.00683	-0.0027	-0.0124	-0.0041
61	SLU 6	-0.02747	0.00172	-0.00761	-0.0027	-0.0113	-0.0041
61	SLU 7	-0.02956	0.00175	-0.00723	-0.0027	-0.0123	-0.0042
61	SLU 8	-0.03269	0.00178	-0.00665	-0.0028	-0.0137	-0.0042
61	SLU 9	-0.03269	0.00178	-0.00665	-0.0028	-0.0137	-0.0042
61	SLU 10	-0.03083	0.00178	-0.00743	-0.0028	-0.0127	-0.0042
61	SLU 11	-0.03083	0.00178	-0.00743	-0.0028	-0.0127	-0.0042
61	SLU 12	-0.03292	0.00181	-0.00705	-0.0028	-0.0136	-0.0043
61	SLU 13	-0.03292	0.00181	-0.00705	-0.0028	-0.0136	-0.0043
61	SLU 14	-0.02676	0.00173	-0.00803	-0.0028	-0.0109	-0.0043
61	SLU 15	-0.02885	0.00175	-0.00765	-0.0028	-0.0118	-0.0043
61	SLU 16	-0.03198	0.00179	-0.00708	-0.0028	-0.0133	-0.0044
61	SLU 17	-0.03198	0.00179	-0.00708	-0.0028	-0.0133	-0.0044
61	SLU 18	-0.03012	0.00179	-0.00786	-0.0029	-0.0122	-0.0044
61	SLU 19	-0.03221	0.00181	-0.00747	-0.0029	-0.0132	-0.0045
61	SLU 20	-0.03535	0.00185	-0.0069	-0.0029	-0.0146	-0.0045
61	SLU 21	-0.03535	0.00185	-0.0069	-0.0029	-0.0146	-0.0045
61	SLU 22	-0.03349	0.00185	-0.00768	-0.0029	-0.0135	-0.0046
61	SLU 23	-0.03349	0.00185	-0.00768	-0.0029	-0.0135	-0.0046
61	SLU 24	-0.03558	0.00187	-0.0073	-0.003	-0.0145	-0.0046
61	SLU 25	-0.03558	0.00187	-0.0073	-0.003	-0.0145	-0.0046
61	SLU 26	-0.03074	0.00183	-0.0084	-0.003	-0.0122	-0.0048
61	SLU 27	-0.03074	0.00183	-0.0084	-0.003	-0.0122	-0.0048
61	SLU 28	-0.03283	0.00185	-0.00802	-0.003	-0.0131	-0.0048
61	SLU 29	-0.03283	0.00185	-0.00802	-0.0031	-0.0131	-0.0048
61	SLU 30	-0.03411	0.00188	-0.00823	-0.0031	-0.0135	-0.0049
61	SLU 31	-0.03411	0.00188	-0.00823	-0.0031	-0.0135	-0.0049
61	SLU 32	-0.0362	0.00191	-0.00785	-0.0031	-0.0145	-0.005
61	SLU 33	-0.0362	0.00191	-0.00785	-0.0031	-0.0145	-0.005
61	SLU 34	-0.0241	0.00167	-0.00778	-0.0026	-0.01	-0.004
61	SLU 35	-0.0241	0.00167	-0.00778	-0.0026	-0.01	-0.004
61	SLU 36	-0.02619	0.00169	-0.0074	-0.0026	-0.011	-0.004
61	SLU 37	-0.02932	0.00172	-0.00683	-0.0027	-0.0124	-0.0041
61	SLU 38	-0.02932	0.00173	-0.00683	-0.0027	-0.0124	-0.0041
61	SLU 39	-0.02747	0.00172	-0.00761	-0.0027	-0.0113	-0.0041
61	SLU 40	-0.02956	0.00175	-0.00723	-0.0027	-0.0123	-0.0042
61	SLU 41	-0.03269	0.00178	-0.00665	-0.0028	-0.0137	-0.0042
61	SLU 42	-0.03269	0.00178	-0.00665	-0.0028	-0.0137	-0.0042
61	SLU 43	-0.03083	0.00178	-0.00743	-0.0028	-0.0127	-0.0042
61	SLU 44	-0.03083	0.00178	-0.00743	-0.0028	-0.0127	-0.0042
61	SLU 45	-0.03292	0.00181	-0.00705	-0.0028	-0.0136	-0.0043
61	SLU 46	-0.03292	0.00181	-0.00705	-0.0028	-0.0136	-0.0043

Nodo	Cont.	Spostamento			Rotazione		
Ind.	N.br.	ux	uy	uz	rx	ry	rz
61	SLU 47	-0.02676	0.00173	-0.00803	-0.0028	-0.0109	-0.0043
61	SLU 48	-0.02885	0.00175	-0.00765	-0.0028	-0.0118	-0.0043
61	SLU 49	-0.03198	0.00179	-0.00708	-0.0028	-0.0133	-0.0044
61	SLU 50	-0.03198	0.00179	-0.00708	-0.0028	-0.0133	-0.0044
61	SLU 51	-0.03012	0.00179	-0.00786	-0.0029	-0.0122	-0.0044
61	SLU 52	-0.03221	0.00181	-0.00747	-0.0029	-0.0132	-0.0045
61	SLU 53	-0.03535	0.00185	-0.0069	-0.0029	-0.0146	-0.0045
61	SLU 54	-0.03535	0.00185	-0.0069	-0.0029	-0.0146	-0.0045
61	SLU 55	-0.03349	0.00185	-0.00768	-0.0029	-0.0135	-0.0046
61	SLU 56	-0.03349	0.00185	-0.00768	-0.0029	-0.0135	-0.0046
61	SLU 57	-0.03558	0.00187	-0.0073	-0.003	-0.0145	-0.0046
61	SLU 58	-0.03558	0.00187	-0.0073	-0.003	-0.0145	-0.0046
61	SLU 59	-0.03074	0.00183	-0.0084	-0.003	-0.0122	-0.0048
61	SLU 60	-0.03074	0.00183	-0.0084	-0.003	-0.0122	-0.0048
61	SLU 61	-0.03283	0.00185	-0.00802	-0.003	-0.0131	-0.0048
61	SLU 62	-0.03283	0.00185	-0.00802	-0.0031	-0.0131	-0.0048
61	SLU 63	-0.03411	0.00188	-0.00823	-0.0031	-0.0135	-0.0049
61	SLU 64	-0.03411	0.00188	-0.00823	-0.0031	-0.0135	-0.0049
61	SLU 65	-0.0362	0.00191	-0.00785	-0.0031	-0.0145	-0.005
61	SLU 66	-0.0362	0.00191	-0.00785	-0.0031	-0.0145	-0.005
61	SLU 67	-0.03133	0.00217	-0.01012	-0.0034	-0.013	-0.0051
61	SLU 68	-0.03133	0.00217	-0.01012	-0.0034	-0.013	-0.0052
61	SLU 69	-0.03342	0.00219	-0.00973	-0.0034	-0.014	-0.0052
61	SLU 70	-0.03655	0.00222	-0.00916	-0.0034	-0.0154	-0.0053
61	SLU 71	-0.03655	0.00222	-0.00916	-0.0034	-0.0154	-0.0053
61	SLU 72	-0.0347	0.00222	-0.00994	-0.0035	-0.0143	-0.0053
61	SLU 73	-0.03679	0.00225	-0.00956	-0.0035	-0.0153	-0.0053
61	SLU 74	-0.03992	0.00228	-0.00899	-0.0035	-0.0167	-0.0054
61	SLU 75	-0.03992	0.00228	-0.00899	-0.0035	-0.0167	-0.0054
61	SLU 76	-0.03806	0.00228	-0.00977	-0.0036	-0.0157	-0.0054
61	SLU 77	-0.03806	0.00228	-0.00977	-0.0036	-0.0157	-0.0054
61	SLU 78	-0.04015	0.00231	-0.00939	-0.0036	-0.0166	-0.0055
61	SLU 79	-0.04015	0.00231	-0.00939	-0.0036	-0.0166	-0.0055
61	SLU 80	-0.03399	0.00223	-0.01036	-0.0035	-0.0139	-0.0055
61	SLU 81	-0.03608	0.00225	-0.00998	-0.0036	-0.0148	-0.0055
61	SLU 82	-0.03921	0.00229	-0.00941	-0.0036	-0.0163	-0.0056
61	SLU 83	-0.03921	0.00229	-0.00941	-0.0036	-0.0163	-0.0056
61	SLU 84	-0.03735	0.00229	-0.01019	-0.0036	-0.0152	-0.0056
61	SLU 85	-0.03944	0.00231	-0.00981	-0.0037	-0.0162	-0.0057
61	SLU 86	-0.04258	0.00235	-0.00924	-0.0037	-0.0176	-0.0057
61	SLU 87	-0.04258	0.00235	-0.00924	-0.0037	-0.0176	-0.0057
61	SLU 88	-0.04072	0.00235	-0.01002	-0.0037	-0.0165	-0.0058
61	SLU 89	-0.04072	0.00235	-0.01002	-0.0037	-0.0165	-0.0058
61	SLU 90	-0.04281	0.00237	-0.00963	-0.0038	-0.0175	-0.0058
61	SLU 91	-0.04281	0.00237	-0.00963	-0.0038	-0.0175	-0.0058
61	SLU 92	-0.03797	0.00232	-0.01074	-0.0038	-0.0152	-0.006
61	SLU 93	-0.03797	0.00233	-0.01074	-0.0038	-0.0152	-0.006
61	SLU 94	-0.04006	0.00235	-0.01036	-0.0038	-0.0161	-0.006
61	SLU 95	-0.04006	0.00235	-0.01036	-0.0038	-0.0161	-0.006
61	SLU 96	-0.04134	0.00238	-0.01056	-0.0039	-0.0165	-0.0061
61	SLU 97	-0.04134	0.00238	-0.01056	-0.0039	-0.0165	-0.0061
61	SLU 98	-0.04343	0.00241	-0.01018	-0.0039	-0.0175	-0.0061
61	SLU 99	-0.04343	0.00241	-0.01018	-0.0039	-0.0175	-0.0061
61	SLU 100	-0.03133	0.00217	-0.01012	-0.0034	-0.013	-0.0051
61	SLU 101	-0.03133	0.00217	-0.01012	-0.0034	-0.013	-0.0052
61	SLU 102	-0.03342	0.00219	-0.00973	-0.0034	-0.014	-0.0052
61	SLU 103	-0.03655	0.00222	-0.00916	-0.0034	-0.0154	-0.0053
61	SLU 104	-0.03655	0.00222	-0.00916	-0.0034	-0.0154	-0.0053
61	SLU 105	-0.0347	0.00222	-0.00994	-0.0035	-0.0143	-0.0053
61	SLU 106	-0.03679	0.00225	-0.00956	-0.0035	-0.0153	-0.0053
61	SLU 107	-0.03992	0.00228	-0.00899	-0.0035	-0.0167	-0.0054
61	SLU 108	-0.03992	0.00228	-0.00899	-0.0035	-0.0167	-0.0054
61	SLU 109	-0.03806	0.00228	-0.00977	-0.0036	-0.0157	-0.0054
61	SLU 110	-0.03806	0.00228	-0.00977	-0.0036	-0.0157	-0.0054
61	SLU 111	-0.04015	0.00231	-0.00939	-0.0036	-0.0166	-0.0055
61	SLU 112	-0.04015	0.00231	-0.00939	-0.0036	-0.0166	-0.0055
61	SLU 113	-0.03399	0.00223	-0.01036	-0.0035	-0.0139	-0.0055
61	SLU 114	-0.03608	0.00225	-0.00998	-0.0036	-0.0148	-0.0055
61	SLU 115	-0.03921	0.00229	-0.00941	-0.0036	-0.0163	-0.0056
61	SLU 116	-0.03921	0.00229	-0.00941	-0.0036	-0.0163	-0.0056
61	SLU 117	-0.03735	0.00229	-0.01019	-0.0036	-0.0152	-0.0056
61	SLU 118	-0.03944	0.00231	-0.00981	-0.0037	-0.0162	-0.0057
61	SLU 119	-0.04258	0.00235	-0.00924	-0.0037	-0.0176	-0.0057
61	SLU 120	-0.04258	0.00235	-0.00924	-0.0037	-0.0176	-0.0057
61	SLU 121	-0.04072	0.00235	-0.01002	-0.0037	-0.0165	-0.0058
61	SLU 122	-0.04072	0.00235	-0.01002	-0.0037	-0.0165	-0.0058
61	SLU 123	-0.04281	0.00237	-0.00963	-0.0038	-0.0175	-0.0058
61	SLU 124	-0.04281	0.00237	-0.00963	-0.0038	-0.0175	-0.0058
61	SLU 125	-0.03797	0.00232	-0.01074	-0.0038	-0.0152	-0.006
61	SLU 126	-0.03797	0.00233	-0.01074	-0.0038	-0.0152	-0.006
61	SLU 127	-0.04006	0.00235	-0.01036	-0.0038	-0.0161	-0.006
61	SLU 128	-0.04006	0.00235	-0.01036	-0.0038	-0.0161	-0.006
61	SLU 129	-0.04134	0.00238	-0.01056	-0.0039	-0.0165	-0.0061
61	SLU 130	-0.04134	0.00238	-0.01056	-0.0039	-0.0165	-0.0061
61	SLU 131	-0.04343	0.00241	-0.01018	-0.0039	-0.0175	-0.0061
61	SLU 132	-0.04343	0.00241	-0.01018	-0.0039	-0.0175	-0.0061
61	SLE RA 1	-0.0241	0.00167	-0.00778	-0.0026	-0.01	-0.004
61	SLE RA 2	-0.0241	0.00167	-0.00778	-0.0026	-0.01	-0.004
61	SLE RA 3	-0.02549	0.00168	-0.00753	-0.0026	-0.0107	-0.004
61	SLE RA 4	-0.02758	0.00171	-0.00715	-0.0026	-0.0116	-0.004
61	SLE RA 5	-0.02758	0.00171	-0.00715	-0.0026	-0.0116	-0.004
61	SLE RA 6	-0.02634	0.00171	-0.00767	-0.0027	-0.0109	-0.0041
61	SLE RA 7	-0.02774	0.00172	-0.00741	-0.0027	-0.0115	-0.0041
61	SLE RA 8	-0.02983	0.00174	-0.00703	-0.0027	-0.0125	-0.0041
61	SLE RA 9	-0.02983	0.00174	-0.00703	-0.0027	-0.0125	-0.0041

Nodo	Cont.	Spostamento			Rotazione		
Ind.	N.br.	ux	uy	uz	rx	ry	rz
61	SLE RA 10	-0.02859	0.00174	-0.00755	-0.0027	-0.0118	-0.0041
61	SLE RA 11	-0.02859	0.00174	-0.00755	-0.0027	-0.0118	-0.0042
61	SLE RA 12	-0.02998	0.00176	-0.00729	-0.0027	-0.0124	-0.0042
61	SLE RA 13	-0.02998	0.00176	-0.00729	-0.0027	-0.0124	-0.0042
61	SLE RA 14	-0.02587	0.00171	-0.00795	-0.0027	-0.0106	-0.0042
61	SLE RA 15	-0.02727	0.00172	-0.00769	-0.0027	-0.0112	-0.0042
61	SLE RA 16	-0.02935	0.00175	-0.00731	-0.0028	-0.0122	-0.0042
61	SLE RA 17	-0.02935	0.00175	-0.00731	-0.0028	-0.0122	-0.0043
61	SLE RA 18	-0.02812	0.00175	-0.00783	-0.0028	-0.0115	-0.0043
61	SLE RA 19	-0.02951	0.00176	-0.00758	-0.0028	-0.0121	-0.0043
61	SLE RA 20	-0.0316	0.00179	-0.00719	-0.0028	-0.0131	-0.0043
61	SLE RA 21	-0.0316	0.00179	-0.00719	-0.0028	-0.0131	-0.0043
61	SLE RA 22	-0.03036	0.00179	-0.00771	-0.0028	-0.0124	-0.0044
61	SLE RA 23	-0.03036	0.00179	-0.00771	-0.0028	-0.0124	-0.0044
61	SLE RA 24	-0.03175	0.0018	-0.00746	-0.0028	-0.013	-0.0044
61	SLE RA 25	-0.03175	0.0018	-0.00746	-0.0028	-0.013	-0.0044
61	SLE RA 26	-0.02853	0.00177	-0.0082	-0.0029	-0.0115	-0.0045
61	SLE RA 27	-0.02853	0.00177	-0.0082	-0.0029	-0.0115	-0.0045
61	SLE RA 28	-0.02992	0.00179	-0.00794	-0.0029	-0.0121	-0.0045
61	SLE RA 29	-0.02992	0.00179	-0.00794	-0.0029	-0.0121	-0.0045
61	SLE RA 30	-0.03077	0.00181	-0.00808	-0.0029	-0.0124	-0.0046
61	SLE RA 31	-0.03077	0.00181	-0.00808	-0.0029	-0.0124	-0.0046
61	SLE RA 32	-0.03217	0.00183	-0.00782	-0.003	-0.013	-0.0046
61	SLE RA 33	-0.03217	0.00183	-0.00782	-0.003	-0.013	-0.0046
61	SLE FR 1	-0.0241	0.00167	-0.00778	-0.0026	-0.01	-0.004
61	SLE FR 2	-0.0241	0.00167	-0.00778	-0.0026	-0.01	-0.004
61	SLE FR 3	-0.02549	0.00168	-0.00753	-0.0026	-0.0107	-0.004
61	SLE FR 4	-0.025	0.00168	-0.00774	-0.0026	-0.0104	-0.004
61	SLE FR 5	-0.02587	0.00171	-0.00795	-0.0027	-0.0106	-0.0042
61	SLE QP 1	-0.0241	0.00167	-0.00778	-0.0026	-0.01	-0.004
61	SLO 1	-0.11755	0.00149	0.03202	-0.1122	-0.0601	-0.2664
61	SLO 2	-0.11755	0.00149	0.03202	-0.1122	-0.0601	-0.2664
61	SLO 3	-0.11755	0.00183	0.03202	0.1071	-0.0601	0.2585
61	SLO 4	-0.11755	0.00183	0.03202	0.1071	-0.0601	0.2585
61	SLO 5	-0.05214	0.0011	0.00416	-0.3681	-0.025	-0.8789
61	SLO 6	-0.05214	0.0011	0.00416	-0.3681	-0.025	-0.8789
61	SLO 7	-0.05214	0.00223	0.00416	0.3629	-0.025	0.871
61	SLO 8	-0.05214	0.00223	0.00416	0.3629	-0.025	0.871
61	SLO 9	0.00393	0.0011	-0.01972	-0.3681	0.005	-0.8789
61	SLO 10	0.00393	0.0011	-0.01972	-0.3681	0.005	-0.8789
61	SLO 11	0.00393	0.00223	-0.01972	0.3629	0.005	0.8709
61	SLO 12	0.00393	0.00223	-0.01972	0.3629	0.005	0.8709
61	SLO 13	0.06935	0.0015	-0.04758	-0.1123	0.0401	-0.2664
61	SLO 14	0.06935	0.0015	-0.04758	-0.1123	0.0401	-0.2664
61	SLO 15	0.06935	0.00184	-0.04758	0.1071	0.0401	0.2585
61	SLO 16	0.06935	0.00184	-0.04758	0.1071	0.0401	0.2585
61	SLD 1	-0.10078	0.0015	0.02487	-0.1039	-0.0511	-0.2465
61	SLD 2	-0.10078	0.0015	0.02487	-0.1039	-0.0511	-0.2465
61	SLD 3	-0.10078	0.00182	0.02487	0.0987	-0.0511	0.2386
61	SLD 4	-0.10078	0.00182	0.02487	0.0987	-0.0511	0.2386
61	SLD 5	-0.04711	0.00114	0.00201	-0.3403	-0.0223	-0.8124
61	SLD 6	-0.04711	0.00114	0.00201	-0.3403	-0.0223	-0.8124
61	SLD 7	-0.04711	0.00218	0.00201	0.3352	-0.0223	0.8044
61	SLD 8	-0.04711	0.00218	0.00201	0.3352	-0.0223	0.8044
61	SLD 9	-0.0011	0.00115	-0.01758	-0.3403	0.0023	-0.8124
61	SLD 10	-0.0011	0.00115	-0.01758	-0.3403	0.0023	-0.8124
61	SLD 11	-0.0011	0.00219	-0.01758	0.3352	0.0023	0.8044
61	SLD 12	-0.0011	0.00219	-0.01758	0.3352	0.0023	0.8044
61	SLD 13	0.05258	0.00152	-0.04044	-0.1039	0.0311	-0.2465
61	SLD 14	0.05258	0.00152	-0.04044	-0.1039	0.0311	-0.2465
61	SLD 15	0.05258	0.00183	-0.04044	0.0987	0.0311	0.2386
61	SLD 16	0.05258	0.00183	-0.04044	0.0987	0.0311	0.2386
61	SLV 1	-0.19541	0.00124	0.06517	-0.2698	-0.1018	-0.6436
61	SLV 2	-0.19541	0.00124	0.06517	-0.2698	-0.1018	-0.6436
61	SLV 3	-0.19541	0.00206	0.06517	0.2647	-0.1018	0.6357
61	SLV 4	-0.19541	0.00206	0.06517	0.2647	-0.1018	0.6357
61	SLV 5	-0.07549	0.00029	0.0141	-0.8934	-0.0376	-2.1361
61	SLV 6	-0.07549	0.00029	0.0141	-0.8934	-0.0376	-2.1361
61	SLV 7	-0.07549	0.00304	0.0141	0.8882	-0.0376	2.1282
61	SLV 8	-0.07549	0.00304	0.0141	0.8882	-0.0376	2.1282
61	SLV 9	0.02729	0.0003	-0.02967	-0.8934	0.0175	-2.1361
61	SLV 10	0.02729	0.0003	-0.02967	-0.8934	0.0175	-2.1361
61	SLV 11	0.02729	0.00304	-0.02967	0.8882	0.0175	2.1282
61	SLV 12	0.02729	0.00304	-0.02967	0.8882	0.0175	2.1282
61	SLV 13	0.1472	0.00127	-0.08074	-0.2699	0.0818	-0.6436
61	SLV 14	0.1472	0.00127	-0.08074	-0.2699	0.0818	-0.6436
61	SLV 15	0.1472	0.00209	-0.08074	0.2646	0.0818	0.6357
61	SLV 16	0.1472	0.00209	-0.08074	0.2646	0.0818	0.6357
62	SLU 1	-0.01305	0.00162	0.02726	-0.0009	-0.0091	0
62	SLU 2	-0.01305	0.00162	0.02726	-0.0009	-0.0091	0
62	SLU 3	-0.01434	0.00165	0.03057	-0.0009	-0.0099	0
62	SLU 4	-0.01628	0.00168	0.03554	-0.0009	-0.0112	0
62	SLU 5	-0.01628	0.00168	0.03554	-0.0009	-0.0112	0
62	SLU 6	-0.01498	0.00168	0.03194	-0.0009	-0.0104	0
62	SLU 7	-0.01627	0.00171	0.03525	-0.0009	-0.0112	0
62	SLU 8	-0.01821	0.00174	0.04022	-0.0009	-0.0125	0
62	SLU 9	-0.01821	0.00174	0.04022	-0.0009	-0.0125	0
62	SLU 10	-0.01691	0.00174	0.03662	-0.001	-0.0117	0
62	SLU 11	-0.01691	0.00174	0.03662	-0.001	-0.0117	0
62	SLU 12	-0.01821	0.00176	0.03993	-0.001	-0.0126	0
62	SLU 13	-0.01821	0.00176	0.03993	-0.001	-0.0126	0
62	SLU 14	-0.01445	0.00168	0.03038	-0.0009	-0.0101	0
62	SLU 15	-0.01574	0.00171	0.03369	-0.0009	-0.011	0
62	SLU 16	-0.01768	0.00174	0.03866	-0.0009	-0.0122	0
62	SLU 17	-0.01768	0.00174	0.03866	-0.001	-0.0122	0

Nodo	Cont.	Spostamento			Rotazione		
Ind.	N.br.	ux	uy	uz	rx	ry	rz
62	SLU 18	-0.01638	0.00174	0.03506	-0.001	-0.0114	0
62	SLU 19	-0.01767	0.00177	0.03837	-0.001	-0.0123	0
62	SLU 20	-0.01961	0.0018	0.04334	-0.001	-0.0135	0
62	SLU 21	-0.01961	0.0018	0.04334	-0.001	-0.0135	0
62	SLU 22	-0.01831	0.0018	0.03974	-0.001	-0.0128	0
62	SLU 23	-0.01831	0.0018	0.03974	-0.001	-0.0128	0
62	SLU 24	-0.0196	0.00182	0.04305	-0.001	-0.0136	0
62	SLU 25	-0.0196	0.00182	0.04305	-0.001	-0.0136	0
62	SLU 26	-0.01654	0.00178	0.03506	-0.001	-0.0117	0
62	SLU 27	-0.01654	0.00178	0.03506	-0.001	-0.0117	0
62	SLU 28	-0.01783	0.0018	0.03837	-0.001	-0.0125	0
62	SLU 29	-0.01783	0.0018	0.03837	-0.001	-0.0125	0
62	SLU 30	-0.01847	0.00183	0.03974	-0.001	-0.013	0
62	SLU 31	-0.01847	0.00183	0.03974	-0.001	-0.013	0
62	SLU 32	-0.01976	0.00186	0.04305	-0.001	-0.0138	0
62	SLU 33	-0.01976	0.00186	0.04305	-0.001	-0.0138	0
62	SLU 34	-0.01305	0.00162	0.02726	-0.0009	-0.0091	0
62	SLU 35	-0.01305	0.00162	0.02726	-0.0009	-0.0091	0
62	SLU 36	-0.01434	0.00165	0.03057	-0.0009	-0.0099	0
62	SLU 37	-0.01628	0.00168	0.03554	-0.0009	-0.0112	0
62	SLU 38	-0.01628	0.00168	0.03554	-0.0009	-0.0112	0
62	SLU 39	-0.01498	0.00168	0.03194	-0.0009	-0.0104	0
62	SLU 40	-0.01627	0.00171	0.03525	-0.0009	-0.0112	0
62	SLU 41	-0.01821	0.00174	0.04022	-0.0009	-0.0125	0
62	SLU 42	-0.01821	0.00174	0.04022	-0.0009	-0.0125	0
62	SLU 43	-0.01691	0.00174	0.03662	-0.001	-0.0117	0
62	SLU 44	-0.01691	0.00174	0.03662	-0.001	-0.0117	0
62	SLU 45	-0.01821	0.00176	0.03993	-0.001	-0.0126	0
62	SLU 46	-0.01821	0.00176	0.03993	-0.001	-0.0126	0
62	SLU 47	-0.01445	0.00168	0.03038	-0.0009	-0.0101	0
62	SLU 48	-0.01574	0.00171	0.03369	-0.0009	-0.011	0
62	SLU 49	-0.01768	0.00174	0.03866	-0.0009	-0.0122	0
62	SLU 50	-0.01768	0.00174	0.03866	-0.001	-0.0122	0
62	SLU 51	-0.01638	0.00174	0.03506	-0.001	-0.0114	0
62	SLU 52	-0.01767	0.00177	0.03837	-0.001	-0.0123	0
62	SLU 53	-0.01961	0.0018	0.04334	-0.001	-0.0135	0
62	SLU 54	-0.01961	0.0018	0.04334	-0.001	-0.0135	0
62	SLU 55	-0.01831	0.0018	0.03974	-0.001	-0.0128	0
62	SLU 56	-0.01831	0.0018	0.03974	-0.001	-0.0128	0
62	SLU 57	-0.0196	0.00182	0.04305	-0.001	-0.0136	0
62	SLU 58	-0.0196	0.00182	0.04305	-0.001	-0.0136	0
62	SLU 59	-0.01654	0.00178	0.03506	-0.001	-0.0117	0
62	SLU 60	-0.01654	0.00178	0.03506	-0.001	-0.0117	0
62	SLU 61	-0.01783	0.0018	0.03837	-0.001	-0.0125	0
62	SLU 62	-0.01783	0.0018	0.03837	-0.001	-0.0125	0
62	SLU 63	-0.01847	0.00183	0.03974	-0.001	-0.013	0
62	SLU 64	-0.01847	0.00183	0.03974	-0.001	-0.013	0
62	SLU 65	-0.01976	0.00186	0.04305	-0.001	-0.0138	0
62	SLU 66	-0.01976	0.00186	0.04305	-0.001	-0.0138	0
62	SLU 67	-0.01697	0.00211	0.03544	-0.0012	-0.0118	0
62	SLU 68	-0.01697	0.00211	0.03544	-0.0012	-0.0118	0
62	SLU 69	-0.01826	0.00214	0.03875	-0.0012	-0.0126	0
62	SLU 70	-0.0202	0.00217	0.04372	-0.0012	-0.0139	0
62	SLU 71	-0.0202	0.00217	0.04372	-0.0012	-0.0139	0
62	SLU 72	-0.0189	0.00217	0.04012	-0.0012	-0.0131	0
62	SLU 73	-0.02019	0.00219	0.04343	-0.0012	-0.014	0
62	SLU 74	-0.02213	0.00223	0.0484	-0.0012	-0.0152	0
62	SLU 75	-0.02213	0.00223	0.0484	-0.0012	-0.0152	0
62	SLU 76	-0.02083	0.00223	0.0448	-0.0012	-0.0145	0
62	SLU 77	-0.02083	0.00223	0.0448	-0.0012	-0.0145	0
62	SLU 78	-0.02212	0.00225	0.04811	-0.0012	-0.0153	0
62	SLU 79	-0.02212	0.00225	0.04811	-0.0012	-0.0153	0
62	SLU 80	-0.01836	0.00217	0.03856	-0.0012	-0.0128	0
62	SLU 81	-0.01965	0.0022	0.04187	-0.0012	-0.0137	0
62	SLU 82	-0.02159	0.00223	0.04684	-0.0012	-0.0149	0
62	SLU 83	-0.02159	0.00223	0.04684	-0.0012	-0.0149	0
62	SLU 84	-0.02029	0.00223	0.04324	-0.0012	-0.0142	0
62	SLU 85	-0.02158	0.00225	0.04655	-0.0012	-0.015	0
62	SLU 86	-0.02352	0.00229	0.05152	-0.0012	-0.0163	0
62	SLU 87	-0.02352	0.00229	0.05152	-0.0012	-0.0163	0
62	SLU 88	-0.02222	0.00229	0.04792	-0.0013	-0.0155	0
62	SLU 89	-0.02222	0.00229	0.04792	-0.0013	-0.0155	0
62	SLU 90	-0.02352	0.00231	0.05123	-0.0013	-0.0163	0
62	SLU 91	-0.02352	0.00231	0.05123	-0.0013	-0.0163	0
62	SLU 92	-0.02045	0.00226	0.04324	-0.0013	-0.0144	0
62	SLU 93	-0.02045	0.00226	0.04324	-0.0013	-0.0144	0
62	SLU 94	-0.02174	0.00229	0.04655	-0.0013	-0.0152	0
62	SLU 95	-0.02174	0.00229	0.04655	-0.0013	-0.0152	0
62	SLU 96	-0.02238	0.00232	0.04792	-0.0013	-0.0157	0
62	SLU 97	-0.02238	0.00232	0.04792	-0.0013	-0.0157	0
62	SLU 98	-0.02368	0.00234	0.05123	-0.0013	-0.0166	0
62	SLU 99	-0.02368	0.00234	0.05123	-0.0013	-0.0166	0
62	SLU 100	-0.01697	0.00211	0.03544	-0.0012	-0.0118	0
62	SLU 101	-0.01697	0.00211	0.03544	-0.0012	-0.0118	0
62	SLU 102	-0.01826	0.00214	0.03875	-0.0012	-0.0126	0
62	SLU 103	-0.0202	0.00217	0.04372	-0.0012	-0.0139	0
62	SLU 104	-0.0202	0.00217	0.04372	-0.0012	-0.0139	0
62	SLU 105	-0.0189	0.00217	0.04012	-0.0012	-0.0131	0
62	SLU 106	-0.02019	0.00219	0.04343	-0.0012	-0.014	0
62	SLU 107	-0.02213	0.00223	0.0484	-0.0012	-0.0152	0
62	SLU 108	-0.02213	0.00223	0.0484	-0.0012	-0.0152	0
62	SLU 109	-0.02083	0.00223	0.0448	-0.0012	-0.0145	0
62	SLU 110	-0.02083	0.00223	0.0448	-0.0012	-0.0145	0
62	SLU 111	-0.02212	0.00225	0.04811	-0.0012	-0.0153	0
62	SLU 112	-0.02212	0.00225	0.04811	-0.0012	-0.0153	0

Nodo	Cont.	Spostamento			Rotazione		
Ind.	N.br.	ux	uy	uz	rx	ry	rz
62	SLU 113	-0.01836	0.00217	0.03856	-0.0012	-0.0128	0
62	SLU 114	-0.01965	0.0022	0.04187	-0.0012	-0.0137	0
62	SLU 115	-0.02159	0.00223	0.04684	-0.0012	-0.0149	0
62	SLU 116	-0.02159	0.00223	0.04684	-0.0012	-0.0149	0
62	SLU 117	-0.02029	0.00223	0.04324	-0.0012	-0.0142	0
62	SLU 118	-0.02158	0.00225	0.04655	-0.0012	-0.015	0
62	SLU 119	-0.02352	0.00229	0.05152	-0.0012	-0.0163	0
62	SLU 120	-0.02352	0.00229	0.05152	-0.0012	-0.0163	0
62	SLU 121	-0.02222	0.00229	0.04792	-0.0013	-0.0155	0
62	SLU 122	-0.02222	0.00229	0.04792	-0.0013	-0.0155	0
62	SLU 123	-0.02352	0.00231	0.05123	-0.0013	-0.0163	0
62	SLU 124	-0.02352	0.00231	0.05123	-0.0013	-0.0163	0
62	SLU 125	-0.02045	0.00226	0.04324	-0.0013	-0.0144	0
62	SLU 126	-0.02045	0.00226	0.04324	-0.0013	-0.0144	0
62	SLU 127	-0.02174	0.00229	0.04655	-0.0013	-0.0152	0
62	SLU 128	-0.02174	0.00229	0.04655	-0.0013	-0.0152	0
62	SLU 129	-0.02238	0.00232	0.04792	-0.0013	-0.0157	0
62	SLU 130	-0.02238	0.00232	0.04792	-0.0013	-0.0157	0
62	SLU 131	-0.02368	0.00234	0.05123	-0.0013	-0.0166	0
62	SLU 132	-0.02368	0.00234	0.05123	-0.0013	-0.0166	0
62	SLE RA 1	-0.01305	0.00162	0.02726	-0.0009	-0.0091	0
62	SLE RA 2	-0.01305	0.00162	0.02726	-0.0009	-0.0091	0
62	SLE RA 3	-0.01391	0.00164	0.02947	-0.0009	-0.0096	0
62	SLE RA 4	-0.0152	0.00166	0.03278	-0.0009	-0.0105	0
62	SLE RA 5	-0.0152	0.00166	0.03278	-0.0009	-0.0105	0
62	SLE RA 6	-0.01434	0.00166	0.03038	-0.0009	-0.01	0
62	SLE RA 7	-0.0152	0.00168	0.03259	-0.0009	-0.0105	0
62	SLE RA 8	-0.01649	0.0017	0.0359	-0.0009	-0.0114	0
62	SLE RA 9	-0.01649	0.0017	0.0359	-0.0009	-0.0114	0
62	SLE RA 10	-0.01563	0.0017	0.0335	-0.0009	-0.0109	0
62	SLE RA 11	-0.01563	0.0017	0.0335	-0.0009	-0.0109	0
62	SLE RA 12	-0.01649	0.00172	0.03571	-0.0009	-0.0114	0
62	SLE RA 13	-0.01649	0.00172	0.03571	-0.0009	-0.0114	0
62	SLE RA 14	-0.01398	0.00166	0.02934	-0.0009	-0.0098	0
62	SLE RA 15	-0.01484	0.00168	0.03155	-0.0009	-0.0103	0
62	SLE RA 16	-0.01613	0.0017	0.03486	-0.0009	-0.0112	0
62	SLE RA 17	-0.01613	0.0017	0.03486	-0.0009	-0.0112	0
62	SLE RA 18	-0.01527	0.0017	0.03246	-0.0009	-0.0107	0
62	SLE RA 19	-0.01613	0.00172	0.03467	-0.001	-0.0112	0
62	SLE RA 20	-0.01742	0.00174	0.03798	-0.001	-0.0121	0
62	SLE RA 21	-0.01742	0.00174	0.03798	-0.001	-0.0121	0
62	SLE RA 22	-0.01656	0.00174	0.03558	-0.001	-0.0115	0
62	SLE RA 23	-0.01656	0.00174	0.03558	-0.001	-0.0115	0
62	SLE RA 24	-0.01742	0.00176	0.03779	-0.001	-0.0121	0
62	SLE RA 25	-0.01742	0.00176	0.03779	-0.001	-0.0121	0
62	SLE RA 26	-0.01538	0.00173	0.03246	-0.001	-0.0108	0
62	SLE RA 27	-0.01538	0.00173	0.03246	-0.001	-0.0108	0
62	SLE RA 28	-0.01624	0.00174	0.03467	-0.001	-0.0114	0
62	SLE RA 29	-0.01624	0.00174	0.03467	-0.001	-0.0114	0
62	SLE RA 30	-0.01666	0.00176	0.03558	-0.001	-0.0117	0
62	SLE RA 31	-0.01666	0.00176	0.03558	-0.001	-0.0117	0
62	SLE RA 32	-0.01752	0.00178	0.03779	-0.001	-0.0123	0
62	SLE RA 33	-0.01752	0.00178	0.03779	-0.001	-0.0123	0
62	SLE FR 1	-0.01305	0.00162	0.02726	-0.0009	-0.0091	0
62	SLE FR 2	-0.01305	0.00162	0.02726	-0.0009	-0.0091	0
62	SLE FR 3	-0.01391	0.00164	0.02947	-0.0009	-0.0096	0
62	SLE FR 4	-0.01357	0.00164	0.02851	-0.0009	-0.0094	0
62	SLE FR 5	-0.01398	0.00166	0.02934	-0.0009	-0.0098	0
62	SLE QP 1	-0.01305	0.00162	0.02726	-0.0009	-0.0091	0
62	SLO 1	-0.10388	-0.00212	0.19041	-0.0334	-0.0019	-0.0013
62	SLO 2	-0.10388	-0.00212	0.19041	-0.0334	-0.0019	-0.0013
62	SLO 3	-0.10388	0.00535	0.19041	0.0316	-0.0019	0.0012
62	SLO 4	-0.10388	0.00535	0.19041	0.0316	-0.0019	0.0012
62	SLO 5	-0.0403	-0.01083	0.0762	-0.1093	-0.0069	-0.0041
62	SLO 6	-0.0403	-0.01083	0.0762	-0.1093	-0.0069	-0.0041
62	SLO 7	-0.0403	0.01407	0.0762	0.1075	-0.0069	0.0041
62	SLO 8	-0.0403	0.01407	0.0762	0.1075	-0.0069	0.0041
62	SLO 9	0.0142	-0.01083	-0.02168	-0.1094	-0.0112	-0.0041
62	SLO 10	0.0142	-0.01083	-0.02168	-0.1094	-0.0112	-0.0041
62	SLO 11	0.0142	0.01408	-0.02168	0.1075	-0.0112	0.0041
62	SLO 12	0.0142	0.01408	-0.02168	0.1075	-0.0112	0.0041
62	SLO 13	0.07778	-0.00211	-0.13589	-0.0335	-0.0162	-0.0013
62	SLO 14	0.07778	-0.00211	-0.13589	-0.0335	-0.0162	-0.0013
62	SLO 15	0.07778	0.00536	-0.13589	0.0316	-0.0162	0.0012
62	SLO 16	0.07778	0.00536	-0.13589	0.0316	-0.0162	0.0012
62	SLD 1	-0.08758	-0.00183	0.16113	-0.031	-0.0032	-0.0012
62	SLD 2	-0.08758	-0.00183	0.16113	-0.031	-0.0032	-0.0012
62	SLD 3	-0.08758	0.00507	0.16113	0.0291	-0.0032	0.0011
62	SLD 4	-0.08758	0.00507	0.16113	0.0291	-0.0032	0.0011
62	SLD 5	-0.03541	-0.00988	0.06742	-0.1011	-0.0073	-0.0038
62	SLD 6	-0.03541	-0.00988	0.06742	-0.1011	-0.0073	-0.0038
62	SLD 7	-0.03541	0.01313	0.06742	0.0993	-0.0073	0.0038
62	SLD 8	-0.03541	0.01313	0.06742	0.0993	-0.0073	0.0038
62	SLD 9	0.00931	-0.00988	-0.0129	-0.1011	-0.0108	-0.0038
62	SLD 10	0.00931	-0.00988	-0.0129	-0.1011	-0.0108	-0.0038
62	SLD 11	0.00931	0.01313	-0.0129	0.0993	-0.0108	0.0038
62	SLD 12	0.00931	0.01313	-0.0129	0.0993	-0.0108	0.0038
62	SLD 13	0.06148	-0.00182	-0.10661	-0.031	-0.0149	-0.0012
62	SLD 14	0.06148	-0.00182	-0.10661	-0.031	-0.0149	-0.0012
62	SLD 15	0.06148	0.00508	-0.10661	0.0291	-0.0149	0.0011
62	SLD 16	0.06148	0.00508	-0.10661	0.0291	-0.0149	0.0011
62	SLV 1	-0.17955	-0.00749	0.32632	-0.0802	0.004	-0.003
62	SLV 2	-0.17955	-0.00749	0.32632	-0.0802	0.004	-0.003
62	SLV 3	-0.17955	0.01072	0.32632	0.0784	0.004	0.003
62	SLV 4	-0.17955	0.01072	0.32632	0.0784	0.004	0.003

Nodo	Cont.	Spostamento			Rotazione		
Ind.	N.br.	ux	uy	uz	rx	ry	rz
62	SLV 5	-0.063	-0.02872	0.11698	-0.2652	-0.0052	-0.0101
62	SLV 6	-0.063	-0.02872	0.11698	-0.2652	-0.0052	-0.0101
62	SLV 7	-0.063	0.03197	0.11698	0.2633	-0.0052	0.01
62	SLV 8	-0.063	0.03197	0.11698	0.2633	-0.0052	0.01
62	SLV 9	0.0369	-0.02872	-0.06246	-0.2652	-0.013	-0.0101
62	SLV 10	0.0369	-0.02872	-0.06246	-0.2652	-0.013	-0.0101
62	SLV 11	0.0369	0.03197	-0.06246	0.2633	-0.013	0.01
62	SLV 12	0.0369	0.03197	-0.06246	0.2633	-0.013	0.01
62	SLV 13	0.15345	-0.00747	-0.2718	-0.0802	-0.0222	-0.003
62	SLV 14	0.15345	-0.00747	-0.2718	-0.0802	-0.0222	-0.003
62	SLV 15	0.15345	0.01074	-0.2718	0.0783	-0.0222	0.003
62	SLV 16	0.15345	0.01074	-0.2718	0.0783	-0.0222	0.003
63	SLU 1	0.01305	0.00162	0.02726	-0.0009	0.0091	0
63	SLU 2	0.01305	0.00162	0.02726	-0.0009	0.0091	0
63	SLU 3	0.01434	0.00165	0.03057	-0.0009	0.0099	0
63	SLU 4	0.01628	0.00168	0.03554	-0.0009	0.0112	0
63	SLU 5	0.01628	0.00168	0.03554	-0.0009	0.0112	0
63	SLU 6	0.01516	0.00168	0.03226	-0.0009	0.0104	0
63	SLU 7	0.01645	0.0017	0.03557	-0.0009	0.0112	0
63	SLU 8	0.01839	0.00174	0.04054	-0.0009	0.0125	0
63	SLU 9	0.01839	0.00174	0.04054	-0.0009	0.0125	0
63	SLU 10	0.01726	0.00174	0.03727	-0.001	0.0117	0
63	SLU 11	0.01726	0.00174	0.03727	-0.001	0.0117	0
63	SLU 12	0.01855	0.00176	0.04058	-0.001	0.0126	0
63	SLU 13	0.01855	0.00176	0.04058	-0.001	0.0126	0
63	SLU 14	0.01474	0.00168	0.03092	-0.0009	0.0101	0
63	SLU 15	0.01603	0.00171	0.03423	-0.0009	0.0109	0
63	SLU 16	0.01797	0.00174	0.0392	-0.0009	0.0122	0
63	SLU 17	0.01797	0.00174	0.0392	-0.0009	0.0122	0
63	SLU 18	0.01684	0.00174	0.03593	-0.001	0.0114	0
63	SLU 19	0.01813	0.00176	0.03924	-0.001	0.0122	0
63	SLU 20	0.02007	0.0018	0.0442	-0.001	0.0135	0
63	SLU 21	0.02007	0.0018	0.0442	-0.001	0.0135	0
63	SLU 22	0.01895	0.0018	0.04093	-0.001	0.0127	0
63	SLU 23	0.01895	0.0018	0.04093	-0.001	0.0127	0
63	SLU 24	0.02024	0.00182	0.04424	-0.001	0.0136	0
63	SLU 25	0.02024	0.00182	0.04424	-0.001	0.0136	0
63	SLU 26	0.01726	0.00177	0.03641	-0.001	0.0116	0
63	SLU 27	0.01726	0.00177	0.03641	-0.001	0.0116	0
63	SLU 28	0.01856	0.0018	0.03973	-0.001	0.0124	0
63	SLU 29	0.01856	0.0018	0.03973	-0.001	0.0124	0
63	SLU 30	0.01937	0.00183	0.04142	-0.001	0.0129	0
63	SLU 31	0.01937	0.00183	0.04142	-0.001	0.0129	0
63	SLU 32	0.02066	0.00185	0.04473	-0.001	0.0138	0
63	SLU 33	0.02066	0.00185	0.04473	-0.001	0.0138	0
63	SLU 34	0.01305	0.00162	0.02726	-0.0009	0.0091	0
63	SLU 35	0.01305	0.00162	0.02726	-0.0009	0.0091	0
63	SLU 36	0.01434	0.00165	0.03057	-0.0009	0.0099	0
63	SLU 37	0.01628	0.00168	0.03554	-0.0009	0.0112	0
63	SLU 38	0.01628	0.00168	0.03554	-0.0009	0.0112	0
63	SLU 39	0.01516	0.00168	0.03226	-0.0009	0.0104	0
63	SLU 40	0.01645	0.0017	0.03557	-0.0009	0.0112	0
63	SLU 41	0.01839	0.00174	0.04054	-0.0009	0.0125	0
63	SLU 42	0.01839	0.00174	0.04054	-0.0009	0.0125	0
63	SLU 43	0.01726	0.00174	0.03727	-0.001	0.0117	0
63	SLU 44	0.01726	0.00174	0.03727	-0.001	0.0117	0
63	SLU 45	0.01855	0.00176	0.04058	-0.001	0.0126	0
63	SLU 46	0.01855	0.00176	0.04058	-0.001	0.0126	0
63	SLU 47	0.01474	0.00168	0.03092	-0.0009	0.0101	0
63	SLU 48	0.01603	0.00171	0.03423	-0.0009	0.0109	0
63	SLU 49	0.01797	0.00174	0.0392	-0.0009	0.0122	0
63	SLU 50	0.01797	0.00174	0.0392	-0.0009	0.0122	0
63	SLU 51	0.01684	0.00174	0.03593	-0.001	0.0114	0
63	SLU 52	0.01813	0.00176	0.03924	-0.001	0.0122	0
63	SLU 53	0.02007	0.0018	0.0442	-0.001	0.0135	0
63	SLU 54	0.02007	0.0018	0.0442	-0.001	0.0135	0
63	SLU 55	0.01895	0.0018	0.04093	-0.001	0.0127	0
63	SLU 56	0.01895	0.0018	0.04093	-0.001	0.0127	0
63	SLU 57	0.02024	0.00182	0.04424	-0.001	0.0136	0
63	SLU 58	0.02024	0.00182	0.04424	-0.001	0.0136	0
63	SLU 59	0.01726	0.00177	0.03641	-0.001	0.0116	0
63	SLU 60	0.01726	0.00177	0.03641	-0.001	0.0116	0
63	SLU 61	0.01856	0.0018	0.03973	-0.001	0.0124	0
63	SLU 62	0.01856	0.0018	0.03973	-0.001	0.0124	0
63	SLU 63	0.01937	0.00183	0.04142	-0.001	0.0129	0
63	SLU 64	0.01937	0.00183	0.04142	-0.001	0.0129	0
63	SLU 65	0.02066	0.00185	0.04473	-0.001	0.0138	0
63	SLU 66	0.02066	0.00185	0.04473	-0.001	0.0138	0
63	SLU 67	0.01697	0.00211	0.03544	-0.0012	0.0118	0
63	SLU 68	0.01697	0.00211	0.03544	-0.0012	0.0118	0
63	SLU 69	0.01826	0.00214	0.03875	-0.0012	0.0126	0
63	SLU 70	0.0202	0.00217	0.04372	-0.0012	0.0139	0
63	SLU 71	0.0202	0.00217	0.04372	-0.0012	0.0139	0
63	SLU 72	0.01907	0.00217	0.04044	-0.0012	0.0131	0
63	SLU 73	0.02036	0.00219	0.04375	-0.0012	0.014	0
63	SLU 74	0.0223	0.00223	0.04872	-0.0012	0.0152	0
63	SLU 75	0.0223	0.00223	0.04872	-0.0012	0.0152	0
63	SLU 76	0.02118	0.00223	0.04544	-0.0012	0.0144	0
63	SLU 77	0.02118	0.00223	0.04544	-0.0012	0.0144	0
63	SLU 78	0.02247	0.00225	0.04876	-0.0012	0.0153	0
63	SLU 79	0.02247	0.00225	0.04876	-0.0012	0.0153	0
63	SLU 80	0.01865	0.00217	0.0391	-0.0012	0.0128	0
63	SLU 81	0.01994	0.0022	0.04241	-0.0012	0.0137	0
63	SLU 82	0.02188	0.00223	0.04738	-0.0012	0.0149	0
63	SLU 83	0.02188	0.00223	0.04738	-0.0012	0.0149	0

Nodo	Cont.	Spostamento			Rotazione		
Ind.	N.br.	ux	uy	uz	rx	ry	rz
63	SLU 84	0.02076	0.00223	0.0441	-0.0012	0.0141	0
63	SLU 85	0.02205	0.00225	0.04741	-0.0012	0.015	0
63	SLU 86	0.02399	0.00229	0.05238	-0.0012	0.0162	0
63	SLU 87	0.02399	0.00229	0.05238	-0.0012	0.0162	0
63	SLU 88	0.02286	0.00229	0.04911	-0.0012	0.0155	0
63	SLU 89	0.02286	0.00229	0.04911	-0.0012	0.0155	0
63	SLU 90	0.02416	0.00231	0.05242	-0.0013	0.0163	0
63	SLU 91	0.02416	0.00231	0.05242	-0.0013	0.0163	0
63	SLU 92	0.02118	0.00226	0.04459	-0.0012	0.0143	0
63	SLU 93	0.02118	0.00226	0.04459	-0.0012	0.0143	0
63	SLU 94	0.02247	0.00228	0.0479	-0.0013	0.0152	0
63	SLU 95	0.02247	0.00229	0.0479	-0.0013	0.0152	0
63	SLU 96	0.02329	0.00232	0.0496	-0.0013	0.0157	0
63	SLU 97	0.02329	0.00232	0.0496	-0.0013	0.0157	0
63	SLU 98	0.02458	0.00234	0.05291	-0.0013	0.0165	0
63	SLU 99	0.02458	0.00234	0.05291	-0.0013	0.0165	0
63	SLU 100	0.01697	0.00211	0.03544	-0.0012	0.0118	0
63	SLU 101	0.01697	0.00211	0.03544	-0.0012	0.0118	0
63	SLU 102	0.01826	0.00214	0.03875	-0.0012	0.0126	0
63	SLU 103	0.0202	0.00217	0.04372	-0.0012	0.0139	0
63	SLU 104	0.0202	0.00217	0.04372	-0.0012	0.0139	0
63	SLU 105	0.01907	0.00217	0.04044	-0.0012	0.0131	0
63	SLU 106	0.02036	0.00219	0.04375	-0.0012	0.014	0
63	SLU 107	0.0223	0.00223	0.04872	-0.0012	0.0152	0
63	SLU 108	0.0223	0.00223	0.04872	-0.0012	0.0152	0
63	SLU 109	0.02118	0.00223	0.04544	-0.0012	0.0144	0
63	SLU 110	0.02118	0.00223	0.04544	-0.0012	0.0144	0
63	SLU 111	0.02247	0.00225	0.04876	-0.0012	0.0153	0
63	SLU 112	0.02247	0.00225	0.04876	-0.0012	0.0153	0
63	SLU 113	0.01865	0.00217	0.0391	-0.0012	0.0128	0
63	SLU 114	0.01994	0.0022	0.04241	-0.0012	0.0137	0
63	SLU 115	0.02188	0.00223	0.04738	-0.0012	0.0149	0
63	SLU 116	0.02188	0.00223	0.04738	-0.0012	0.0149	0
63	SLU 117	0.02076	0.00223	0.0441	-0.0012	0.0141	0
63	SLU 118	0.02205	0.00225	0.04741	-0.0012	0.015	0
63	SLU 119	0.02399	0.00229	0.05238	-0.0012	0.0162	0
63	SLU 120	0.02399	0.00229	0.05238	-0.0012	0.0162	0
63	SLU 121	0.02286	0.00229	0.04911	-0.0012	0.0155	0
63	SLU 122	0.02286	0.00229	0.04911	-0.0012	0.0155	0
63	SLU 123	0.02416	0.00231	0.05242	-0.0013	0.0163	0
63	SLU 124	0.02416	0.00231	0.05242	-0.0013	0.0163	0
63	SLU 125	0.02118	0.00226	0.04459	-0.0012	0.0143	0
63	SLU 126	0.02118	0.00226	0.04459	-0.0012	0.0143	0
63	SLU 127	0.02247	0.00228	0.0479	-0.0013	0.0152	0
63	SLU 128	0.02247	0.00229	0.0479	-0.0013	0.0152	0
63	SLU 129	0.02329	0.00232	0.0496	-0.0013	0.0157	0
63	SLU 130	0.02329	0.00232	0.0496	-0.0013	0.0157	0
63	SLU 131	0.02458	0.00234	0.05291	-0.0013	0.0165	0
63	SLU 132	0.02458	0.00234	0.05291	-0.0013	0.0165	0
63	SLE RA 1	0.01305	0.00162	0.02726	-0.0009	0.0091	0
63	SLE RA 2	0.01305	0.00162	0.02726	-0.0009	0.0091	0
63	SLE RA 3	0.01391	0.00164	0.02947	-0.0009	0.0096	0
63	SLE RA 4	0.0152	0.00166	0.03278	-0.0009	0.0105	0
63	SLE RA 5	0.0152	0.00166	0.03278	-0.0009	0.0105	0
63	SLE RA 6	0.01445	0.00166	0.0306	-0.0009	0.01	0
63	SLE RA 7	0.01532	0.00168	0.0328	-0.0009	0.0105	0
63	SLE RA 8	0.01661	0.0017	0.03611	-0.0009	0.0114	0
63	SLE RA 9	0.01661	0.0017	0.03611	-0.0009	0.0114	0
63	SLE RA 10	0.01586	0.0017	0.03393	-0.0009	0.0108	0
63	SLE RA 11	0.01586	0.0017	0.03393	-0.0009	0.0108	0
63	SLE RA 12	0.01672	0.00172	0.03614	-0.0009	0.0114	0
63	SLE RA 13	0.01672	0.00172	0.03614	-0.0009	0.0114	0
63	SLE RA 14	0.01417	0.00166	0.0297	-0.0009	0.0098	0
63	SLE RA 15	0.01504	0.00168	0.03191	-0.0009	0.0103	0
63	SLE RA 16	0.01633	0.0017	0.03522	-0.0009	0.0112	0
63	SLE RA 17	0.01633	0.0017	0.03522	-0.0009	0.0112	0
63	SLE RA 18	0.01558	0.0017	0.03304	-0.0009	0.0106	0
63	SLE RA 19	0.01644	0.00172	0.03524	-0.0009	0.0112	0
63	SLE RA 20	0.01773	0.00174	0.03856	-0.0009	0.012	0
63	SLE RA 21	0.01773	0.00174	0.03856	-0.0009	0.012	0
63	SLE RA 22	0.01698	0.00174	0.03637	-0.001	0.0115	0
63	SLE RA 23	0.01698	0.00174	0.03637	-0.001	0.0115	0
63	SLE RA 24	0.01784	0.00176	0.03858	-0.001	0.0121	0
63	SLE RA 25	0.01784	0.00176	0.03858	-0.001	0.0121	0
63	SLE RA 26	0.01586	0.00172	0.03336	-0.001	0.0108	0
63	SLE RA 27	0.01586	0.00172	0.03336	-0.001	0.0108	0
63	SLE RA 28	0.01672	0.00174	0.03557	-0.001	0.0113	0
63	SLE RA 29	0.01672	0.00174	0.03557	-0.001	0.0113	0
63	SLE RA 30	0.01726	0.00176	0.0367	-0.001	0.0116	0
63	SLE RA 31	0.01726	0.00176	0.0367	-0.001	0.0116	0
63	SLE RA 32	0.01813	0.00178	0.03891	-0.001	0.0122	0
63	SLE RA 33	0.01813	0.00178	0.03891	-0.001	0.0122	0
63	SLE FR 1	0.01305	0.00162	0.02726	-0.0009	0.0091	0
63	SLE FR 2	0.01305	0.00162	0.02726	-0.0009	0.0091	0
63	SLE FR 3	0.01391	0.00164	0.02947	-0.0009	0.0096	0
63	SLE FR 4	0.01361	0.00164	0.02859	-0.0009	0.0094	0
63	SLE FR 5	0.01417	0.00166	0.0297	-0.0009	0.0098	0
63	SLE QP 1	0.01305	0.00162	0.02726	-0.0009	0.0091	0
63	SLO 1	-0.07778	-0.00211	-0.13589	-0.0335	0.0162	0.0013
63	SLO 2	-0.07778	-0.00211	-0.13589	-0.0335	0.0162	0.0013
63	SLO 3	-0.07778	0.00536	-0.13589	0.0316	0.0162	-0.0012
63	SLO 4	-0.07778	0.00536	-0.13589	0.0316	0.0162	-0.0012
63	SLO 5	-0.0142	-0.01083	-0.02168	-0.1094	0.0112	0.0041
63	SLO 6	-0.0142	-0.01083	-0.02168	-0.1094	0.0112	0.0041
63	SLO 7	-0.0142	0.01408	-0.02168	0.1075	0.0112	-0.0041

Nodo	Cont.	Spostamento			Rotazione		
Ind.	N.br.	ux	uy	uz	rx	ry	rz
63	SLO 8	-0.0142	0.01408	-0.02168	0.1075	0.0112	-0.0041
63	SLO 9	0.0403	-0.01083	0.0762	-0.1093	0.0069	0.0041
63	SLO 10	0.0403	-0.01083	0.0762	-0.1093	0.0069	0.0041
63	SLO 11	0.0403	0.01407	0.0762	0.1075	0.0069	-0.0041
63	SLO 12	0.0403	0.01407	0.0762	0.1075	0.0069	-0.0041
63	SLO 13	0.10388	-0.00212	0.19041	-0.0334	0.0019	0.0013
63	SLO 14	0.10388	-0.00212	0.19041	-0.0334	0.0019	0.0013
63	SLO 15	0.10388	0.00535	0.19041	0.0316	0.0019	-0.0012
63	SLO 16	0.10388	0.00535	0.19041	0.0316	0.0019	-0.0012
63	SLD 1	-0.06148	-0.00182	-0.10661	-0.031	0.0149	0.0012
63	SLD 2	-0.06148	-0.00182	-0.10661	-0.031	0.0149	0.0012
63	SLD 3	-0.06148	0.00508	-0.10661	0.0291	0.0149	-0.0011
63	SLD 4	-0.06148	0.00508	-0.10661	0.0291	0.0149	-0.0011
63	SLD 5	-0.00931	-0.00988	-0.0129	-0.1011	0.0108	0.0038
63	SLD 6	-0.00931	-0.00988	-0.0129	-0.1011	0.0108	0.0038
63	SLD 7	-0.00931	0.01313	-0.0129	0.0993	0.0108	-0.0038
63	SLD 8	-0.00931	0.01313	-0.0129	0.0993	0.0108	-0.0038
63	SLD 9	0.03541	-0.00988	0.06742	-0.1011	0.0073	0.0038
63	SLD 10	0.03541	-0.00988	0.06742	-0.1011	0.0073	0.0038
63	SLD 11	0.03541	0.01313	0.06742	0.0993	0.0073	-0.0038
63	SLD 12	0.03541	0.01313	0.06742	0.0993	0.0073	-0.0038
63	SLD 13	0.08758	-0.00183	0.16113	-0.031	0.0032	0.0012
63	SLD 14	0.08758	-0.00183	0.16113	-0.031	0.0032	0.0012
63	SLD 15	0.08758	0.00507	0.16113	0.0291	0.0032	-0.0011
63	SLD 16	0.08758	0.00507	0.16113	0.0291	0.0032	-0.0011
63	SLV 1	-0.15345	-0.00747	-0.2718	-0.0802	0.0222	0.003
63	SLV 2	-0.15345	-0.00747	-0.2718	-0.0802	0.0222	0.003
63	SLV 3	-0.15345	0.01074	-0.2718	0.0783	0.0222	-0.003
63	SLV 4	-0.15345	0.01074	-0.2718	0.0783	0.0222	-0.003
63	SLV 5	-0.0369	-0.02872	-0.06246	-0.2652	0.013	0.0101
63	SLV 6	-0.0369	-0.02872	-0.06246	-0.2652	0.013	0.0101
63	SLV 7	-0.0369	0.03197	-0.06246	0.2633	0.013	-0.01
63	SLV 8	-0.0369	0.03197	-0.06246	0.2633	0.013	-0.01
63	SLV 9	0.063	-0.02872	0.11698	-0.2652	0.0052	0.0101
63	SLV 10	0.063	-0.02872	0.11698	-0.2652	0.0052	0.0101
63	SLV 11	0.063	0.03197	0.11698	0.2633	0.0052	-0.01
63	SLV 12	0.063	0.03197	0.11698	0.2633	0.0052	-0.01
63	SLV 13	0.17955	-0.00749	0.32632	-0.0802	-0.004	0.003
63	SLV 14	0.17955	-0.00749	0.32632	-0.0802	-0.004	0.003
63	SLV 15	0.17955	0.01072	0.32632	0.0784	-0.004	-0.003
63	SLV 16	0.17955	0.01072	0.32632	0.0784	-0.004	-0.003
64	SLU 1	0.0241	0.00167	-0.00778	-0.0026	0.01	0.004
64	SLU 2	0.0241	0.00167	-0.00778	-0.0026	0.01	0.004
64	SLU 3	0.02619	0.00169	-0.0074	-0.0026	0.011	0.004
64	SLU 4	0.02932	0.00172	-0.00683	-0.0027	0.0124	0.0041
64	SLU 5	0.02932	0.00173	-0.00683	-0.0027	0.0124	0.0041
64	SLU 6	0.02764	0.00172	-0.00753	-0.0027	0.0114	0.0041
64	SLU 7	0.02973	0.00175	-0.00715	-0.0027	0.0124	0.0042
64	SLU 8	0.03286	0.00178	-0.00658	-0.0028	0.0138	0.0042
64	SLU 9	0.03286	0.00178	-0.00658	-0.0028	0.0138	0.0042
64	SLU 10	0.03118	0.00178	-0.00728	-0.0028	0.0129	0.0042
64	SLU 11	0.03118	0.00178	-0.00728	-0.0028	0.0129	0.0042
64	SLU 12	0.03326	0.00181	-0.0069	-0.0028	0.0138	0.0043
64	SLU 13	0.03326	0.00181	-0.0069	-0.0028	0.0138	0.0043
64	SLU 14	0.02705	0.00173	-0.0079	-0.0028	0.0111	0.0043
64	SLU 15	0.02914	0.00175	-0.00752	-0.0028	0.012	0.0043
64	SLU 16	0.03227	0.00179	-0.00695	-0.0028	0.0134	0.0044
64	SLU 17	0.03227	0.00179	-0.00695	-0.0028	0.0134	0.0044
64	SLU 18	0.03058	0.00179	-0.00765	-0.0029	0.0125	0.0044
64	SLU 19	0.03267	0.00181	-0.00727	-0.0029	0.0134	0.0045
64	SLU 20	0.03581	0.00185	-0.0067	-0.0029	0.0149	0.0045
64	SLU 21	0.03581	0.00185	-0.0067	-0.0029	0.0149	0.0045
64	SLU 22	0.03412	0.00184	-0.0074	-0.0029	0.0139	0.0046
64	SLU 23	0.03412	0.00184	-0.0074	-0.0029	0.0139	0.0046
64	SLU 24	0.03621	0.00187	-0.00702	-0.003	0.0149	0.0046
64	SLU 25	0.03621	0.00187	-0.00702	-0.003	0.0149	0.0046
64	SLU 26	0.03146	0.00182	-0.00808	-0.003	0.0126	0.0048
64	SLU 27	0.03146	0.00182	-0.00808	-0.003	0.0126	0.0048
64	SLU 28	0.03355	0.00185	-0.0077	-0.003	0.0136	0.0048
64	SLU 29	0.03355	0.00185	-0.0077	-0.003	0.0136	0.0048
64	SLU 30	0.035	0.00188	-0.00783	-0.0031	0.014	0.0049
64	SLU 31	0.035	0.00188	-0.00783	-0.0031	0.014	0.0049
64	SLU 32	0.03709	0.0019	-0.00745	-0.0031	0.015	0.0049
64	SLU 33	0.03709	0.0019	-0.00745	-0.0031	0.015	0.005
64	SLU 34	0.0241	0.00167	-0.00778	-0.0026	0.01	0.004
64	SLU 35	0.0241	0.00167	-0.00778	-0.0026	0.01	0.004
64	SLU 36	0.02619	0.00169	-0.0074	-0.0026	0.011	0.004
64	SLU 37	0.02932	0.00172	-0.00683	-0.0027	0.0124	0.0041
64	SLU 38	0.02932	0.00173	-0.00683	-0.0027	0.0124	0.0041
64	SLU 39	0.02764	0.00172	-0.00753	-0.0027	0.0114	0.0041
64	SLU 40	0.02973	0.00175	-0.00715	-0.0027	0.0124	0.0042
64	SLU 41	0.03286	0.00178	-0.00658	-0.0028	0.0138	0.0042
64	SLU 42	0.03286	0.00178	-0.00658	-0.0028	0.0138	0.0042
64	SLU 43	0.03118	0.00178	-0.00728	-0.0028	0.0129	0.0042
64	SLU 44	0.03118	0.00178	-0.00728	-0.0028	0.0129	0.0042
64	SLU 45	0.03326	0.00181	-0.0069	-0.0028	0.0138	0.0043
64	SLU 46	0.03326	0.00181	-0.0069	-0.0028	0.0138	0.0043
64	SLU 47	0.02705	0.00173	-0.0079	-0.0028	0.0111	0.0043
64	SLU 48	0.02914	0.00175	-0.00752	-0.0028	0.012	0.0043
64	SLU 49	0.03227	0.00179	-0.00695	-0.0028	0.0134	0.0044
64	SLU 50	0.03227	0.00179	-0.00695	-0.0028	0.0134	0.0044
64	SLU 51	0.03058	0.00179	-0.00765	-0.0029	0.0125	0.0044
64	SLU 52	0.03267	0.00181	-0.00727	-0.0029	0.0134	0.0045
64	SLU 53	0.03581	0.00185	-0.0067	-0.0029	0.0149	0.0045
64	SLU 54	0.03581	0.00185	-0.0067	-0.0029	0.0149	0.0045

Nodo	Cont.	Spostamento			Rotazione		
Ind.	N.br.	ux	uy	uz	rx	ry	rz
64	SLU 55	0.03412	0.00184	-0.0074	-0.0029	0.0139	0.0046
64	SLU 56	0.03412	0.00184	-0.0074	-0.0029	0.0139	0.0046
64	SLU 57	0.03621	0.00187	-0.00702	-0.003	0.0149	0.0046
64	SLU 58	0.03621	0.00187	-0.00702	-0.003	0.0149	0.0046
64	SLU 59	0.03146	0.00182	-0.00808	-0.003	0.0126	0.0048
64	SLU 60	0.03146	0.00182	-0.00808	-0.003	0.0126	0.0048
64	SLU 61	0.03355	0.00185	-0.0077	-0.003	0.0136	0.0048
64	SLU 62	0.03355	0.00185	-0.0077	-0.003	0.0136	0.0048
64	SLU 63	0.035	0.00188	-0.00783	-0.0031	0.014	0.0049
64	SLU 64	0.035	0.00188	-0.00783	-0.0031	0.014	0.0049
64	SLU 65	0.03709	0.0019	-0.00745	-0.0031	0.015	0.0049
64	SLU 66	0.03709	0.0019	-0.00745	-0.0031	0.015	0.005
64	SLU 67	0.03133	0.00217	-0.01012	-0.0034	0.013	0.0051
64	SLU 68	0.03133	0.00217	-0.01012	-0.0034	0.013	0.0052
64	SLU 69	0.03342	0.00219	-0.00973	-0.0034	0.014	0.0052
64	SLU 70	0.03655	0.00222	-0.00916	-0.0034	0.0154	0.0053
64	SLU 71	0.03655	0.00222	-0.00916	-0.0034	0.0154	0.0053
64	SLU 72	0.03487	0.00222	-0.00987	-0.0035	0.0144	0.0053
64	SLU 73	0.03696	0.00225	-0.00948	-0.0035	0.0154	0.0053
64	SLU 74	0.04009	0.00228	-0.00891	-0.0035	0.0168	0.0054
64	SLU 75	0.04009	0.00228	-0.00891	-0.0035	0.0168	0.0054
64	SLU 76	0.03841	0.00228	-0.00961	-0.0035	0.0159	0.0054
64	SLU 77	0.03841	0.00228	-0.00961	-0.0036	0.0159	0.0054
64	SLU 78	0.0405	0.0023	-0.00923	-0.0036	0.0168	0.0055
64	SLU 79	0.0405	0.00231	-0.00923	-0.0036	0.0168	0.0055
64	SLU 80	0.03428	0.00223	-0.01024	-0.0035	0.0141	0.0055
64	SLU 81	0.03637	0.00225	-0.00986	-0.0036	0.015	0.0055
64	SLU 82	0.0395	0.00229	-0.00928	-0.0036	0.0164	0.0056
64	SLU 83	0.0395	0.00229	-0.00928	-0.0036	0.0164	0.0056
64	SLU 84	0.03781	0.00229	-0.00999	-0.0036	0.0155	0.0056
64	SLU 85	0.0399	0.00231	-0.0096	-0.0037	0.0164	0.0057
64	SLU 86	0.04304	0.00235	-0.00903	-0.0037	0.0179	0.0057
64	SLU 87	0.04304	0.00235	-0.00903	-0.0037	0.0179	0.0057
64	SLU 88	0.04135	0.00234	-0.00973	-0.0037	0.0169	0.0057
64	SLU 89	0.04135	0.00234	-0.00973	-0.0037	0.0169	0.0058
64	SLU 90	0.04344	0.00237	-0.00935	-0.0037	0.0179	0.0058
64	SLU 91	0.04344	0.00237	-0.00935	-0.0038	0.0179	0.0058
64	SLU 92	0.03869	0.00232	-0.01042	-0.0038	0.0156	0.006
64	SLU 93	0.03869	0.00232	-0.01042	-0.0038	0.0156	0.006
64	SLU 94	0.04078	0.00235	-0.01004	-0.0038	0.0166	0.006
64	SLU 95	0.04078	0.00235	-0.01004	-0.0038	0.0166	0.006
64	SLU 96	0.04223	0.00238	-0.01017	-0.0039	0.017	0.0061
64	SLU 97	0.04223	0.00238	-0.01017	-0.0039	0.017	0.0061
64	SLU 98	0.04432	0.0024	-0.00979	-0.0039	0.018	0.0061
64	SLU 99	0.04432	0.0024	-0.00979	-0.0039	0.018	0.0061
64	SLU 100	0.03133	0.00217	-0.01012	-0.0034	0.013	0.0051
64	SLU 101	0.03133	0.00217	-0.01012	-0.0034	0.013	0.0052
64	SLU 102	0.03342	0.00219	-0.00973	-0.0034	0.014	0.0052
64	SLU 103	0.03655	0.00222	-0.00916	-0.0034	0.0154	0.0053
64	SLU 104	0.03655	0.00222	-0.00916	-0.0034	0.0154	0.0053
64	SLU 105	0.03487	0.00222	-0.00987	-0.0035	0.0144	0.0053
64	SLU 106	0.03696	0.00225	-0.00948	-0.0035	0.0154	0.0053
64	SLU 107	0.04009	0.00228	-0.00891	-0.0035	0.0168	0.0054
64	SLU 108	0.04009	0.00228	-0.00891	-0.0035	0.0168	0.0054
64	SLU 109	0.03841	0.00228	-0.00961	-0.0035	0.0159	0.0054
64	SLU 110	0.03841	0.00228	-0.00961	-0.0036	0.0159	0.0054
64	SLU 111	0.0405	0.0023	-0.00923	-0.0036	0.0168	0.0055
64	SLU 112	0.0405	0.00231	-0.00923	-0.0036	0.0168	0.0055
64	SLU 113	0.03428	0.00223	-0.01024	-0.0035	0.0141	0.0055
64	SLU 114	0.03637	0.00225	-0.00986	-0.0036	0.015	0.0055
64	SLU 115	0.0395	0.00229	-0.00928	-0.0036	0.0164	0.0056
64	SLU 116	0.0395	0.00229	-0.00928	-0.0036	0.0164	0.0056
64	SLU 117	0.03781	0.00229	-0.00999	-0.0036	0.0155	0.0056
64	SLU 118	0.0399	0.00231	-0.0096	-0.0037	0.0164	0.0057
64	SLU 119	0.04304	0.00235	-0.00903	-0.0037	0.0179	0.0057
64	SLU 120	0.04304	0.00235	-0.00903	-0.0037	0.0179	0.0057
64	SLU 121	0.04135	0.00234	-0.00973	-0.0037	0.0169	0.0057
64	SLU 122	0.04135	0.00234	-0.00973	-0.0037	0.0169	0.0058
64	SLU 123	0.04344	0.00237	-0.00935	-0.0037	0.0179	0.0058
64	SLU 124	0.04344	0.00237	-0.00935	-0.0038	0.0179	0.0058
64	SLU 125	0.03869	0.00232	-0.01042	-0.0038	0.0156	0.006
64	SLU 126	0.03869	0.00232	-0.01042	-0.0038	0.0156	0.006
64	SLU 127	0.04078	0.00235	-0.01004	-0.0038	0.0166	0.006
64	SLU 128	0.04078	0.00235	-0.01004	-0.0038	0.0166	0.006
64	SLU 129	0.04223	0.00238	-0.01017	-0.0039	0.017	0.0061
64	SLU 130	0.04223	0.00238	-0.01017	-0.0039	0.017	0.0061
64	SLU 131	0.04432	0.0024	-0.00979	-0.0039	0.018	0.0061
64	SLU 132	0.04432	0.0024	-0.00979	-0.0039	0.018	0.0061
64	SLE RA 1	0.0241	0.00167	-0.00778	-0.0026	0.01	0.004
64	SLE RA 2	0.0241	0.00167	-0.00778	-0.0026	0.01	0.004
64	SLE RA 3	0.02549	0.00168	-0.00753	-0.0026	0.0107	0.004
64	SLE RA 4	0.02758	0.00171	-0.00715	-0.0026	0.0116	0.004
64	SLE RA 5	0.02758	0.00171	-0.00715	-0.0026	0.0116	0.004
64	SLE RA 6	0.02646	0.0017	-0.00761	-0.0027	0.011	0.0041
64	SLE RA 7	0.02785	0.00172	-0.00736	-0.0027	0.0116	0.0041
64	SLE RA 8	0.02994	0.00174	-0.00698	-0.0027	0.0126	0.0041
64	SLE RA 9	0.02994	0.00174	-0.00698	-0.0027	0.0126	0.0041
64	SLE RA 10	0.02882	0.00174	-0.00745	-0.0027	0.0119	0.0041
64	SLE RA 11	0.02882	0.00174	-0.00745	-0.0027	0.0119	0.0042
64	SLE RA 12	0.03021	0.00176	-0.00719	-0.0027	0.0126	0.0042
64	SLE RA 13	0.03021	0.00176	-0.00719	-0.0027	0.0126	0.0042
64	SLE RA 14	0.02606	0.00171	-0.00786	-0.0027	0.0107	0.0042
64	SLE RA 15	0.02746	0.00172	-0.00761	-0.0027	0.0113	0.0042
64	SLE RA 16	0.02955	0.00175	-0.00723	-0.0028	0.0123	0.0042
64	SLE RA 17	0.02955	0.00175	-0.00723	-0.0028	0.0123	0.0042

Nodo	Cont.	Spostamento			Rotazione		
Ind.	N.br.	ux	uy	uz	rx	ry	rz
64	SLE RA 18	0.02842	0.00175	-0.00769	-0.0028	0.0117	0.0043
64	SLE RA 19	0.02982	0.00176	-0.00744	-0.0028	0.0123	0.0043
64	SLE RA 20	0.0319	0.00179	-0.00706	-0.0028	0.0132	0.0043
64	SLE RA 21	0.0319	0.00179	-0.00706	-0.0028	0.0132	0.0043
64	SLE RA 22	0.03078	0.00178	-0.00753	-0.0028	0.0126	0.0044
64	SLE RA 23	0.03078	0.00179	-0.00753	-0.0028	0.0126	0.0044
64	SLE RA 24	0.03217	0.0018	-0.00727	-0.0028	0.0132	0.0044
64	SLE RA 25	0.03217	0.0018	-0.00727	-0.0028	0.0132	0.0044
64	SLE RA 26	0.02901	0.00177	-0.00798	-0.0029	0.0117	0.0045
64	SLE RA 27	0.02901	0.00177	-0.00798	-0.0029	0.0117	0.0045
64	SLE RA 28	0.0304	0.00179	-0.00773	-0.0029	0.0124	0.0045
64	SLE RA 29	0.0304	0.00179	-0.00773	-0.0029	0.0124	0.0045
64	SLE RA 30	0.03137	0.00181	-0.00782	-0.0029	0.0127	0.0046
64	SLE RA 31	0.03137	0.00181	-0.00782	-0.0029	0.0127	0.0046
64	SLE RA 32	0.03276	0.00182	-0.00756	-0.003	0.0133	0.0046
64	SLE RA 33	0.03276	0.00183	-0.00756	-0.003	0.0133	0.0046
64	SLE FR 1	0.0241	0.00167	-0.00778	-0.0026	0.01	0.004
64	SLE FR 2	0.0241	0.00167	-0.00778	-0.0026	0.01	0.004
64	SLE FR 3	0.02549	0.00168	-0.00753	-0.0026	0.0107	0.004
64	SLE FR 4	0.02505	0.00168	-0.00772	-0.0026	0.0104	0.004
64	SLE FR 5	0.02606	0.00171	-0.00786	-0.0027	0.0107	0.0042
64	SLE QP 1	0.0241	0.00167	-0.00778	-0.0026	0.01	0.004
64	SLO 1	-0.06935	0.0015	-0.04758	-0.1123	-0.0401	0.2664
64	SLO 2	-0.06935	0.0015	-0.04758	-0.1123	-0.0401	0.2664
64	SLO 3	-0.06935	0.00184	-0.04758	0.1071	-0.0401	-0.2585
64	SLO 4	-0.06935	0.00184	-0.04758	0.1071	-0.0401	-0.2585
64	SLO 5	-0.00393	0.0011	-0.01972	-0.3681	-0.005	0.8789
64	SLO 6	-0.00393	0.0011	-0.01972	-0.3681	-0.005	0.8789
64	SLO 7	-0.00393	0.00223	-0.01972	0.3629	-0.005	-0.8709
64	SLO 8	-0.00393	0.00223	-0.01972	0.3629	-0.005	-0.8709
64	SLO 9	0.05214	0.0011	0.00416	-0.3681	0.025	0.8789
64	SLO 10	0.05214	0.0011	0.00416	-0.3681	0.025	0.8789
64	SLO 11	0.05214	0.00223	0.00416	0.3629	0.025	-0.871
64	SLO 12	0.05214	0.00223	0.00416	0.3629	0.025	-0.871
64	SLO 13	0.11755	0.00149	0.03202	-0.1122	0.0601	0.2664
64	SLO 14	0.11755	0.00149	0.03202	-0.1122	0.0601	0.2664
64	SLO 15	0.11755	0.00183	0.03202	0.1071	0.0601	-0.2585
64	SLO 16	0.11755	0.00183	0.03202	0.1071	0.0601	-0.2585
64	SLD 1	-0.05258	0.00152	-0.04044	-0.1039	-0.0311	0.2465
64	SLD 2	-0.05258	0.00152	-0.04044	-0.1039	-0.0311	0.2465
64	SLD 3	-0.05258	0.00183	-0.04044	0.0987	-0.0311	-0.2386
64	SLD 4	-0.05258	0.00183	-0.04044	0.0987	-0.0311	-0.2386
64	SLD 5	0.0011	0.00115	-0.01758	-0.3403	-0.0023	0.8124
64	SLD 6	0.0011	0.00115	-0.01758	-0.3403	-0.0023	0.8124
64	SLD 7	0.0011	0.00219	-0.01758	0.3352	-0.0023	-0.8044
64	SLD 8	0.0011	0.00219	-0.01758	0.3352	-0.0023	-0.8044
64	SLD 9	0.04711	0.00114	0.00201	-0.3403	0.0223	0.8124
64	SLD 10	0.04711	0.00114	0.00201	-0.3403	0.0223	0.8124
64	SLD 11	0.04711	0.00218	0.00201	0.3352	0.0223	-0.8044
64	SLD 12	0.04711	0.00218	0.00201	0.3352	0.0223	-0.8044
64	SLD 13	0.10078	0.0015	0.02487	-0.1039	0.0511	0.2465
64	SLD 14	0.10078	0.0015	0.02487	-0.1039	0.0511	0.2465
64	SLD 15	0.10078	0.00182	0.02487	0.0987	0.0511	-0.2386
64	SLD 16	0.10078	0.00182	0.02487	0.0987	0.0511	-0.2386
64	SLV 1	-0.1472	0.00127	-0.08074	-0.2699	-0.0818	0.6436
64	SLV 2	-0.1472	0.00127	-0.08074	-0.2699	-0.0818	0.6436
64	SLV 3	-0.1472	0.00209	-0.08074	0.2646	-0.0818	-0.6357
64	SLV 4	-0.1472	0.00209	-0.08074	0.2646	-0.0818	-0.6357
64	SLV 5	-0.02729	0.0003	-0.02967	-0.8934	-0.0175	2.1361
64	SLV 6	-0.02729	0.0003	-0.02967	-0.8934	-0.0175	2.1361
64	SLV 7	-0.02729	0.00304	-0.02967	0.8882	-0.0175	-2.1282
64	SLV 8	-0.02729	0.00304	-0.02967	0.8882	-0.0175	-2.1282
64	SLV 9	0.07549	0.00029	0.0141	-0.8934	0.0376	2.1361
64	SLV 10	0.07549	0.00029	0.0141	-0.8934	0.0376	2.1361
64	SLV 11	0.07549	0.00304	0.0141	0.8882	0.0376	-2.1282
64	SLV 12	0.07549	0.00304	0.0141	0.8882	0.0376	-2.1282
64	SLV 13	0.19541	0.00124	0.06517	-0.2698	0.1018	0.6436
64	SLV 14	0.19541	0.00124	0.06517	-0.2698	0.1018	0.6436
64	SLV 15	0.19541	0.00206	0.06517	0.2647	0.1018	-0.6357
64	SLV 16	0.19541	0.00206	0.06517	0.2647	0.1018	-0.6357
65	SLU 1	-0.02394	0.00462	-0.0096	-0.0072	-0.0101	-0.0111
65	SLU 2	-0.02394	0.00462	-0.0096	-0.0072	-0.0101	-0.0111
65	SLU 3	-0.02498	0.00468	-0.00944	-0.0073	-0.0106	-0.0113
65	SLU 4	-0.02655	0.00478	-0.00919	-0.0074	-0.0113	-0.0115
65	SLU 5	-0.02655	0.00478	-0.00919	-0.0074	-0.0113	-0.0115
65	SLU 6	-0.02559	0.00478	-0.0096	-0.0075	-0.0107	-0.0115
65	SLU 7	-0.02663	0.00485	-0.00943	-0.0076	-0.0112	-0.0117
65	SLU 8	-0.0282	0.00494	-0.00919	-0.0077	-0.0119	-0.0119
65	SLU 9	-0.0282	0.00494	-0.00919	-0.0077	-0.0119	-0.0119
65	SLU 10	-0.02724	0.00494	-0.00959	-0.0077	-0.0114	-0.0119
65	SLU 11	-0.02724	0.00494	-0.00959	-0.0077	-0.0114	-0.0119
65	SLU 12	-0.02828	0.00501	-0.00943	-0.0078	-0.0119	-0.012
65	SLU 13	-0.02828	0.00501	-0.00943	-0.0078	-0.0119	-0.012
65	SLU 14	-0.02521	0.0048	-0.00983	-0.0076	-0.0105	-0.0117
65	SLU 15	-0.02626	0.00486	-0.00966	-0.0077	-0.011	-0.0119
65	SLU 16	-0.02782	0.00496	-0.00942	-0.0078	-0.0117	-0.0121
65	SLU 17	-0.02782	0.00496	-0.00942	-0.0078	-0.0117	-0.0121
65	SLU 18	-0.02686	0.00496	-0.00982	-0.0078	-0.0111	-0.0121
65	SLU 19	-0.02791	0.00502	-0.00966	-0.0079	-0.0116	-0.0123
65	SLU 20	-0.02947	0.00512	-0.00941	-0.008	-0.0123	-0.0125
65	SLU 21	-0.02947	0.00512	-0.00941	-0.0081	-0.0123	-0.0125
65	SLU 22	-0.02851	0.00512	-0.00981	-0.0081	-0.0118	-0.0125
65	SLU 23	-0.02851	0.00512	-0.00981	-0.0081	-0.0118	-0.0125
65	SLU 24	-0.02956	0.00519	-0.00965	-0.0082	-0.0123	-0.0126
65	SLU 25	-0.02956	0.00519	-0.00965	-0.0082	-0.0123	-0.0126

Nodo	Cont.	Spostamento			Rotazione		
Ind.	N.br.	ux	uy	uz	rx	ry	rz
65	SLU 26	-0.02713	0.00506	-0.01016	-0.0081	-0.0111	-0.0126
65	SLU 27	-0.02713	0.00506	-0.01016	-0.0081	-0.0111	-0.0126
65	SLU 28	-0.02817	0.00513	-0.00999	-0.0082	-0.0116	-0.0128
65	SLU 29	-0.02817	0.00513	-0.00999	-0.0082	-0.0116	-0.0128
65	SLU 30	-0.02878	0.00522	-0.01015	-0.0083	-0.0118	-0.013
65	SLU 31	-0.02878	0.00522	-0.01015	-0.0083	-0.0118	-0.013
65	SLU 32	-0.02982	0.00529	-0.00999	-0.0084	-0.0122	-0.0131
65	SLU 33	-0.02982	0.00529	-0.00999	-0.0084	-0.0122	-0.0132
65	SLU 34	-0.02394	0.00462	-0.0096	-0.0072	-0.0101	-0.0111
65	SLU 35	-0.02394	0.00462	-0.0096	-0.0072	-0.0101	-0.0111
65	SLU 36	-0.02498	0.00468	-0.00944	-0.0073	-0.0106	-0.0113
65	SLU 37	-0.02655	0.00478	-0.00919	-0.0074	-0.0113	-0.0115
65	SLU 38	-0.02655	0.00478	-0.00919	-0.0074	-0.0113	-0.0115
65	SLU 39	-0.02559	0.00478	-0.0096	-0.0075	-0.0107	-0.0115
65	SLU 40	-0.02663	0.00485	-0.00943	-0.0076	-0.0112	-0.0117
65	SLU 41	-0.0282	0.00494	-0.00919	-0.0077	-0.0119	-0.0119
65	SLU 42	-0.0282	0.00494	-0.00919	-0.0077	-0.0119	-0.0119
65	SLU 43	-0.02724	0.00494	-0.00959	-0.0077	-0.0114	-0.0119
65	SLU 44	-0.02724	0.00494	-0.00959	-0.0077	-0.0114	-0.0119
65	SLU 45	-0.02828	0.00501	-0.00943	-0.0078	-0.0119	-0.012
65	SLU 46	-0.02828	0.00501	-0.00943	-0.0078	-0.0119	-0.012
65	SLU 47	-0.02521	0.0048	-0.00983	-0.0076	-0.0105	-0.0117
65	SLU 48	-0.02626	0.00486	-0.00966	-0.0077	-0.011	-0.0119
65	SLU 49	-0.02782	0.00496	-0.00942	-0.0078	-0.0117	-0.0121
65	SLU 50	-0.02782	0.00496	-0.00942	-0.0078	-0.0117	-0.0121
65	SLU 51	-0.02686	0.00496	-0.00982	-0.0078	-0.0111	-0.0121
65	SLU 52	-0.02791	0.00502	-0.00966	-0.0079	-0.0116	-0.0123
65	SLU 53	-0.02947	0.00512	-0.00941	-0.008	-0.0123	-0.0125
65	SLU 54	-0.02947	0.00512	-0.00941	-0.0081	-0.0123	-0.0125
65	SLU 55	-0.02851	0.00512	-0.00981	-0.0081	-0.0118	-0.0125
65	SLU 56	-0.02851	0.00512	-0.00981	-0.0081	-0.0118	-0.0125
65	SLU 57	-0.02956	0.00519	-0.00965	-0.0082	-0.0123	-0.0126
65	SLU 58	-0.02956	0.00519	-0.00965	-0.0082	-0.0123	-0.0126
65	SLU 59	-0.02713	0.00506	-0.01016	-0.0081	-0.0111	-0.0126
65	SLU 60	-0.02713	0.00506	-0.01016	-0.0081	-0.0111	-0.0126
65	SLU 61	-0.02817	0.00513	-0.00999	-0.0082	-0.0116	-0.0128
65	SLU 62	-0.02817	0.00513	-0.00999	-0.0082	-0.0116	-0.0128
65	SLU 63	-0.02878	0.00522	-0.01015	-0.0083	-0.0118	-0.013
65	SLU 64	-0.02878	0.00522	-0.01015	-0.0083	-0.0118	-0.013
65	SLU 65	-0.02982	0.00529	-0.00999	-0.0084	-0.0122	-0.0131
65	SLU 66	-0.02982	0.00529	-0.00999	-0.0084	-0.0122	-0.0132
65	SLU 67	-0.03112	0.006	-0.01249	-0.0094	-0.0131	-0.0144
65	SLU 68	-0.03112	0.006	-0.01249	-0.0094	-0.0131	-0.0144
65	SLU 69	-0.03216	0.00607	-0.01232	-0.0095	-0.0136	-0.0146
65	SLU 70	-0.03373	0.00617	-0.01208	-0.0096	-0.0143	-0.0148
65	SLU 71	-0.03373	0.00617	-0.01208	-0.0096	-0.0143	-0.0148
65	SLU 72	-0.03277	0.00617	-0.01248	-0.0096	-0.0137	-0.0148
65	SLU 73	-0.03381	0.00623	-0.01232	-0.0097	-0.0142	-0.015
65	SLU 74	-0.03538	0.00633	-0.01207	-0.0099	-0.0149	-0.0152
65	SLU 75	-0.03538	0.00633	-0.01207	-0.0099	-0.0149	-0.0152
65	SLU 76	-0.03442	0.00633	-0.01247	-0.0099	-0.0144	-0.0152
65	SLU 77	-0.03442	0.00633	-0.01247	-0.0099	-0.0144	-0.0152
65	SLU 78	-0.03546	0.00639	-0.01231	-0.01	-0.0149	-0.0154
65	SLU 79	-0.03546	0.00639	-0.01231	-0.01	-0.0149	-0.0154
65	SLU 80	-0.03239	0.00618	-0.01271	-0.0097	-0.0135	-0.015
65	SLU 81	-0.03344	0.00625	-0.01254	-0.0098	-0.014	-0.0152
65	SLU 82	-0.035	0.00634	-0.0123	-0.01	-0.0147	-0.0154
65	SLU 83	-0.035	0.00634	-0.0123	-0.01	-0.0147	-0.0154
65	SLU 84	-0.03404	0.00634	-0.0127	-0.01	-0.0142	-0.0154
65	SLU 85	-0.03509	0.00641	-0.01254	-0.0101	-0.0146	-0.0156
65	SLU 86	-0.03665	0.00651	-0.01229	-0.0102	-0.0154	-0.0158
65	SLU 87	-0.03665	0.00651	-0.01229	-0.0102	-0.0154	-0.0158
65	SLU 88	-0.03569	0.00651	-0.01269	-0.0102	-0.0148	-0.0158
65	SLU 89	-0.03569	0.00651	-0.01269	-0.0102	-0.0148	-0.0158
65	SLU 90	-0.03674	0.00657	-0.01253	-0.0103	-0.0153	-0.016
65	SLU 91	-0.03674	0.00657	-0.01253	-0.0103	-0.0153	-0.016
65	SLU 92	-0.03431	0.00645	-0.01304	-0.0102	-0.0141	-0.0159
65	SLU 93	-0.03431	0.00645	-0.01304	-0.0102	-0.0141	-0.0159
65	SLU 94	-0.03535	0.00651	-0.01287	-0.0103	-0.0146	-0.0161
65	SLU 95	-0.03535	0.00651	-0.01287	-0.0103	-0.0146	-0.0161
65	SLU 96	-0.03596	0.00661	-0.01303	-0.0105	-0.0148	-0.0163
65	SLU 97	-0.03596	0.00661	-0.01303	-0.0105	-0.0148	-0.0163
65	SLU 98	-0.037	0.00668	-0.01287	-0.0106	-0.0153	-0.0165
65	SLU 99	-0.037	0.00668	-0.01287	-0.0106	-0.0153	-0.0165
65	SLU 100	-0.03112	0.006	-0.01249	-0.0094	-0.0131	-0.0144
65	SLU 101	-0.03112	0.006	-0.01249	-0.0094	-0.0131	-0.0144
65	SLU 102	-0.03216	0.00607	-0.01232	-0.0095	-0.0136	-0.0146
65	SLU 103	-0.03373	0.00617	-0.01208	-0.0096	-0.0143	-0.0148
65	SLU 104	-0.03373	0.00617	-0.01208	-0.0096	-0.0143	-0.0148
65	SLU 105	-0.03277	0.00617	-0.01248	-0.0096	-0.0137	-0.0148
65	SLU 106	-0.03381	0.00623	-0.01232	-0.0097	-0.0142	-0.015
65	SLU 107	-0.03538	0.00633	-0.01207	-0.0099	-0.0149	-0.0152
65	SLU 108	-0.03538	0.00633	-0.01207	-0.0099	-0.0149	-0.0152
65	SLU 109	-0.03442	0.00633	-0.01247	-0.0099	-0.0144	-0.0152
65	SLU 110	-0.03442	0.00633	-0.01247	-0.0099	-0.0144	-0.0152
65	SLU 111	-0.03546	0.00639	-0.01231	-0.01	-0.0149	-0.0154
65	SLU 112	-0.03546	0.00639	-0.01231	-0.01	-0.0149	-0.0154
65	SLU 113	-0.03239	0.00618	-0.01271	-0.0097	-0.0135	-0.015
65	SLU 114	-0.03344	0.00625	-0.01254	-0.0098	-0.014	-0.0152
65	SLU 115	-0.035	0.00634	-0.0123	-0.01	-0.0147	-0.0154
65	SLU 116	-0.035	0.00634	-0.0123	-0.01	-0.0147	-0.0154
65	SLU 117	-0.03404	0.00634	-0.0127	-0.01	-0.0142	-0.0154
65	SLU 118	-0.03509	0.00641	-0.01254	-0.0101	-0.0146	-0.0156
65	SLU 119	-0.03665	0.00651	-0.01229	-0.0102	-0.0154	-0.0158
65	SLU 120	-0.03665	0.00651	-0.01229	-0.0102	-0.0154	-0.0158

Nodo	Cont.	Spostamento			Rotazione		
Ind.	N.br.	ux	uy	uz	rx	ry	rz
65	SLU 121	-0.03569	0.00651	-0.01269	-0.0102	-0.0148	-0.0158
65	SLU 122	-0.03569	0.00651	-0.01269	-0.0102	-0.0148	-0.0158
65	SLU 123	-0.03674	0.00657	-0.01253	-0.0103	-0.0153	-0.016
65	SLU 124	-0.03674	0.00657	-0.01253	-0.0103	-0.0153	-0.016
65	SLU 125	-0.03431	0.00645	-0.01304	-0.0102	-0.0141	-0.0159
65	SLU 126	-0.03431	0.00645	-0.01304	-0.0102	-0.0141	-0.0159
65	SLU 127	-0.03535	0.00651	-0.01287	-0.0103	-0.0146	-0.0161
65	SLU 128	-0.03535	0.00651	-0.01287	-0.0103	-0.0146	-0.0161
65	SLU 129	-0.03596	0.00661	-0.01303	-0.0105	-0.0148	-0.0163
65	SLU 130	-0.03596	0.00661	-0.01303	-0.0105	-0.0148	-0.0163
65	SLU 131	-0.037	0.00668	-0.01287	-0.0106	-0.0153	-0.0165
65	SLU 132	-0.037	0.00668	-0.01287	-0.0106	-0.0153	-0.0165
65	SLE RA 1	-0.02394	0.00462	-0.0096	-0.0072	-0.0101	-0.0111
65	SLE RA 2	-0.02394	0.00462	-0.0096	-0.0072	-0.0101	-0.0111
65	SLE RA 3	-0.02463	0.00466	-0.0095	-0.0073	-0.0104	-0.0112
65	SLE RA 4	-0.02568	0.00473	-0.00933	-0.0074	-0.0109	-0.0113
65	SLE RA 5	-0.02568	0.00473	-0.00933	-0.0074	-0.0109	-0.0113
65	SLE RA 6	-0.02504	0.00473	-0.0096	-0.0074	-0.0105	-0.0114
65	SLE RA 7	-0.02573	0.00477	-0.00949	-0.0074	-0.0108	-0.0115
65	SLE RA 8	-0.02678	0.00484	-0.00933	-0.0075	-0.0113	-0.0116
65	SLE RA 9	-0.02678	0.00484	-0.00933	-0.0075	-0.0113	-0.0116
65	SLE RA 10	-0.02614	0.00483	-0.0096	-0.0075	-0.0109	-0.0116
65	SLE RA 11	-0.02614	0.00483	-0.0096	-0.0075	-0.0109	-0.0116
65	SLE RA 12	-0.02683	0.00488	-0.00949	-0.0076	-0.0113	-0.0117
65	SLE RA 13	-0.02683	0.00488	-0.00949	-0.0076	-0.0113	-0.0117
65	SLE RA 14	-0.02479	0.00474	-0.00975	-0.0074	-0.0103	-0.0115
65	SLE RA 15	-0.02548	0.00478	-0.00964	-0.0075	-0.0107	-0.0116
65	SLE RA 16	-0.02653	0.00485	-0.00948	-0.0076	-0.0111	-0.0117
65	SLE RA 17	-0.02653	0.00485	-0.00948	-0.0076	-0.0111	-0.0118
65	SLE RA 18	-0.02589	0.00484	-0.00975	-0.0076	-0.0108	-0.0118
65	SLE RA 19	-0.02658	0.00489	-0.00964	-0.0077	-0.0111	-0.0119
65	SLE RA 20	-0.02763	0.00495	-0.00947	-0.0078	-0.0116	-0.012
65	SLE RA 21	-0.02763	0.00495	-0.00947	-0.0078	-0.0116	-0.012
65	SLE RA 22	-0.02699	0.00495	-0.00974	-0.0078	-0.0112	-0.012
65	SLE RA 23	-0.02699	0.00495	-0.00974	-0.0078	-0.0112	-0.012
65	SLE RA 24	-0.02768	0.005	-0.00963	-0.0078	-0.0115	-0.0121
65	SLE RA 25	-0.02768	0.005	-0.00963	-0.0078	-0.0115	-0.0121
65	SLE RA 26	-0.02606	0.00491	-0.00997	-0.0078	-0.0108	-0.0121
65	SLE RA 27	-0.02606	0.00491	-0.00997	-0.0078	-0.0108	-0.0121
65	SLE RA 28	-0.02676	0.00496	-0.00986	-0.0078	-0.0111	-0.0122
65	SLE RA 29	-0.02676	0.00496	-0.00986	-0.0079	-0.0111	-0.0122
65	SLE RA 30	-0.02716	0.00502	-0.00997	-0.008	-0.0112	-0.0124
65	SLE RA 31	-0.02716	0.00502	-0.00997	-0.008	-0.0112	-0.0124
65	SLE RA 32	-0.02786	0.00507	-0.00986	-0.008	-0.0115	-0.0125
65	SLE RA 33	-0.02786	0.00507	-0.00986	-0.008	-0.0115	-0.0125
65	SLE FR 1	-0.02394	0.00462	-0.0096	-0.0072	-0.0101	-0.0111
65	SLE FR 2	-0.02394	0.00462	-0.0096	-0.0072	-0.0101	-0.0111
65	SLE FR 3	-0.02463	0.00466	-0.0095	-0.0073	-0.0104	-0.0112
65	SLE FR 4	-0.02438	0.00466	-0.0096	-0.0073	-0.0102	-0.0112
65	SLE FR 5	-0.02479	0.00474	-0.00975	-0.0074	-0.0103	-0.0115
65	SLE QP 1	-0.02394	0.00462	-0.0096	-0.0072	-0.0101	-0.0111
65	SLO 1	-0.11571	0.00439	0.02952	-0.1168	-0.0593	-0.2735
65	SLO 2	-0.11571	0.00439	0.02952	-0.1168	-0.0593	-0.2735
65	SLO 3	-0.11571	0.0048	0.02946	0.1024	-0.0593	0.2513
65	SLO 4	-0.11571	0.0048	0.02946	0.1024	-0.0593	0.2513
65	SLO 5	-0.05147	0.00392	0.00222	-0.3726	-0.0248	-0.8857
65	SLO 6	-0.05147	0.00392	0.00222	-0.3726	-0.0248	-0.8857
65	SLO 7	-0.05147	0.0053	0.00203	0.3582	-0.0248	0.8636
65	SLO 8	-0.05147	0.0053	0.00203	0.3582	-0.0248	0.8636
65	SLO 9	0.00359	0.00393	-0.02123	-0.3726	0.0047	-0.8858
65	SLO 10	0.00359	0.00393	-0.02123	-0.3726	0.0047	-0.8858
65	SLO 11	0.00359	0.00532	-0.02143	0.3582	0.0047	0.8635
65	SLO 12	0.00359	0.00532	-0.02143	0.3582	0.0047	0.8635
65	SLO 13	0.06783	0.00443	-0.04867	-0.1168	0.0391	-0.2735
65	SLO 14	0.06783	0.00443	-0.04867	-0.1168	0.0391	-0.2735
65	SLO 15	0.06783	0.00485	-0.04872	0.1024	0.0391	0.2512
65	SLO 16	0.06783	0.00485	-0.04872	0.1024	0.0391	0.2512
65	SLD 1	-0.09924	0.00441	0.0225	-0.1085	-0.0504	-0.2535
65	SLD 2	-0.09924	0.00441	0.0225	-0.1085	-0.0504	-0.2535
65	SLD 3	-0.09924	0.00479	0.02244	0.0941	-0.0504	0.2314
65	SLD 4	-0.09924	0.00479	0.02244	0.0941	-0.0504	0.2314
65	SLD 5	-0.04653	0.00397	0.00011	-0.3448	-0.0222	-0.8193
65	SLD 6	-0.04653	0.00397	0.00011	-0.3448	-0.0222	-0.8193
65	SLD 7	-0.04653	0.00525	-0.00007	0.3304	-0.0222	0.7971
65	SLD 8	-0.04653	0.00525	-0.00007	0.3304	-0.0222	0.7971
65	SLD 9	-0.00135	0.00398	-0.01914	-0.3448	0.002	-0.8193
65	SLD 10	-0.00135	0.00398	-0.01914	-0.3448	0.002	-0.8193
65	SLD 11	-0.00135	0.00526	-0.01932	0.3304	0.002	0.797
65	SLD 12	-0.00135	0.00526	-0.01932	0.3304	0.002	0.797
65	SLD 13	0.05136	0.00444	-0.04165	-0.1085	0.0303	-0.2536
65	SLD 14	0.05136	0.00444	-0.04165	-0.1085	0.0303	-0.2536
65	SLD 15	0.05136	0.00483	-0.04171	0.0941	0.0303	0.2313
65	SLD 16	0.05136	0.00483	-0.04171	0.0941	0.0303	0.2313
65	SLV 1	-0.19215	0.00407	0.06212	-0.2743	-0.1002	-0.6505
65	SLV 2	-0.19215	0.00407	0.06212	-0.2743	-0.1002	-0.6505
65	SLV 3	-0.19215	0.00508	0.06198	0.26	-0.1002	0.6284
65	SLV 4	-0.19215	0.00508	0.06198	0.26	-0.1002	0.6284
65	SLV 5	-0.0744	0.00292	0.01213	-0.8976	-0.0371	-2.1426
65	SLV 6	-0.0744	0.00292	0.01213	-0.8976	-0.0371	-2.1426
65	SLV 7	-0.0744	0.00629	0.01165	0.8832	-0.0371	2.1205
65	SLV 8	-0.0744	0.00629	0.01165	0.8832	-0.0371	2.1205
65	SLV 9	0.02653	0.00294	-0.03086	-0.8976	0.017	-2.1427
65	SLV 10	0.02653	0.00294	-0.03086	-0.8976	0.017	-2.1427
65	SLV 11	0.02653	0.00632	-0.03134	0.8832	0.0169	2.1204
65	SLV 12	0.02653	0.00632	-0.03134	0.8832	0.0169	2.1204

Nodo	Cont.	Spostamento			Rotazione		
Ind.	N.br.	ux	uy	uz	rx	ry	rz
65	SLV 13	0.14428	0.00415	-0.08119	-0.2744	0.0801	-0.6506
65	SLV 14	0.14428	0.00415	-0.08119	-0.2744	0.0801	-0.6506
65	SLV 15	0.14428	0.00517	-0.08133	0.2599	0.0801	0.6283
65	SLV 16	0.14428	0.00517	-0.08133	0.2599	0.0801	0.6283
66	SLU 1	-0.01289	0.00451	0.02667	-0.0018	-0.0094	0
66	SLU 2	-0.01289	0.00451	0.02667	-0.0018	-0.0094	0
66	SLU 3	-0.01353	0.00458	0.02831	-0.0018	-0.0099	0
66	SLU 4	-0.0145	0.00467	0.03079	-0.0019	-0.0105	0
66	SLU 5	-0.0145	0.00467	0.03079	-0.0019	-0.0105	0
66	SLU 6	-0.01382	0.00467	0.02893	-0.0019	-0.0101	0
66	SLU 7	-0.01447	0.00474	0.03058	-0.0019	-0.0105	0
66	SLU 8	-0.01543	0.00483	0.03306	-0.0019	-0.0112	0
66	SLU 9	-0.01543	0.00483	0.03306	-0.0019	-0.0112	0
66	SLU 10	-0.01475	0.00483	0.0312	-0.0019	-0.0108	0
66	SLU 11	-0.01475	0.00483	0.0312	-0.0019	-0.0108	0
66	SLU 12	-0.0154	0.0049	0.03285	-0.002	-0.0112	0
66	SLU 13	-0.0154	0.0049	0.03285	-0.002	-0.0112	0
66	SLU 14	-0.01353	0.00469	0.02812	-0.0019	-0.01	0
66	SLU 15	-0.01418	0.00475	0.02977	-0.0019	-0.0104	0
66	SLU 16	-0.01514	0.00485	0.03224	-0.0019	-0.011	0
66	SLU 17	-0.01514	0.00485	0.03224	-0.0019	-0.011	0
66	SLU 18	-0.01446	0.00484	0.03039	-0.0019	-0.0107	0
66	SLU 19	-0.01511	0.00491	0.03203	-0.002	-0.0111	0
66	SLU 20	-0.01607	0.005	0.03451	-0.002	-0.0117	0
66	SLU 21	-0.01607	0.005	0.03451	-0.002	-0.0117	0
66	SLU 22	-0.01539	0.005	0.03265	-0.002	-0.0113	0
66	SLU 23	-0.01539	0.005	0.03265	-0.002	-0.0113	0
66	SLU 24	-0.01604	0.00507	0.0343	-0.002	-0.0118	0
66	SLU 25	-0.01604	0.00507	0.0343	-0.002	-0.0118	0
66	SLU 26	-0.01449	0.00494	0.03029	-0.002	-0.0108	0
66	SLU 27	-0.01449	0.00494	0.03029	-0.002	-0.0108	0
66	SLU 28	-0.01514	0.00501	0.03194	-0.002	-0.0112	0
66	SLU 29	-0.01514	0.00501	0.03194	-0.002	-0.0112	0
66	SLU 30	-0.01543	0.0051	0.03256	-0.0021	-0.0115	0
66	SLU 31	-0.01543	0.0051	0.03256	-0.0021	-0.0115	0
66	SLU 32	-0.01607	0.00517	0.03421	-0.0021	-0.0119	0
66	SLU 33	-0.01607	0.00517	0.03421	-0.0021	-0.0119	0
66	SLU 34	-0.01289	0.00451	0.02667	-0.0018	-0.0094	0
66	SLU 35	-0.01289	0.00451	0.02667	-0.0018	-0.0094	0
66	SLU 36	-0.01353	0.00458	0.02831	-0.0018	-0.0099	0
66	SLU 37	-0.0145	0.00467	0.03079	-0.0019	-0.0105	0
66	SLU 38	-0.0145	0.00467	0.03079	-0.0019	-0.0105	0
66	SLU 39	-0.01382	0.00467	0.02893	-0.0019	-0.0101	0
66	SLU 40	-0.01447	0.00474	0.03058	-0.0019	-0.0105	0
66	SLU 41	-0.01543	0.00483	0.03306	-0.0019	-0.0112	0
66	SLU 42	-0.01543	0.00483	0.03306	-0.0019	-0.0112	0
66	SLU 43	-0.01475	0.00483	0.0312	-0.0019	-0.0108	0
66	SLU 44	-0.01475	0.00483	0.0312	-0.0019	-0.0108	0
66	SLU 45	-0.0154	0.0049	0.03285	-0.002	-0.0112	0
66	SLU 46	-0.0154	0.0049	0.03285	-0.002	-0.0112	0
66	SLU 47	-0.01353	0.00469	0.02812	-0.0019	-0.01	0
66	SLU 48	-0.01418	0.00475	0.02977	-0.0019	-0.0104	0
66	SLU 49	-0.01514	0.00485	0.03224	-0.0019	-0.011	0
66	SLU 50	-0.01514	0.00485	0.03224	-0.0019	-0.011	0
66	SLU 51	-0.01446	0.00484	0.03039	-0.0019	-0.0107	0
66	SLU 52	-0.01511	0.00491	0.03203	-0.002	-0.0111	0
66	SLU 53	-0.01607	0.005	0.03451	-0.002	-0.0117	0
66	SLU 54	-0.01607	0.005	0.03451	-0.002	-0.0117	0
66	SLU 55	-0.01539	0.005	0.03265	-0.002	-0.0113	0
66	SLU 56	-0.01539	0.005	0.03265	-0.002	-0.0113	0
66	SLU 57	-0.01604	0.00507	0.0343	-0.002	-0.0118	0
66	SLU 58	-0.01604	0.00507	0.0343	-0.002	-0.0118	0
66	SLU 59	-0.01449	0.00494	0.03029	-0.002	-0.0108	0
66	SLU 60	-0.01449	0.00494	0.03029	-0.002	-0.0108	0
66	SLU 61	-0.01514	0.00501	0.03194	-0.002	-0.0112	0
66	SLU 62	-0.01514	0.00501	0.03194	-0.002	-0.0112	0
66	SLU 63	-0.01543	0.0051	0.03256	-0.0021	-0.0115	0
66	SLU 64	-0.01543	0.0051	0.03256	-0.0021	-0.0115	0
66	SLU 65	-0.01607	0.00517	0.03421	-0.0021	-0.0119	0
66	SLU 66	-0.01607	0.00517	0.03421	-0.0021	-0.0119	0
66	SLU 67	-0.01676	0.00587	0.03466	-0.0024	-0.0123	-0.0001
66	SLU 68	-0.01676	0.00587	0.03466	-0.0024	-0.0123	-0.0001
66	SLU 69	-0.0174	0.00593	0.03631	-0.0024	-0.0127	-0.0001
66	SLU 70	-0.01837	0.00603	0.03879	-0.0024	-0.0133	-0.0001
66	SLU 71	-0.01837	0.00603	0.03879	-0.0024	-0.0133	-0.0001
66	SLU 72	-0.01769	0.00603	0.03693	-0.0024	-0.0129	-0.0001
66	SLU 73	-0.01833	0.00609	0.03858	-0.0024	-0.0134	-0.0001
66	SLU 74	-0.0193	0.00619	0.04106	-0.0025	-0.014	-0.0001
66	SLU 75	-0.0193	0.00619	0.04106	-0.0025	-0.014	-0.0001
66	SLU 76	-0.01862	0.00619	0.0392	-0.0025	-0.0136	-0.0001
66	SLU 77	-0.01862	0.00619	0.0392	-0.0025	-0.0136	-0.0001
66	SLU 78	-0.01926	0.00625	0.04085	-0.0025	-0.0141	-0.0001
66	SLU 79	-0.01926	0.00625	0.04085	-0.0025	-0.0141	-0.0001
66	SLU 80	-0.0174	0.00604	0.03612	-0.0024	-0.0128	-0.0001
66	SLU 81	-0.01804	0.0061	0.03777	-0.0024	-0.0132	-0.0001
66	SLU 82	-0.01901	0.0062	0.04024	-0.0025	-0.0139	-0.0001
66	SLU 83	-0.01901	0.0062	0.04024	-0.0025	-0.0139	-0.0001
66	SLU 84	-0.01833	0.0062	0.03839	-0.0025	-0.0135	-0.0001
66	SLU 85	-0.01897	0.00626	0.04003	-0.0025	-0.0139	-0.0001
66	SLU 86	-0.01994	0.00636	0.04251	-0.0025	-0.0145	-0.0001
66	SLU 87	-0.01994	0.00636	0.04251	-0.0025	-0.0145	-0.0001
66	SLU 88	-0.01926	0.00636	0.04065	-0.0026	-0.0142	-0.0001
66	SLU 89	-0.01926	0.00636	0.04065	-0.0026	-0.0142	-0.0001
66	SLU 90	-0.01991	0.00642	0.0423	-0.0026	-0.0146	-0.0001
66	SLU 91	-0.01991	0.00642	0.0423	-0.0026	-0.0146	-0.0001

Nodo	Cont.	Spostamento			Rotazione		
Ind.	N.br.	ux	uy	uz	rx	ry	rz
66	SLU 92	-0.01836	0.0063	0.03829	-0.0025	-0.0136	-0.0001
66	SLU 93	-0.01836	0.0063	0.03829	-0.0025	-0.0136	-0.0001
66	SLU 94	-0.01901	0.00636	0.03994	-0.0026	-0.014	-0.0001
66	SLU 95	-0.01901	0.00636	0.03994	-0.0026	-0.014	-0.0001
66	SLU 96	-0.01929	0.00646	0.04056	-0.0026	-0.0143	-0.0001
66	SLU 97	-0.01929	0.00646	0.04056	-0.0026	-0.0143	-0.0001
66	SLU 98	-0.01994	0.00652	0.04221	-0.0026	-0.0147	-0.0001
66	SLU 99	-0.01994	0.00652	0.04221	-0.0026	-0.0147	-0.0001
66	SLU 100	-0.01676	0.00587	0.03466	-0.0024	-0.0123	-0.0001
66	SLU 101	-0.01676	0.00587	0.03466	-0.0024	-0.0123	-0.0001
66	SLU 102	-0.0174	0.00593	0.03631	-0.0024	-0.0127	-0.0001
66	SLU 103	-0.01837	0.00603	0.03879	-0.0024	-0.0133	-0.0001
66	SLU 104	-0.01837	0.00603	0.03879	-0.0024	-0.0133	-0.0001
66	SLU 105	-0.01769	0.00603	0.03693	-0.0024	-0.0129	-0.0001
66	SLU 106	-0.01833	0.00609	0.03858	-0.0024	-0.0134	-0.0001
66	SLU 107	-0.0193	0.00619	0.04106	-0.0025	-0.014	-0.0001
66	SLU 108	-0.0193	0.00619	0.04106	-0.0025	-0.014	-0.0001
66	SLU 109	-0.01862	0.00619	0.0392	-0.0025	-0.0136	-0.0001
66	SLU 110	-0.01862	0.00619	0.0392	-0.0025	-0.0136	-0.0001
66	SLU 111	-0.01926	0.00625	0.04085	-0.0025	-0.0141	-0.0001
66	SLU 112	-0.01926	0.00625	0.04085	-0.0025	-0.0141	-0.0001
66	SLU 113	-0.0174	0.00604	0.03612	-0.0024	-0.0128	-0.0001
66	SLU 114	-0.01804	0.0061	0.03777	-0.0024	-0.0132	-0.0001
66	SLU 115	-0.01901	0.0062	0.04024	-0.0025	-0.0139	-0.0001
66	SLU 116	-0.01901	0.0062	0.04024	-0.0025	-0.0139	-0.0001
66	SLU 117	-0.01833	0.0062	0.03839	-0.0025	-0.0135	-0.0001
66	SLU 118	-0.01897	0.00626	0.04003	-0.0025	-0.0139	-0.0001
66	SLU 119	-0.01994	0.00636	0.04251	-0.0025	-0.0145	-0.0001
66	SLU 120	-0.01994	0.00636	0.04251	-0.0025	-0.0145	-0.0001
66	SLU 121	-0.01926	0.00636	0.04065	-0.0026	-0.0142	-0.0001
66	SLU 122	-0.01926	0.00636	0.04065	-0.0026	-0.0142	-0.0001
66	SLU 123	-0.01991	0.00642	0.0423	-0.0026	-0.0146	-0.0001
66	SLU 124	-0.01991	0.00642	0.0423	-0.0026	-0.0146	-0.0001
66	SLU 125	-0.01836	0.0063	0.03829	-0.0025	-0.0136	-0.0001
66	SLU 126	-0.01836	0.0063	0.03829	-0.0025	-0.0136	-0.0001
66	SLU 127	-0.01901	0.00636	0.03994	-0.0026	-0.014	-0.0001
66	SLU 128	-0.01901	0.00636	0.03994	-0.0026	-0.014	-0.0001
66	SLU 129	-0.01929	0.00646	0.04056	-0.0026	-0.0143	-0.0001
66	SLU 130	-0.01929	0.00646	0.04056	-0.0026	-0.0143	-0.0001
66	SLU 131	-0.01994	0.00652	0.04221	-0.0026	-0.0147	-0.0001
66	SLU 132	-0.01994	0.00652	0.04221	-0.0026	-0.0147	-0.0001
66	SLE RA 1	-0.01289	0.00451	0.02667	-0.0018	-0.0094	0
66	SLE RA 2	-0.01289	0.00451	0.02667	-0.0018	-0.0094	0
66	SLE RA 3	-0.01332	0.00456	0.02776	-0.0018	-0.0097	0
66	SLE RA 4	-0.01396	0.00462	0.02941	-0.0018	-0.0101	0
66	SLE RA 5	-0.01396	0.00462	0.02941	-0.0018	-0.0101	0
66	SLE RA 6	-0.01351	0.00462	0.02818	-0.0019	-0.0099	0
66	SLE RA 7	-0.01394	0.00466	0.02928	-0.0019	-0.0102	0
66	SLE RA 8	-0.01458	0.00473	0.03093	-0.0019	-0.0106	0
66	SLE RA 9	-0.01458	0.00473	0.03093	-0.0019	-0.0106	0
66	SLE RA 10	-0.01413	0.00473	0.02969	-0.0019	-0.0103	0
66	SLE RA 11	-0.01413	0.00473	0.02969	-0.0019	-0.0103	0
66	SLE RA 12	-0.01456	0.00477	0.03079	-0.0019	-0.0106	0
66	SLE RA 13	-0.01456	0.00477	0.03079	-0.0019	-0.0106	0
66	SLE RA 14	-0.01332	0.00463	0.02763	-0.0019	-0.0098	0
66	SLE RA 15	-0.01375	0.00467	0.02873	-0.0019	-0.0101	0
66	SLE RA 16	-0.01439	0.00474	0.03038	-0.0019	-0.0105	0
66	SLE RA 17	-0.01439	0.00474	0.03038	-0.0019	-0.0105	0
66	SLE RA 18	-0.01394	0.00473	0.02915	-0.0019	-0.0102	0
66	SLE RA 19	-0.01437	0.00478	0.03024	-0.0019	-0.0105	0
66	SLE RA 20	-0.01501	0.00484	0.03189	-0.0019	-0.011	0
66	SLE RA 21	-0.01501	0.00484	0.03189	-0.0019	-0.011	0
66	SLE RA 22	-0.01456	0.00484	0.03066	-0.0019	-0.0107	0
66	SLE RA 23	-0.01456	0.00484	0.03066	-0.0019	-0.0107	0
66	SLE RA 24	-0.01499	0.00488	0.03176	-0.002	-0.011	0
66	SLE RA 25	-0.01499	0.00488	0.03176	-0.002	-0.011	0
66	SLE RA 26	-0.01396	0.0048	0.02909	-0.0019	-0.0103	0
66	SLE RA 27	-0.01396	0.0048	0.02909	-0.0019	-0.0103	0
66	SLE RA 28	-0.01439	0.00484	0.03018	-0.0019	-0.0106	0
66	SLE RA 29	-0.01439	0.00484	0.03018	-0.0019	-0.0106	0
66	SLE RA 30	-0.01458	0.00491	0.0306	-0.002	-0.0108	0
66	SLE RA 31	-0.01458	0.00491	0.0306	-0.002	-0.0108	0
66	SLE RA 32	-0.01501	0.00495	0.0317	-0.002	-0.0111	0
66	SLE RA 33	-0.01501	0.00495	0.0317	-0.002	-0.0111	0
66	SLE FR 1	-0.01289	0.00451	0.02667	-0.0018	-0.0094	0
66	SLE FR 2	-0.01289	0.00451	0.02667	-0.0018	-0.0094	0
66	SLE FR 3	-0.01332	0.00456	0.02776	-0.0018	-0.0097	0
66	SLE FR 4	-0.01314	0.00456	0.02727	-0.0018	-0.0096	0
66	SLE FR 5	-0.01332	0.00463	0.02763	-0.0019	-0.0098	0
66	SLE QP 1	-0.01289	0.00451	0.02667	-0.0018	-0.0094	0
66	SLO 1	-0.10209	0.00074	0.18688	-0.0338	-0.0024	-0.0013
66	SLO 2	-0.10209	0.00074	0.18688	-0.0338	-0.0024	-0.0013
66	SLO 3	-0.10208	0.00826	0.18687	0.0301	-0.0024	0.0012
66	SLO 4	-0.10208	0.00826	0.18687	0.0301	-0.0024	0.0012
66	SLO 5	-0.03965	-0.00802	0.07475	-0.1083	-0.0073	-0.0041
66	SLO 6	-0.03965	-0.00802	0.07475	-0.1083	-0.0073	-0.0041
66	SLO 7	-0.03964	0.01704	0.0747	0.1046	-0.0073	0.0041
66	SLO 8	-0.03964	0.01704	0.0747	0.1046	-0.0073	0.0041
66	SLO 9	0.01387	-0.00801	-0.02137	-0.1083	-0.0115	-0.0041
66	SLO 10	0.01387	-0.00801	-0.02137	-0.1083	-0.0115	-0.0041
66	SLO 11	0.01387	0.01705	-0.02142	0.1047	-0.0116	0.0041
66	SLO 12	0.01387	0.01705	-0.02142	0.1047	-0.0116	0.0041
66	SLO 13	0.07631	0.00077	-0.13353	-0.0337	-0.0164	-0.0013
66	SLO 14	0.07631	0.00077	-0.13353	-0.0337	-0.0164	-0.0013
66	SLO 15	0.07631	0.00829	-0.13355	0.0302	-0.0165	0.0012

Nodo	Cont.	Spostamento			Rotazione		
Ind.	N.br.	ux	uy	uz	rx	ry	rz
66	SLO 16	0.07631	0.00829	-0.13355	0.0302	-0.0165	0.0012
66	SLD 1	-0.08608	0.00103	0.15813	-0.0314	-0.0037	-0.0012
66	SLD 2	-0.08608	0.00103	0.15813	-0.0314	-0.0037	-0.0012
66	SLD 3	-0.08608	0.00798	0.15811	0.0276	-0.0037	0.0011
66	SLD 4	-0.08608	0.00798	0.15811	0.0276	-0.0037	0.0011
66	SLD 5	-0.03485	-0.00707	0.06612	-0.1002	-0.0077	-0.0038
66	SLD 6	-0.03485	-0.00707	0.06612	-0.1002	-0.0077	-0.0038
66	SLD 7	-0.03484	0.01609	0.06608	0.0965	-0.0077	0.0038
66	SLD 8	-0.03484	0.01609	0.06608	0.0965	-0.0077	0.0038
66	SLD 9	0.00906	-0.00706	-0.01275	-0.1002	-0.0111	-0.0038
66	SLD 10	0.00906	-0.00706	-0.01275	-0.1002	-0.0111	-0.0038
66	SLD 11	0.00907	0.0161	-0.01279	0.0966	-0.0112	0.0038
66	SLD 12	0.00907	0.0161	-0.01279	0.0966	-0.0112	0.0038
66	SLD 13	0.0603	0.00105	-0.10478	-0.0313	-0.0152	-0.0012
66	SLD 14	0.0603	0.00105	-0.10478	-0.0313	-0.0152	-0.0012
66	SLD 15	0.0603	0.008	-0.1048	0.0278	-0.0152	0.0011
66	SLD 16	0.0603	0.008	-0.1048	0.0278	-0.0152	0.0011
66	SLV 1	-0.1764	-0.00467	0.32035	-0.0798	0.0034	-0.003
66	SLV 2	-0.1764	-0.00467	0.32035	-0.0798	0.0034	-0.003
66	SLV 3	-0.17639	0.01365	0.32032	0.0759	0.0034	0.003
66	SLV 4	-0.17639	0.01365	0.32032	0.0759	0.0034	0.003
66	SLV 5	-0.06195	-0.02603	0.11483	-0.2613	-0.0055	-0.01
66	SLV 6	-0.06195	-0.02603	0.11483	-0.2613	-0.0055	-0.01
66	SLV 7	-0.06193	0.03505	0.11471	0.2576	-0.0056	0.01
66	SLV 8	-0.06193	0.03505	0.11471	0.2576	-0.0056	0.01
66	SLV 9	0.03615	-0.02602	-0.06138	-0.2612	-0.0132	-0.01
66	SLV 10	0.03615	-0.02602	-0.06138	-0.2612	-0.0132	-0.01
66	SLV 11	0.03617	0.03506	-0.06149	0.2577	-0.0133	0.01
66	SLV 12	0.03617	0.03506	-0.06149	0.2577	-0.0133	0.01
66	SLV 13	0.15061	-0.00463	-0.26699	-0.0795	-0.0223	-0.003
66	SLV 14	0.15061	-0.00463	-0.26699	-0.0795	-0.0223	-0.003
66	SLV 15	0.15062	0.0137	-0.26702	0.0761	-0.0223	0.003
66	SLV 16	0.15062	0.0137	-0.26702	0.0761	-0.0223	0.003
67	SLU 1	0.01289	0.00451	0.02667	-0.0018	0.0094	0
67	SLU 2	0.01289	0.00451	0.02667	-0.0018	0.0094	0
67	SLU 3	0.01353	0.00458	0.02831	-0.0018	0.0099	0
67	SLU 4	0.0145	0.00467	0.03079	-0.0019	0.0105	0
67	SLU 5	0.0145	0.00467	0.03079	-0.0019	0.0105	0
67	SLU 6	0.01397	0.00467	0.02921	-0.0019	0.0101	0
67	SLU 7	0.01462	0.00474	0.03086	-0.0019	0.0105	0
67	SLU 8	0.01558	0.00483	0.03333	-0.0019	0.0112	0
67	SLU 9	0.01558	0.00483	0.03333	-0.0019	0.0112	0
67	SLU 10	0.01506	0.00483	0.03175	-0.0019	0.0108	0
67	SLU 11	0.01506	0.00483	0.03175	-0.0019	0.0108	0
67	SLU 12	0.0157	0.00489	0.0334	-0.002	0.0112	0
67	SLU 13	0.0157	0.00489	0.0334	-0.002	0.0112	0
67	SLU 14	0.01378	0.00468	0.02857	-0.0019	0.0099	0
67	SLU 15	0.01443	0.00475	0.03022	-0.0019	0.0104	0
67	SLU 16	0.0154	0.00484	0.0327	-0.0019	0.011	0
67	SLU 17	0.0154	0.00484	0.0327	-0.0019	0.011	0
67	SLU 18	0.01487	0.00484	0.03112	-0.0019	0.0106	0
67	SLU 19	0.01551	0.00491	0.03277	-0.002	0.011	0
67	SLU 20	0.01648	0.005	0.03524	-0.002	0.0117	0
67	SLU 21	0.01648	0.005	0.03524	-0.002	0.0117	0
67	SLU 22	0.01595	0.005	0.03366	-0.002	0.0113	0
67	SLU 23	0.01595	0.005	0.03366	-0.002	0.0113	0
67	SLU 24	0.0166	0.00506	0.03531	-0.002	0.0117	0
67	SLU 25	0.0166	0.00506	0.03531	-0.002	0.0117	0
67	SLU 26	0.01513	0.00494	0.03144	-0.002	0.0107	0
67	SLU 27	0.01513	0.00494	0.03144	-0.002	0.0107	0
67	SLU 28	0.01577	0.005	0.03309	-0.002	0.0111	0
67	SLU 29	0.01577	0.005	0.03309	-0.002	0.0111	0
67	SLU 30	0.01621	0.0051	0.03398	-0.0021	0.0114	0
67	SLU 31	0.01621	0.0051	0.03398	-0.002	0.0114	0
67	SLU 32	0.01685	0.00516	0.03563	-0.0021	0.0118	0
67	SLU 33	0.01685	0.00516	0.03563	-0.0021	0.0118	0
67	SLU 34	0.01289	0.00451	0.02667	-0.0018	0.0094	0
67	SLU 35	0.01289	0.00451	0.02667	-0.0018	0.0094	0
67	SLU 36	0.01353	0.00458	0.02831	-0.0018	0.0099	0
67	SLU 37	0.0145	0.00467	0.03079	-0.0019	0.0105	0
67	SLU 38	0.0145	0.00467	0.03079	-0.0019	0.0105	0
67	SLU 39	0.01397	0.00467	0.02921	-0.0019	0.0101	0
67	SLU 40	0.01462	0.00474	0.03086	-0.0019	0.0105	0
67	SLU 41	0.01558	0.00483	0.03333	-0.0019	0.0112	0
67	SLU 42	0.01558	0.00483	0.03333	-0.0019	0.0112	0
67	SLU 43	0.01506	0.00483	0.03175	-0.0019	0.0108	0
67	SLU 44	0.01506	0.00483	0.03175	-0.0019	0.0108	0
67	SLU 45	0.0157	0.00489	0.0334	-0.002	0.0112	0
67	SLU 46	0.0157	0.00489	0.0334	-0.002	0.0112	0
67	SLU 47	0.01378	0.00468	0.02857	-0.0019	0.0099	0
67	SLU 48	0.01443	0.00475	0.03022	-0.0019	0.0104	0
67	SLU 49	0.0154	0.00484	0.0327	-0.0019	0.011	0
67	SLU 50	0.0154	0.00484	0.0327	-0.0019	0.011	0
67	SLU 51	0.01487	0.00484	0.03112	-0.0019	0.0106	0
67	SLU 52	0.01551	0.00491	0.03277	-0.002	0.011	0
67	SLU 53	0.01648	0.005	0.03524	-0.002	0.0117	0
67	SLU 54	0.01648	0.005	0.03524	-0.002	0.0117	0
67	SLU 55	0.01595	0.005	0.03366	-0.002	0.0113	0
67	SLU 56	0.01595	0.005	0.03366	-0.002	0.0113	0
67	SLU 57	0.0166	0.00506	0.03531	-0.002	0.0117	0
67	SLU 58	0.0166	0.00506	0.03531	-0.002	0.0117	0
67	SLU 59	0.01513	0.00494	0.03144	-0.002	0.0107	0
67	SLU 60	0.01513	0.00494	0.03144	-0.002	0.0107	0
67	SLU 61	0.01577	0.005	0.03309	-0.002	0.0111	0
67	SLU 62	0.01577	0.005	0.03309	-0.002	0.0111	0

Nodo	Cont.	Spostamento			Rotazione		
Ind.	N.br.	ux	uy	uz	rx	ry	rz
67	SLU 63	0.01621	0.0051	0.03398	-0.0021	0.0114	0
67	SLU 64	0.01621	0.0051	0.03398	-0.002	0.0114	0
67	SLU 65	0.01685	0.00516	0.03563	-0.0021	0.0118	0
67	SLU 66	0.01685	0.00516	0.03563	-0.0021	0.0118	0
67	SLU 67	0.01676	0.00587	0.03466	-0.0024	0.0123	0.0001
67	SLU 68	0.01676	0.00587	0.03466	-0.0024	0.0123	0.0001
67	SLU 69	0.0174	0.00593	0.03631	-0.0024	0.0127	0.0001
67	SLU 70	0.01837	0.00603	0.03879	-0.0024	0.0133	0.0001
67	SLU 71	0.01837	0.00603	0.03879	-0.0024	0.0133	0.0001
67	SLU 72	0.01784	0.00603	0.03721	-0.0024	0.0129	0.0001
67	SLU 73	0.01848	0.00609	0.03886	-0.0024	0.0134	0.0001
67	SLU 74	0.01945	0.00619	0.04133	-0.0025	0.014	0.0001
67	SLU 75	0.01945	0.00619	0.04133	-0.0025	0.014	0.0001
67	SLU 76	0.01892	0.00618	0.03975	-0.0025	0.0136	0.0001
67	SLU 77	0.01892	0.00618	0.03975	-0.0025	0.0136	0.0001
67	SLU 78	0.01957	0.00625	0.0414	-0.0025	0.014	0.0001
67	SLU 79	0.01957	0.00625	0.0414	-0.0025	0.014	0.0001
67	SLU 80	0.01765	0.00604	0.03657	-0.0024	0.0128	0.0001
67	SLU 81	0.0183	0.0061	0.03822	-0.0024	0.0132	0.0001
67	SLU 82	0.01926	0.0062	0.0407	-0.0025	0.0138	0.0001
67	SLU 83	0.01926	0.0062	0.0407	-0.0025	0.0138	0.0001
67	SLU 84	0.01873	0.0062	0.03912	-0.0025	0.0134	0.0001
67	SLU 85	0.01938	0.00626	0.04077	-0.0025	0.0139	0.0001
67	SLU 86	0.02035	0.00636	0.04324	-0.0025	0.0145	0.0001
67	SLU 87	0.02035	0.00636	0.04324	-0.0025	0.0145	0.0001
67	SLU 88	0.01982	0.00635	0.04166	-0.0025	0.0141	0.0001
67	SLU 89	0.01982	0.00635	0.04166	-0.0025	0.0141	0.0001
67	SLU 90	0.02046	0.00642	0.04331	-0.0026	0.0145	0.0001
67	SLU 91	0.02046	0.00642	0.04331	-0.0026	0.0145	0.0001
67	SLU 92	0.01899	0.00629	0.03944	-0.0025	0.0136	0.0001
67	SLU 93	0.01899	0.00629	0.03944	-0.0025	0.0136	0.0001
67	SLU 94	0.01964	0.00636	0.04109	-0.0026	0.014	0.0001
67	SLU 95	0.01964	0.00636	0.04109	-0.0026	0.014	0.0001
67	SLU 96	0.02008	0.00645	0.04198	-0.0026	0.0142	0.0001
67	SLU 97	0.02008	0.00645	0.04198	-0.0026	0.0142	0.0001
67	SLU 98	0.02072	0.00652	0.04363	-0.0026	0.0146	0.0001
67	SLU 99	0.02072	0.00652	0.04363	-0.0026	0.0146	0.0001
67	SLU 100	0.01676	0.00587	0.03466	-0.0024	0.0123	0.0001
67	SLU 101	0.01676	0.00587	0.03466	-0.0024	0.0123	0.0001
67	SLU 102	0.0174	0.00593	0.03631	-0.0024	0.0127	0.0001
67	SLU 103	0.01837	0.00603	0.03879	-0.0024	0.0133	0.0001
67	SLU 104	0.01837	0.00603	0.03879	-0.0024	0.0133	0.0001
67	SLU 105	0.01784	0.00603	0.03721	-0.0024	0.0129	0.0001
67	SLU 106	0.01848	0.00609	0.03886	-0.0024	0.0134	0.0001
67	SLU 107	0.01945	0.00619	0.04133	-0.0025	0.014	0.0001
67	SLU 108	0.01945	0.00619	0.04133	-0.0025	0.014	0.0001
67	SLU 109	0.01892	0.00618	0.03975	-0.0025	0.0136	0.0001
67	SLU 110	0.01892	0.00618	0.03975	-0.0025	0.0136	0.0001
67	SLU 111	0.01957	0.00625	0.0414	-0.0025	0.014	0.0001
67	SLU 112	0.01957	0.00625	0.0414	-0.0025	0.014	0.0001
67	SLU 113	0.01765	0.00604	0.03657	-0.0024	0.0128	0.0001
67	SLU 114	0.0183	0.0061	0.03822	-0.0024	0.0132	0.0001
67	SLU 115	0.01926	0.0062	0.0407	-0.0025	0.0138	0.0001
67	SLU 116	0.01926	0.0062	0.0407	-0.0025	0.0138	0.0001
67	SLU 117	0.01873	0.0062	0.03912	-0.0025	0.0134	0.0001
67	SLU 118	0.01938	0.00626	0.04077	-0.0025	0.0139	0.0001
67	SLU 119	0.02035	0.00636	0.04324	-0.0025	0.0145	0.0001
67	SLU 120	0.02035	0.00636	0.04324	-0.0025	0.0145	0.0001
67	SLU 121	0.01982	0.00635	0.04166	-0.0025	0.0141	0.0001
67	SLU 122	0.01982	0.00635	0.04166	-0.0025	0.0141	0.0001
67	SLU 123	0.02046	0.00642	0.04331	-0.0026	0.0145	0.0001
67	SLU 124	0.02046	0.00642	0.04331	-0.0026	0.0145	0.0001
67	SLU 125	0.01899	0.00629	0.03944	-0.0025	0.0136	0.0001
67	SLU 126	0.01899	0.00629	0.03944	-0.0025	0.0136	0.0001
67	SLU 127	0.01964	0.00636	0.04109	-0.0026	0.014	0.0001
67	SLU 128	0.01964	0.00636	0.04109	-0.0026	0.014	0.0001
67	SLU 129	0.02008	0.00645	0.04198	-0.0026	0.0142	0.0001
67	SLU 130	0.02008	0.00645	0.04198	-0.0026	0.0142	0.0001
67	SLU 131	0.02072	0.00652	0.04363	-0.0026	0.0146	0.0001
67	SLU 132	0.02072	0.00652	0.04363	-0.0026	0.0146	0.0001
67	SLE RA 1	0.01289	0.00451	0.02667	-0.0018	0.0094	0
67	SLE RA 2	0.01289	0.00451	0.02667	-0.0018	0.0094	0
67	SLE RA 3	0.01332	0.00456	0.02776	-0.0018	0.0097	0
67	SLE RA 4	0.01396	0.00462	0.02941	-0.0018	0.0101	0
67	SLE RA 5	0.01396	0.00462	0.02941	-0.0018	0.0101	0
67	SLE RA 6	0.01361	0.00462	0.02836	-0.0019	0.0099	0
67	SLE RA 7	0.01404	0.00466	0.02946	-0.0019	0.0102	0
67	SLE RA 8	0.01469	0.00473	0.03111	-0.0019	0.0106	0
67	SLE RA 9	0.01469	0.00473	0.03111	-0.0019	0.0106	0
67	SLE RA 10	0.01433	0.00472	0.03006	-0.0019	0.0103	0
67	SLE RA 11	0.01433	0.00472	0.03006	-0.0019	0.0103	0
67	SLE RA 12	0.01476	0.00477	0.03116	-0.0019	0.0106	0
67	SLE RA 13	0.01476	0.00477	0.03116	-0.0019	0.0106	0
67	SLE RA 14	0.01349	0.00463	0.02794	-0.0019	0.0098	0
67	SLE RA 15	0.01392	0.00467	0.02904	-0.0019	0.0101	0
67	SLE RA 16	0.01456	0.00473	0.03069	-0.0019	0.0105	0
67	SLE RA 17	0.01456	0.00473	0.03069	-0.0019	0.0105	0
67	SLE RA 18	0.01421	0.00473	0.02963	-0.0019	0.0102	0
67	SLE RA 19	0.01464	0.00478	0.03073	-0.0019	0.0105	0
67	SLE RA 20	0.01528	0.00484	0.03238	-0.0019	0.0109	0
67	SLE RA 21	0.01528	0.00484	0.03238	-0.0019	0.0109	0
67	SLE RA 22	0.01493	0.00484	0.03133	-0.0019	0.0107	0
67	SLE RA 23	0.01493	0.00484	0.03133	-0.0019	0.0107	0
67	SLE RA 24	0.01536	0.00488	0.03243	-0.002	0.011	0
67	SLE RA 25	0.01536	0.00488	0.03243	-0.002	0.011	0

Nodo	Cont.	Spostamento			Rotazione		
Ind.	N.br.	ux	uy	uz	rx	ry	rz
67	SLE RA 26	0.01438	0.0048	0.02985	-0.0019	0.0103	0
67	SLE RA 27	0.01438	0.0048	0.02985	-0.0019	0.0103	0
67	SLE RA 28	0.01481	0.00484	0.03095	-0.0019	0.0106	0
67	SLE RA 29	0.01481	0.00484	0.03095	-0.0019	0.0106	0
67	SLE RA 30	0.0151	0.0049	0.03154	-0.002	0.0107	0
67	SLE RA 31	0.0151	0.0049	0.03154	-0.002	0.0107	0
67	SLE RA 32	0.01553	0.00495	0.03264	-0.002	0.011	0
67	SLE RA 33	0.01553	0.00495	0.03264	-0.002	0.011	0
67	SLE FR 1	0.01289	0.00451	0.02667	-0.0018	0.0094	0
67	SLE FR 2	0.01289	0.00451	0.02667	-0.0018	0.0094	0
67	SLE FR 3	0.01332	0.00456	0.02776	-0.0018	0.0097	0
67	SLE FR 4	0.01318	0.00456	0.02734	-0.0018	0.0096	0
67	SLE FR 5	0.01349	0.00463	0.02794	-0.0019	0.0098	0
67	SLE QP 1	0.01289	0.00451	0.02667	-0.0018	0.0094	0
67	SLO 1	-0.07631	0.00077	-0.13353	-0.0337	0.0164	0.0013
67	SLO 2	-0.07631	0.00077	-0.13353	-0.0337	0.0164	0.0013
67	SLO 3	-0.07631	0.00829	-0.13355	0.0302	0.0165	-0.0012
67	SLO 4	-0.07631	0.00829	-0.13355	0.0302	0.0165	-0.0012
67	SLO 5	-0.01387	-0.00801	-0.02137	-0.1083	0.0115	0.0041
67	SLO 6	-0.01387	-0.00801	-0.02137	-0.1083	0.0115	0.0041
67	SLO 7	-0.01387	0.01705	-0.02142	0.1047	0.0116	-0.0041
67	SLO 8	-0.01387	0.01705	-0.02142	0.1047	0.0116	-0.0041
67	SLO 9	0.03965	-0.00802	0.07475	-0.1083	0.0073	0.0041
67	SLO 10	0.03965	-0.00802	0.07475	-0.1083	0.0073	0.0041
67	SLO 11	0.03964	0.01704	0.0747	0.1046	0.0073	-0.0041
67	SLO 12	0.03964	0.01704	0.0747	0.1046	0.0073	-0.0041
67	SLO 13	0.10209	0.00074	0.18688	-0.0338	0.0024	0.0013
67	SLO 14	0.10209	0.00074	0.18688	-0.0338	0.0024	0.0013
67	SLO 15	0.10208	0.00826	0.18687	0.0301	0.0024	-0.0012
67	SLO 16	0.10208	0.00826	0.18687	0.0301	0.0024	-0.0012
67	SLD 1	-0.0603	0.00105	-0.10478	-0.0313	0.0152	0.0012
67	SLD 2	-0.0603	0.00105	-0.10478	-0.0313	0.0152	0.0012
67	SLD 3	-0.0603	0.008	-0.1048	0.0278	0.0152	-0.0011
67	SLD 4	-0.0603	0.008	-0.1048	0.0278	0.0152	-0.0011
67	SLD 5	-0.00906	-0.00706	-0.01275	-0.1002	0.0111	0.0038
67	SLD 6	-0.00906	-0.00706	-0.01275	-0.1002	0.0111	0.0038
67	SLD 7	-0.00907	0.0161	-0.01279	0.0966	0.0112	-0.0038
67	SLD 8	-0.00907	0.0161	-0.01279	0.0966	0.0112	-0.0038
67	SLD 9	0.03485	-0.00707	0.06612	-0.1002	0.0077	0.0038
67	SLD 10	0.03485	-0.00707	0.06612	-0.1002	0.0077	0.0038
67	SLD 11	0.03484	0.01609	0.06608	0.0965	0.0077	-0.0038
67	SLD 12	0.03484	0.01609	0.06608	0.0965	0.0077	-0.0038
67	SLD 13	0.08608	0.00103	0.15813	-0.0314	0.0037	0.0012
67	SLD 14	0.08608	0.00103	0.15813	-0.0314	0.0037	0.0012
67	SLD 15	0.08608	0.00798	0.15811	0.0276	0.0037	-0.0011
67	SLD 16	0.08608	0.00798	0.15811	0.0276	0.0037	-0.0011
67	SLV 1	-0.15061	-0.00463	-0.26699	-0.0795	0.0223	0.003
67	SLV 2	-0.15061	-0.00463	-0.26699	-0.0795	0.0223	0.003
67	SLV 3	-0.15062	0.0137	-0.26702	0.0761	0.0223	-0.003
67	SLV 4	-0.15062	0.0137	-0.26702	0.0761	0.0223	-0.003
67	SLV 5	-0.03615	-0.02602	-0.06138	-0.2612	0.0132	0.01
67	SLV 6	-0.03615	-0.02602	-0.06138	-0.2612	0.0132	0.01
67	SLV 7	-0.03617	0.03506	-0.06149	0.2577	0.0133	-0.01
67	SLV 8	-0.03617	0.03506	-0.06149	0.2577	0.0133	-0.01
67	SLV 9	0.06195	-0.02603	0.11483	-0.2613	0.0055	0.01
67	SLV 10	0.06195	-0.02603	0.11483	-0.2613	0.0055	0.01
67	SLV 11	0.06193	0.03505	0.11471	0.2576	0.0056	-0.01
67	SLV 12	0.06193	0.03505	0.11471	0.2576	0.0056	-0.01
67	SLV 13	0.1764	-0.00467	0.32035	-0.0798	-0.0034	0.003
67	SLV 14	0.1764	-0.00467	0.32035	-0.0798	-0.0034	0.003
67	SLV 15	0.17639	0.01365	0.32032	0.0759	-0.0034	-0.003
67	SLV 16	0.17639	0.01365	0.32032	0.0759	-0.0034	-0.003
68	SLU 1	0.02394	0.00462	-0.0096	-0.0072	0.0101	0.0111
68	SLU 2	0.02394	0.00462	-0.0096	-0.0072	0.0101	0.0111
68	SLU 3	0.02498	0.00468	-0.00944	-0.0073	0.0106	0.0113
68	SLU 4	0.02655	0.00478	-0.00919	-0.0074	0.0113	0.0115
68	SLU 5	0.02655	0.00478	-0.00919	-0.0074	0.0113	0.0115
68	SLU 6	0.02574	0.00478	-0.00953	-0.0075	0.0108	0.0115
68	SLU 7	0.02679	0.00484	-0.00936	-0.0076	0.0113	0.0116
68	SLU 8	0.02835	0.00494	-0.00912	-0.0077	0.012	0.0119
68	SLU 9	0.02835	0.00494	-0.00912	-0.0077	0.012	0.0119
68	SLU 10	0.02755	0.00494	-0.00945	-0.0077	0.0115	0.0119
68	SLU 11	0.02755	0.00494	-0.00945	-0.0077	0.0115	0.0119
68	SLU 12	0.02859	0.005	-0.00928	-0.0078	0.012	0.012
68	SLU 13	0.02859	0.005	-0.00928	-0.0078	0.012	0.012
68	SLU 14	0.02547	0.00479	-0.0097	-0.0076	0.0106	0.0117
68	SLU 15	0.02651	0.00486	-0.00954	-0.0076	0.0111	0.0119
68	SLU 16	0.02808	0.00496	-0.00929	-0.0078	0.0118	0.0121
68	SLU 17	0.02808	0.00496	-0.00929	-0.0078	0.0118	0.0121
68	SLU 18	0.02728	0.00495	-0.00963	-0.0078	0.0114	0.0121
68	SLU 19	0.02832	0.00502	-0.00946	-0.0079	0.0118	0.0122
68	SLU 20	0.02989	0.00512	-0.00922	-0.008	0.0126	0.0125
68	SLU 21	0.02989	0.00512	-0.00922	-0.008	0.0126	0.0125
68	SLU 22	0.02908	0.00511	-0.00955	-0.0081	0.0121	0.0125
68	SLU 23	0.02908	0.00511	-0.00955	-0.0081	0.0121	0.0125
68	SLU 24	0.03012	0.00518	-0.00938	-0.0082	0.0126	0.0126
68	SLU 25	0.03012	0.00518	-0.00938	-0.0082	0.0126	0.0126
68	SLU 26	0.02777	0.00506	-0.00985	-0.0081	0.0114	0.0126
68	SLU 27	0.02777	0.00506	-0.00985	-0.0081	0.0114	0.0126
68	SLU 28	0.02881	0.00512	-0.00969	-0.0082	0.0119	0.0127
68	SLU 29	0.02881	0.00512	-0.00969	-0.0082	0.0119	0.0127
68	SLU 30	0.02957	0.00522	-0.00977	-0.0083	0.0122	0.013
68	SLU 31	0.02957	0.00522	-0.00977	-0.0083	0.0122	0.013
68	SLU 32	0.03062	0.00528	-0.00961	-0.0084	0.0127	0.0131
68	SLU 33	0.03062	0.00528	-0.00961	-0.0084	0.0127	0.0131

Nodo	Cont.	Spostamento			Rotazione		
Ind.	N.br.	ux	uy	uz	rx	ry	rz
68	SLU 34	0.02394	0.00462	-0.0096	-0.0072	0.0101	0.0111
68	SLU 35	0.02394	0.00462	-0.0096	-0.0072	0.0101	0.0111
68	SLU 36	0.02498	0.00468	-0.00944	-0.0073	0.0106	0.0113
68	SLU 37	0.02655	0.00478	-0.00919	-0.0074	0.0113	0.0115
68	SLU 38	0.02655	0.00478	-0.00919	-0.0074	0.0113	0.0115
68	SLU 39	0.02574	0.00478	-0.00953	-0.0075	0.0108	0.0115
68	SLU 40	0.02679	0.00484	-0.00936	-0.0076	0.0113	0.0116
68	SLU 41	0.02835	0.00494	-0.00912	-0.0077	0.012	0.0119
68	SLU 42	0.02835	0.00494	-0.00912	-0.0077	0.012	0.0119
68	SLU 43	0.02755	0.00494	-0.00945	-0.0077	0.0115	0.0119
68	SLU 44	0.02755	0.00494	-0.00945	-0.0077	0.0115	0.0119
68	SLU 45	0.02859	0.005	-0.00928	-0.0078	0.012	0.012
68	SLU 46	0.02859	0.005	-0.00928	-0.0078	0.012	0.012
68	SLU 47	0.02547	0.00479	-0.0097	-0.0076	0.0106	0.0117
68	SLU 48	0.02651	0.00486	-0.00954	-0.0076	0.0111	0.0119
68	SLU 49	0.02808	0.00496	-0.00929	-0.0078	0.0118	0.0121
68	SLU 50	0.02808	0.00496	-0.00929	-0.0078	0.0118	0.0121
68	SLU 51	0.02728	0.00495	-0.00963	-0.0078	0.0114	0.0121
68	SLU 52	0.02832	0.00502	-0.00946	-0.0079	0.0118	0.0122
68	SLU 53	0.02989	0.00512	-0.00922	-0.008	0.0126	0.0125
68	SLU 54	0.02989	0.00512	-0.00922	-0.008	0.0126	0.0125
68	SLU 55	0.02908	0.00511	-0.00955	-0.0081	0.0121	0.0125
68	SLU 56	0.02908	0.00511	-0.00955	-0.0081	0.0121	0.0125
68	SLU 57	0.03012	0.00518	-0.00938	-0.0082	0.0126	0.0126
68	SLU 58	0.03012	0.00518	-0.00938	-0.0082	0.0126	0.0126
68	SLU 59	0.02777	0.00506	-0.00985	-0.0081	0.0114	0.0126
68	SLU 60	0.02777	0.00506	-0.00985	-0.0081	0.0114	0.0126
68	SLU 61	0.02881	0.00512	-0.00969	-0.0082	0.0119	0.0127
68	SLU 62	0.02881	0.00512	-0.00969	-0.0082	0.0119	0.0127
68	SLU 63	0.02957	0.00522	-0.00977	-0.0083	0.0122	0.013
68	SLU 64	0.02957	0.00522	-0.00977	-0.0083	0.0122	0.013
68	SLU 65	0.03062	0.00528	-0.00961	-0.0084	0.0127	0.0131
68	SLU 66	0.03062	0.00528	-0.00961	-0.0084	0.0127	0.0131
68	SLU 67	0.03112	0.006	-0.01249	-0.0094	0.0131	0.0144
68	SLU 68	0.03112	0.006	-0.01249	-0.0094	0.0131	0.0144
68	SLU 69	0.03216	0.00607	-0.01232	-0.0095	0.0136	0.0146
68	SLU 70	0.03373	0.00617	-0.01208	-0.0096	0.0143	0.0148
68	SLU 71	0.03373	0.00617	-0.01208	-0.0096	0.0143	0.0148
68	SLU 72	0.03292	0.00616	-0.01241	-0.0096	0.0138	0.0148
68	SLU 73	0.03397	0.00623	-0.01224	-0.0097	0.0143	0.015
68	SLU 74	0.03553	0.00633	-0.012	-0.0099	0.015	0.0152
68	SLU 75	0.03553	0.00633	-0.012	-0.0099	0.015	0.0152
68	SLU 76	0.03473	0.00632	-0.01233	-0.0099	0.0146	0.0152
68	SLU 77	0.03473	0.00632	-0.01233	-0.0099	0.0146	0.0152
68	SLU 78	0.03577	0.00639	-0.01216	-0.01	0.015	0.0154
68	SLU 79	0.03577	0.00639	-0.01216	-0.01	0.015	0.0154
68	SLU 80	0.03265	0.00618	-0.01259	-0.0097	0.0136	0.015
68	SLU 81	0.0337	0.00624	-0.01242	-0.0098	0.0141	0.0152
68	SLU 82	0.03526	0.00634	-0.01218	-0.01	0.0148	0.0154
68	SLU 83	0.03526	0.00634	-0.01218	-0.01	0.0148	0.0154
68	SLU 84	0.03446	0.00634	-0.01251	-0.01	0.0144	0.0154
68	SLU 85	0.0355	0.0064	-0.01234	-0.0101	0.0149	0.0156
68	SLU 86	0.03707	0.0065	-0.0121	-0.0102	0.0156	0.0158
68	SLU 87	0.03707	0.0065	-0.0121	-0.0102	0.0156	0.0158
68	SLU 88	0.03626	0.0065	-0.01243	-0.0102	0.0151	0.0158
68	SLU 89	0.03626	0.0065	-0.01243	-0.0102	0.0151	0.0158
68	SLU 90	0.03731	0.00656	-0.01226	-0.0103	0.0156	0.016
68	SLU 91	0.03731	0.00657	-0.01226	-0.0103	0.0156	0.016
68	SLU 92	0.03495	0.00644	-0.01273	-0.0102	0.0145	0.0159
68	SLU 93	0.03495	0.00644	-0.01273	-0.0102	0.0145	0.0159
68	SLU 94	0.036	0.00651	-0.01257	-0.0103	0.0149	0.0161
68	SLU 95	0.036	0.00651	-0.01257	-0.0103	0.0149	0.0161
68	SLU 96	0.03676	0.0066	-0.01266	-0.0105	0.0152	0.0163
68	SLU 97	0.03676	0.0066	-0.01266	-0.0105	0.0152	0.0163
68	SLU 98	0.0378	0.00667	-0.01249	-0.0106	0.0157	0.0165
68	SLU 99	0.0378	0.00667	-0.01249	-0.0106	0.0157	0.0165
68	SLU 100	0.03112	0.006	-0.01249	-0.0094	0.0131	0.0144
68	SLU 101	0.03112	0.006	-0.01249	-0.0094	0.0131	0.0144
68	SLU 102	0.03216	0.00607	-0.01232	-0.0095	0.0136	0.0146
68	SLU 103	0.03373	0.00617	-0.01208	-0.0096	0.0143	0.0148
68	SLU 104	0.03373	0.00617	-0.01208	-0.0096	0.0143	0.0148
68	SLU 105	0.03292	0.00616	-0.01241	-0.0096	0.0138	0.0148
68	SLU 106	0.03397	0.00623	-0.01224	-0.0097	0.0143	0.015
68	SLU 107	0.03553	0.00633	-0.012	-0.0099	0.015	0.0152
68	SLU 108	0.03553	0.00633	-0.012	-0.0099	0.015	0.0152
68	SLU 109	0.03473	0.00632	-0.01233	-0.0099	0.0146	0.0152
68	SLU 110	0.03473	0.00632	-0.01233	-0.0099	0.0146	0.0152
68	SLU 111	0.03577	0.00639	-0.01216	-0.01	0.015	0.0154
68	SLU 112	0.03577	0.00639	-0.01216	-0.01	0.015	0.0154
68	SLU 113	0.03265	0.00618	-0.01259	-0.0097	0.0136	0.015
68	SLU 114	0.0337	0.00624	-0.01242	-0.0098	0.0141	0.0152
68	SLU 115	0.03526	0.00634	-0.01218	-0.01	0.0148	0.0154
68	SLU 116	0.03526	0.00634	-0.01218	-0.01	0.0148	0.0154
68	SLU 117	0.03446	0.00634	-0.01251	-0.01	0.0144	0.0154
68	SLU 118	0.0355	0.0064	-0.01234	-0.0101	0.0149	0.0156
68	SLU 119	0.03707	0.0065	-0.0121	-0.0102	0.0156	0.0158
68	SLU 120	0.03707	0.0065	-0.0121	-0.0102	0.0156	0.0158
68	SLU 121	0.03626	0.0065	-0.01243	-0.0102	0.0151	0.0158
68	SLU 122	0.03626	0.0065	-0.01243	-0.0102	0.0151	0.0158
68	SLU 123	0.03731	0.00656	-0.01226	-0.0103	0.0156	0.016
68	SLU 124	0.03731	0.00657	-0.01226	-0.0103	0.0156	0.016
68	SLU 125	0.03495	0.00644	-0.01273	-0.0102	0.0145	0.0159
68	SLU 126	0.03495	0.00644	-0.01273	-0.0102	0.0145	0.0159
68	SLU 127	0.036	0.00651	-0.01257	-0.0103	0.0149	0.0161
68	SLU 128	0.036	0.00651	-0.01257	-0.0103	0.0149	0.0161

Nodo	Cont.	Spostamento			Rotazione		
Ind.	N.br.	ux	uy	uz	rx	ry	rz
68	SLU 129	0.03676	0.0066	-0.01266	-0.0105	0.0152	0.0163
68	SLU 130	0.03676	0.0066	-0.01266	-0.0105	0.0152	0.0163
68	SLU 131	0.0378	0.00667	-0.01249	-0.0106	0.0157	0.0165
68	SLU 132	0.0378	0.00667	-0.01249	-0.0106	0.0157	0.0165
68	SLE RA 1	0.02394	0.00462	-0.0096	-0.0072	0.0101	0.0111
68	SLE RA 2	0.02394	0.00462	-0.0096	-0.0072	0.0101	0.0111
68	SLE RA 3	0.02463	0.00466	-0.0095	-0.0073	0.0104	0.0112
68	SLE RA 4	0.02568	0.00473	-0.00933	-0.0074	0.0109	0.0113
68	SLE RA 5	0.02568	0.00473	-0.00933	-0.0074	0.0109	0.0113
68	SLE RA 6	0.02514	0.00473	-0.00955	-0.0074	0.0106	0.0114
68	SLE RA 7	0.02584	0.00477	-0.00944	-0.0074	0.0109	0.0115
68	SLE RA 8	0.02688	0.00483	-0.00928	-0.0075	0.0114	0.0116
68	SLE RA 9	0.02688	0.00483	-0.00928	-0.0075	0.0114	0.0116
68	SLE RA 10	0.02634	0.00483	-0.0095	-0.0075	0.0111	0.0116
68	SLE RA 11	0.02634	0.00483	-0.0095	-0.0075	0.0111	0.0116
68	SLE RA 12	0.02704	0.00488	-0.00939	-0.0076	0.0114	0.0117
68	SLE RA 13	0.02704	0.00488	-0.00939	-0.0076	0.0114	0.0117
68	SLE RA 14	0.02496	0.00473	-0.00967	-0.0074	0.0104	0.0115
68	SLE RA 15	0.02566	0.00478	-0.00956	-0.0075	0.0108	0.0116
68	SLE RA 16	0.0267	0.00484	-0.0094	-0.0076	0.0112	0.0117
68	SLE RA 17	0.0267	0.00484	-0.0094	-0.0076	0.0112	0.0117
68	SLE RA 18	0.02616	0.00484	-0.00962	-0.0076	0.0109	0.0118
68	SLE RA 19	0.02686	0.00489	-0.00951	-0.0077	0.0112	0.0119
68	SLE RA 20	0.0279	0.00495	-0.00935	-0.0078	0.0117	0.012
68	SLE RA 21	0.0279	0.00495	-0.00935	-0.0078	0.0117	0.012
68	SLE RA 22	0.02737	0.00495	-0.00957	-0.0078	0.0114	0.012
68	SLE RA 23	0.02737	0.00495	-0.00957	-0.0078	0.0114	0.012
68	SLE RA 24	0.02806	0.00499	-0.00946	-0.0078	0.0117	0.0121
68	SLE RA 25	0.02806	0.00499	-0.00946	-0.0078	0.0117	0.0121
68	SLE RA 26	0.02649	0.00491	-0.00977	-0.0078	0.011	0.0121
68	SLE RA 27	0.02649	0.00491	-0.00977	-0.0078	0.011	0.0121
68	SLE RA 28	0.02719	0.00495	-0.00966	-0.0078	0.0113	0.0122
68	SLE RA 29	0.02719	0.00495	-0.00966	-0.0078	0.0113	0.0122
68	SLE RA 30	0.0277	0.00502	-0.00972	-0.0079	0.0115	0.0124
68	SLE RA 31	0.0277	0.00502	-0.00972	-0.0079	0.0115	0.0124
68	SLE RA 32	0.02839	0.00506	-0.00961	-0.008	0.0118	0.0125
68	SLE RA 33	0.02839	0.00506	-0.00961	-0.008	0.0118	0.0125
68	SLE FR 1	0.02394	0.00462	-0.0096	-0.0072	0.0101	0.0111
68	SLE FR 2	0.02394	0.00462	-0.0096	-0.0072	0.0101	0.0111
68	SLE FR 3	0.02463	0.00466	-0.0095	-0.0073	0.0104	0.0112
68	SLE FR 4	0.02442	0.00466	-0.00958	-0.0073	0.0103	0.0112
68	SLE FR 5	0.02496	0.00473	-0.00967	-0.0074	0.0104	0.0115
68	SLE QP 1	0.02394	0.00462	-0.0096	-0.0072	0.0101	0.0111
68	SLO 1	-0.06783	0.00443	-0.04867	-0.1168	-0.0391	0.2735
68	SLO 2	-0.06783	0.00443	-0.04867	-0.1168	-0.0391	0.2735
68	SLO 3	-0.06783	0.00485	-0.04872	0.1024	-0.0391	-0.2512
68	SLO 4	-0.06783	0.00485	-0.04872	0.1024	-0.0391	-0.2512
68	SLO 5	-0.00359	0.00393	-0.02123	-0.3726	-0.0047	0.8858
68	SLO 6	-0.00359	0.00393	-0.02123	-0.3726	-0.0047	0.8858
68	SLO 7	-0.00359	0.00532	-0.02143	0.3582	-0.0047	-0.8635
68	SLO 8	-0.00359	0.00532	-0.02143	0.3582	-0.0047	-0.8635
68	SLO 9	0.05147	0.00392	0.00222	-0.3726	0.0248	0.8857
68	SLO 10	0.05147	0.00392	0.00222	-0.3726	0.0248	0.8857
68	SLO 11	0.05147	0.0053	0.00203	0.3582	0.0248	-0.8636
68	SLO 12	0.05147	0.0053	0.00203	0.3582	0.0248	-0.8636
68	SLO 13	0.11571	0.00439	0.02952	-0.1168	0.0593	0.2735
68	SLO 14	0.11571	0.00439	0.02952	-0.1168	0.0593	0.2735
68	SLO 15	0.11571	0.0048	0.02946	0.1024	0.0593	-0.2513
68	SLO 16	0.11571	0.0048	0.02946	0.1024	0.0593	-0.2513
68	SLD 1	-0.05136	0.00444	-0.04165	-0.1085	-0.0303	0.2536
68	SLD 2	-0.05136	0.00444	-0.04165	-0.1085	-0.0303	0.2536
68	SLD 3	-0.05136	0.00483	-0.04171	0.0941	-0.0303	-0.2313
68	SLD 4	-0.05136	0.00483	-0.04171	0.0941	-0.0303	-0.2313
68	SLD 5	0.00135	0.00398	-0.01914	-0.3448	-0.002	0.8193
68	SLD 6	0.00135	0.00398	-0.01914	-0.3448	-0.002	0.8193
68	SLD 7	0.00135	0.00526	-0.01932	0.3304	-0.002	-0.797
68	SLD 8	0.00135	0.00526	-0.01932	0.3304	-0.002	-0.797
68	SLD 9	0.04653	0.00397	0.00011	-0.3448	0.0222	0.8193
68	SLD 10	0.04653	0.00397	0.00011	-0.3448	0.0222	0.8193
68	SLD 11	0.04653	0.00525	-0.00007	0.3304	0.0222	-0.7971
68	SLD 12	0.04653	0.00525	-0.00007	0.3304	0.0222	-0.7971
68	SLD 13	0.09924	0.00441	0.0225	-0.1085	0.0504	0.2535
68	SLD 14	0.09924	0.00441	0.0225	-0.1085	0.0504	0.2535
68	SLD 15	0.09924	0.00479	0.02244	0.0941	0.0504	-0.2314
68	SLD 16	0.09924	0.00479	0.02244	0.0941	0.0504	-0.2314
68	SLV 1	-0.14428	0.00415	-0.08119	-0.2744	-0.0801	0.6506
68	SLV 2	-0.14428	0.00415	-0.08119	-0.2744	-0.0801	0.6506
68	SLV 3	-0.14428	0.00517	-0.08133	0.2599	-0.0801	-0.6283
68	SLV 4	-0.14428	0.00517	-0.08133	0.2599	-0.0801	-0.6283
68	SLV 5	-0.02653	0.00294	-0.03086	-0.8976	-0.017	2.1427
68	SLV 6	-0.02653	0.00294	-0.03086	-0.8976	-0.017	2.1427
68	SLV 7	-0.02653	0.00632	-0.03134	0.8832	-0.0169	-2.1204
68	SLV 8	-0.02653	0.00632	-0.03134	0.8832	-0.0169	-2.1204
68	SLV 9	0.0744	0.00292	0.01213	-0.8976	0.0371	2.1426
68	SLV 10	0.0744	0.00292	0.01213	-0.8976	0.0371	2.1426
68	SLV 11	0.0744	0.00629	0.01165	0.8832	0.0371	-2.1205
68	SLV 12	0.0744	0.00629	0.01165	0.8832	0.0371	-2.1205
68	SLV 13	0.19215	0.00407	0.06212	-0.2743	0.1002	0.6505
68	SLV 14	0.19215	0.00407	0.06212	-0.2743	0.1002	0.6505
68	SLV 15	0.19215	0.00508	0.06198	0.26	0.1002	-0.6284
68	SLV 16	0.19215	0.00508	0.06198	0.26	0.1002	-0.6284
69	SLU 1	-0.0363	-0.0001	-0.01475	-0.0087	0.0351	-0.0033
69	SLU 2	-0.0363	-0.0001	-0.01475	-0.0087	0.0351	-0.0033
69	SLU 3	-0.0363	-0.00009	-0.01475	-0.0087	0.0351	-0.0033
69	SLU 4	-0.0363	-0.00008	-0.01475	-0.0087	0.0351	-0.0033

Nodo	Cont.	Spostamento			Rotazione		
Ind.	N.br.	ux	uy	uz	rx	ry	rz
69	SLU 5	-0.0363	-0.00008	-0.01475	-0.0088	0.0351	-0.0034
69	SLU 6	-0.03872	-0.0001	-0.01482	-0.009	0.0372	-0.0035
69	SLU 7	-0.03872	-0.00009	-0.01482	-0.009	0.0372	-0.0035
69	SLU 8	-0.03872	-0.00008	-0.01482	-0.0091	0.0372	-0.0035
69	SLU 9	-0.03872	-0.00008	-0.01482	-0.0091	0.0372	-0.0035
69	SLU 10	-0.04114	-0.00011	-0.01489	-0.0093	0.0393	-0.0036
69	SLU 11	-0.04114	-0.00011	-0.01489	-0.0093	0.0393	-0.0036
69	SLU 12	-0.04114	-0.0001	-0.01489	-0.0093	0.0393	-0.0036
69	SLU 13	-0.04114	-0.0001	-0.01489	-0.0093	0.0393	-0.0036
69	SLU 14	-0.05606	-0.00023	-0.01235	-0.0104	0.0501	-0.004
69	SLU 15	-0.05606	-0.00022	-0.01235	-0.0104	0.0501	-0.004
69	SLU 16	-0.05606	-0.00021	-0.01235	-0.0104	0.0501	-0.004
69	SLU 17	-0.05606	-0.0002	-0.01235	-0.0104	0.0501	-0.004
69	SLU 18	-0.05848	-0.00023	-0.01242	-0.0107	0.0522	-0.0041
69	SLU 19	-0.05848	-0.00022	-0.01242	-0.0107	0.0522	-0.0041
69	SLU 20	-0.05848	-0.00021	-0.01242	-0.0107	0.0522	-0.0041
69	SLU 21	-0.05848	-0.00021	-0.01242	-0.0107	0.0522	-0.0041
69	SLU 22	-0.06091	-0.00024	-0.01249	-0.011	0.0543	-0.0042
69	SLU 23	-0.06091	-0.00023	-0.01249	-0.011	0.0543	-0.0042
69	SLU 24	-0.06091	-0.00023	-0.01249	-0.011	0.0543	-0.0042
69	SLU 25	-0.06091	-0.00022	-0.01249	-0.011	0.0543	-0.0042
69	SLU 26	-0.08571	-0.00042	-0.00874	-0.0128	0.0725	-0.005
69	SLU 27	-0.08571	-0.00041	-0.00874	-0.0128	0.0725	-0.005
69	SLU 28	-0.08571	-0.00041	-0.00874	-0.0128	0.0725	-0.005
69	SLU 29	-0.08571	-0.0004	-0.00874	-0.0128	0.0725	-0.005
69	SLU 30	-0.08813	-0.00042	-0.00882	-0.0131	0.0746	-0.0051
69	SLU 31	-0.08813	-0.00042	-0.00882	-0.0131	0.0746	-0.0051
69	SLU 32	-0.08813	-0.00041	-0.00882	-0.0131	0.0746	-0.0051
69	SLU 33	-0.08813	-0.00041	-0.00882	-0.0131	0.0746	-0.0051
69	SLU 34	-0.0363	-0.0001	-0.01475	-0.0087	0.0351	-0.0033
69	SLU 35	-0.0363	-0.0001	-0.01475	-0.0087	0.0351	-0.0033
69	SLU 36	-0.0363	-0.00009	-0.01475	-0.0087	0.0351	-0.0033
69	SLU 37	-0.0363	-0.00008	-0.01475	-0.0087	0.0351	-0.0033
69	SLU 38	-0.0363	-0.00008	-0.01475	-0.0088	0.0351	-0.0034
69	SLU 39	-0.03872	-0.0001	-0.01482	-0.009	0.0372	-0.0035
69	SLU 40	-0.03872	-0.00009	-0.01482	-0.009	0.0372	-0.0035
69	SLU 41	-0.03872	-0.00008	-0.01482	-0.0091	0.0372	-0.0035
69	SLU 42	-0.03872	-0.00008	-0.01482	-0.0091	0.0372	-0.0035
69	SLU 43	-0.04114	-0.00011	-0.01489	-0.0093	0.0393	-0.0036
69	SLU 44	-0.04114	-0.00011	-0.01489	-0.0093	0.0393	-0.0036
69	SLU 45	-0.04114	-0.0001	-0.01489	-0.0093	0.0393	-0.0036
69	SLU 46	-0.04114	-0.0001	-0.01489	-0.0093	0.0393	-0.0036
69	SLU 47	-0.05606	-0.00023	-0.01235	-0.0104	0.0501	-0.004
69	SLU 48	-0.05606	-0.00022	-0.01235	-0.0104	0.0501	-0.004
69	SLU 49	-0.05606	-0.00021	-0.01235	-0.0104	0.0501	-0.004
69	SLU 50	-0.05606	-0.0002	-0.01235	-0.0104	0.0501	-0.004
69	SLU 51	-0.05848	-0.00023	-0.01242	-0.0107	0.0522	-0.0041
69	SLU 52	-0.05848	-0.00022	-0.01242	-0.0107	0.0522	-0.0041
69	SLU 53	-0.05848	-0.00021	-0.01242	-0.0107	0.0522	-0.0041
69	SLU 54	-0.05848	-0.00021	-0.01242	-0.0107	0.0522	-0.0041
69	SLU 55	-0.06091	-0.00024	-0.01249	-0.011	0.0543	-0.0042
69	SLU 56	-0.06091	-0.00023	-0.01249	-0.011	0.0543	-0.0042
69	SLU 57	-0.06091	-0.00023	-0.01249	-0.011	0.0543	-0.0042
69	SLU 58	-0.06091	-0.00022	-0.01249	-0.011	0.0543	-0.0042
69	SLU 59	-0.08571	-0.00042	-0.00874	-0.0128	0.0725	-0.005
69	SLU 60	-0.08571	-0.00041	-0.00874	-0.0128	0.0725	-0.005
69	SLU 61	-0.08571	-0.00041	-0.00874	-0.0128	0.0725	-0.005
69	SLU 62	-0.08571	-0.0004	-0.00874	-0.0128	0.0725	-0.005
69	SLU 63	-0.08813	-0.00042	-0.00882	-0.0131	0.0746	-0.0051
69	SLU 64	-0.08813	-0.00042	-0.00882	-0.0131	0.0746	-0.0051
69	SLU 65	-0.08813	-0.00041	-0.00882	-0.0131	0.0746	-0.0051
69	SLU 66	-0.08813	-0.00041	-0.00882	-0.0131	0.0746	-0.0051
69	SLU 67	-0.04719	-0.00013	-0.01918	-0.0113	0.0457	-0.0043
69	SLU 68	-0.04719	-0.00013	-0.01918	-0.0113	0.0457	-0.0043
69	SLU 69	-0.04719	-0.00012	-0.01918	-0.0114	0.0457	-0.0044
69	SLU 70	-0.04719	-0.00011	-0.01918	-0.0114	0.0457	-0.0043
69	SLU 71	-0.04719	-0.00011	-0.01918	-0.0114	0.0457	-0.0044
69	SLU 72	-0.04961	-0.00013	-0.01925	-0.0116	0.0478	-0.0045
69	SLU 73	-0.04961	-0.00013	-0.01925	-0.0117	0.0478	-0.0045
69	SLU 74	-0.04961	-0.00012	-0.01925	-0.0117	0.0478	-0.0045
69	SLU 75	-0.04961	-0.00011	-0.01925	-0.0117	0.0478	-0.0045
69	SLU 76	-0.05203	-0.00014	-0.01932	-0.0119	0.0499	-0.0046
69	SLU 77	-0.05203	-0.00014	-0.01932	-0.0119	0.0499	-0.0046
69	SLU 78	-0.05203	-0.00013	-0.01932	-0.012	0.0499	-0.0046
69	SLU 79	-0.05203	-0.00013	-0.01932	-0.012	0.0499	-0.0046
69	SLU 80	-0.06695	-0.00026	-0.01677	-0.013	0.0606	-0.005
69	SLU 81	-0.06695	-0.00025	-0.01677	-0.013	0.0606	-0.005
69	SLU 82	-0.06695	-0.00024	-0.01677	-0.013	0.0606	-0.005
69	SLU 83	-0.06695	-0.00023	-0.01677	-0.013	0.0606	-0.005
69	SLU 84	-0.06937	-0.00026	-0.01684	-0.0133	0.0627	-0.0051
69	SLU 85	-0.06937	-0.00025	-0.01684	-0.0133	0.0627	-0.0051
69	SLU 86	-0.06937	-0.00024	-0.01684	-0.0133	0.0627	-0.0051
69	SLU 87	-0.06937	-0.00024	-0.01684	-0.0133	0.0627	-0.0051
69	SLU 88	-0.0718	-0.00027	-0.01692	-0.0136	0.0648	-0.0052
69	SLU 89	-0.0718	-0.00026	-0.01692	-0.0136	0.0648	-0.0052
69	SLU 90	-0.0718	-0.00026	-0.01692	-0.0136	0.0648	-0.0052
69	SLU 91	-0.0718	-0.00025	-0.01692	-0.0136	0.0648	-0.0052
69	SLU 92	-0.0966	-0.00045	-0.01317	-0.0154	0.083	-0.006
69	SLU 93	-0.0966	-0.00044	-0.01317	-0.0154	0.083	-0.006
69	SLU 94	-0.0966	-0.00044	-0.01317	-0.0154	0.083	-0.006
69	SLU 95	-0.0966	-0.00044	-0.01317	-0.0154	0.083	-0.006
69	SLU 96	-0.09902	-0.00045	-0.01324	-0.0157	0.0851	-0.0061
69	SLU 97	-0.09902	-0.00045	-0.01324	-0.0157	0.0851	-0.0061
69	SLU 98	-0.09902	-0.00044	-0.01324	-0.0157	0.0851	-0.0061
69	SLU 99	-0.09902	-0.00044	-0.01324	-0.0157	0.0851	-0.0061

Nodo	Cont.	Spostamento			Rotazione		
Ind.	N.br.	ux	uy	uz	rx	ry	rz
69	SLU 100	-0.04719	-0.00013	-0.01918	-0.0113	0.0457	-0.0043
69	SLU 101	-0.04719	-0.00013	-0.01918	-0.0113	0.0457	-0.0043
69	SLU 102	-0.04719	-0.00012	-0.01918	-0.0114	0.0457	-0.0044
69	SLU 103	-0.04719	-0.00011	-0.01918	-0.0114	0.0457	-0.0043
69	SLU 104	-0.04719	-0.00011	-0.01918	-0.0114	0.0457	-0.0044
69	SLU 105	-0.04961	-0.00013	-0.01925	-0.0116	0.0478	-0.0045
69	SLU 106	-0.04961	-0.00013	-0.01925	-0.0117	0.0478	-0.0045
69	SLU 107	-0.04961	-0.00012	-0.01925	-0.0117	0.0478	-0.0045
69	SLU 108	-0.04961	-0.00011	-0.01925	-0.0117	0.0478	-0.0045
69	SLU 109	-0.05203	-0.00014	-0.01932	-0.0119	0.0499	-0.0046
69	SLU 110	-0.05203	-0.00014	-0.01932	-0.0119	0.0499	-0.0046
69	SLU 111	-0.05203	-0.00013	-0.01932	-0.012	0.0499	-0.0046
69	SLU 112	-0.05203	-0.00013	-0.01932	-0.012	0.0499	-0.0046
69	SLU 113	-0.06695	-0.00026	-0.01677	-0.013	0.0606	-0.005
69	SLU 114	-0.06695	-0.00025	-0.01677	-0.013	0.0606	-0.005
69	SLU 115	-0.06695	-0.00024	-0.01677	-0.013	0.0606	-0.005
69	SLU 116	-0.06695	-0.00023	-0.01677	-0.013	0.0606	-0.005
69	SLU 117	-0.06937	-0.00026	-0.01684	-0.0133	0.0627	-0.0051
69	SLU 118	-0.06937	-0.00025	-0.01684	-0.0133	0.0627	-0.0051
69	SLU 119	-0.06937	-0.00024	-0.01684	-0.0133	0.0627	-0.0051
69	SLU 120	-0.06937	-0.00024	-0.01684	-0.0133	0.0627	-0.0051
69	SLU 121	-0.0718	-0.00027	-0.01692	-0.0136	0.0648	-0.0052
69	SLU 122	-0.0718	-0.00026	-0.01692	-0.0136	0.0648	-0.0052
69	SLU 123	-0.0718	-0.00026	-0.01692	-0.0136	0.0648	-0.0052
69	SLU 124	-0.0718	-0.00025	-0.01692	-0.0136	0.0648	-0.0052
69	SLU 125	-0.0966	-0.00045	-0.01317	-0.0154	0.083	-0.006
69	SLU 126	-0.0966	-0.00044	-0.01317	-0.0154	0.083	-0.006
69	SLU 127	-0.0966	-0.00044	-0.01317	-0.0154	0.083	-0.006
69	SLU 128	-0.0966	-0.00044	-0.01317	-0.0154	0.083	-0.006
69	SLU 129	-0.09902	-0.00045	-0.01324	-0.0157	0.0851	-0.0061
69	SLU 130	-0.09902	-0.00045	-0.01324	-0.0157	0.0851	-0.0061
69	SLU 131	-0.09902	-0.00044	-0.01324	-0.0157	0.0851	-0.0061
69	SLU 132	-0.09902	-0.00044	-0.01324	-0.0157	0.0851	-0.0061
69	SLE RA 1	-0.0363	-0.0001	-0.01475	-0.0087	0.0351	-0.0033
69	SLE RA 2	-0.0363	-0.0001	-0.01475	-0.0087	0.0351	-0.0033
69	SLE RA 3	-0.0363	-0.0001	-0.01475	-0.0087	0.0351	-0.0033
69	SLE RA 4	-0.0363	-0.00009	-0.01475	-0.0087	0.0351	-0.0033
69	SLE RA 5	-0.0363	-0.00009	-0.01475	-0.0087	0.0351	-0.0033
69	SLE RA 6	-0.03791	-0.0001	-0.0148	-0.0089	0.0365	-0.0034
69	SLE RA 7	-0.03791	-0.0001	-0.0148	-0.0089	0.0365	-0.0034
69	SLE RA 8	-0.03791	-0.00009	-0.0148	-0.0089	0.0365	-0.0034
69	SLE RA 9	-0.03791	-0.00009	-0.0148	-0.0089	0.0365	-0.0034
69	SLE RA 10	-0.03953	-0.00011	-0.01485	-0.0091	0.0379	-0.0035
69	SLE RA 11	-0.03953	-0.00011	-0.01485	-0.0091	0.0379	-0.0035
69	SLE RA 12	-0.03953	-0.0001	-0.01485	-0.0091	0.0379	-0.0035
69	SLE RA 13	-0.03953	-0.0001	-0.01485	-0.0091	0.0379	-0.0035
69	SLE RA 14	-0.04947	-0.00018	-0.01315	-0.0098	0.0451	-0.0038
69	SLE RA 15	-0.04947	-0.00018	-0.01315	-0.0098	0.0451	-0.0038
69	SLE RA 16	-0.04947	-0.00017	-0.01315	-0.0098	0.0451	-0.0038
69	SLE RA 17	-0.04947	-0.00017	-0.01315	-0.0098	0.0451	-0.0038
69	SLE RA 18	-0.05109	-0.00019	-0.0132	-0.01	0.0465	-0.0039
69	SLE RA 19	-0.05109	-0.00018	-0.0132	-0.01	0.0465	-0.0039
69	SLE RA 20	-0.05109	-0.00017	-0.0132	-0.01	0.0465	-0.0039
69	SLE RA 21	-0.05109	-0.00017	-0.0132	-0.01	0.0465	-0.0039
69	SLE RA 22	-0.0527	-0.00019	-0.01324	-0.0102	0.0479	-0.0039
69	SLE RA 23	-0.0527	-0.00019	-0.01324	-0.0102	0.0479	-0.0039
69	SLE RA 24	-0.0527	-0.00019	-0.01324	-0.0102	0.0479	-0.0039
69	SLE RA 25	-0.0527	-0.00018	-0.01324	-0.0102	0.0479	-0.0039
69	SLE RA 26	-0.06924	-0.00031	-0.01075	-0.0114	0.06	-0.0044
69	SLE RA 27	-0.06924	-0.00031	-0.01075	-0.0114	0.06	-0.0044
69	SLE RA 28	-0.06924	-0.00031	-0.01075	-0.0114	0.06	-0.0044
69	SLE RA 29	-0.06924	-0.0003	-0.01075	-0.0114	0.06	-0.0044
69	SLE RA 30	-0.07085	-0.00031	-0.01079	-0.0116	0.0614	-0.0045
69	SLE RA 31	-0.07085	-0.00031	-0.01079	-0.0116	0.0614	-0.0045
69	SLE RA 32	-0.07085	-0.00031	-0.01079	-0.0116	0.0614	-0.0045
69	SLE RA 33	-0.07085	-0.00031	-0.01079	-0.0117	0.0614	-0.0045
69	SLE FR 1	-0.0363	-0.0001	-0.01475	-0.0087	0.0351	-0.0033
69	SLE FR 2	-0.0363	-0.0001	-0.01475	-0.0087	0.0351	-0.0033
69	SLE FR 3	-0.0363	-0.0001	-0.01475	-0.0087	0.0351	-0.0033
69	SLE FR 4	-0.03694	-0.0001	-0.01477	-0.0088	0.0357	-0.0034
69	SLE FR 5	-0.04947	-0.00019	-0.01315	-0.0098	0.0451	-0.0038
69	SLE QP 1	-0.0363	-0.0001	-0.01475	-0.0087	0.0351	-0.0033
69	SLO 1	-0.16786	-0.16001	0.06734	0.068	0.0054	-0.0992
69	SLO 2	-0.16786	-0.16001	0.06734	0.068	0.0054	-0.0992
69	SLO 3	-0.16785	0.1598	0.06738	-0.0854	0.0054	0.0926
69	SLO 4	-0.16785	0.1598	0.06738	-0.0854	0.0054	0.0926
69	SLO 5	-0.07579	-0.53312	0.00981	0.247	0.0262	-0.323
69	SLO 6	-0.07579	-0.53312	0.00981	0.247	0.0262	-0.323
69	SLO 7	-0.07575	0.53292	0.00996	-0.2644	0.0262	0.3164
69	SLO 8	-0.07575	0.53292	0.00996	-0.2644	0.0262	0.3164
69	SLO 9	0.00315	-0.53312	-0.03946	0.2469	0.0441	-0.323
69	SLO 10	0.00315	-0.53312	-0.03946	0.2469	0.0441	-0.323
69	SLO 11	0.00319	0.53292	-0.03931	-0.2644	0.0441	0.3164
69	SLO 12	0.00319	0.53292	-0.03931	-0.2644	0.0441	0.3164
69	SLO 13	0.09526	-0.16001	-0.09688	0.0679	0.0649	-0.0993
69	SLO 14	0.09526	-0.16001	-0.09688	0.0679	0.0649	-0.0993
69	SLO 15	0.09527	0.1598	-0.09684	-0.0855	0.0649	0.0926
69	SLO 16	0.09527	0.1598	-0.09684	-0.0855	0.0649	0.0926
69	SLD 1	-0.14425	-0.14785	0.0526	0.0622	0.0107	-0.0919
69	SLD 2	-0.14425	-0.14785	0.0526	0.0622	0.0107	-0.0919
69	SLD 3	-0.14424	0.14765	0.05264	-0.0795	0.0107	0.0853
69	SLD 4	-0.14424	0.14765	0.05264	-0.0795	0.0107	0.0853
69	SLD 5	-0.0687	-0.49261	0.00539	0.2275	0.0278	-0.2987
69	SLD 6	-0.0687	-0.49261	0.00539	0.2275	0.0278	-0.2987
69	SLD 7	-0.06866	0.4924	0.00553	-0.2449	0.0278	0.2921

Nodo	Cont.	Spostamento			Rotazione		
Ind.	N.br.	ux	uy	uz	rx	ry	rz
69	SLD 8	-0.06866	0.4924	0.00553	-0.2449	0.0278	0.2921
69	SLD 9	-0.00393	-0.49261	-0.03503	0.2275	0.0425	-0.2987
69	SLD 10	-0.00393	-0.49261	-0.03503	0.2275	0.0425	-0.2987
69	SLD 11	-0.00389	0.4924	-0.03489	-0.245	0.0425	0.2921
69	SLD 12	-0.00389	0.4924	-0.03489	-0.245	0.0425	0.2921
69	SLD 13	0.07165	-0.14785	-0.08215	0.0621	0.0596	-0.092
69	SLD 14	0.07165	-0.14785	-0.08215	0.0621	0.0596	-0.092
69	SLD 15	0.07166	0.14765	-0.0821	-0.0796	0.0596	0.0853
69	SLD 16	0.07166	0.14765	-0.0821	-0.0796	0.0596	0.0853
69	SLV 1	-0.27747	-0.3898	0.13571	0.1783	-0.0194	-0.237
69	SLV 2	-0.27747	-0.3898	0.13571	0.1783	-0.0194	-0.237
69	SLV 3	-0.27744	0.38959	0.13582	-0.1955	-0.0194	0.2304
69	SLV 4	-0.27744	0.38959	0.13582	-0.1955	-0.0194	0.2304
69	SLV 5	-0.10869	-1.29909	0.03022	0.6144	0.0188	-0.7824
69	SLV 6	-0.10869	-1.29909	0.03022	0.6144	0.0188	-0.7824
69	SLV 7	-0.1086	1.29888	0.03059	-0.6318	0.0188	0.7758
69	SLV 8	-0.1086	1.29888	0.03059	-0.6318	0.0188	0.7758
69	SLV 9	0.036	-1.29909	-0.06009	0.6143	0.0515	-0.7825
69	SLV 10	0.036	-1.29909	-0.06009	0.6143	0.0515	-0.7825
69	SLV 11	0.0361	1.29888	-0.05972	-0.6318	0.0515	0.7758
69	SLV 12	0.0361	1.29888	-0.05972	-0.6318	0.0515	0.7758
69	SLV 13	0.20485	-0.3898	-0.16532	0.1781	0.0897	-0.2371
69	SLV 14	0.20485	-0.3898	-0.16532	0.1781	0.0897	-0.2371
69	SLV 15	0.20488	0.38959	-0.16521	-0.1957	0.0897	0.2304
69	SLV 16	0.20488	0.38959	-0.16521	-0.1957	0.0897	0.2304
70	SLU 1	0.0363	-0.0001	-0.01475	-0.0087	-0.0351	0.0033
70	SLU 2	0.0363	-0.0001	-0.01475	-0.0087	-0.0351	0.0033
70	SLU 3	0.0363	-0.00009	-0.01475	-0.0087	-0.0351	0.0033
70	SLU 4	0.0363	-0.00008	-0.01475	-0.0087	-0.0351	0.0033
70	SLU 5	0.0363	-0.00008	-0.01475	-0.0088	-0.0351	0.0034
70	SLU 6	0.03878	-0.0001	-0.01478	-0.009	-0.0372	0.0035
70	SLU 7	0.03878	-0.00009	-0.01478	-0.009	-0.0372	0.0035
70	SLU 8	0.03878	-0.00008	-0.01478	-0.0091	-0.0372	0.0035
70	SLU 9	0.03878	-0.00008	-0.01478	-0.0091	-0.0372	0.0035
70	SLU 10	0.04126	-0.00011	-0.01481	-0.0093	-0.0393	0.0036
70	SLU 11	0.04126	-0.00011	-0.01481	-0.0093	-0.0393	0.0036
70	SLU 12	0.04126	-0.0001	-0.01481	-0.0093	-0.0393	0.0036
70	SLU 13	0.04126	-0.0001	-0.01481	-0.0093	-0.0393	0.0036
70	SLU 14	0.05616	-0.00023	-0.01228	-0.0104	-0.05	0.004
70	SLU 15	0.05616	-0.00022	-0.01228	-0.0104	-0.05	0.004
70	SLU 16	0.05616	-0.00021	-0.01228	-0.0104	-0.05	0.004
70	SLU 17	0.05616	-0.0002	-0.01228	-0.0104	-0.05	0.004
70	SLU 18	0.05864	-0.00023	-0.01231	-0.0107	-0.0521	0.0041
70	SLU 19	0.05864	-0.00022	-0.01231	-0.0107	-0.0521	0.0041
70	SLU 20	0.05864	-0.00021	-0.01231	-0.0107	-0.0521	0.0041
70	SLU 21	0.05864	-0.00021	-0.01231	-0.0107	-0.0521	0.0041
70	SLU 22	0.06112	-0.00024	-0.01234	-0.011	-0.0542	0.0042
70	SLU 23	0.06112	-0.00023	-0.01234	-0.011	-0.0542	0.0042
70	SLU 24	0.06112	-0.00023	-0.01234	-0.011	-0.0542	0.0042
70	SLU 25	0.06112	-0.00022	-0.01234	-0.011	-0.0542	0.0042
70	SLU 26	0.08596	-0.00042	-0.00858	-0.0128	-0.0724	0.005
70	SLU 27	0.08596	-0.00041	-0.00858	-0.0128	-0.0724	0.005
70	SLU 28	0.08596	-0.00041	-0.00858	-0.0128	-0.0724	0.005
70	SLU 29	0.08596	-0.00041	-0.00858	-0.0128	-0.0724	0.005
70	SLU 30	0.08844	-0.00042	-0.00861	-0.0131	-0.0744	0.0051
70	SLU 31	0.08844	-0.00042	-0.00861	-0.0131	-0.0744	0.0051
70	SLU 32	0.08844	-0.00041	-0.00861	-0.0131	-0.0744	0.0051
70	SLU 33	0.08844	-0.00041	-0.00861	-0.0131	-0.0744	0.0051
70	SLU 34	0.0363	-0.0001	-0.01475	-0.0087	-0.0351	0.0033
70	SLU 35	0.0363	-0.0001	-0.01475	-0.0087	-0.0351	0.0033
70	SLU 36	0.0363	-0.00009	-0.01475	-0.0087	-0.0351	0.0033
70	SLU 37	0.0363	-0.00008	-0.01475	-0.0087	-0.0351	0.0033
70	SLU 38	0.0363	-0.00008	-0.01475	-0.0088	-0.0351	0.0034
70	SLU 39	0.03878	-0.0001	-0.01478	-0.009	-0.0372	0.0035
70	SLU 40	0.03878	-0.00009	-0.01478	-0.009	-0.0372	0.0035
70	SLU 41	0.03878	-0.00008	-0.01478	-0.0091	-0.0372	0.0035
70	SLU 42	0.03878	-0.00008	-0.01478	-0.0091	-0.0372	0.0035
70	SLU 43	0.04126	-0.00011	-0.01481	-0.0093	-0.0393	0.0036
70	SLU 44	0.04126	-0.00011	-0.01481	-0.0093	-0.0393	0.0036
70	SLU 45	0.04126	-0.0001	-0.01481	-0.0093	-0.0393	0.0036
70	SLU 46	0.04126	-0.0001	-0.01481	-0.0093	-0.0393	0.0036
70	SLU 47	0.05616	-0.00023	-0.01228	-0.0104	-0.05	0.004
70	SLU 48	0.05616	-0.00022	-0.01228	-0.0104	-0.05	0.004
70	SLU 49	0.05616	-0.00021	-0.01228	-0.0104	-0.05	0.004
70	SLU 50	0.05616	-0.0002	-0.01228	-0.0104	-0.05	0.004
70	SLU 51	0.05864	-0.00023	-0.01231	-0.0107	-0.0521	0.0041
70	SLU 52	0.05864	-0.00022	-0.01231	-0.0107	-0.0521	0.0041
70	SLU 53	0.05864	-0.00021	-0.01231	-0.0107	-0.0521	0.0041
70	SLU 54	0.05864	-0.00021	-0.01231	-0.0107	-0.0521	0.0041
70	SLU 55	0.06112	-0.00024	-0.01234	-0.011	-0.0542	0.0042
70	SLU 56	0.06112	-0.00023	-0.01234	-0.011	-0.0542	0.0042
70	SLU 57	0.06112	-0.00023	-0.01234	-0.011	-0.0542	0.0042
70	SLU 58	0.06112	-0.00022	-0.01234	-0.011	-0.0542	0.0042
70	SLU 59	0.08596	-0.00042	-0.00858	-0.0128	-0.0724	0.005
70	SLU 60	0.08596	-0.00041	-0.00858	-0.0128	-0.0724	0.005
70	SLU 61	0.08596	-0.00041	-0.00858	-0.0128	-0.0724	0.005
70	SLU 62	0.08596	-0.00041	-0.00858	-0.0128	-0.0724	0.005
70	SLU 63	0.08844	-0.00042	-0.00861	-0.0131	-0.0744	0.0051
70	SLU 64	0.08844	-0.00042	-0.00861	-0.0131	-0.0744	0.0051
70	SLU 65	0.08844	-0.00041	-0.00861	-0.0131	-0.0744	0.0051
70	SLU 66	0.08844	-0.00041	-0.00861	-0.0131	-0.0744	0.0051
70	SLU 67	0.04719	-0.00013	-0.01918	-0.0113	-0.0457	0.0043
70	SLU 68	0.04719	-0.00013	-0.01918	-0.0113	-0.0457	0.0043
70	SLU 69	0.04719	-0.00012	-0.01918	-0.0114	-0.0457	0.0044
70	SLU 70	0.04719	-0.00011	-0.01918	-0.0114	-0.0457	0.0043

Nodo	Cont.	Spostamento			Rotazione		
Ind.	N.br.	ux	uy	uz	rx	ry	rz
70	SLU 71	0.04719	-0.00011	-0.01918	-0.0114	-0.0457	0.0044
70	SLU 72	0.04967	-0.00013	-0.01921	-0.0116	-0.0478	0.0045
70	SLU 73	0.04967	-0.00013	-0.01921	-0.0117	-0.0478	0.0045
70	SLU 74	0.04967	-0.00012	-0.01921	-0.0117	-0.0478	0.0045
70	SLU 75	0.04967	-0.00011	-0.01921	-0.0117	-0.0478	0.0045
70	SLU 76	0.05215	-0.00014	-0.01924	-0.0119	-0.0498	0.0046
70	SLU 77	0.05215	-0.00014	-0.01924	-0.0119	-0.0498	0.0046
70	SLU 78	0.05215	-0.00013	-0.01924	-0.012	-0.0498	0.0046
70	SLU 79	0.05215	-0.00013	-0.01924	-0.012	-0.0498	0.0046
70	SLU 80	0.06705	-0.00026	-0.01671	-0.013	-0.0606	0.005
70	SLU 81	0.06705	-0.00025	-0.01671	-0.013	-0.0606	0.005
70	SLU 82	0.06705	-0.00024	-0.01671	-0.013	-0.0606	0.005
70	SLU 83	0.06705	-0.00023	-0.01671	-0.013	-0.0606	0.005
70	SLU 84	0.06953	-0.00026	-0.01674	-0.0133	-0.0627	0.0051
70	SLU 85	0.06953	-0.00025	-0.01674	-0.0133	-0.0627	0.0051
70	SLU 86	0.06953	-0.00024	-0.01674	-0.0133	-0.0627	0.0051
70	SLU 87	0.06953	-0.00024	-0.01674	-0.0133	-0.0627	0.0051
70	SLU 88	0.07201	-0.00027	-0.01677	-0.0136	-0.0647	0.0052
70	SLU 89	0.07201	-0.00026	-0.01677	-0.0136	-0.0647	0.0052
70	SLU 90	0.07201	-0.00026	-0.01677	-0.0136	-0.0647	0.0052
70	SLU 91	0.07201	-0.00026	-0.01677	-0.0136	-0.0647	0.0052
70	SLU 92	0.09685	-0.00045	-0.013	-0.0154	-0.0829	0.006
70	SLU 93	0.09685	-0.00045	-0.013	-0.0154	-0.0829	0.006
70	SLU 94	0.09685	-0.00044	-0.013	-0.0154	-0.0829	0.006
70	SLU 95	0.09685	-0.00044	-0.013	-0.0154	-0.0829	0.006
70	SLU 96	0.09933	-0.00045	-0.01303	-0.0157	-0.085	0.0061
70	SLU 97	0.09933	-0.00045	-0.01303	-0.0157	-0.085	0.0061
70	SLU 98	0.09933	-0.00044	-0.01303	-0.0157	-0.085	0.0061
70	SLU 99	0.09933	-0.00044	-0.01303	-0.0157	-0.085	0.0061
70	SLU 100	0.04719	-0.00013	-0.01918	-0.0113	-0.0457	0.0043
70	SLU 101	0.04719	-0.00013	-0.01918	-0.0113	-0.0457	0.0043
70	SLU 102	0.04719	-0.00012	-0.01918	-0.0114	-0.0457	0.0044
70	SLU 103	0.04719	-0.00011	-0.01918	-0.0114	-0.0457	0.0043
70	SLU 104	0.04719	-0.00011	-0.01918	-0.0114	-0.0457	0.0044
70	SLU 105	0.04967	-0.00013	-0.01921	-0.0116	-0.0478	0.0045
70	SLU 106	0.04967	-0.00013	-0.01921	-0.0117	-0.0478	0.0045
70	SLU 107	0.04967	-0.00012	-0.01921	-0.0117	-0.0478	0.0045
70	SLU 108	0.04967	-0.00011	-0.01921	-0.0117	-0.0478	0.0045
70	SLU 109	0.05215	-0.00014	-0.01924	-0.0119	-0.0498	0.0046
70	SLU 110	0.05215	-0.00014	-0.01924	-0.0119	-0.0498	0.0046
70	SLU 111	0.05215	-0.00013	-0.01924	-0.012	-0.0498	0.0046
70	SLU 112	0.05215	-0.00013	-0.01924	-0.012	-0.0498	0.0046
70	SLU 113	0.06705	-0.00026	-0.01671	-0.013	-0.0606	0.005
70	SLU 114	0.06705	-0.00025	-0.01671	-0.013	-0.0606	0.005
70	SLU 115	0.06705	-0.00024	-0.01671	-0.013	-0.0606	0.005
70	SLU 116	0.06705	-0.00023	-0.01671	-0.013	-0.0606	0.005
70	SLU 117	0.06953	-0.00026	-0.01674	-0.0133	-0.0627	0.0051
70	SLU 118	0.06953	-0.00025	-0.01674	-0.0133	-0.0627	0.0051
70	SLU 119	0.06953	-0.00024	-0.01674	-0.0133	-0.0627	0.0051
70	SLU 120	0.06953	-0.00024	-0.01674	-0.0133	-0.0627	0.0051
70	SLU 121	0.07201	-0.00027	-0.01677	-0.0136	-0.0647	0.0052
70	SLU 122	0.07201	-0.00026	-0.01677	-0.0136	-0.0647	0.0052
70	SLU 123	0.07201	-0.00026	-0.01677	-0.0136	-0.0647	0.0052
70	SLU 124	0.07201	-0.00026	-0.01677	-0.0136	-0.0647	0.0052
70	SLU 125	0.09685	-0.00045	-0.013	-0.0154	-0.0829	0.006
70	SLU 126	0.09685	-0.00045	-0.013	-0.0154	-0.0829	0.006
70	SLU 127	0.09685	-0.00044	-0.013	-0.0154	-0.0829	0.006
70	SLU 128	0.09685	-0.00044	-0.013	-0.0154	-0.0829	0.006
70	SLU 129	0.09933	-0.00045	-0.01303	-0.0157	-0.085	0.0061
70	SLU 130	0.09933	-0.00045	-0.01303	-0.0157	-0.085	0.0061
70	SLU 131	0.09933	-0.00044	-0.01303	-0.0157	-0.085	0.0061
70	SLU 132	0.09933	-0.00044	-0.01303	-0.0157	-0.085	0.0061
70	SLE RA 1	0.0363	-0.0001	-0.01475	-0.0087	-0.0351	0.0033
70	SLE RA 2	0.0363	-0.0001	-0.01475	-0.0087	-0.0351	0.0033
70	SLE RA 3	0.0363	-0.0001	-0.01475	-0.0087	-0.0351	0.0033
70	SLE RA 4	0.0363	-0.00009	-0.01475	-0.0087	-0.0351	0.0033
70	SLE RA 5	0.0363	-0.00009	-0.01475	-0.0087	-0.0351	0.0033
70	SLE RA 6	0.03795	-0.0001	-0.01477	-0.0089	-0.0365	0.0034
70	SLE RA 7	0.03795	-0.0001	-0.01477	-0.0089	-0.0365	0.0034
70	SLE RA 8	0.03795	-0.00009	-0.01477	-0.0089	-0.0365	0.0034
70	SLE RA 9	0.03795	-0.00009	-0.01477	-0.0089	-0.0365	0.0034
70	SLE RA 10	0.03961	-0.00011	-0.01479	-0.0091	-0.0379	0.0035
70	SLE RA 11	0.03961	-0.00011	-0.01479	-0.0091	-0.0379	0.0035
70	SLE RA 12	0.03961	-0.0001	-0.01479	-0.0091	-0.0379	0.0035
70	SLE RA 13	0.03961	-0.0001	-0.01479	-0.0091	-0.0379	0.0035
70	SLE RA 14	0.04954	-0.00018	-0.0131	-0.0098	-0.0451	0.0038
70	SLE RA 15	0.04954	-0.00018	-0.0131	-0.0098	-0.0451	0.0038
70	SLE RA 16	0.04954	-0.00017	-0.0131	-0.0098	-0.0451	0.0038
70	SLE RA 17	0.04954	-0.00017	-0.0131	-0.0098	-0.0451	0.0038
70	SLE RA 18	0.05119	-0.00019	-0.01312	-0.01	-0.0465	0.0039
70	SLE RA 19	0.05119	-0.00018	-0.01312	-0.01	-0.0465	0.0039
70	SLE RA 20	0.05119	-0.00017	-0.01312	-0.01	-0.0465	0.0039
70	SLE RA 21	0.05119	-0.00017	-0.01312	-0.01	-0.0465	0.0039
70	SLE RA 22	0.05285	-0.00019	-0.01315	-0.0102	-0.0478	0.0039
70	SLE RA 23	0.05285	-0.00019	-0.01315	-0.0102	-0.0478	0.0039
70	SLE RA 24	0.05285	-0.00019	-0.01315	-0.0102	-0.0478	0.0039
70	SLE RA 25	0.05285	-0.00018	-0.01315	-0.0102	-0.0478	0.0039
70	SLE RA 26	0.0694	-0.00031	-0.01063	-0.0114	-0.06	0.0044
70	SLE RA 27	0.0694	-0.00031	-0.01063	-0.0114	-0.06	0.0044
70	SLE RA 28	0.0694	-0.00031	-0.01063	-0.0114	-0.06	0.0044
70	SLE RA 29	0.0694	-0.0003	-0.01063	-0.0114	-0.06	0.0044
70	SLE RA 30	0.07106	-0.00031	-0.01066	-0.0116	-0.0613	0.0045
70	SLE RA 31	0.07106	-0.00031	-0.01066	-0.0116	-0.0613	0.0045
70	SLE RA 32	0.07106	-0.00031	-0.01066	-0.0116	-0.0613	0.0045
70	SLE RA 33	0.07106	-0.00031	-0.01066	-0.0116	-0.0613	0.0045

Nodo	Cont.	Spostamento			Rotazione		
Ind.	N.br.	ux	uy	uz	rx	ry	rz
70	SLE FR 1	0.0363	-0.0001	-0.01475	-0.0087	-0.0351	0.0033
70	SLE FR 2	0.0363	-0.0001	-0.01475	-0.0087	-0.0351	0.0033
70	SLE FR 3	0.0363	-0.0001	-0.01475	-0.0087	-0.0351	0.0033
70	SLE FR 4	0.03696	-0.0001	-0.01476	-0.0088	-0.0357	0.0034
70	SLE FR 5	0.04954	-0.00019	-0.0131	-0.0098	-0.0451	0.0038
70	SLE QP 1	0.0363	-0.0001	-0.01475	-0.0087	-0.0351	0.0033
70	SLO 1	-0.09526	-0.16001	-0.09688	0.0679	-0.0649	0.0993
70	SLO 2	-0.09526	-0.16001	-0.09688	0.0679	-0.0649	0.0993
70	SLO 3	-0.09527	0.1598	-0.09684	-0.0855	-0.0649	-0.0926
70	SLO 4	-0.09527	0.1598	-0.09684	-0.0855	-0.0649	-0.0926
70	SLO 5	-0.00315	-0.53312	-0.03946	0.2469	-0.0441	0.323
70	SLO 6	-0.00315	-0.53312	-0.03946	0.2469	-0.0441	0.323
70	SLO 7	-0.00319	0.53292	-0.03931	-0.2644	-0.0441	-0.3164
70	SLO 8	-0.00319	0.53292	-0.03931	-0.2644	-0.0441	-0.3164
70	SLO 9	0.07579	-0.53312	0.00981	0.247	-0.0262	0.323
70	SLO 10	0.07579	-0.53312	0.00981	0.247	-0.0262	0.323
70	SLO 11	0.07575	0.53292	0.00996	-0.2644	-0.0262	-0.3164
70	SLO 12	0.07575	0.53292	0.00996	-0.2644	-0.0262	-0.3164
70	SLO 13	0.16786	-0.16001	0.06734	0.068	-0.0054	0.0992
70	SLO 14	0.16786	-0.16001	0.06734	0.068	-0.0054	0.0992
70	SLO 15	0.16785	0.1598	0.06738	-0.0854	-0.0054	-0.0926
70	SLO 16	0.16785	0.1598	0.06738	-0.0854	-0.0054	-0.0926
70	SLD 1	-0.07165	-0.14785	-0.08215	0.0621	-0.0596	0.092
70	SLD 2	-0.07165	-0.14785	-0.08215	0.0621	-0.0596	0.092
70	SLD 3	-0.07166	0.14765	-0.0821	-0.0796	-0.0596	-0.0853
70	SLD 4	-0.07166	0.14765	-0.0821	-0.0796	-0.0596	-0.0853
70	SLD 5	0.00393	-0.49261	-0.03503	0.2275	-0.0425	0.2987
70	SLD 6	0.00393	-0.49261	-0.03503	0.2275	-0.0425	0.2987
70	SLD 7	0.00389	0.4924	-0.03489	-0.245	-0.0425	-0.2921
70	SLD 8	0.00389	0.4924	-0.03489	-0.245	-0.0425	-0.2921
70	SLD 9	0.0687	-0.49261	0.00539	0.2275	-0.0278	0.2987
70	SLD 10	0.0687	-0.49261	0.00539	0.2275	-0.0278	0.2987
70	SLD 11	0.06866	0.4924	0.00553	-0.2449	-0.0278	-0.2921
70	SLD 12	0.06866	0.4924	0.00553	-0.2449	-0.0278	-0.2921
70	SLD 13	0.14425	-0.14785	0.0526	0.0622	-0.0107	0.0919
70	SLD 14	0.14425	-0.14785	0.0526	0.0622	-0.0107	0.0919
70	SLD 15	0.14424	0.14765	0.05264	-0.0795	-0.0107	-0.0853
70	SLD 16	0.14424	0.14765	0.05264	-0.0795	-0.0107	-0.0853
70	SLV 1	-0.20485	-0.3898	-0.16532	0.1781	-0.0897	0.2371
70	SLV 2	-0.20485	-0.3898	-0.16532	0.1781	-0.0897	0.2371
70	SLV 3	-0.20488	0.38959	-0.16521	-0.1957	-0.0897	-0.2304
70	SLV 4	-0.20488	0.38959	-0.16521	-0.1957	-0.0897	-0.2304
70	SLV 5	-0.036	-1.29909	-0.06009	0.6143	-0.0515	0.7825
70	SLV 6	-0.036	-1.29909	-0.06009	0.6143	-0.0515	0.7825
70	SLV 7	-0.0361	1.29888	-0.05972	-0.6318	-0.0515	-0.7758
70	SLV 8	-0.0361	1.29888	-0.05972	-0.6318	-0.0515	-0.7758
70	SLV 9	0.10869	-1.29909	0.03022	0.6144	-0.0188	0.7824
70	SLV 10	0.10869	-1.29909	0.03022	0.6144	-0.0188	0.7824
70	SLV 11	0.1086	1.29888	0.03059	-0.6318	-0.0188	-0.7758
70	SLV 12	0.1086	1.29888	0.03059	-0.6318	-0.0188	-0.7758
70	SLV 13	0.27747	-0.3898	0.13571	0.1783	0.0194	0.237
70	SLV 14	0.27747	-0.3898	0.13571	0.1783	0.0194	0.237
70	SLV 15	0.27744	0.38959	0.13582	-0.1955	0.0194	-0.2304
70	SLV 16	0.27744	0.38959	0.13582	-0.1955	0.0194	-0.2304
71	SLU 1	-0.03614	-0.00008	-0.01343	-0.0029	0.0355	-0.0011
71	SLU 2	-0.03614	-0.00008	-0.01343	-0.0029	0.0355	-0.0011
71	SLU 3	-0.03614	-0.00007	-0.01343	-0.003	0.0355	-0.0011
71	SLU 4	-0.03614	-0.00006	-0.01343	-0.003	0.0355	-0.0011
71	SLU 5	-0.03614	-0.00006	-0.01343	-0.003	0.0355	-0.0011
71	SLU 6	-0.04092	-0.00008	-0.0135	-0.003	0.0397	-0.0011
71	SLU 7	-0.04092	-0.00008	-0.0135	-0.0031	0.0397	-0.0011
71	SLU 8	-0.04092	-0.00007	-0.0135	-0.0031	0.0397	-0.0011
71	SLU 9	-0.04092	-0.00006	-0.0135	-0.0031	0.0397	-0.0011
71	SLU 10	-0.0457	-0.00009	-0.01356	-0.0031	0.0439	-0.0011
71	SLU 11	-0.0457	-0.00009	-0.01356	-0.0031	0.0439	-0.0011
71	SLU 12	-0.0457	-0.00008	-0.01356	-0.0032	0.0439	-0.0011
71	SLU 13	-0.0457	-0.00008	-0.01356	-0.0032	0.0439	-0.0011
71	SLU 14	-0.07545	-0.0002	-0.00806	-0.0034	0.0654	-0.0013
71	SLU 15	-0.07545	-0.00019	-0.00806	-0.0034	0.0654	-0.0013
71	SLU 16	-0.07545	-0.00018	-0.00806	-0.0034	0.0654	-0.0013
71	SLU 17	-0.07545	-0.00018	-0.00806	-0.0034	0.0654	-0.0013
71	SLU 18	-0.08023	-0.00021	-0.00813	-0.0035	0.0696	-0.0013
71	SLU 19	-0.08023	-0.0002	-0.00813	-0.0035	0.0696	-0.0013
71	SLU 20	-0.08023	-0.00019	-0.00813	-0.0035	0.0696	-0.0013
71	SLU 21	-0.08023	-0.00018	-0.00813	-0.0035	0.0696	-0.0013
71	SLU 22	-0.08501	-0.00021	-0.00819	-0.0036	0.0738	-0.0013
71	SLU 23	-0.08501	-0.00021	-0.00819	-0.0036	0.0738	-0.0013
71	SLU 24	-0.08501	-0.0002	-0.00819	-0.0036	0.0738	-0.0013
71	SLU 25	-0.08501	-0.0002	-0.00819	-0.0036	0.0738	-0.0013
71	SLU 26	-0.13441	-0.00039	-0.00001	-0.004	0.1103	-0.0015
71	SLU 27	-0.13441	-0.00039	-0.00001	-0.0041	0.1103	-0.0015
71	SLU 28	-0.13441	-0.00038	-0.00001	-0.0041	0.1103	-0.0015
71	SLU 29	-0.13441	-0.00038	-0.00001	-0.0041	0.1103	-0.0015
71	SLU 30	-0.13919	-0.00039	-0.00007	-0.0042	0.1144	-0.0016
71	SLU 31	-0.13919	-0.00039	-0.00007	-0.0042	0.1144	-0.0016
71	SLU 32	-0.13919	-0.00038	-0.00007	-0.0042	0.1144	-0.0016
71	SLU 33	-0.13919	-0.00038	-0.00007	-0.0042	0.1144	-0.0016
71	SLU 34	-0.03614	-0.00008	-0.01343	-0.0029	0.0355	-0.0011
71	SLU 35	-0.03614	-0.00008	-0.01343	-0.0029	0.0355	-0.0011
71	SLU 36	-0.03614	-0.00007	-0.01343	-0.003	0.0355	-0.0011
71	SLU 37	-0.03614	-0.00006	-0.01343	-0.003	0.0355	-0.0011
71	SLU 38	-0.03614	-0.00006	-0.01343	-0.003	0.0355	-0.0011
71	SLU 39	-0.04092	-0.00008	-0.0135	-0.003	0.0397	-0.0011
71	SLU 40	-0.04092	-0.00008	-0.0135	-0.0031	0.0397	-0.0011
71	SLU 41	-0.04092	-0.00007	-0.0135	-0.0031	0.0397	-0.0011

Nodo	Cont.	Spostamento			Rotazione		
Ind.	N.br.	ux	uy	uz	rx	ry	rz
71	SLU 42	-0.04092	-0.00006	-0.0135	-0.0031	0.0397	-0.0011
71	SLU 43	-0.0457	-0.00009	-0.01356	-0.0031	0.0439	-0.0011
71	SLU 44	-0.0457	-0.00009	-0.01356	-0.0031	0.0439	-0.0011
71	SLU 45	-0.0457	-0.00008	-0.01356	-0.0032	0.0439	-0.0011
71	SLU 46	-0.0457	-0.00008	-0.01356	-0.0032	0.0439	-0.0011
71	SLU 47	-0.07545	-0.0002	-0.00806	-0.0034	0.0654	-0.0013
71	SLU 48	-0.07545	-0.00019	-0.00806	-0.0034	0.0654	-0.0013
71	SLU 49	-0.07545	-0.00018	-0.00806	-0.0034	0.0654	-0.0013
71	SLU 50	-0.07545	-0.00018	-0.00806	-0.0034	0.0654	-0.0013
71	SLU 51	-0.08023	-0.00021	-0.00813	-0.0035	0.0696	-0.0013
71	SLU 52	-0.08023	-0.0002	-0.00813	-0.0035	0.0696	-0.0013
71	SLU 53	-0.08023	-0.00019	-0.00813	-0.0035	0.0696	-0.0013
71	SLU 54	-0.08023	-0.00018	-0.00813	-0.0035	0.0696	-0.0013
71	SLU 55	-0.08501	-0.00021	-0.00819	-0.0036	0.0738	-0.0013
71	SLU 56	-0.08501	-0.00021	-0.00819	-0.0036	0.0738	-0.0013
71	SLU 57	-0.08501	-0.0002	-0.00819	-0.0036	0.0738	-0.0013
71	SLU 58	-0.08501	-0.0002	-0.00819	-0.0036	0.0738	-0.0013
71	SLU 59	-0.13441	-0.00039	-0.00001	-0.004	0.1103	-0.0015
71	SLU 60	-0.13441	-0.00039	-0.00001	-0.0041	0.1103	-0.0015
71	SLU 61	-0.13441	-0.00038	-0.00001	-0.0041	0.1103	-0.0015
71	SLU 62	-0.13441	-0.00038	-0.00001	-0.0041	0.1103	-0.0015
71	SLU 63	-0.13919	-0.00039	-0.00007	-0.0042	0.1144	-0.0016
71	SLU 64	-0.13919	-0.00039	-0.00007	-0.0042	0.1144	-0.0016
71	SLU 65	-0.13919	-0.00038	-0.00007	-0.0042	0.1144	-0.0016
71	SLU 66	-0.13919	-0.00038	-0.00007	-0.0042	0.1144	-0.0016
71	SLU 67	-0.04698	-0.00011	-0.01747	-0.0038	0.0462	-0.0014
71	SLU 68	-0.04698	-0.00011	-0.01747	-0.0038	0.0462	-0.0014
71	SLU 69	-0.04698	-0.0001	-0.01747	-0.0038	0.0462	-0.0014
71	SLU 70	-0.04698	-0.00009	-0.01747	-0.0038	0.0462	-0.0014
71	SLU 71	-0.04698	-0.00009	-0.01747	-0.0039	0.0462	-0.0014
71	SLU 72	-0.05176	-0.00011	-0.01753	-0.0039	0.0504	-0.0014
71	SLU 73	-0.05176	-0.0001	-0.01753	-0.0039	0.0504	-0.0014
71	SLU 74	-0.05176	-0.00009	-0.01753	-0.004	0.0504	-0.0014
71	SLU 75	-0.05176	-0.00009	-0.01753	-0.004	0.0504	-0.0014
71	SLU 76	-0.05654	-0.00012	-0.01759	-0.004	0.0546	-0.0015
71	SLU 77	-0.05654	-0.00011	-0.01759	-0.004	0.0546	-0.0015
71	SLU 78	-0.05654	-0.00011	-0.01759	-0.004	0.0546	-0.0015
71	SLU 79	-0.05654	-0.0001	-0.01759	-0.004	0.0546	-0.0015
71	SLU 80	-0.08629	-0.00023	-0.01209	-0.0043	0.0761	-0.0016
71	SLU 81	-0.08629	-0.00022	-0.01209	-0.0043	0.0761	-0.0016
71	SLU 82	-0.08629	-0.00021	-0.01209	-0.0043	0.0761	-0.0016
71	SLU 83	-0.08629	-0.00021	-0.01209	-0.0043	0.0761	-0.0016
71	SLU 84	-0.09107	-0.00023	-0.01216	-0.0044	0.0803	-0.0016
71	SLU 85	-0.09107	-0.00022	-0.01216	-0.0044	0.0803	-0.0016
71	SLU 86	-0.09107	-0.00021	-0.01216	-0.0044	0.0803	-0.0016
71	SLU 87	-0.09107	-0.00021	-0.01216	-0.0044	0.0803	-0.0016
71	SLU 88	-0.09585	-0.00024	-0.01222	-0.0045	0.0845	-0.0016
71	SLU 89	-0.09585	-0.00023	-0.01222	-0.0045	0.0845	-0.0016
71	SLU 90	-0.09585	-0.00023	-0.01222	-0.0045	0.0845	-0.0016
71	SLU 91	-0.09585	-0.00023	-0.01222	-0.0045	0.0845	-0.0017
71	SLU 92	-0.14526	-0.00041	-0.00404	-0.0049	0.1209	-0.0018
71	SLU 93	-0.14526	-0.00041	-0.00404	-0.0049	0.1209	-0.0018
71	SLU 94	-0.14526	-0.00041	-0.00404	-0.0049	0.1209	-0.0018
71	SLU 95	-0.14526	-0.0004	-0.00404	-0.005	0.1209	-0.0019
71	SLU 96	-0.15003	-0.00042	-0.0041	-0.005	0.1251	-0.0019
71	SLU 97	-0.15003	-0.00041	-0.0041	-0.005	0.1251	-0.0019
71	SLU 98	-0.15003	-0.00041	-0.0041	-0.005	0.1251	-0.0019
71	SLU 99	-0.15003	-0.00041	-0.0041	-0.0051	0.1251	-0.0019
71	SLU 100	-0.04698	-0.00011	-0.01747	-0.0038	0.0462	-0.0014
71	SLU 101	-0.04698	-0.00011	-0.01747	-0.0038	0.0462	-0.0014
71	SLU 102	-0.04698	-0.0001	-0.01747	-0.0038	0.0462	-0.0014
71	SLU 103	-0.04698	-0.00009	-0.01747	-0.0038	0.0462	-0.0014
71	SLU 104	-0.04698	-0.00009	-0.01747	-0.0039	0.0462	-0.0014
71	SLU 105	-0.05176	-0.00011	-0.01753	-0.0039	0.0504	-0.0014
71	SLU 106	-0.05176	-0.0001	-0.01753	-0.0039	0.0504	-0.0014
71	SLU 107	-0.05176	-0.00009	-0.01753	-0.004	0.0504	-0.0014
71	SLU 108	-0.05176	-0.00009	-0.01753	-0.004	0.0504	-0.0014
71	SLU 109	-0.05654	-0.00012	-0.01759	-0.004	0.0546	-0.0015
71	SLU 110	-0.05654	-0.00011	-0.01759	-0.004	0.0546	-0.0015
71	SLU 111	-0.05654	-0.00011	-0.01759	-0.004	0.0546	-0.0015
71	SLU 112	-0.05654	-0.0001	-0.01759	-0.004	0.0546	-0.0015
71	SLU 113	-0.08629	-0.00023	-0.01209	-0.0043	0.0761	-0.0016
71	SLU 114	-0.08629	-0.00022	-0.01209	-0.0043	0.0761	-0.0016
71	SLU 115	-0.08629	-0.00021	-0.01209	-0.0043	0.0761	-0.0016
71	SLU 116	-0.08629	-0.00021	-0.01209	-0.0043	0.0761	-0.0016
71	SLU 117	-0.09107	-0.00023	-0.01216	-0.0044	0.0803	-0.0016
71	SLU 118	-0.09107	-0.00022	-0.01216	-0.0044	0.0803	-0.0016
71	SLU 119	-0.09107	-0.00021	-0.01216	-0.0044	0.0803	-0.0016
71	SLU 120	-0.09107	-0.00021	-0.01216	-0.0044	0.0803	-0.0016
71	SLU 121	-0.09585	-0.00024	-0.01222	-0.0045	0.0845	-0.0016
71	SLU 122	-0.09585	-0.00023	-0.01222	-0.0045	0.0845	-0.0016
71	SLU 123	-0.09585	-0.00023	-0.01222	-0.0045	0.0845	-0.0016
71	SLU 124	-0.09585	-0.00023	-0.01222	-0.0045	0.0845	-0.0017
71	SLU 125	-0.14526	-0.00041	-0.00404	-0.0049	0.1209	-0.0018
71	SLU 126	-0.14526	-0.00041	-0.00404	-0.0049	0.1209	-0.0018
71	SLU 127	-0.14526	-0.00041	-0.00404	-0.0049	0.1209	-0.0018
71	SLU 128	-0.14526	-0.0004	-0.00404	-0.005	0.1209	-0.0019
71	SLU 129	-0.15003	-0.00042	-0.0041	-0.005	0.1251	-0.0019
71	SLU 130	-0.15003	-0.00041	-0.0041	-0.005	0.1251	-0.0019
71	SLU 131	-0.15003	-0.00041	-0.0041	-0.005	0.1251	-0.0019
71	SLU 132	-0.15003	-0.00041	-0.0041	-0.0051	0.1251	-0.0019
71	SLE RA 1	-0.03614	-0.00008	-0.01343	-0.0029	0.0355	-0.0011
71	SLE RA 2	-0.03614	-0.00008	-0.01343	-0.0029	0.0355	-0.0011
71	SLE RA 3	-0.03614	-0.00008	-0.01343	-0.003	0.0355	-0.0011
71	SLE RA 4	-0.03614	-0.00007	-0.01343	-0.003	0.0355	-0.0011

Nodo	Cont.	Spostamento			Rotazione		
Ind.	N.br.	ux	uy	uz	rx	ry	rz
71	SLE RA 5	-0.03614	-0.00007	-0.01343	-0.003	0.0355	-0.0011
71	SLE RA 6	-0.03932	-0.00008	-0.01348	-0.003	0.0383	-0.0011
71	SLE RA 7	-0.03932	-0.00008	-0.01348	-0.003	0.0383	-0.0011
71	SLE RA 8	-0.03932	-0.00007	-0.01348	-0.003	0.0383	-0.0011
71	SLE RA 9	-0.03932	-0.00007	-0.01348	-0.003	0.0383	-0.0011
71	SLE RA 10	-0.04251	-0.00009	-0.01352	-0.0031	0.0411	-0.0011
71	SLE RA 11	-0.04251	-0.00009	-0.01352	-0.0031	0.0411	-0.0011
71	SLE RA 12	-0.04251	-0.00008	-0.01352	-0.0031	0.0411	-0.0011
71	SLE RA 13	-0.04251	-0.00008	-0.01352	-0.0031	0.0411	-0.0011
71	SLE RA 14	-0.06235	-0.00016	-0.00985	-0.0032	0.0554	-0.0012
71	SLE RA 15	-0.06235	-0.00016	-0.00985	-0.0032	0.0554	-0.0012
71	SLE RA 16	-0.06235	-0.00015	-0.00985	-0.0033	0.0554	-0.0012
71	SLE RA 17	-0.06235	-0.00015	-0.00985	-0.0033	0.0554	-0.0012
71	SLE RA 18	-0.06553	-0.00017	-0.0099	-0.0033	0.0582	-0.0012
71	SLE RA 19	-0.06553	-0.00016	-0.0099	-0.0033	0.0582	-0.0012
71	SLE RA 20	-0.06553	-0.00015	-0.0099	-0.0033	0.0582	-0.0012
71	SLE RA 21	-0.06553	-0.00015	-0.0099	-0.0033	0.0582	-0.0012
71	SLE RA 22	-0.06872	-0.00017	-0.00994	-0.0034	0.061	-0.0012
71	SLE RA 23	-0.06872	-0.00017	-0.00994	-0.0034	0.061	-0.0012
71	SLE RA 24	-0.06872	-0.00016	-0.00994	-0.0034	0.061	-0.0012
71	SLE RA 25	-0.06872	-0.00016	-0.00994	-0.0034	0.061	-0.0012
71	SLE RA 26	-0.10166	-0.00029	-0.00448	-0.0037	0.0853	-0.0014
71	SLE RA 27	-0.10166	-0.00029	-0.00448	-0.0037	0.0853	-0.0014
71	SLE RA 28	-0.10166	-0.00028	-0.00448	-0.0037	0.0853	-0.0014
71	SLE RA 29	-0.10166	-0.00028	-0.00448	-0.0037	0.0853	-0.0014
71	SLE RA 30	-0.10484	-0.00029	-0.00453	-0.0037	0.0881	-0.0014
71	SLE RA 31	-0.10484	-0.00029	-0.00453	-0.0038	0.0881	-0.0014
71	SLE RA 32	-0.10484	-0.00028	-0.00453	-0.0038	0.0881	-0.0014
71	SLE RA 33	-0.10484	-0.00028	-0.00453	-0.0038	0.0881	-0.0014
71	SLE FR 1	-0.03614	-0.00008	-0.01343	-0.0029	0.0355	-0.0011
71	SLE FR 2	-0.03614	-0.00008	-0.01343	-0.0029	0.0355	-0.0011
71	SLE FR 3	-0.03614	-0.00008	-0.01343	-0.0029	0.0355	-0.0011
71	SLE FR 4	-0.03741	-0.00009	-0.01345	-0.003	0.0366	-0.0011
71	SLE FR 5	-0.06235	-0.00017	-0.00985	-0.0032	0.0554	-0.0012
71	SLE QP 1	-0.03614	-0.00008	-0.01343	-0.0029	0.0355	-0.0011
71	SLO 1	-0.17012	-0.15999	0.07018	0.0738	0.0052	-0.097
71	SLO 2	-0.17012	-0.15999	0.07018	0.0738	0.0052	-0.097
71	SLO 3	-0.17012	0.15982	0.07018	-0.0797	0.0052	0.0949
71	SLO 4	-0.17012	0.15982	0.07018	-0.0797	0.0052	0.0949
71	SLO 5	-0.07633	-0.5331	0.01165	0.2529	0.0264	-0.3208
71	SLO 6	-0.07633	-0.5331	0.01165	0.2529	0.0264	-0.3208
71	SLO 7	-0.07633	0.53293	0.01165	-0.2587	0.0264	0.3186
71	SLO 8	-0.07633	0.53293	0.01165	-0.2587	0.0264	0.3186
71	SLO 9	0.00406	-0.5331	-0.03852	0.2529	0.0446	-0.3208
71	SLO 10	0.00406	-0.5331	-0.03852	0.2529	0.0446	-0.3208
71	SLO 11	0.00405	0.53293	-0.03852	-0.2588	0.0446	0.3186
71	SLO 12	0.00405	0.53293	-0.03852	-0.2588	0.0446	0.3186
71	SLO 13	0.09784	-0.15999	-0.09705	0.0738	0.0658	-0.097
71	SLO 14	0.09784	-0.15999	-0.09705	0.0738	0.0658	-0.097
71	SLO 15	0.09784	0.15982	-0.09705	-0.0797	0.0658	0.0948
71	SLO 16	0.09784	0.15982	-0.09705	-0.0797	0.0658	0.0948
71	SLD 1	-0.14607	-0.14783	0.05517	0.068	0.0106	-0.0897
71	SLD 2	-0.14607	-0.14783	0.05517	0.068	0.0106	-0.0897
71	SLD 3	-0.14607	0.14766	0.05517	-0.0738	0.0106	0.0876
71	SLD 4	-0.14607	0.14766	0.05517	-0.0738	0.0106	0.0876
71	SLD 5	-0.06912	-0.49258	0.00715	0.2334	0.028	-0.2965
71	SLD 6	-0.06912	-0.49258	0.00715	0.2334	0.028	-0.2965
71	SLD 7	-0.06912	0.49241	0.00715	-0.2393	0.028	0.2943
71	SLD 8	-0.06912	0.49241	0.00715	-0.2393	0.028	0.2943
71	SLD 9	-0.00316	-0.49258	-0.03402	0.2334	0.043	-0.2965
71	SLD 10	-0.00316	-0.49258	-0.03402	0.2334	0.043	-0.2965
71	SLD 11	-0.00316	0.49241	-0.03402	-0.2393	0.043	0.2943
71	SLD 12	-0.00316	0.49241	-0.03402	-0.2393	0.043	0.2943
71	SLD 13	0.07379	-0.14783	-0.08204	0.068	0.0604	-0.0897
71	SLD 14	0.07379	-0.14783	-0.08204	0.068	0.0604	-0.0897
71	SLD 15	0.07379	0.14766	-0.08204	-0.0739	0.0604	0.0875
71	SLD 16	0.07379	0.14766	-0.08204	-0.0739	0.0604	0.0875
71	SLV 1	-0.28173	-0.38977	0.13983	0.1841	-0.0201	-0.2348
71	SLV 2	-0.28173	-0.38977	0.13983	0.1841	-0.0201	-0.2348
71	SLV 3	-0.28173	0.38961	0.13983	-0.1899	-0.0201	0.2327
71	SLV 4	-0.28173	0.38961	0.13983	-0.1899	-0.0201	0.2327
71	SLV 5	-0.10982	-1.29905	0.03254	0.6205	0.0188	-0.7802
71	SLV 6	-0.10982	-1.29905	0.03254	0.6205	0.0188	-0.7802
71	SLV 7	-0.10982	1.29888	0.03254	-0.6264	0.0188	0.7781
71	SLV 8	-0.10982	1.29888	0.03254	-0.6264	0.0188	0.7781
71	SLV 9	0.03754	-1.29905	-0.05941	0.6205	0.0522	-0.7802
71	SLV 10	0.03754	-1.29905	-0.05941	0.6205	0.0522	-0.7802
71	SLV 11	0.03754	1.29888	-0.05941	-0.6264	0.0522	0.778
71	SLV 12	0.03754	1.29888	-0.05941	-0.6264	0.0522	0.778
71	SLV 13	0.20945	-0.38977	-0.1667	0.1841	0.0911	-0.2348
71	SLV 14	0.20945	-0.38977	-0.1667	0.1841	0.0911	-0.2348
71	SLV 15	0.20945	0.3896	-0.1667	-0.19	0.0911	0.2327
71	SLV 16	0.20945	0.3896	-0.1667	-0.19	0.0911	0.2327
72	SLU 1	0.03614	-0.00008	-0.01343	-0.0029	-0.0355	0.0011
72	SLU 2	0.03614	-0.00008	-0.01343	-0.0029	-0.0355	0.0011
72	SLU 3	0.03614	-0.00007	-0.01343	-0.003	-0.0355	0.0011
72	SLU 4	0.03614	-0.00006	-0.01343	-0.003	-0.0355	0.0011
72	SLU 5	0.03614	-0.00006	-0.01343	-0.003	-0.0355	0.0011
72	SLU 6	0.04112	-0.00008	-0.01336	-0.003	-0.0397	0.0011
72	SLU 7	0.04112	-0.00008	-0.01336	-0.0031	-0.0397	0.0011
72	SLU 8	0.04112	-0.00007	-0.01336	-0.0031	-0.0397	0.0011
72	SLU 9	0.04112	-0.00006	-0.01336	-0.0031	-0.0397	0.0011
72	SLU 10	0.0461	-0.00009	-0.01329	-0.0031	-0.0438	0.0011
72	SLU 11	0.0461	-0.00009	-0.01329	-0.0031	-0.0438	0.0011
72	SLU 12	0.0461	-0.00008	-0.01329	-0.0032	-0.0438	0.0011

Nodo	Cont.	Spostamento			Rotazione		
Ind.	N.br.	ux	uy	uz	rx	ry	rz
72	SLU 13	0.0461	-0.00008	-0.01329	-0.0032	-0.0438	0.0011
72	SLU 14	0.07579	-0.0002	-0.00784	-0.0034	-0.0653	0.0013
72	SLU 15	0.07579	-0.00019	-0.00784	-0.0034	-0.0653	0.0013
72	SLU 16	0.07579	-0.00018	-0.00784	-0.0034	-0.0653	0.0013
72	SLU 17	0.07579	-0.00018	-0.00784	-0.0034	-0.0653	0.0013
72	SLU 18	0.08077	-0.00021	-0.00777	-0.0035	-0.0695	0.0013
72	SLU 19	0.08077	-0.0002	-0.00777	-0.0035	-0.0695	0.0013
72	SLU 20	0.08077	-0.00019	-0.00777	-0.0035	-0.0695	0.0013
72	SLU 21	0.08077	-0.00018	-0.00777	-0.0035	-0.0695	0.0013
72	SLU 22	0.08575	-0.00021	-0.0077	-0.0036	-0.0736	0.0013
72	SLU 23	0.08575	-0.00021	-0.0077	-0.0036	-0.0736	0.0013
72	SLU 24	0.08575	-0.0002	-0.0077	-0.0036	-0.0736	0.0013
72	SLU 25	0.08575	-0.0002	-0.0077	-0.0036	-0.0736	0.0013
72	SLU 26	0.13526	-0.00039	0.00055	-0.004	-0.11	0.0015
72	SLU 27	0.13526	-0.00039	0.00055	-0.0041	-0.11	0.0015
72	SLU 28	0.13526	-0.00038	0.00055	-0.0041	-0.11	0.0015
72	SLU 29	0.13526	-0.00038	0.00055	-0.0041	-0.11	0.0015
72	SLU 30	0.14024	-0.00039	0.00063	-0.0042	-0.1142	0.0016
72	SLU 31	0.14024	-0.00039	0.00063	-0.0042	-0.1142	0.0016
72	SLU 32	0.14024	-0.00038	0.00063	-0.0042	-0.1142	0.0016
72	SLU 33	0.14024	-0.00038	0.00063	-0.0042	-0.1142	0.0016
72	SLU 34	0.03614	-0.00008	-0.01343	-0.0029	-0.0355	0.0011
72	SLU 35	0.03614	-0.00008	-0.01343	-0.0029	-0.0355	0.0011
72	SLU 36	0.03614	-0.00007	-0.01343	-0.003	-0.0355	0.0011
72	SLU 37	0.03614	-0.00006	-0.01343	-0.003	-0.0355	0.0011
72	SLU 38	0.03614	-0.00006	-0.01343	-0.003	-0.0355	0.0011
72	SLU 39	0.04112	-0.00008	-0.01336	-0.003	-0.0397	0.0011
72	SLU 40	0.04112	-0.00008	-0.01336	-0.0031	-0.0397	0.0011
72	SLU 41	0.04112	-0.00007	-0.01336	-0.0031	-0.0397	0.0011
72	SLU 42	0.04112	-0.00006	-0.01336	-0.0031	-0.0397	0.0011
72	SLU 43	0.0461	-0.00009	-0.01329	-0.0031	-0.0438	0.0011
72	SLU 44	0.0461	-0.00009	-0.01329	-0.0031	-0.0438	0.0011
72	SLU 45	0.0461	-0.00008	-0.01329	-0.0032	-0.0438	0.0011
72	SLU 46	0.0461	-0.00008	-0.01329	-0.0032	-0.0438	0.0011
72	SLU 47	0.07579	-0.0002	-0.00784	-0.0034	-0.0653	0.0013
72	SLU 48	0.07579	-0.00019	-0.00784	-0.0034	-0.0653	0.0013
72	SLU 49	0.07579	-0.00018	-0.00784	-0.0034	-0.0653	0.0013
72	SLU 50	0.07579	-0.00018	-0.00784	-0.0034	-0.0653	0.0013
72	SLU 51	0.08077	-0.00021	-0.00777	-0.0035	-0.0695	0.0013
72	SLU 52	0.08077	-0.0002	-0.00777	-0.0035	-0.0695	0.0013
72	SLU 53	0.08077	-0.00019	-0.00777	-0.0035	-0.0695	0.0013
72	SLU 54	0.08077	-0.00018	-0.00777	-0.0035	-0.0695	0.0013
72	SLU 55	0.08575	-0.00021	-0.0077	-0.0036	-0.0736	0.0013
72	SLU 56	0.08575	-0.00021	-0.0077	-0.0036	-0.0736	0.0013
72	SLU 57	0.08575	-0.0002	-0.0077	-0.0036	-0.0736	0.0013
72	SLU 58	0.08575	-0.0002	-0.0077	-0.0036	-0.0736	0.0013
72	SLU 59	0.13526	-0.00039	0.00055	-0.004	-0.11	0.0015
72	SLU 60	0.13526	-0.00039	0.00055	-0.0041	-0.11	0.0015
72	SLU 61	0.13526	-0.00038	0.00055	-0.0041	-0.11	0.0015
72	SLU 62	0.13526	-0.00038	0.00055	-0.0041	-0.11	0.0015
72	SLU 63	0.14024	-0.00039	0.00063	-0.0042	-0.1142	0.0016
72	SLU 64	0.14024	-0.00039	0.00063	-0.0042	-0.1142	0.0016
72	SLU 65	0.14024	-0.00038	0.00063	-0.0042	-0.1142	0.0016
72	SLU 66	0.14024	-0.00038	0.00063	-0.0042	-0.1142	0.0016
72	SLU 67	0.04698	-0.00011	-0.01747	-0.0038	-0.0462	0.0014
72	SLU 68	0.04698	-0.00011	-0.01747	-0.0038	-0.0462	0.0014
72	SLU 69	0.04698	-0.0001	-0.01747	-0.0038	-0.0462	0.0014
72	SLU 70	0.04698	-0.00009	-0.01747	-0.0038	-0.0462	0.0014
72	SLU 71	0.04698	-0.00009	-0.01747	-0.0039	-0.0462	0.0014
72	SLU 72	0.05196	-0.00011	-0.01739	-0.0039	-0.0503	0.0014
72	SLU 73	0.05196	-0.0001	-0.01739	-0.0039	-0.0503	0.0014
72	SLU 74	0.05196	-0.00009	-0.01739	-0.0039	-0.0503	0.0014
72	SLU 75	0.05196	-0.00009	-0.01739	-0.004	-0.0503	0.0014
72	SLU 76	0.05694	-0.00012	-0.01732	-0.004	-0.0544	0.0015
72	SLU 77	0.05694	-0.00011	-0.01732	-0.004	-0.0544	0.0015
72	SLU 78	0.05694	-0.00011	-0.01732	-0.004	-0.0544	0.0015
72	SLU 79	0.05694	-0.0001	-0.01732	-0.004	-0.0544	0.0015
72	SLU 80	0.08663	-0.00023	-0.01187	-0.0043	-0.076	0.0016
72	SLU 81	0.08663	-0.00022	-0.01187	-0.0043	-0.076	0.0016
72	SLU 82	0.08663	-0.00021	-0.01187	-0.0043	-0.076	0.0016
72	SLU 83	0.08663	-0.00021	-0.01187	-0.0043	-0.076	0.0016
72	SLU 84	0.09161	-0.00023	-0.0118	-0.0044	-0.0801	0.0016
72	SLU 85	0.09161	-0.00022	-0.0118	-0.0044	-0.0801	0.0016
72	SLU 86	0.09161	-0.00021	-0.0118	-0.0044	-0.0801	0.0016
72	SLU 87	0.09161	-0.00021	-0.0118	-0.0044	-0.0801	0.0016
72	SLU 88	0.09659	-0.00024	-0.01173	-0.0045	-0.0842	0.0016
72	SLU 89	0.09659	-0.00024	-0.01173	-0.0045	-0.0842	0.0016
72	SLU 90	0.09659	-0.00023	-0.01173	-0.0045	-0.0842	0.0016
72	SLU 91	0.09659	-0.00023	-0.01173	-0.0045	-0.0842	0.0017
72	SLU 92	0.1461	-0.00041	-0.00348	-0.0049	-0.1207	0.0018
72	SLU 93	0.1461	-0.00041	-0.00348	-0.0049	-0.1207	0.0018
72	SLU 94	0.1461	-0.00041	-0.00348	-0.0049	-0.1207	0.0018
72	SLU 95	0.1461	-0.0004	-0.00348	-0.005	-0.1207	0.0019
72	SLU 96	0.15108	-0.00042	-0.0034	-0.005	-0.1248	0.0019
72	SLU 97	0.15108	-0.00041	-0.0034	-0.005	-0.1248	0.0019
72	SLU 98	0.15108	-0.00041	-0.0034	-0.005	-0.1248	0.0019
72	SLU 99	0.15108	-0.00041	-0.0034	-0.0051	-0.1248	0.0019
72	SLU 100	0.04698	-0.00011	-0.01747	-0.0038	-0.0462	0.0014
72	SLU 101	0.04698	-0.00011	-0.01747	-0.0038	-0.0462	0.0014
72	SLU 102	0.04698	-0.0001	-0.01747	-0.0038	-0.0462	0.0014
72	SLU 103	0.04698	-0.00009	-0.01747	-0.0038	-0.0462	0.0014
72	SLU 104	0.04698	-0.00009	-0.01747	-0.0039	-0.0462	0.0014
72	SLU 105	0.05196	-0.00011	-0.01739	-0.0039	-0.0503	0.0014
72	SLU 106	0.05196	-0.0001	-0.01739	-0.0039	-0.0503	0.0014
72	SLU 107	0.05196	-0.00009	-0.01739	-0.0039	-0.0503	0.0014

Nodo	Cont.	Spostamento			Rotazione		
Ind.	N.br.	ux	uy	uz	rx	ry	rz
72	SLU 108	0.05196	-0.00009	-0.01739	-0.004	-0.0503	0.0014
72	SLU 109	0.05694	-0.00012	-0.01732	-0.004	-0.0544	0.0015
72	SLU 110	0.05694	-0.00011	-0.01732	-0.004	-0.0544	0.0015
72	SLU 111	0.05694	-0.00011	-0.01732	-0.004	-0.0544	0.0015
72	SLU 112	0.05694	-0.0001	-0.01732	-0.004	-0.0544	0.0015
72	SLU 113	0.08663	-0.00023	-0.01187	-0.0043	-0.076	0.0016
72	SLU 114	0.08663	-0.00022	-0.01187	-0.0043	-0.076	0.0016
72	SLU 115	0.08663	-0.00021	-0.01187	-0.0043	-0.076	0.0016
72	SLU 116	0.08663	-0.00021	-0.01187	-0.0043	-0.076	0.0016
72	SLU 117	0.09161	-0.00023	-0.0118	-0.0044	-0.0801	0.0016
72	SLU 118	0.09161	-0.00022	-0.0118	-0.0044	-0.0801	0.0016
72	SLU 119	0.09161	-0.00021	-0.0118	-0.0044	-0.0801	0.0016
72	SLU 120	0.09161	-0.00021	-0.0118	-0.0044	-0.0801	0.0016
72	SLU 121	0.09659	-0.00024	-0.01173	-0.0045	-0.0842	0.0016
72	SLU 122	0.09659	-0.00024	-0.01173	-0.0045	-0.0842	0.0016
72	SLU 123	0.09659	-0.00023	-0.01173	-0.0045	-0.0842	0.0016
72	SLU 124	0.09659	-0.00023	-0.01173	-0.0045	-0.0842	0.0017
72	SLU 125	0.1461	-0.00041	-0.00348	-0.0049	-0.1207	0.0018
72	SLU 126	0.1461	-0.00041	-0.00348	-0.0049	-0.1207	0.0018
72	SLU 127	0.1461	-0.00041	-0.00348	-0.0049	-0.1207	0.0018
72	SLU 128	0.1461	-0.0004	-0.00348	-0.005	-0.1207	0.0019
72	SLU 129	0.15108	-0.00042	-0.0034	-0.005	-0.1248	0.0019
72	SLU 130	0.15108	-0.00041	-0.0034	-0.005	-0.1248	0.0019
72	SLU 131	0.15108	-0.00041	-0.0034	-0.005	-0.1248	0.0019
72	SLU 132	0.15108	-0.00041	-0.0034	-0.0051	-0.1248	0.0019
72	SLE RA 1	0.03614	-0.00008	-0.01343	-0.0029	-0.0355	0.0011
72	SLE RA 2	0.03614	-0.00008	-0.01343	-0.0029	-0.0355	0.0011
72	SLE RA 3	0.03614	-0.00008	-0.01343	-0.003	-0.0355	0.0011
72	SLE RA 4	0.03614	-0.00007	-0.01343	-0.003	-0.0355	0.0011
72	SLE RA 5	0.03614	-0.00007	-0.01343	-0.003	-0.0355	0.0011
72	SLE RA 6	0.03946	-0.00008	-0.01339	-0.003	-0.0383	0.0011
72	SLE RA 7	0.03946	-0.00008	-0.01339	-0.003	-0.0383	0.0011
72	SLE RA 8	0.03946	-0.00007	-0.01339	-0.003	-0.0383	0.0011
72	SLE RA 9	0.03946	-0.00007	-0.01339	-0.003	-0.0383	0.0011
72	SLE RA 10	0.04278	-0.00009	-0.01334	-0.0031	-0.041	0.0011
72	SLE RA 11	0.04278	-0.00009	-0.01334	-0.0031	-0.041	0.0011
72	SLE RA 12	0.04278	-0.00008	-0.01334	-0.0031	-0.041	0.0011
72	SLE RA 13	0.04278	-0.00008	-0.01334	-0.0031	-0.041	0.0011
72	SLE RA 14	0.06257	-0.00016	-0.0097	-0.0032	-0.0554	0.0012
72	SLE RA 15	0.06257	-0.00016	-0.0097	-0.0032	-0.0554	0.0012
72	SLE RA 16	0.06257	-0.00015	-0.0097	-0.0033	-0.0554	0.0012
72	SLE RA 17	0.06257	-0.00015	-0.0097	-0.0033	-0.0554	0.0012
72	SLE RA 18	0.06589	-0.00017	-0.00966	-0.0033	-0.0581	0.0012
72	SLE RA 19	0.06589	-0.00016	-0.00966	-0.0033	-0.0581	0.0012
72	SLE RA 20	0.06589	-0.00015	-0.00966	-0.0033	-0.0581	0.0012
72	SLE RA 21	0.06589	-0.00015	-0.00966	-0.0033	-0.0581	0.0012
72	SLE RA 22	0.06921	-0.00017	-0.00961	-0.0034	-0.0609	0.0012
72	SLE RA 23	0.06921	-0.00017	-0.00961	-0.0034	-0.0609	0.0012
72	SLE RA 24	0.06921	-0.00016	-0.00961	-0.0034	-0.0609	0.0012
72	SLE RA 25	0.06921	-0.00016	-0.00961	-0.0034	-0.0609	0.0012
72	SLE RA 26	0.10222	-0.00029	-0.00411	-0.0037	-0.0852	0.0014
72	SLE RA 27	0.10222	-0.00029	-0.00411	-0.0037	-0.0852	0.0014
72	SLE RA 28	0.10222	-0.00028	-0.00411	-0.0037	-0.0852	0.0014
72	SLE RA 29	0.10222	-0.00028	-0.00411	-0.0037	-0.0852	0.0014
72	SLE RA 30	0.10554	-0.00029	-0.00406	-0.0037	-0.0879	0.0014
72	SLE RA 31	0.10554	-0.00029	-0.00406	-0.0038	-0.0879	0.0014
72	SLE RA 32	0.10554	-0.00028	-0.00406	-0.0038	-0.0879	0.0014
72	SLE RA 33	0.10554	-0.00028	-0.00406	-0.0038	-0.0879	0.0014
72	SLE FR 1	0.03614	-0.00008	-0.01343	-0.0029	-0.0355	0.0011
72	SLE FR 2	0.03614	-0.00008	-0.01343	-0.0029	-0.0355	0.0011
72	SLE FR 3	0.03614	-0.00008	-0.01343	-0.0029	-0.0355	0.0011
72	SLE FR 4	0.03747	-0.00009	-0.01342	-0.003	-0.0366	0.0011
72	SLE FR 5	0.06257	-0.00017	-0.0097	-0.0032	-0.0554	0.0012
72	SLE QP 1	0.03614	-0.00008	-0.01343	-0.0029	-0.0355	0.0011
72	SLO 1	-0.09784	-0.15999	-0.09705	0.0738	-0.0658	0.097
72	SLO 2	-0.09784	-0.15999	-0.09705	0.0738	-0.0658	0.097
72	SLO 3	-0.09784	0.15982	-0.09705	-0.0797	-0.0658	-0.0948
72	SLO 4	-0.09784	0.15982	-0.09705	-0.0797	-0.0658	-0.0948
72	SLO 5	-0.00406	-0.5331	-0.03852	0.2529	-0.0446	0.3208
72	SLO 6	-0.00406	-0.5331	-0.03852	0.2529	-0.0446	0.3208
72	SLO 7	-0.00405	0.53293	-0.03852	-0.2588	-0.0446	-0.3186
72	SLO 8	-0.00405	0.53293	-0.03852	-0.2588	-0.0446	-0.3186
72	SLO 9	0.07633	-0.5331	0.01165	0.2529	-0.0264	0.3208
72	SLO 10	0.07633	-0.5331	0.01165	0.2529	-0.0264	0.3208
72	SLO 11	0.07633	0.53293	0.01165	-0.2587	-0.0264	-0.3186
72	SLO 12	0.07633	0.53293	0.01165	-0.2587	-0.0264	-0.3186
72	SLO 13	0.17012	-0.15999	0.07018	0.0738	-0.0052	0.097
72	SLO 14	0.17012	-0.15999	0.07018	0.0738	-0.0052	0.097
72	SLO 15	0.17012	0.15982	0.07018	-0.0797	-0.0052	-0.0949
72	SLO 16	0.17012	0.15982	0.07018	-0.0797	-0.0052	-0.0949
72	SLD 1	-0.07379	-0.14783	-0.08204	0.068	-0.0604	0.0897
72	SLD 2	-0.07379	-0.14783	-0.08204	0.068	-0.0604	0.0897
72	SLD 3	-0.07379	0.14766	-0.08204	-0.0739	-0.0604	-0.0875
72	SLD 4	-0.07379	0.14766	-0.08204	-0.0739	-0.0604	-0.0875
72	SLD 5	0.00316	-0.49258	-0.03402	0.2334	-0.043	0.2965
72	SLD 6	0.00316	-0.49258	-0.03402	0.2334	-0.043	0.2965
72	SLD 7	0.00316	0.49241	-0.03402	-0.2393	-0.043	-0.2943
72	SLD 8	0.00316	0.49241	-0.03402	-0.2393	-0.043	-0.2943
72	SLD 9	0.06912	-0.49258	0.00715	0.2334	-0.028	0.2965
72	SLD 10	0.06912	-0.49258	0.00715	0.2334	-0.028	0.2965
72	SLD 11	0.06912	0.49241	0.00715	-0.2393	-0.028	-0.2943
72	SLD 12	0.06912	0.49241	0.00715	-0.2393	-0.028	-0.2943
72	SLD 13	0.14607	-0.14783	0.05517	0.068	-0.0106	0.0897
72	SLD 14	0.14607	-0.14783	0.05517	0.068	-0.0106	0.0897
72	SLD 15	0.14607	0.14766	0.05517	-0.0738	-0.0106	-0.0876

Nodo	Cont.	Spostamento			Rotazione		
Ind.	N.br.	ux	uy	uz	rx	ry	rz
72	SLD 16	0.14607	0.14766	0.05517	-0.0738	-0.0106	-0.0876
72	SLV 1	-0.20945	-0.38977	-0.1667	0.1841	-0.0911	0.2348
72	SLV 2	-0.20945	-0.38977	-0.1667	0.1841	-0.0911	0.2348
72	SLV 3	-0.20945	0.3896	-0.1667	-0.19	-0.0911	-0.2327
72	SLV 4	-0.20945	0.3896	-0.1667	-0.19	-0.0911	-0.2327
72	SLV 5	-0.03754	-1.29905	-0.05941	0.6205	-0.0522	0.7802
72	SLV 6	-0.03754	-1.29905	-0.05941	0.6205	-0.0522	0.7802
72	SLV 7	-0.03754	1.29888	-0.05941	-0.6264	-0.0522	-0.778
72	SLV 8	-0.03754	1.29888	-0.05941	-0.6264	-0.0522	-0.778
72	SLV 9	0.10982	-1.29905	0.03254	0.6205	-0.0188	0.7802
72	SLV 10	0.10982	-1.29905	0.03254	0.6205	-0.0188	0.7802
72	SLV 11	0.10982	1.29888	0.03254	-0.6264	-0.0188	-0.7781
72	SLV 12	0.10982	1.29888	0.03254	-0.6264	-0.0188	-0.7781
72	SLV 13	0.28173	-0.38977	0.13983	0.1841	0.0201	0.2348
72	SLV 14	0.28173	-0.38977	0.13983	0.1841	0.0201	0.2348
72	SLV 15	0.28173	0.38961	0.13983	-0.1899	0.0201	-0.2327
72	SLV 16	0.28173	0.38961	0.13983	-0.1899	0.0201	-0.2327
73	SLU 1	-0.03613	-0.00006	-0.01344	-0.0009	0.0355	-0.0003
73	SLU 2	-0.03614	-0.00006	-0.01344	-0.0009	0.0355	-0.0003
73	SLU 3	-0.03614	-0.00005	-0.01344	-0.0009	0.0355	-0.0003
73	SLU 4	-0.03613	-0.00004	-0.01344	-0.0009	0.0355	-0.0003
73	SLU 5	-0.03614	-0.00003	-0.01344	-0.0009	0.0355	-0.0003
73	SLU 6	-0.03964	-0.00006	-0.01372	-0.0009	0.0388	-0.0003
73	SLU 7	-0.03964	-0.00005	-0.01372	-0.001	0.0388	-0.0003
73	SLU 8	-0.03964	-0.00004	-0.01372	-0.001	0.0388	-0.0003
73	SLU 9	-0.03964	-0.00004	-0.01372	-0.001	0.0388	-0.0003
73	SLU 10	-0.04315	-0.00006	-0.014	-0.001	0.042	-0.0003
73	SLU 11	-0.04315	-0.00006	-0.014	-0.001	0.042	-0.0003
73	SLU 12	-0.04315	-0.00005	-0.014	-0.001	0.042	-0.0003
73	SLU 13	-0.04315	-0.00005	-0.014	-0.001	0.042	-0.0003
73	SLU 14	-0.05765	-0.00017	-0.01117	-0.0009	0.0524	-0.0003
73	SLU 15	-0.05765	-0.00016	-0.01117	-0.001	0.0524	-0.0003
73	SLU 16	-0.05765	-0.00015	-0.01117	-0.001	0.0524	-0.0003
73	SLU 17	-0.05765	-0.00015	-0.01117	-0.001	0.0524	-0.0003
73	SLU 18	-0.06116	-0.00018	-0.01145	-0.001	0.0557	-0.0003
73	SLU 19	-0.06116	-0.00017	-0.01145	-0.001	0.0557	-0.0003
73	SLU 20	-0.06116	-0.00016	-0.01145	-0.001	0.0557	-0.0003
73	SLU 21	-0.06116	-0.00015	-0.01145	-0.001	0.0557	-0.0003
73	SLU 22	-0.06466	-0.00018	-0.01173	-0.001	0.0589	-0.0003
73	SLU 23	-0.06467	-0.00018	-0.01173	-0.001	0.0589	-0.0003
73	SLU 24	-0.06466	-0.00017	-0.01173	-0.001	0.0589	-0.0003
73	SLU 25	-0.06467	-0.00017	-0.01173	-0.001	0.0589	-0.0003
73	SLU 26	-0.08993	-0.00035	-0.00777	-0.001	0.0777	-0.0004
73	SLU 27	-0.08993	-0.00035	-0.00776	-0.001	0.0777	-0.0004
73	SLU 28	-0.08993	-0.00034	-0.00777	-0.001	0.0777	-0.0004
73	SLU 29	-0.08993	-0.00034	-0.00776	-0.001	0.0777	-0.0004
73	SLU 30	-0.09344	-0.00035	-0.00805	-0.001	0.081	-0.0004
73	SLU 31	-0.09344	-0.00035	-0.00805	-0.001	0.081	-0.0004
73	SLU 32	-0.09344	-0.00035	-0.00805	-0.001	0.081	-0.0004
73	SLU 33	-0.09344	-0.00034	-0.00805	-0.001	0.081	-0.0004
73	SLU 34	-0.03613	-0.00006	-0.01344	-0.0009	0.0355	-0.0003
73	SLU 35	-0.03614	-0.00006	-0.01344	-0.0009	0.0355	-0.0003
73	SLU 36	-0.03614	-0.00005	-0.01344	-0.0009	0.0355	-0.0003
73	SLU 37	-0.03613	-0.00004	-0.01344	-0.0009	0.0355	-0.0003
73	SLU 38	-0.03614	-0.00003	-0.01344	-0.0009	0.0355	-0.0003
73	SLU 39	-0.03964	-0.00006	-0.01372	-0.0009	0.0388	-0.0003
73	SLU 40	-0.03964	-0.00005	-0.01372	-0.001	0.0388	-0.0003
73	SLU 41	-0.03964	-0.00004	-0.01372	-0.001	0.0388	-0.0003
73	SLU 42	-0.03964	-0.00004	-0.01372	-0.001	0.0388	-0.0003
73	SLU 43	-0.04315	-0.00006	-0.014	-0.001	0.042	-0.0003
73	SLU 44	-0.04315	-0.00006	-0.014	-0.001	0.042	-0.0003
73	SLU 45	-0.04315	-0.00005	-0.014	-0.001	0.042	-0.0003
73	SLU 46	-0.04315	-0.00005	-0.014	-0.001	0.042	-0.0003
73	SLU 47	-0.05765	-0.00017	-0.01117	-0.0009	0.0524	-0.0003
73	SLU 48	-0.05765	-0.00016	-0.01117	-0.001	0.0524	-0.0003
73	SLU 49	-0.05765	-0.00015	-0.01117	-0.001	0.0524	-0.0003
73	SLU 50	-0.05765	-0.00015	-0.01117	-0.001	0.0524	-0.0003
73	SLU 51	-0.06116	-0.00018	-0.01145	-0.001	0.0557	-0.0003
73	SLU 52	-0.06116	-0.00017	-0.01145	-0.001	0.0557	-0.0003
73	SLU 53	-0.06116	-0.00016	-0.01145	-0.001	0.0557	-0.0003
73	SLU 54	-0.06116	-0.00015	-0.01145	-0.001	0.0557	-0.0003
73	SLU 55	-0.06466	-0.00018	-0.01173	-0.001	0.0589	-0.0003
73	SLU 56	-0.06467	-0.00018	-0.01173	-0.001	0.0589	-0.0003
73	SLU 57	-0.06466	-0.00017	-0.01173	-0.001	0.0589	-0.0003
73	SLU 58	-0.06467	-0.00017	-0.01173	-0.001	0.0589	-0.0003
73	SLU 59	-0.08993	-0.00035	-0.00777	-0.001	0.0777	-0.0004
73	SLU 60	-0.08993	-0.00035	-0.00776	-0.001	0.0777	-0.0004
73	SLU 61	-0.08993	-0.00034	-0.00777	-0.001	0.0777	-0.0004
73	SLU 62	-0.08993	-0.00034	-0.00776	-0.001	0.0777	-0.0004
73	SLU 63	-0.09344	-0.00035	-0.00805	-0.001	0.081	-0.0004
73	SLU 64	-0.09344	-0.00035	-0.00805	-0.001	0.081	-0.0004
73	SLU 65	-0.09344	-0.00035	-0.00805	-0.001	0.081	-0.0004
73	SLU 66	-0.09344	-0.00034	-0.00805	-0.001	0.081	-0.0004
73	SLU 67	-0.04697	-0.00008	-0.01747	-0.0012	0.0462	-0.0004
73	SLU 68	-0.04698	-0.00007	-0.01747	-0.0012	0.0462	-0.0004
73	SLU 69	-0.04698	-0.00007	-0.01747	-0.0012	0.0462	-0.0004
73	SLU 70	-0.04697	-0.00006	-0.01747	-0.0012	0.0462	-0.0004
73	SLU 71	-0.04697	-0.00005	-0.01747	-0.0012	0.0462	-0.0004
73	SLU 72	-0.05048	-0.00008	-0.01775	-0.0012	0.0494	-0.0004
73	SLU 73	-0.05048	-0.00007	-0.01775	-0.0012	0.0494	-0.0004
73	SLU 74	-0.05048	-0.00006	-0.01775	-0.0012	0.0494	-0.0004
73	SLU 75	-0.05048	-0.00005	-0.01775	-0.0012	0.0494	-0.0004
73	SLU 76	-0.05399	-0.00008	-0.01803	-0.0012	0.0527	-0.0004
73	SLU 77	-0.05399	-0.00008	-0.01803	-0.0012	0.0527	-0.0004
73	SLU 78	-0.05399	-0.00007	-0.01803	-0.0013	0.0527	-0.0004

Nodo	Cont.	Spostamento			Rotazione		
Ind.	N.br.	ux	uy	uz	rx	ry	rz
73	SLU 79	-0.05399	-0.00007	-0.01803	-0.0013	0.0527	-0.0004
73	SLU 80	-0.06849	-0.00019	-0.0152	-0.0012	0.0631	-0.0004
73	SLU 81	-0.06849	-0.00018	-0.0152	-0.0012	0.0631	-0.0004
73	SLU 82	-0.06849	-0.00017	-0.0152	-0.0012	0.063	-0.0004
73	SLU 83	-0.06849	-0.00017	-0.0152	-0.0012	0.0631	-0.0004
73	SLU 84	-0.072	-0.00019	-0.01548	-0.0012	0.0663	-0.0004
73	SLU 85	-0.072	-0.00018	-0.01548	-0.0013	0.0663	-0.0004
73	SLU 86	-0.072	-0.00017	-0.01548	-0.0013	0.0663	-0.0004
73	SLU 87	-0.072	-0.00017	-0.01548	-0.0013	0.0663	-0.0004
73	SLU 88	-0.0755	-0.0002	-0.01576	-0.0013	0.0696	-0.0004
73	SLU 89	-0.07551	-0.0002	-0.01576	-0.0013	0.0696	-0.0004
73	SLU 90	-0.0755	-0.00019	-0.01576	-0.0013	0.0696	-0.0004
73	SLU 91	-0.07551	-0.00019	-0.01576	-0.0013	0.0696	-0.0004
73	SLU 92	-0.10077	-0.00037	-0.0118	-0.0013	0.0884	-0.0004
73	SLU 93	-0.10077	-0.00037	-0.0118	-0.0013	0.0884	-0.0004
73	SLU 94	-0.10077	-0.00036	-0.0118	-0.0013	0.0884	-0.0004
73	SLU 95	-0.10077	-0.00036	-0.0118	-0.0013	0.0884	-0.0004
73	SLU 96	-0.10428	-0.00037	-0.01208	-0.0013	0.0916	-0.0004
73	SLU 97	-0.10428	-0.00037	-0.01208	-0.0013	0.0916	-0.0004
73	SLU 98	-0.10428	-0.00036	-0.01208	-0.0013	0.0916	-0.0005
73	SLU 99	-0.10428	-0.00036	-0.01208	-0.0013	0.0916	-0.0005
73	SLU 100	-0.04697	-0.00008	-0.01747	-0.0012	0.0462	-0.0004
73	SLU 101	-0.04698	-0.00007	-0.01747	-0.0012	0.0462	-0.0004
73	SLU 102	-0.04698	-0.00007	-0.01747	-0.0012	0.0462	-0.0004
73	SLU 103	-0.04697	-0.00006	-0.01747	-0.0012	0.0462	-0.0004
73	SLU 104	-0.04697	-0.00005	-0.01747	-0.0012	0.0462	-0.0004
73	SLU 105	-0.05048	-0.00008	-0.01775	-0.0012	0.0494	-0.0004
73	SLU 106	-0.05048	-0.00007	-0.01775	-0.0012	0.0494	-0.0004
73	SLU 107	-0.05048	-0.00006	-0.01775	-0.0012	0.0494	-0.0004
73	SLU 108	-0.05048	-0.00005	-0.01775	-0.0012	0.0494	-0.0004
73	SLU 109	-0.05399	-0.00008	-0.01803	-0.0012	0.0527	-0.0004
73	SLU 110	-0.05399	-0.00008	-0.01803	-0.0012	0.0527	-0.0004
73	SLU 111	-0.05399	-0.00007	-0.01803	-0.0013	0.0527	-0.0004
73	SLU 112	-0.05399	-0.00007	-0.01803	-0.0013	0.0527	-0.0004
73	SLU 113	-0.06849	-0.00019	-0.0152	-0.0012	0.0631	-0.0004
73	SLU 114	-0.06849	-0.00018	-0.0152	-0.0012	0.0631	-0.0004
73	SLU 115	-0.06849	-0.00017	-0.0152	-0.0012	0.063	-0.0004
73	SLU 116	-0.06849	-0.00017	-0.0152	-0.0012	0.0631	-0.0004
73	SLU 117	-0.072	-0.00019	-0.01548	-0.0012	0.0663	-0.0004
73	SLU 118	-0.072	-0.00018	-0.01548	-0.0013	0.0663	-0.0004
73	SLU 119	-0.072	-0.00017	-0.01548	-0.0013	0.0663	-0.0004
73	SLU 120	-0.072	-0.00017	-0.01548	-0.0013	0.0663	-0.0004
73	SLU 121	-0.0755	-0.0002	-0.01576	-0.0013	0.0696	-0.0004
73	SLU 122	-0.07551	-0.0002	-0.01576	-0.0013	0.0696	-0.0004
73	SLU 123	-0.0755	-0.00019	-0.01576	-0.0013	0.0696	-0.0004
73	SLU 124	-0.07551	-0.00019	-0.01576	-0.0013	0.0696	-0.0004
73	SLU 125	-0.10077	-0.00037	-0.0118	-0.0013	0.0884	-0.0004
73	SLU 126	-0.10077	-0.00037	-0.0118	-0.0013	0.0884	-0.0004
73	SLU 127	-0.10077	-0.00036	-0.0118	-0.0013	0.0884	-0.0004
73	SLU 128	-0.10077	-0.00036	-0.0118	-0.0013	0.0884	-0.0004
73	SLU 129	-0.10428	-0.00037	-0.01208	-0.0013	0.0916	-0.0004
73	SLU 130	-0.10428	-0.00037	-0.01208	-0.0013	0.0916	-0.0004
73	SLU 131	-0.10428	-0.00036	-0.01208	-0.0013	0.0916	-0.0005
73	SLU 132	-0.10428	-0.00036	-0.01208	-0.0013	0.0916	-0.0005
73	SLE RA 1	-0.03613	-0.00006	-0.01344	-0.0009	0.0355	-0.0003
73	SLE RA 2	-0.03613	-0.00006	-0.01344	-0.0009	0.0355	-0.0003
73	SLE RA 3	-0.03613	-0.00005	-0.01344	-0.0009	0.0355	-0.0003
73	SLE RA 4	-0.03613	-0.00004	-0.01344	-0.0009	0.0355	-0.0003
73	SLE RA 5	-0.03613	-0.00004	-0.01344	-0.0009	0.0355	-0.0003
73	SLE RA 6	-0.03847	-0.00006	-0.01362	-0.0009	0.0377	-0.0003
73	SLE RA 7	-0.03847	-0.00005	-0.01362	-0.0009	0.0377	-0.0003
73	SLE RA 8	-0.03847	-0.00005	-0.01363	-0.001	0.0377	-0.0003
73	SLE RA 9	-0.03847	-0.00004	-0.01363	-0.001	0.0377	-0.0003
73	SLE RA 10	-0.04081	-0.00006	-0.01381	-0.001	0.0399	-0.0003
73	SLE RA 11	-0.04081	-0.00006	-0.01381	-0.001	0.0399	-0.0003
73	SLE RA 12	-0.04081	-0.00006	-0.01381	-0.001	0.0399	-0.0003
73	SLE RA 13	-0.04081	-0.00005	-0.01381	-0.001	0.0399	-0.0003
73	SLE RA 14	-0.05048	-0.00014	-0.01192	-0.0009	0.0468	-0.0003
73	SLE RA 15	-0.05048	-0.00013	-0.01192	-0.0009	0.0468	-0.0003
73	SLE RA 16	-0.05048	-0.00012	-0.01193	-0.001	0.0468	-0.0003
73	SLE RA 17	-0.05048	-0.00012	-0.01192	-0.001	0.0468	-0.0003
73	SLE RA 18	-0.05282	-0.00014	-0.01211	-0.001	0.0489	-0.0003
73	SLE RA 19	-0.05282	-0.00013	-0.01211	-0.001	0.0489	-0.0003
73	SLE RA 20	-0.05282	-0.00012	-0.01211	-0.001	0.0489	-0.0003
73	SLE RA 21	-0.05282	-0.00012	-0.01211	-0.001	0.0489	-0.0003
73	SLE RA 22	-0.05515	-0.00014	-0.0123	-0.001	0.0511	-0.0003
73	SLE RA 23	-0.05516	-0.00014	-0.0123	-0.001	0.0511	-0.0003
73	SLE RA 24	-0.05515	-0.00013	-0.0123	-0.001	0.0511	-0.0003
73	SLE RA 25	-0.05516	-0.00013	-0.0123	-0.001	0.0511	-0.0003
73	SLE RA 26	-0.072	-0.00026	-0.00966	-0.001	0.0637	-0.0003
73	SLE RA 27	-0.072	-0.00025	-0.00966	-0.001	0.0637	-0.0003
73	SLE RA 28	-0.072	-0.00025	-0.00966	-0.001	0.0637	-0.0003
73	SLE RA 29	-0.072	-0.00025	-0.00966	-0.001	0.0637	-0.0003
73	SLE RA 30	-0.07433	-0.00026	-0.00984	-0.001	0.0658	-0.0003
73	SLE RA 31	-0.07434	-0.00025	-0.00984	-0.001	0.0658	-0.0003
73	SLE RA 32	-0.07433	-0.00025	-0.00984	-0.001	0.0658	-0.0003
73	SLE RA 33	-0.07434	-0.00025	-0.00984	-0.001	0.0658	-0.0003
73	SLE FR 1	-0.03613	-0.00006	-0.01344	-0.0009	0.0355	-0.0003
73	SLE FR 2	-0.03613	-0.00006	-0.01344	-0.0009	0.0355	-0.0003
73	SLE FR 3	-0.03613	-0.00005	-0.01344	-0.0009	0.0355	-0.0003
73	SLE FR 4	-0.03707	-0.00006	-0.01351	-0.0009	0.0364	-0.0003
73	SLE FR 5	-0.05048	-0.00014	-0.01193	-0.0009	0.0468	-0.0003
73	SLE QP 1	-0.03613	-0.00006	-0.01344	-0.0009	0.0355	-0.0003
73	SLO 1	-0.16998	-0.15996	0.07009	0.0758	0.0052	-0.0963
73	SLO 2	-0.16998	-0.15996	0.07009	0.0758	0.0052	-0.0963

Nodo	Cont.	Spostamento			Rotazione		
Ind.	N.br.	ux	uy	uz	rx	ry	rz
73	SLO 3	-0.16998	0.15984	0.07009	-0.0776	0.0052	0.0957
73	SLO 4	-0.16998	0.15984	0.07009	-0.0776	0.0052	0.0957
73	SLO 5	-0.07629	-0.53305	0.01162	0.2547	0.0264	-0.3202
73	SLO 6	-0.07629	-0.53305	0.01162	0.2547	0.0264	-0.3202
73	SLO 7	-0.07629	0.53293	0.01162	-0.2565	0.0264	0.3196
73	SLO 8	-0.07629	0.53293	0.01162	-0.2565	0.0264	0.3196
73	SLO 9	0.00402	-0.53305	-0.0385	0.2547	0.0446	-0.3202
73	SLO 10	0.00402	-0.53305	-0.0385	0.2547	0.0446	-0.3202
73	SLO 11	0.00402	0.53293	-0.0385	-0.2565	0.0446	0.3196
73	SLO 12	0.00402	0.53293	-0.0385	-0.2565	0.0446	0.3196
73	SLO 13	0.09771	-0.15996	-0.09696	0.0758	0.0658	-0.0963
73	SLO 14	0.09771	-0.15996	-0.09696	0.0758	0.0658	-0.0963
73	SLO 15	0.09771	0.15984	-0.09696	-0.0776	0.0658	0.0957
73	SLO 16	0.09771	0.15984	-0.09696	-0.0776	0.0658	0.0957
73	SLD 1	-0.14596	-0.1478	0.0551	0.0699	0.0107	-0.089
73	SLD 2	-0.14596	-0.1478	0.0551	0.0699	0.0107	-0.089
73	SLD 3	-0.14596	0.14768	0.0551	-0.0718	0.0107	0.0884
73	SLD 4	-0.14596	0.14768	0.0551	-0.0718	0.0107	0.0884
73	SLD 5	-0.06908	-0.49254	0.00712	0.2352	0.028	-0.2959
73	SLD 6	-0.06908	-0.49254	0.00712	0.2352	0.028	-0.2959
73	SLD 7	-0.06908	0.49242	0.00712	-0.2371	0.028	0.2953
73	SLD 8	-0.06908	0.49242	0.00712	-0.2371	0.028	0.2953
73	SLD 9	-0.00319	-0.49254	-0.034	0.2352	0.043	-0.2959
73	SLD 10	-0.00319	-0.49254	-0.034	0.2352	0.043	-0.2959
73	SLD 11	-0.00319	0.49242	-0.034	-0.2371	0.043	0.2953
73	SLD 12	-0.00319	0.49242	-0.034	-0.2371	0.043	0.2953
73	SLD 13	0.07369	-0.1478	-0.08197	0.0699	0.0603	-0.089
73	SLD 14	0.07369	-0.1478	-0.08197	0.0699	0.0603	-0.089
73	SLD 15	0.07369	0.14768	-0.08197	-0.0718	0.0603	0.0884
73	SLD 16	0.07369	0.14768	-0.08197	-0.0718	0.0603	0.0884
73	SLV 1	-0.28148	-0.38974	0.13967	0.1859	-0.02	-0.2342
73	SLV 2	-0.28148	-0.38974	0.13967	0.1859	-0.02	-0.2342
73	SLV 3	-0.28148	0.38961	0.13967	-0.1878	-0.02	0.2336
73	SLV 4	-0.28148	0.38961	0.13967	-0.1878	-0.02	0.2336
73	SLV 5	-0.10974	-1.29898	0.0325	0.6219	0.0189	-0.7799
73	SLV 6	-0.10974	-1.29898	0.0325	0.6219	0.0189	-0.7799
73	SLV 7	-0.10974	1.29886	0.0325	-0.6237	0.0189	0.7793
73	SLV 8	-0.10974	1.29886	0.0325	-0.6237	0.0189	0.7793
73	SLV 9	0.03747	-1.29898	-0.05937	0.6219	0.0522	-0.7799
73	SLV 10	0.03747	-1.29898	-0.05937	0.6219	0.0522	-0.7799
73	SLV 11	0.03747	1.29886	-0.05937	-0.6237	0.0522	0.7793
73	SLV 12	0.03747	1.29886	-0.05937	-0.6237	0.0522	0.7793
73	SLV 13	0.20922	-0.38973	-0.16655	0.1859	0.091	-0.2342
73	SLV 14	0.20922	-0.38973	-0.16655	0.1859	0.091	-0.2342
73	SLV 15	0.20922	0.38962	-0.16655	-0.1878	0.091	0.2336
73	SLV 16	0.20922	0.38962	-0.16655	-0.1878	0.091	0.2336
74	SLU 1	0.03613	-0.00006	-0.01344	-0.0009	-0.0355	0.0003
74	SLU 2	0.03614	-0.00006	-0.01344	-0.0009	-0.0355	0.0003
74	SLU 3	0.03614	-0.00005	-0.01344	-0.0009	-0.0355	0.0003
74	SLU 4	0.03613	-0.00004	-0.01344	-0.0009	-0.0355	0.0003
74	SLU 5	0.03614	-0.00003	-0.01344	-0.0009	-0.0355	0.0003
74	SLU 6	0.03983	-0.00006	-0.01359	-0.0009	-0.0387	0.0003
74	SLU 7	0.03983	-0.00005	-0.01359	-0.001	-0.0387	0.0003
74	SLU 8	0.03983	-0.00004	-0.01359	-0.001	-0.0387	0.0003
74	SLU 9	0.03983	-0.00004	-0.01359	-0.001	-0.0387	0.0003
74	SLU 10	0.04353	-0.00006	-0.01375	-0.001	-0.0419	0.0003
74	SLU 11	0.04353	-0.00006	-0.01375	-0.001	-0.0419	0.0003
74	SLU 12	0.04353	-0.00006	-0.01375	-0.001	-0.0419	0.0003
74	SLU 13	0.04353	-0.00005	-0.01375	-0.001	-0.0419	0.0003
74	SLU 14	0.05797	-0.00017	-0.01096	-0.0009	-0.0523	0.0003
74	SLU 15	0.05797	-0.00016	-0.01096	-0.001	-0.0523	0.0003
74	SLU 16	0.05797	-0.00015	-0.01096	-0.001	-0.0523	0.0003
74	SLU 17	0.05797	-0.00015	-0.01096	-0.001	-0.0523	0.0003
74	SLU 18	0.06167	-0.00018	-0.01111	-0.001	-0.0555	0.0003
74	SLU 19	0.06167	-0.00017	-0.01111	-0.001	-0.0555	0.0003
74	SLU 20	0.06167	-0.00016	-0.01111	-0.001	-0.0555	0.0003
74	SLU 21	0.06167	-0.00015	-0.01111	-0.001	-0.0555	0.0003
74	SLU 22	0.06536	-0.00018	-0.01127	-0.001	-0.0587	0.0003
74	SLU 23	0.06537	-0.00018	-0.01127	-0.001	-0.0587	0.0003
74	SLU 24	0.06536	-0.00017	-0.01127	-0.001	-0.0587	0.0003
74	SLU 25	0.06537	-0.00017	-0.01127	-0.001	-0.0587	0.0003
74	SLU 26	0.09073	-0.00035	-0.00724	-0.001	-0.0775	0.0003
74	SLU 27	0.09073	-0.00035	-0.00724	-0.001	-0.0775	0.0003
74	SLU 28	0.09073	-0.00034	-0.00724	-0.001	-0.0775	0.0004
74	SLU 29	0.09073	-0.00034	-0.00724	-0.001	-0.0775	0.0004
74	SLU 30	0.09442	-0.00036	-0.00739	-0.001	-0.0807	0.0004
74	SLU 31	0.09443	-0.00035	-0.00739	-0.001	-0.0807	0.0004
74	SLU 32	0.09442	-0.00035	-0.00739	-0.001	-0.0807	0.0004
74	SLU 33	0.09443	-0.00034	-0.00739	-0.001	-0.0807	0.0004
74	SLU 34	0.03613	-0.00006	-0.01344	-0.0009	-0.0355	0.0003
74	SLU 35	0.03614	-0.00006	-0.01344	-0.0009	-0.0355	0.0003
74	SLU 36	0.03614	-0.00005	-0.01344	-0.0009	-0.0355	0.0003
74	SLU 37	0.03613	-0.00004	-0.01344	-0.0009	-0.0355	0.0003
74	SLU 38	0.03614	-0.00003	-0.01344	-0.0009	-0.0355	0.0003
74	SLU 39	0.03983	-0.00006	-0.01359	-0.0009	-0.0387	0.0003
74	SLU 40	0.03983	-0.00005	-0.01359	-0.001	-0.0387	0.0003
74	SLU 41	0.03983	-0.00004	-0.01359	-0.001	-0.0387	0.0003
74	SLU 42	0.03983	-0.00004	-0.01359	-0.001	-0.0387	0.0003
74	SLU 43	0.04353	-0.00006	-0.01375	-0.001	-0.0419	0.0003
74	SLU 44	0.04353	-0.00006	-0.01375	-0.001	-0.0419	0.0003
74	SLU 45	0.04353	-0.00006	-0.01375	-0.001	-0.0419	0.0003
74	SLU 46	0.04353	-0.00005	-0.01375	-0.001	-0.0419	0.0003
74	SLU 47	0.05797	-0.00017	-0.01096	-0.0009	-0.0523	0.0003
74	SLU 48	0.05797	-0.00016	-0.01096	-0.001	-0.0523	0.0003
74	SLU 49	0.05797	-0.00015	-0.01096	-0.001	-0.0523	0.0003

Nodo	Cont.	Spostamento			Rotazione		
Ind.	N.br.	ux	uy	uz	rx	ry	rz
74	SLU 50	0.05797	-0.00015	-0.01096	-0.001	-0.0523	0.0003
74	SLU 51	0.06167	-0.00018	-0.01111	-0.001	-0.0555	0.0003
74	SLU 52	0.06167	-0.00017	-0.01111	-0.001	-0.0555	0.0003
74	SLU 53	0.06167	-0.00016	-0.01111	-0.001	-0.0555	0.0003
74	SLU 54	0.06167	-0.00015	-0.01111	-0.001	-0.0555	0.0003
74	SLU 55	0.06536	-0.00018	-0.01127	-0.001	-0.0587	0.0003
74	SLU 56	0.06537	-0.00018	-0.01127	-0.001	-0.0587	0.0003
74	SLU 57	0.06536	-0.00017	-0.01127	-0.001	-0.0587	0.0003
74	SLU 58	0.06537	-0.00017	-0.01127	-0.001	-0.0587	0.0003
74	SLU 59	0.09073	-0.00035	-0.00724	-0.001	-0.0775	0.0003
74	SLU 60	0.09073	-0.00035	-0.00724	-0.001	-0.0775	0.0003
74	SLU 61	0.09073	-0.00034	-0.00724	-0.001	-0.0775	0.0004
74	SLU 62	0.09073	-0.00034	-0.00724	-0.001	-0.0775	0.0004
74	SLU 63	0.09442	-0.00036	-0.00739	-0.001	-0.0807	0.0004
74	SLU 64	0.09443	-0.00035	-0.00739	-0.001	-0.0807	0.0004
74	SLU 65	0.09442	-0.00035	-0.00739	-0.001	-0.0807	0.0004
74	SLU 66	0.09443	-0.00034	-0.00739	-0.001	-0.0807	0.0004
74	SLU 67	0.04697	-0.00008	-0.01747	-0.0012	-0.0462	0.0004
74	SLU 68	0.04698	-0.00007	-0.01747	-0.0012	-0.0462	0.0004
74	SLU 69	0.04698	-0.00007	-0.01747	-0.0012	-0.0462	0.0004
74	SLU 70	0.04697	-0.00006	-0.01747	-0.0012	-0.0462	0.0004
74	SLU 71	0.04697	-0.00005	-0.01747	-0.0012	-0.0462	0.0004
74	SLU 72	0.05067	-0.00008	-0.01762	-0.0012	-0.0494	0.0004
74	SLU 73	0.05067	-0.00007	-0.01762	-0.0012	-0.0494	0.0004
74	SLU 74	0.05067	-0.00006	-0.01762	-0.0012	-0.0494	0.0004
74	SLU 75	0.05067	-0.00005	-0.01762	-0.0012	-0.0494	0.0004
74	SLU 76	0.05437	-0.00008	-0.01778	-0.0012	-0.0526	0.0004
74	SLU 77	0.05437	-0.00008	-0.01778	-0.0012	-0.0526	0.0004
74	SLU 78	0.05437	-0.00007	-0.01778	-0.0013	-0.0526	0.0004
74	SLU 79	0.05437	-0.00007	-0.01778	-0.0013	-0.0526	0.0004
74	SLU 80	0.06881	-0.00019	-0.01499	-0.0012	-0.063	0.0004
74	SLU 81	0.06881	-0.00018	-0.01499	-0.0012	-0.063	0.0004
74	SLU 82	0.06881	-0.00017	-0.01499	-0.0012	-0.063	0.0004
74	SLU 83	0.06881	-0.00017	-0.01499	-0.0012	-0.063	0.0004
74	SLU 84	0.07251	-0.00019	-0.01514	-0.0012	-0.0662	0.0004
74	SLU 85	0.07251	-0.00018	-0.01514	-0.0013	-0.0662	0.0004
74	SLU 86	0.07251	-0.00017	-0.01514	-0.0013	-0.0662	0.0004
74	SLU 87	0.07251	-0.00017	-0.01514	-0.0013	-0.0662	0.0004
74	SLU 88	0.0762	-0.0002	-0.0153	-0.0013	-0.0694	0.0004
74	SLU 89	0.07621	-0.0002	-0.0153	-0.0013	-0.0694	0.0004
74	SLU 90	0.0762	-0.00019	-0.0153	-0.0013	-0.0694	0.0004
74	SLU 91	0.07621	-0.00019	-0.0153	-0.0013	-0.0694	0.0004
74	SLU 92	0.10157	-0.00037	-0.01127	-0.0013	-0.0882	0.0004
74	SLU 93	0.10157	-0.00037	-0.01127	-0.0013	-0.0882	0.0004
74	SLU 94	0.10157	-0.00036	-0.01127	-0.0013	-0.0882	0.0004
74	SLU 95	0.10157	-0.00036	-0.01127	-0.0013	-0.0882	0.0004
74	SLU 96	0.10526	-0.00037	-0.01142	-0.0013	-0.0914	0.0004
74	SLU 97	0.10527	-0.00037	-0.01142	-0.0013	-0.0914	0.0004
74	SLU 98	0.10526	-0.00036	-0.01142	-0.0013	-0.0914	0.0005
74	SLU 99	0.10527	-0.00036	-0.01142	-0.0013	-0.0914	0.0005
74	SLU 100	0.04697	-0.00008	-0.01747	-0.0012	-0.0462	0.0004
74	SLU 101	0.04698	-0.00007	-0.01747	-0.0012	-0.0462	0.0004
74	SLU 102	0.04698	-0.00007	-0.01747	-0.0012	-0.0462	0.0004
74	SLU 103	0.04697	-0.00006	-0.01747	-0.0012	-0.0462	0.0004
74	SLU 104	0.04697	-0.00005	-0.01747	-0.0012	-0.0462	0.0004
74	SLU 105	0.05067	-0.00008	-0.01762	-0.0012	-0.0494	0.0004
74	SLU 106	0.05067	-0.00007	-0.01762	-0.0012	-0.0494	0.0004
74	SLU 107	0.05067	-0.00006	-0.01762	-0.0012	-0.0494	0.0004
74	SLU 108	0.05067	-0.00005	-0.01762	-0.0012	-0.0494	0.0004
74	SLU 109	0.05437	-0.00008	-0.01778	-0.0012	-0.0526	0.0004
74	SLU 110	0.05437	-0.00008	-0.01778	-0.0012	-0.0526	0.0004
74	SLU 111	0.05437	-0.00007	-0.01778	-0.0013	-0.0526	0.0004
74	SLU 112	0.05437	-0.00007	-0.01778	-0.0013	-0.0526	0.0004
74	SLU 113	0.06881	-0.00019	-0.01499	-0.0012	-0.063	0.0004
74	SLU 114	0.06881	-0.00018	-0.01499	-0.0012	-0.063	0.0004
74	SLU 115	0.06881	-0.00017	-0.01499	-0.0012	-0.063	0.0004
74	SLU 116	0.06881	-0.00017	-0.01499	-0.0012	-0.063	0.0004
74	SLU 117	0.07251	-0.00019	-0.01514	-0.0012	-0.0662	0.0004
74	SLU 118	0.07251	-0.00018	-0.01514	-0.0013	-0.0662	0.0004
74	SLU 119	0.07251	-0.00017	-0.01514	-0.0013	-0.0662	0.0004
74	SLU 120	0.07251	-0.00017	-0.01514	-0.0013	-0.0662	0.0004
74	SLU 121	0.0762	-0.0002	-0.0153	-0.0013	-0.0694	0.0004
74	SLU 122	0.07621	-0.0002	-0.0153	-0.0013	-0.0694	0.0004
74	SLU 123	0.0762	-0.00019	-0.0153	-0.0013	-0.0694	0.0004
74	SLU 124	0.07621	-0.00019	-0.0153	-0.0013	-0.0694	0.0004
74	SLU 125	0.10157	-0.00037	-0.01127	-0.0013	-0.0882	0.0004
74	SLU 126	0.10157	-0.00037	-0.01127	-0.0013	-0.0882	0.0004
74	SLU 127	0.10157	-0.00036	-0.01127	-0.0013	-0.0882	0.0004
74	SLU 128	0.10157	-0.00036	-0.01127	-0.0013	-0.0882	0.0004
74	SLU 129	0.10526	-0.00037	-0.01142	-0.0013	-0.0914	0.0004
74	SLU 130	0.10527	-0.00037	-0.01142	-0.0013	-0.0914	0.0004
74	SLU 131	0.10526	-0.00036	-0.01142	-0.0013	-0.0914	0.0005
74	SLU 132	0.10527	-0.00036	-0.01142	-0.0013	-0.0914	0.0005
74	SLE RA 1	0.03613	-0.00006	-0.01344	-0.0009	-0.0355	0.0003
74	SLE RA 2	0.03613	-0.00006	-0.01344	-0.0009	-0.0355	0.0003
74	SLE RA 3	0.03613	-0.00005	-0.01344	-0.0009	-0.0355	0.0003
74	SLE RA 4	0.03613	-0.00004	-0.01344	-0.0009	-0.0355	0.0003
74	SLE RA 5	0.03613	-0.00004	-0.01344	-0.0009	-0.0355	0.0003
74	SLE RA 6	0.0386	-0.00006	-0.01354	-0.0009	-0.0376	0.0003
74	SLE RA 7	0.0386	-0.00005	-0.01354	-0.0009	-0.0376	0.0003
74	SLE RA 8	0.0386	-0.00005	-0.01354	-0.001	-0.0376	0.0003
74	SLE RA 9	0.0386	-0.00004	-0.01354	-0.001	-0.0376	0.0003
74	SLE RA 10	0.04106	-0.00006	-0.01364	-0.001	-0.0398	0.0003
74	SLE RA 11	0.04106	-0.00006	-0.01364	-0.001	-0.0398	0.0003
74	SLE RA 12	0.04106	-0.00006	-0.01364	-0.001	-0.0398	0.0003

Nodo	Cont.	Spostamento			Rotazione		
Ind.	N.br.	ux	uy	uz	rx	ry	rz
74	SLE RA 13	0.04106	-0.00005	-0.01364	-0.001	-0.0398	0.0003
74	SLE RA 14	0.05069	-0.00014	-0.01178	-0.0009	-0.0467	0.0003
74	SLE RA 15	0.05069	-0.00013	-0.01178	-0.0009	-0.0467	0.0003
74	SLE RA 16	0.05069	-0.00012	-0.01178	-0.001	-0.0467	0.0003
74	SLE RA 17	0.05069	-0.00012	-0.01178	-0.001	-0.0467	0.0003
74	SLE RA 18	0.05316	-0.00014	-0.01189	-0.0009	-0.0488	0.0003
74	SLE RA 19	0.05316	-0.00013	-0.01189	-0.001	-0.0488	0.0003
74	SLE RA 20	0.05316	-0.00012	-0.01189	-0.001	-0.0488	0.0003
74	SLE RA 21	0.05316	-0.00012	-0.01189	-0.001	-0.0488	0.0003
74	SLE RA 22	0.05562	-0.00014	-0.01199	-0.001	-0.051	0.0003
74	SLE RA 23	0.05562	-0.00014	-0.01199	-0.001	-0.051	0.0003
74	SLE RA 24	0.05562	-0.00013	-0.01199	-0.001	-0.051	0.0003
74	SLE RA 25	0.05562	-0.00013	-0.01199	-0.001	-0.051	0.0003
74	SLE RA 26	0.07253	-0.00026	-0.0093	-0.001	-0.0635	0.0003
74	SLE RA 27	0.07253	-0.00025	-0.0093	-0.001	-0.0635	0.0003
74	SLE RA 28	0.07253	-0.00025	-0.0093	-0.001	-0.0635	0.0003
74	SLE RA 29	0.07253	-0.00025	-0.0093	-0.001	-0.0635	0.0003
74	SLE RA 30	0.07499	-0.00026	-0.00941	-0.001	-0.0656	0.0003
74	SLE RA 31	0.07499	-0.00026	-0.00941	-0.001	-0.0656	0.0003
74	SLE RA 32	0.07499	-0.00025	-0.00941	-0.001	-0.0656	0.0003
74	SLE RA 33	0.07499	-0.00025	-0.00941	-0.001	-0.0656	0.0003
74	SLE FR 1	0.03613	-0.00006	-0.01344	-0.0009	-0.0355	0.0003
74	SLE FR 2	0.03613	-0.00006	-0.01344	-0.0009	-0.0355	0.0003
74	SLE FR 3	0.03613	-0.00005	-0.01344	-0.0009	-0.0355	0.0003
74	SLE FR 4	0.03712	-0.00006	-0.01348	-0.0009	-0.0364	0.0003
74	SLE FR 5	0.05069	-0.00014	-0.01178	-0.0009	-0.0467	0.0003
74	SLE QP 1	0.03613	-0.00006	-0.01344	-0.0009	-0.0355	0.0003
74	SLO 1	-0.09771	-0.15996	-0.09696	0.0758	-0.0658	0.0963
74	SLO 2	-0.09771	-0.15996	-0.09696	0.0758	-0.0658	0.0963
74	SLO 3	-0.09771	0.15984	-0.09696	-0.0776	-0.0658	-0.0957
74	SLO 4	-0.09771	0.15984	-0.09696	-0.0776	-0.0658	-0.0957
74	SLO 5	-0.00402	-0.53305	-0.0385	0.2547	-0.0446	0.3202
74	SLO 6	-0.00402	-0.53305	-0.0385	0.2547	-0.0446	0.3202
74	SLO 7	-0.00402	0.53293	-0.0385	-0.2565	-0.0446	-0.3196
74	SLO 8	-0.00402	0.53293	-0.0385	-0.2565	-0.0446	-0.3196
74	SLO 9	0.07629	-0.53305	0.01162	0.2547	-0.0264	0.3202
74	SLO 10	0.07629	-0.53305	0.01162	0.2547	-0.0264	0.3202
74	SLO 11	0.07629	0.53293	0.01162	-0.2565	-0.0264	-0.3196
74	SLO 12	0.07629	0.53293	0.01162	-0.2565	-0.0264	-0.3196
74	SLO 13	0.16998	-0.15996	0.07009	0.0758	-0.0052	0.0963
74	SLO 14	0.16998	-0.15996	0.07009	0.0758	-0.0052	0.0963
74	SLO 15	0.16998	0.15984	0.07009	-0.0776	-0.0052	-0.0957
74	SLO 16	0.16998	0.15984	0.07009	-0.0776	-0.0052	-0.0957
74	SLD 1	-0.07369	-0.1478	-0.08197	0.0699	-0.0603	0.089
74	SLD 2	-0.07369	-0.1478	-0.08197	0.0699	-0.0603	0.089
74	SLD 3	-0.07369	0.14768	-0.08197	-0.0718	-0.0603	-0.0884
74	SLD 4	-0.07369	0.14768	-0.08197	-0.0718	-0.0603	-0.0884
74	SLD 5	0.00319	-0.49254	-0.034	0.2352	-0.043	0.2959
74	SLD 6	0.00319	-0.49254	-0.034	0.2352	-0.043	0.2959
74	SLD 7	0.00319	0.49242	-0.034	-0.2371	-0.043	-0.2953
74	SLD 8	0.00319	0.49242	-0.034	-0.2371	-0.043	-0.2953
74	SLD 9	0.06908	-0.49254	0.00712	0.2352	-0.028	0.2959
74	SLD 10	0.06908	-0.49254	0.00712	0.2352	-0.028	0.2959
74	SLD 11	0.06908	0.49242	0.00712	-0.2371	-0.028	-0.2953
74	SLD 12	0.06908	0.49242	0.00712	-0.2371	-0.028	-0.2953
74	SLD 13	0.14596	-0.1478	0.0551	0.0699	-0.0107	0.089
74	SLD 14	0.14596	-0.1478	0.0551	0.0699	-0.0107	0.089
74	SLD 15	0.14596	0.14768	0.0551	-0.0718	-0.0107	-0.0884
74	SLD 16	0.14596	0.14768	0.0551	-0.0718	-0.0107	-0.0884
74	SLV 1	-0.20922	-0.38973	-0.16655	0.1859	-0.091	0.2342
74	SLV 2	-0.20922	-0.38973	-0.16655	0.1859	-0.091	0.2342
74	SLV 3	-0.20922	0.38962	-0.16655	-0.1878	-0.091	-0.2336
74	SLV 4	-0.20922	0.38962	-0.16655	-0.1878	-0.091	-0.2336
74	SLV 5	-0.03747	-1.29898	-0.05937	0.6219	-0.0522	0.7799
74	SLV 6	-0.03747	-1.29898	-0.05937	0.6219	-0.0522	0.7799
74	SLV 7	-0.03747	1.29886	-0.05937	-0.6237	-0.0522	-0.7793
74	SLV 8	-0.03747	1.29886	-0.05937	-0.6237	-0.0522	-0.7793
74	SLV 9	0.10974	-1.29898	0.0325	0.6219	-0.0189	0.7799
74	SLV 10	0.10974	-1.29898	0.0325	0.6219	-0.0189	0.7799
74	SLV 11	0.10974	1.29886	0.0325	-0.6237	-0.0189	-0.7793
74	SLV 12	0.10974	1.29886	0.0325	-0.6237	-0.0189	-0.7793
74	SLV 13	0.28148	-0.38974	0.13967	0.1859	0.02	0.2342
74	SLV 14	0.28148	-0.38974	0.13967	0.1859	0.02	0.2342
74	SLV 15	0.28148	0.38961	0.13967	-0.1878	0.02	-0.2336
74	SLV 16	0.28148	0.38961	0.13967	-0.1878	0.02	-0.2336
75	SLU 1	0.00113	-0.00003	-0.02076	-0.0002	0.0143	-0.0001
75	SLU 2	-0.01695	-0.00003	-0.04851	-0.0002	0.0647	-0.0001
75	SLU 3	-0.01695	-0.00002	-0.04851	-0.0002	0.0647	-0.0001
75	SLU 4	0.00113	-0.00001	-0.02076	-0.0003	0.0143	-0.0001
75	SLU 5	-0.01243	-0.00001	-0.04157	-0.0003	0.0521	-0.0001
75	SLU 6	-0.01702	-0.00003	-0.04949	-0.0002	0.0656	-0.0001
75	SLU 7	-0.01702	-0.00002	-0.04949	-0.0003	0.0656	-0.0001
75	SLU 8	0.00105	-0.00001	-0.02173	-0.0003	0.0152	-0.0001
75	SLU 9	-0.0125	-0.00001	-0.04255	-0.0003	0.053	-0.0001
75	SLU 10	0.00097	-0.00004	-0.02271	-0.0002	0.0161	-0.0001
75	SLU 11	-0.01258	-0.00003	-0.04352	-0.0002	0.0539	-0.0001
75	SLU 12	0.00097	-0.00003	-0.02271	-0.0003	0.0161	-0.0001
75	SLU 13	-0.01258	-0.00002	-0.04352	-0.0003	0.0539	-0.0001
75	SLU 14	-0.01686	-0.00014	-0.0498	-0.0001	0.0656	0
75	SLU 15	-0.01686	-0.00013	-0.0498	-0.0001	0.0656	0
75	SLU 16	0.00121	-0.00012	-0.02205	-0.0002	0.0152	0
75	SLU 17	-0.01234	-0.00012	-0.04286	-0.0002	0.053	0
75	SLU 18	-0.01693	-0.00014	-0.05077	-0.0001	0.0665	0
75	SLU 19	-0.01693	-0.00014	-0.05077	-0.0001	0.0665	0
75	SLU 20	0.00114	-0.00012	-0.02302	-0.0002	0.0161	0

Nodo	Cont.	Spostamento			Rotazione		
Ind.	N.br.	ux	uy	uz	rx	ry	rz
75	SLU 21	-0.01242	-0.00012	-0.04384	-0.0002	0.0539	0
75	SLU 22	0.00106	-0.00015	-0.024	-0.0001	0.017	0
75	SLU 23	-0.01249	-0.00015	-0.04481	-0.0001	0.0549	0
75	SLU 24	0.00106	-0.00014	-0.024	-0.0001	0.017	0
75	SLU 25	-0.01249	-0.00014	-0.04481	-0.0001	0.0549	0
75	SLU 26	0.00135	-0.00031	-0.02398	0.0001	0.0166	0
75	SLU 27	-0.01221	-0.00031	-0.0448	0	0.0544	0
75	SLU 28	0.00135	-0.00031	-0.02398	0	0.0166	0
75	SLU 29	-0.01221	-0.0003	-0.0448	0	0.0544	0
75	SLU 30	0.00127	-0.00032	-0.02496	0	0.0175	0
75	SLU 31	-0.01228	-0.00031	-0.04577	0	0.0553	0
75	SLU 32	0.00127	-0.00031	-0.02496	0	0.0175	0
75	SLU 33	-0.01228	-0.0003	-0.04577	0	0.0553	0
75	SLU 34	0.00113	-0.00003	-0.02076	-0.0002	0.0143	-0.0001
75	SLU 35	-0.01695	-0.00003	-0.04851	-0.0002	0.0647	-0.0001
75	SLU 36	-0.01695	-0.00002	-0.04851	-0.0002	0.0647	-0.0001
75	SLU 37	0.00113	-0.00001	-0.02076	-0.0003	0.0143	-0.0001
75	SLU 38	-0.01243	-0.00001	-0.04157	-0.0003	0.0521	-0.0001
75	SLU 39	-0.01702	-0.00003	-0.04949	-0.0002	0.0656	-0.0001
75	SLU 40	-0.01702	-0.00002	-0.04949	-0.0003	0.0656	-0.0001
75	SLU 41	0.00105	-0.00001	-0.02173	-0.0003	0.0152	-0.0001
75	SLU 42	-0.0125	-0.00001	-0.04255	-0.0003	0.053	-0.0001
75	SLU 43	0.00097	-0.00004	-0.02271	-0.0002	0.0161	-0.0001
75	SLU 44	-0.01258	-0.00003	-0.04352	-0.0002	0.0539	-0.0001
75	SLU 45	0.00097	-0.00003	-0.02271	-0.0003	0.0161	-0.0001
75	SLU 46	-0.01258	-0.00002	-0.04352	-0.0003	0.0539	-0.0001
75	SLU 47	-0.01686	-0.00014	-0.0498	-0.0001	0.0656	0
75	SLU 48	-0.01686	-0.00013	-0.0498	-0.0001	0.0656	0
75	SLU 49	0.00121	-0.00012	-0.02205	-0.0002	0.0152	0
75	SLU 50	-0.01234	-0.00012	-0.04286	-0.0002	0.053	0
75	SLU 51	-0.01693	-0.00014	-0.05077	-0.0001	0.0665	0
75	SLU 52	-0.01693	-0.00014	-0.05077	-0.0001	0.0665	0
75	SLU 53	0.00114	-0.00012	-0.02302	-0.0002	0.0161	0
75	SLU 54	-0.01242	-0.00012	-0.04384	-0.0002	0.0539	0
75	SLU 55	0.00106	-0.00015	-0.024	-0.0001	0.017	0
75	SLU 56	-0.01249	-0.00015	-0.04481	-0.0001	0.0549	0
75	SLU 57	0.00106	-0.00014	-0.024	-0.0001	0.017	0
75	SLU 58	-0.01249	-0.00014	-0.04481	-0.0001	0.0549	0
75	SLU 59	0.00135	-0.00031	-0.02398	0.0001	0.0166	0
75	SLU 60	-0.01221	-0.00031	-0.0448	0	0.0544	0
75	SLU 61	0.00135	-0.00031	-0.02398	0	0.0166	0
75	SLU 62	-0.01221	-0.0003	-0.0448	0	0.0544	0
75	SLU 63	0.00127	-0.00032	-0.02496	0	0.0175	0
75	SLU 64	-0.01228	-0.00031	-0.04577	0	0.0553	0
75	SLU 65	0.00127	-0.00031	-0.02496	0	0.0175	0
75	SLU 66	-0.01228	-0.0003	-0.04577	0	0.0553	0
75	SLU 67	0.00146	-0.00004	-0.02699	-0.0003	0.0186	-0.0001
75	SLU 68	-0.01661	-0.00004	-0.05474	-0.0003	0.069	-0.0001
75	SLU 69	-0.01661	-0.00003	-0.05474	-0.0003	0.069	-0.0001
75	SLU 70	0.00146	-0.00002	-0.02699	-0.0003	0.0186	-0.0001
75	SLU 71	-0.01209	-0.00002	-0.0478	-0.0003	0.0564	-0.0001
75	SLU 72	-0.01668	-0.00004	-0.05571	-0.0003	0.0699	-0.0001
75	SLU 73	-0.01668	-0.00003	-0.05571	-0.0003	0.0699	-0.0001
75	SLU 74	0.00139	-0.00002	-0.02796	-0.0003	0.0195	-0.0001
75	SLU 75	-0.01217	-0.00002	-0.04877	-0.0003	0.0573	-0.0001
75	SLU 76	0.00131	-0.00005	-0.02893	-0.0003	0.0204	-0.0001
75	SLU 77	-0.01224	-0.00004	-0.04975	-0.0003	0.0582	-0.0001
75	SLU 78	0.00131	-0.00004	-0.02893	-0.0003	0.0204	-0.0001
75	SLU 79	-0.01224	-0.00003	-0.04975	-0.0003	0.0582	-0.0001
75	SLU 80	-0.01652	-0.00015	-0.05603	-0.0002	0.0699	0
75	SLU 81	-0.01652	-0.00014	-0.05603	-0.0002	0.0699	0
75	SLU 82	0.00155	-0.00013	-0.02828	-0.0002	0.0195	0
75	SLU 83	-0.012	-0.00013	-0.04909	-0.0002	0.0573	-0.0001
75	SLU 84	-0.0166	-0.00015	-0.057	-0.0002	0.0708	0
75	SLU 85	-0.0166	-0.00014	-0.057	-0.0002	0.0708	0
75	SLU 86	0.00147	-0.00013	-0.02925	-0.0002	0.0204	-0.0001
75	SLU 87	-0.01208	-0.00013	-0.05006	-0.0002	0.0582	-0.0001
75	SLU 88	0.0014	-0.00016	-0.03022	-0.0002	0.0213	0
75	SLU 89	-0.01215	-0.00016	-0.05104	-0.0002	0.0591	0
75	SLU 90	0.0014	-0.00015	-0.03022	-0.0002	0.0213	0
75	SLU 91	-0.01215	-0.00015	-0.05104	-0.0002	0.0591	-0.0001
75	SLU 92	0.00168	-0.00032	-0.03021	0	0.0209	0
75	SLU 93	-0.01187	-0.00032	-0.05103	0	0.0587	0
75	SLU 94	0.00168	-0.00032	-0.03021	0	0.0209	0
75	SLU 95	-0.01187	-0.00031	-0.05103	0	0.0587	0
75	SLU 96	0.00161	-0.00033	-0.03118	0	0.0218	0
75	SLU 97	-0.01195	-0.00032	-0.052	0	0.0596	0
75	SLU 98	0.00161	-0.00032	-0.03118	0	0.0218	0
75	SLU 99	-0.01195	-0.00031	-0.052	0	0.0596	0
75	SLU 100	0.00146	-0.00004	-0.02699	-0.0003	0.0186	-0.0001
75	SLU 101	-0.01661	-0.00004	-0.05474	-0.0003	0.069	-0.0001
75	SLU 102	-0.01661	-0.00003	-0.05474	-0.0003	0.069	-0.0001
75	SLU 103	0.00146	-0.00002	-0.02699	-0.0003	0.0186	-0.0001
75	SLU 104	-0.01209	-0.00002	-0.0478	-0.0003	0.0564	-0.0001
75	SLU 105	-0.01668	-0.00004	-0.05571	-0.0003	0.0699	-0.0001
75	SLU 106	-0.01668	-0.00003	-0.05571	-0.0003	0.0699	-0.0001
75	SLU 107	0.00139	-0.00002	-0.02796	-0.0003	0.0195	-0.0001
75	SLU 108	-0.01217	-0.00002	-0.04877	-0.0003	0.0573	-0.0001
75	SLU 109	0.00131	-0.00005	-0.02893	-0.0003	0.0204	-0.0001
75	SLU 110	-0.01224	-0.00004	-0.04975	-0.0003	0.0582	-0.0001
75	SLU 111	0.00131	-0.00004	-0.02893	-0.0003	0.0204	-0.0001
75	SLU 112	-0.01224	-0.00003	-0.04975	-0.0003	0.0582	-0.0001
75	SLU 113	-0.01652	-0.00015	-0.05603	-0.0002	0.0699	0
75	SLU 114	-0.01652	-0.00014	-0.05603	-0.0002	0.0699	0
75	SLU 115	0.00155	-0.00013	-0.02828	-0.0002	0.0195	0

Nodo	Cont.	Spostamento			Rotazione		
Ind.	N.br.	ux	uy	uz	rx	ry	rz
75	SLU 116	-0.012	-0.00013	-0.04909	-0.0002	0.0573	-0.0001
75	SLU 117	-0.0166	-0.00015	-0.057	-0.0002	0.0708	0
75	SLU 118	-0.0166	-0.00014	-0.057	-0.0002	0.0708	0
75	SLU 119	0.00147	-0.00013	-0.02925	-0.0002	0.0204	-0.0001
75	SLU 120	-0.01208	-0.00013	-0.05006	-0.0002	0.0582	-0.0001
75	SLU 121	0.0014	-0.00016	-0.03022	-0.0002	0.0213	0
75	SLU 122	-0.01215	-0.00016	-0.05104	-0.0002	0.0591	0
75	SLU 123	0.0014	-0.00015	-0.03022	-0.0002	0.0213	0
75	SLU 124	-0.01215	-0.00015	-0.05104	-0.0002	0.0591	-0.0001
75	SLU 125	0.00168	-0.00032	-0.03021	0	0.0209	0
75	SLU 126	-0.01187	-0.00032	-0.05103	0	0.0587	0
75	SLU 127	0.00168	-0.00032	-0.03021	0	0.0209	0
75	SLU 128	-0.01187	-0.00031	-0.05103	0	0.0587	0
75	SLU 129	0.00161	-0.00033	-0.03118	0	0.0218	0
75	SLU 130	-0.01195	-0.00032	-0.052	0	0.0596	0
75	SLU 131	0.00161	-0.00032	-0.03118	0	0.0218	0
75	SLU 132	-0.01195	-0.00031	-0.052	0	0.0596	0
75	SLE RA 1	0.00113	-0.00003	-0.02076	-0.0002	0.0143	-0.0001
75	SLE RA 2	-0.01092	-0.00003	-0.03926	-0.0002	0.0479	-0.0001
75	SLE RA 3	-0.01092	-0.00003	-0.03926	-0.0002	0.0479	-0.0001
75	SLE RA 4	0.00113	-0.00002	-0.02076	-0.0003	0.0143	-0.0001
75	SLE RA 5	-0.00791	-0.00002	-0.03464	-0.0003	0.0395	-0.0001
75	SLE RA 6	-0.01097	-0.00003	-0.03991	-0.0002	0.0485	-0.0001
75	SLE RA 7	-0.01097	-0.00003	-0.03991	-0.0002	0.0485	-0.0001
75	SLE RA 8	0.00107	-0.00002	-0.02141	-0.0003	0.0149	-0.0001
75	SLE RA 9	-0.00796	-0.00002	-0.03528	-0.0003	0.0401	-0.0001
75	SLE RA 10	0.00102	-0.00003	-0.02206	-0.0002	0.0155	-0.0001
75	SLE RA 11	-0.00801	-0.00003	-0.03593	-0.0002	0.0407	-0.0001
75	SLE RA 12	0.00102	-0.00003	-0.02206	-0.0003	0.0155	-0.0001
75	SLE RA 13	-0.00801	-0.00003	-0.03593	-0.0003	0.0407	-0.0001
75	SLE RA 14	-0.01086	-0.00011	-0.04012	-0.0002	0.0485	0
75	SLE RA 15	-0.01086	-0.0001	-0.04012	-0.0002	0.0485	0
75	SLE RA 16	0.00118	-0.00009	-0.02162	-0.0002	0.0149	0
75	SLE RA 17	-0.00785	-0.00009	-0.0355	-0.0002	0.0401	0
75	SLE RA 18	-0.01091	-0.00011	-0.04077	-0.0002	0.0491	0
75	SLE RA 19	-0.01091	-0.0001	-0.04077	-0.0002	0.0491	0
75	SLE RA 20	0.00113	-0.00009	-0.02227	-0.0002	0.0155	0
75	SLE RA 21	-0.0079	-0.00009	-0.03614	-0.0002	0.0407	0
75	SLE RA 22	0.00108	-0.00011	-0.02292	-0.0002	0.0161	0
75	SLE RA 23	-0.00795	-0.00011	-0.03679	-0.0002	0.0413	0
75	SLE RA 24	0.00108	-0.0001	-0.02292	-0.0002	0.0161	0
75	SLE RA 25	-0.00795	-0.0001	-0.03679	-0.0002	0.0413	0
75	SLE RA 26	0.00127	-0.00022	-0.02291	0	0.0158	0
75	SLE RA 27	-0.00776	-0.00022	-0.03678	0	0.041	0
75	SLE RA 28	0.00127	-0.00021	-0.02291	-0.0001	0.0158	0
75	SLE RA 29	-0.00776	-0.00021	-0.03678	-0.0001	0.041	0
75	SLE RA 30	0.00122	-0.00022	-0.02356	0	0.0164	0
75	SLE RA 31	-0.00781	-0.00022	-0.03743	0	0.0416	0
75	SLE RA 32	0.00122	-0.00022	-0.02356	-0.0001	0.0164	0
75	SLE RA 33	-0.00781	-0.00021	-0.03743	-0.0001	0.0416	0
75	SLE FR 1	0.00113	-0.00003	-0.02076	-0.0002	0.0143	-0.0001
75	SLE FR 2	-0.00791	-0.00003	-0.03464	-0.0002	0.0395	-0.0001
75	SLE FR 3	0.00113	-0.00003	-0.02076	-0.0002	0.0143	-0.0001
75	SLE FR 4	0.0011	-0.00003	-0.02102	-0.0002	0.0145	-0.0001
75	SLE FR 5	0.00118	-0.00011	-0.02162	-0.0002	0.0149	0
75	SLE QP 1	0.00113	-0.00003	-0.02076	-0.0002	0.0143	-0.0001
75	SLO 1	-0.01011	-0.15992	-0.01481	0.0772	0.0141	-0.0956
75	SLO 2	-0.01011	-0.15992	-0.01481	0.0772	0.0141	-0.0956
75	SLO 3	-0.01011	0.15986	-0.01481	-0.0776	0.0141	0.0955
75	SLO 4	-0.01011	0.15986	-0.01481	-0.0776	0.0141	0.0955
75	SLO 5	-0.00224	-0.533	-0.01897	0.2578	0.0142	-0.3184
75	SLO 6	-0.00224	-0.533	-0.01897	0.2578	0.0142	-0.3184
75	SLO 7	-0.00224	0.53293	-0.01897	-0.2582	0.0142	0.3183
75	SLO 8	-0.00224	0.53293	-0.01897	-0.2582	0.0142	0.3183
75	SLO 9	0.00449	-0.533	-0.02255	0.2578	0.0144	-0.3184
75	SLO 10	0.00449	-0.533	-0.02255	0.2578	0.0144	-0.3184
75	SLO 11	0.00449	0.53293	-0.02255	-0.2582	0.0144	0.3183
75	SLO 12	0.00449	0.53293	-0.02255	-0.2582	0.0144	0.3183
75	SLO 13	0.01236	-0.15992	-0.02671	0.0772	0.0145	-0.0956
75	SLO 14	0.01236	-0.15992	-0.02671	0.0772	0.0145	-0.0956
75	SLO 15	0.01236	0.15986	-0.02671	-0.0776	0.0145	0.0955
75	SLO 16	0.01236	0.15986	-0.02671	-0.0776	0.0145	0.0955
75	SLD 1	-0.00811	-0.14777	-0.01586	0.0713	0.0141	-0.0883
75	SLD 2	-0.00811	-0.14777	-0.01586	0.0713	0.0141	-0.0883
75	SLD 3	-0.00811	0.1477	-0.01586	-0.0717	0.0141	0.0882
75	SLD 4	-0.00811	0.1477	-0.01586	-0.0717	0.0141	0.0882
75	SLD 5	-0.00165	-0.49248	-0.01929	0.2382	0.0142	-0.2942
75	SLD 6	-0.00165	-0.49248	-0.01929	0.2382	0.0142	-0.2942
75	SLD 7	-0.00165	0.49242	-0.01929	-0.2386	0.0142	0.2941
75	SLD 8	-0.00165	0.49242	-0.01929	-0.2386	0.0142	0.2941
75	SLD 9	0.0039	-0.49248	-0.02223	0.2382	0.0143	-0.2942
75	SLD 10	0.0039	-0.49248	-0.02223	0.2382	0.0143	-0.2942
75	SLD 11	0.0039	0.49242	-0.02223	-0.2386	0.0143	0.2941
75	SLD 12	0.0039	0.49242	-0.02223	-0.2386	0.0143	0.2941
75	SLD 13	0.01036	-0.14777	-0.02565	0.0713	0.0145	-0.0883
75	SLD 14	0.01036	-0.14777	-0.02565	0.0713	0.0145	-0.0883
75	SLD 15	0.01036	0.1477	-0.02565	-0.0717	0.0145	0.0882
75	SLD 16	0.01036	0.1477	-0.02565	-0.0717	0.0145	0.0882
75	SLV 1	-0.01877	-0.38969	-0.01021	0.1884	0.0139	-0.2328
75	SLV 2	-0.01877	-0.38969	-0.01021	0.1884	0.0139	-0.2328
75	SLV 3	-0.01877	0.38962	-0.01021	-0.1888	0.0139	0.2327
75	SLV 4	-0.01877	0.38962	-0.01021	-0.1888	0.0139	0.2327
75	SLV 5	-0.00484	-1.29888	-0.0176	0.6285	0.0142	-0.7759
75	SLV 6	-0.00484	-1.29888	-0.0176	0.6285	0.0142	-0.7759
75	SLV 7	-0.00484	1.29881	-0.0176	-0.629	0.0142	0.7758

Nodo	Cont.	Spostamento			Rotazione		
Ind.	N.br.	ux	uy	uz	rx	ry	rz
75	SLV 8	-0.00484	1.29881	-0.0176	-0.629	0.0142	0.7758
75	SLV 9	0.00709	-1.29888	-0.02392	0.6285	0.0144	-0.7759
75	SLV 10	0.00709	-1.29888	-0.02392	0.6285	0.0144	-0.7759
75	SLV 11	0.00709	1.29881	-0.02392	-0.629	0.0144	0.7758
75	SLV 12	0.00709	1.29881	-0.02392	-0.629	0.0144	0.7758
75	SLV 13	0.02102	-0.38969	-0.03131	0.1884	0.0147	-0.2328
75	SLV 14	0.02102	-0.38969	-0.03131	0.1884	0.0147	-0.2328
75	SLV 15	0.02102	0.38962	-0.03131	-0.1889	0.0147	0.2327
75	SLV 16	0.02102	0.38962	-0.03131	-0.1889	0.0147	0.2327
76	SLU 1	-0.00113	-0.00003	-0.02076	-0.0002	-0.0143	0.0001
76	SLU 2	0.01695	-0.00003	-0.04851	-0.0002	-0.0647	0.0001
76	SLU 3	0.01695	-0.00002	-0.04851	-0.0002	-0.0647	0.0001
76	SLU 4	-0.00113	-0.00001	-0.02076	-0.0003	-0.0143	0.0001
76	SLU 5	0.01243	-0.00001	-0.04157	-0.0003	-0.0521	0.0001
76	SLU 6	0.01702	-0.00003	-0.04948	-0.0002	-0.0656	0.0001
76	SLU 7	0.01702	-0.00002	-0.04948	-0.0003	-0.0656	0.0001
76	SLU 8	-0.00105	-0.00001	-0.02173	-0.0003	-0.0152	0.0001
76	SLU 9	0.01251	-0.00001	-0.04255	-0.0003	-0.053	0.0001
76	SLU 10	-0.00097	-0.00004	-0.0227	-0.0002	-0.0161	0.0001
76	SLU 11	0.01258	-0.00003	-0.04352	-0.0002	-0.0539	0.0001
76	SLU 12	-0.00097	-0.00003	-0.0227	-0.0003	-0.0161	0.0001
76	SLU 13	0.01258	-0.00002	-0.04352	-0.0003	-0.0539	0.0001
76	SLU 14	0.01686	-0.00014	-0.0498	-0.0001	-0.0656	0
76	SLU 15	0.01686	-0.00013	-0.0498	-0.0001	-0.0656	0
76	SLU 16	-0.00121	-0.00012	-0.02205	-0.0002	-0.0152	0
76	SLU 17	0.01234	-0.00012	-0.04286	-0.0002	-0.053	0
76	SLU 18	0.01694	-0.00014	-0.05077	-0.0001	-0.0665	0
76	SLU 19	0.01694	-0.00014	-0.05077	-0.0001	-0.0665	0
76	SLU 20	-0.00113	-0.00012	-0.02302	-0.0002	-0.0161	0
76	SLU 21	0.01242	-0.00012	-0.04383	-0.0002	-0.0539	0
76	SLU 22	-0.00106	-0.00015	-0.02399	-0.0001	-0.017	0
76	SLU 23	0.0125	-0.00015	-0.04481	-0.0001	-0.0548	0
76	SLU 24	-0.00106	-0.00014	-0.02399	-0.0001	-0.017	0
76	SLU 25	0.0125	-0.00014	-0.04481	-0.0001	-0.0548	0
76	SLU 26	-0.00134	-0.00032	-0.02398	0.0001	-0.0166	0
76	SLU 27	0.01221	-0.00031	-0.04479	0.0001	-0.0544	0
76	SLU 28	-0.00134	-0.00031	-0.02398	0	-0.0166	0
76	SLU 29	0.01221	-0.0003	-0.04479	0	-0.0544	0
76	SLU 30	-0.00126	-0.00032	-0.02495	0	-0.0175	0
76	SLU 31	0.01229	-0.00031	-0.04576	0	-0.0553	0
76	SLU 32	-0.00126	-0.00031	-0.02495	0	-0.0175	0
76	SLU 33	0.01229	-0.00031	-0.04576	0	-0.0553	0
76	SLU 34	-0.00113	-0.00003	-0.02076	-0.0002	-0.0143	0.0001
76	SLU 35	0.01695	-0.00003	-0.04851	-0.0002	-0.0647	0.0001
76	SLU 36	0.01695	-0.00002	-0.04851	-0.0002	-0.0647	0.0001
76	SLU 37	-0.00113	-0.00001	-0.02076	-0.0003	-0.0143	0.0001
76	SLU 38	0.01243	-0.00001	-0.04157	-0.0003	-0.0521	0.0001
76	SLU 39	0.01702	-0.00003	-0.04948	-0.0002	-0.0656	0.0001
76	SLU 40	0.01702	-0.00002	-0.04948	-0.0003	-0.0656	0.0001
76	SLU 41	-0.00105	-0.00001	-0.02173	-0.0003	-0.0152	0.0001
76	SLU 42	0.01251	-0.00001	-0.04255	-0.0003	-0.053	0.0001
76	SLU 43	-0.00097	-0.00004	-0.0227	-0.0002	-0.0161	0.0001
76	SLU 44	0.01258	-0.00003	-0.04352	-0.0002	-0.0539	0.0001
76	SLU 45	-0.00097	-0.00003	-0.0227	-0.0003	-0.0161	0.0001
76	SLU 46	0.01258	-0.00002	-0.04352	-0.0003	-0.0539	0.0001
76	SLU 47	0.01686	-0.00014	-0.0498	-0.0001	-0.0656	0
76	SLU 48	0.01686	-0.00013	-0.0498	-0.0001	-0.0656	0
76	SLU 49	-0.00121	-0.00012	-0.02205	-0.0002	-0.0152	0
76	SLU 50	0.01234	-0.00012	-0.04286	-0.0002	-0.053	0
76	SLU 51	0.01694	-0.00014	-0.05077	-0.0001	-0.0665	0
76	SLU 52	0.01694	-0.00014	-0.05077	-0.0001	-0.0665	0
76	SLU 53	-0.00113	-0.00012	-0.02302	-0.0002	-0.0161	0
76	SLU 54	0.01242	-0.00012	-0.04383	-0.0002	-0.0539	0
76	SLU 55	-0.00106	-0.00015	-0.02399	-0.0001	-0.017	0
76	SLU 56	0.0125	-0.00015	-0.04481	-0.0001	-0.0548	0
76	SLU 57	-0.00106	-0.00014	-0.02399	-0.0001	-0.017	0
76	SLU 58	0.0125	-0.00014	-0.04481	-0.0001	-0.0548	0
76	SLU 59	-0.00134	-0.00032	-0.02398	0.0001	-0.0166	0
76	SLU 60	0.01221	-0.00031	-0.04479	0.0001	-0.0544	0
76	SLU 61	-0.00134	-0.00031	-0.02398	0	-0.0166	0
76	SLU 62	0.01221	-0.0003	-0.04479	0	-0.0544	0
76	SLU 63	-0.00126	-0.00032	-0.02495	0	-0.0175	0
76	SLU 64	0.01229	-0.00031	-0.04576	0	-0.0553	0
76	SLU 65	-0.00126	-0.00031	-0.02495	0	-0.0175	0
76	SLU 66	0.01229	-0.00031	-0.04576	0	-0.0553	0
76	SLU 67	-0.00146	-0.00004	-0.02699	-0.0003	-0.0186	0.0001
76	SLU 68	0.01661	-0.00004	-0.05474	-0.0003	-0.069	0.0001
76	SLU 69	0.01661	-0.00003	-0.05474	-0.0003	-0.069	0.0001
76	SLU 70	-0.00146	-0.00002	-0.02699	-0.0003	-0.0186	0.0001
76	SLU 71	0.01209	-0.00002	-0.0478	-0.0003	-0.0564	0.0001
76	SLU 72	0.01669	-0.00004	-0.05571	-0.0003	-0.0699	0.0001
76	SLU 73	0.01669	-0.00003	-0.05571	-0.0003	-0.0699	0.0001
76	SLU 74	-0.00139	-0.00002	-0.02796	-0.0003	-0.0195	0.0001
76	SLU 75	0.01217	-0.00002	-0.04877	-0.0003	-0.0573	0.0001
76	SLU 76	-0.00131	-0.00005	-0.02893	-0.0003	-0.0204	0.0001
76	SLU 77	0.01225	-0.00004	-0.04975	-0.0003	-0.0582	0.0001
76	SLU 78	-0.00131	-0.00004	-0.02893	-0.0003	-0.0204	0.0001
76	SLU 79	0.01225	-0.00003	-0.04975	-0.0003	-0.0582	0.0001
76	SLU 80	0.01652	-0.00015	-0.05603	-0.0002	-0.0699	0
76	SLU 81	0.01652	-0.00014	-0.05603	-0.0002	-0.0699	0
76	SLU 82	-0.00155	-0.00013	-0.02827	-0.0002	-0.0195	0
76	SLU 83	0.012	-0.00013	-0.04909	-0.0002	-0.0573	0.0001
76	SLU 84	0.0166	-0.00015	-0.057	-0.0002	-0.0708	0
76	SLU 85	0.0166	-0.00015	-0.057	-0.0002	-0.0708	0
76	SLU 86	-0.00147	-0.00013	-0.02925	-0.0002	-0.0204	0.0001

Nodo	Cont.	Spostamento			Rotazione		
Ind.	N.br.	ux	uy	uz	rx	ry	rz
76	SLU 87	0.01208	-0.00013	-0.05006	-0.0002	-0.0582	0.0001
76	SLU 88	-0.00139	-0.00016	-0.03022	-0.0002	-0.0213	0
76	SLU 89	0.01216	-0.00016	-0.05103	-0.0002	-0.0591	0
76	SLU 90	-0.00139	-0.00015	-0.03022	-0.0002	-0.0213	0
76	SLU 91	0.01216	-0.00015	-0.05103	-0.0002	-0.0591	0
76	SLU 92	-0.00168	-0.00033	-0.03021	0	-0.0209	0
76	SLU 93	0.01187	-0.00032	-0.05102	0	-0.0587	0
76	SLU 94	-0.00168	-0.00032	-0.03021	0	-0.0209	0
76	SLU 95	0.01187	-0.00031	-0.05102	0	-0.0587	0
76	SLU 96	-0.0016	-0.00033	-0.03118	0	-0.0218	0
76	SLU 97	0.01195	-0.00032	-0.05199	0	-0.0596	0
76	SLU 98	-0.0016	-0.00032	-0.03118	0	-0.0218	0
76	SLU 99	0.01195	-0.00032	-0.05199	0	-0.0596	0
76	SLU 100	-0.00146	-0.00004	-0.02699	-0.0003	-0.0186	0.0001
76	SLU 101	0.01661	-0.00004	-0.05474	-0.0003	-0.069	0.0001
76	SLU 102	0.01661	-0.00003	-0.05474	-0.0003	-0.069	0.0001
76	SLU 103	-0.00146	-0.00002	-0.02699	-0.0003	-0.0186	0.0001
76	SLU 104	0.01209	-0.00002	-0.0478	-0.0003	-0.0564	0.0001
76	SLU 105	0.01669	-0.00004	-0.05571	-0.0003	-0.0699	0.0001
76	SLU 106	0.01669	-0.00003	-0.05571	-0.0003	-0.0699	0.0001
76	SLU 107	-0.00139	-0.00002	-0.02796	-0.0003	-0.0195	0.0001
76	SLU 108	0.01217	-0.00002	-0.04877	-0.0003	-0.0573	0.0001
76	SLU 109	-0.00131	-0.00005	-0.02893	-0.0003	-0.0204	0.0001
76	SLU 110	0.01225	-0.00004	-0.04975	-0.0003	-0.0582	0.0001
76	SLU 111	-0.00131	-0.00004	-0.02893	-0.0003	-0.0204	0.0001
76	SLU 112	0.01225	-0.00003	-0.04975	-0.0003	-0.0582	0.0001
76	SLU 113	0.01652	-0.00015	-0.05603	-0.0002	-0.0699	0
76	SLU 114	0.01652	-0.00014	-0.05603	-0.0002	-0.0699	0
76	SLU 115	-0.00155	-0.00013	-0.02827	-0.0002	-0.0195	0
76	SLU 116	0.012	-0.00013	-0.04909	-0.0002	-0.0573	0.0001
76	SLU 117	0.0166	-0.00015	-0.057	-0.0002	-0.0708	0
76	SLU 118	0.0166	-0.00015	-0.057	-0.0002	-0.0708	0
76	SLU 119	-0.00147	-0.00013	-0.02925	-0.0002	-0.0204	0.0001
76	SLU 120	0.01208	-0.00013	-0.05006	-0.0002	-0.0582	0.0001
76	SLU 121	-0.00139	-0.00016	-0.03022	-0.0002	-0.0213	0
76	SLU 122	0.01216	-0.00016	-0.05103	-0.0002	-0.0591	0
76	SLU 123	-0.00139	-0.00015	-0.03022	-0.0002	-0.0213	0
76	SLU 124	0.01216	-0.00015	-0.05103	-0.0002	-0.0591	0
76	SLU 125	-0.00168	-0.00033	-0.03021	0	-0.0209	0
76	SLU 126	0.01187	-0.00032	-0.05102	0	-0.0587	0
76	SLU 127	-0.00168	-0.00032	-0.03021	0	-0.0209	0
76	SLU 128	0.01187	-0.00031	-0.05102	0	-0.0587	0
76	SLU 129	-0.0016	-0.00033	-0.03118	0	-0.0218	0
76	SLU 130	0.01195	-0.00032	-0.05199	0	-0.0596	0
76	SLU 131	-0.0016	-0.00032	-0.03118	0	-0.0218	0
76	SLU 132	0.01195	-0.00032	-0.05199	0	-0.0596	0
76	SLE RA 1	-0.00113	-0.00003	-0.02076	-0.0002	-0.0143	0.0001
76	SLE RA 2	0.01092	-0.00003	-0.03926	-0.0002	-0.0479	0.0001
76	SLE RA 3	0.01092	-0.00003	-0.03926	-0.0002	-0.0479	0.0001
76	SLE RA 4	-0.00113	-0.00002	-0.02076	-0.0003	-0.0143	0.0001
76	SLE RA 5	0.00791	-0.00002	-0.03464	-0.0003	-0.0395	0.0001
76	SLE RA 6	0.01097	-0.00003	-0.03991	-0.0002	-0.0485	0.0001
76	SLE RA 7	0.01097	-0.00003	-0.03991	-0.0002	-0.0485	0.0001
76	SLE RA 8	-0.00107	-0.00002	-0.02141	-0.0003	-0.0149	0.0001
76	SLE RA 9	0.00796	-0.00002	-0.03528	-0.0003	-0.0401	0.0001
76	SLE RA 10	-0.00102	-0.00003	-0.02206	-0.0002	-0.0155	0.0001
76	SLE RA 11	0.00801	-0.00003	-0.03593	-0.0002	-0.0407	0.0001
76	SLE RA 12	-0.00102	-0.00003	-0.02206	-0.0002	-0.0155	0.0001
76	SLE RA 13	0.00801	-0.00003	-0.03593	-0.0003	-0.0407	0.0001
76	SLE RA 14	0.01086	-0.00011	-0.04012	-0.0002	-0.0485	0
76	SLE RA 15	0.01086	-0.0001	-0.04012	-0.0002	-0.0485	0
76	SLE RA 16	-0.00118	-0.00009	-0.02162	-0.0002	-0.0149	0
76	SLE RA 17	0.00785	-0.00009	-0.03549	-0.0002	-0.0401	0
76	SLE RA 18	0.01092	-0.00011	-0.04077	-0.0002	-0.0491	0
76	SLE RA 19	0.01092	-0.0001	-0.04077	-0.0002	-0.0491	0
76	SLE RA 20	-0.00113	-0.00009	-0.02227	-0.0002	-0.0155	0
76	SLE RA 21	0.0079	-0.00009	-0.03614	-0.0002	-0.0407	0
76	SLE RA 22	-0.00108	-0.00011	-0.02291	-0.0002	-0.0161	0
76	SLE RA 23	0.00796	-0.00011	-0.03679	-0.0002	-0.0413	0
76	SLE RA 24	-0.00108	-0.0001	-0.02291	-0.0002	-0.0161	0
76	SLE RA 25	0.00796	-0.0001	-0.03679	-0.0002	-0.0413	0
76	SLE RA 26	-0.00127	-0.00022	-0.0229	0	-0.0158	0
76	SLE RA 27	0.00777	-0.00022	-0.03678	0	-0.041	0
76	SLE RA 28	-0.00127	-0.00022	-0.0229	-0.0001	-0.0158	0
76	SLE RA 29	0.00777	-0.00021	-0.03678	-0.0001	-0.041	0
76	SLE RA 30	-0.00122	-0.00022	-0.02355	0	-0.0164	0
76	SLE RA 31	0.00782	-0.00022	-0.03743	0	-0.0416	0
76	SLE RA 32	-0.00122	-0.00022	-0.02355	-0.0001	-0.0164	0
76	SLE RA 33	0.00782	-0.00021	-0.03743	-0.0001	-0.0416	0
76	SLE FR 1	-0.00113	-0.00003	-0.02076	-0.0002	-0.0143	0.0001
76	SLE FR 2	0.00791	-0.00003	-0.03464	-0.0002	-0.0395	0.0001
76	SLE FR 3	-0.00113	-0.00003	-0.02076	-0.0002	-0.0143	0.0001
76	SLE FR 4	-0.0011	-0.00003	-0.02102	-0.0002	-0.0145	0.0001
76	SLE FR 5	-0.00118	-0.00011	-0.02162	-0.0002	-0.0149	0
76	SLE QP 1	-0.00113	-0.00003	-0.02076	-0.0002	-0.0143	0.0001
76	SLO 1	-0.01236	-0.15992	-0.02671	0.0772	-0.0145	0.0956
76	SLO 2	-0.01236	-0.15992	-0.02671	0.0772	-0.0145	0.0956
76	SLO 3	-0.01236	0.15986	-0.02671	-0.0776	-0.0145	-0.0955
76	SLO 4	-0.01236	0.15986	-0.02671	-0.0776	-0.0145	-0.0955
76	SLO 5	-0.00449	-0.533	-0.02255	0.2578	-0.0144	0.3184
76	SLO 6	-0.00449	-0.533	-0.02255	0.2578	-0.0144	0.3184
76	SLO 7	-0.00449	0.53293	-0.02255	-0.2582	-0.0144	-0.3183
76	SLO 8	-0.00449	0.53293	-0.02255	-0.2582	-0.0144	-0.3183
76	SLO 9	0.00224	-0.533	-0.01897	0.2578	-0.0142	0.3184
76	SLO 10	0.00224	-0.533	-0.01897	0.2578	-0.0142	0.3184

Nodo	Cont.	Spostamento			Rotazione		
Ind.	N.br.	ux	uy	uz	rx	ry	rz
76	SLO 11	0.00224	0.53293	-0.01897	-0.2582	-0.0142	-0.3183
76	SLO 12	0.00224	0.53293	-0.01897	-0.2582	-0.0142	-0.3183
76	SLO 13	0.01011	-0.15992	-0.01481	0.0772	-0.0141	0.0956
76	SLO 14	0.01011	-0.15992	-0.01481	0.0772	-0.0141	0.0956
76	SLO 15	0.01011	0.15986	-0.01481	-0.0776	-0.0141	-0.0955
76	SLO 16	0.01011	0.15986	-0.01481	-0.0776	-0.0141	-0.0955
76	SLD 1	-0.01036	-0.14777	-0.02565	0.0713	-0.0145	0.0883
76	SLD 2	-0.01036	-0.14777	-0.02565	0.0713	-0.0145	0.0883
76	SLD 3	-0.01036	0.1477	-0.02565	-0.0717	-0.0145	-0.0882
76	SLD 4	-0.01036	0.1477	-0.02565	-0.0717	-0.0145	-0.0882
76	SLD 5	-0.0039	-0.49248	-0.02223	0.2382	-0.0143	0.2942
76	SLD 6	-0.0039	-0.49248	-0.02223	0.2382	-0.0143	0.2942
76	SLD 7	-0.0039	0.49242	-0.02223	-0.2386	-0.0143	-0.2941
76	SLD 8	-0.0039	0.49242	-0.02223	-0.2386	-0.0143	-0.2941
76	SLD 9	0.00165	-0.49248	-0.01929	0.2382	-0.0142	0.2942
76	SLD 10	0.00165	-0.49248	-0.01929	0.2382	-0.0142	0.2942
76	SLD 11	0.00165	0.49242	-0.01929	-0.2386	-0.0142	-0.2941
76	SLD 12	0.00165	0.49242	-0.01929	-0.2386	-0.0142	-0.2941
76	SLD 13	0.00811	-0.14777	-0.01586	0.0713	-0.0141	0.0883
76	SLD 14	0.00811	-0.14777	-0.01586	0.0713	-0.0141	0.0883
76	SLD 15	0.00811	0.1477	-0.01586	-0.0717	-0.0141	-0.0882
76	SLD 16	0.00811	0.1477	-0.01586	-0.0717	-0.0141	-0.0882
76	SLV 1	-0.02102	-0.38969	-0.03131	0.1884	-0.0147	0.2328
76	SLV 2	-0.02102	-0.38969	-0.03131	0.1884	-0.0147	0.2328
76	SLV 3	-0.02102	0.38962	-0.03131	-0.1889	-0.0147	-0.2327
76	SLV 4	-0.02102	0.38962	-0.03131	-0.1889	-0.0147	-0.2327
76	SLV 5	-0.00709	-1.29888	-0.02392	0.6285	-0.0144	0.7759
76	SLV 6	-0.00709	-1.29888	-0.02392	0.6285	-0.0144	0.7759
76	SLV 7	-0.00709	1.29881	-0.02392	-0.629	-0.0144	-0.7758
76	SLV 8	-0.00709	1.29881	-0.02392	-0.629	-0.0144	-0.7758
76	SLV 9	0.00484	-1.29888	-0.0176	0.6285	-0.0142	0.7759
76	SLV 10	0.00484	-1.29888	-0.0176	0.6285	-0.0142	0.7759
76	SLV 11	0.00484	1.29881	-0.0176	-0.629	-0.0142	-0.7758
76	SLV 12	0.00484	1.29881	-0.0176	-0.629	-0.0142	-0.7758
76	SLV 13	0.01877	-0.38969	-0.01021	0.1884	-0.0139	0.2328
76	SLV 14	0.01877	-0.38969	-0.01021	0.1884	-0.0139	0.2328
76	SLV 15	0.01877	0.38962	-0.01021	-0.1888	-0.0139	-0.2327
76	SLV 16	0.01877	0.38962	-0.01021	-0.1888	-0.0139	-0.2327
77	SLU 1	0.00113	-0.00002	-0.02087	-0.0001	0.0144	0
77	SLU 2	-0.03501	-0.00001	-0.07638	-0.0001	0.1152	0
77	SLU 3	-0.03501	-0.00001	-0.07638	-0.0001	0.1152	0
77	SLU 4	0.00113	0.00001	-0.02087	-0.0001	0.0144	0
77	SLU 5	-0.02597	0.00001	-0.0625	-0.0001	0.09	0
77	SLU 6	-0.03525	-0.00002	-0.07733	-0.0001	0.1161	0
77	SLU 7	-0.03525	-0.00001	-0.07733	-0.0001	0.1161	0
77	SLU 8	0.00089	0.00001	-0.02182	-0.0001	0.0153	0
77	SLU 9	-0.02621	0.00001	-0.06345	-0.0001	0.0909	0
77	SLU 10	0.00066	-0.00002	-0.02277	-0.0001	0.0163	0
77	SLU 11	-0.02645	-0.00002	-0.0644	-0.0001	0.0919	0
77	SLU 12	0.00066	-0.00001	-0.02277	-0.0001	0.0163	0
77	SLU 13	-0.02645	-0.00001	-0.0644	-0.0001	0.0919	0
77	SLU 14	-0.03497	-0.00012	-0.0773	0.0001	0.1156	0
77	SLU 15	-0.03497	-0.00012	-0.0773	0.0001	0.1156	0
77	SLU 16	0.00117	-0.0001	-0.02179	0	0.0147	0
77	SLU 17	-0.02594	-0.0001	-0.06342	0	0.0903	0
77	SLU 18	-0.03521	-0.00013	-0.07825	0.0001	0.1165	0
77	SLU 19	-0.03521	-0.00012	-0.07825	0.0001	0.1165	0
77	SLU 20	0.00093	-0.0001	-0.02274	0	0.0157	0
77	SLU 21	-0.02617	-0.0001	-0.06437	0	0.0913	0
77	SLU 22	0.00069	-0.00013	-0.02369	0.0001	0.0166	0
77	SLU 23	-0.02641	-0.00013	-0.06532	0.0001	0.0922	0
77	SLU 24	0.00069	-0.00012	-0.02369	0.0001	0.0166	0
77	SLU 25	-0.02641	-0.00012	-0.06532	0.0001	0.0922	0
77	SLU 26	0.00122	-0.00029	-0.02317	0.0003	0.0153	0.0001
77	SLU 27	-0.02588	-0.00029	-0.0648	0.0003	0.0909	0.0001
77	SLU 28	0.00122	-0.00028	-0.02317	0.0003	0.0153	0.0001
77	SLU 29	-0.02588	-0.00028	-0.0648	0.0003	0.0909	0.0001
77	SLU 30	0.00099	-0.00029	-0.02412	0.0003	0.0162	0.0001
77	SLU 31	-0.02612	-0.00029	-0.06575	0.0003	0.0918	0.0001
77	SLU 32	0.00099	-0.00028	-0.02412	0.0003	0.0162	0.0001
77	SLU 33	-0.02612	-0.00028	-0.06575	0.0003	0.0918	0.0001
77	SLU 34	0.00113	-0.00002	-0.02087	-0.0001	0.0144	0
77	SLU 35	-0.03501	-0.00001	-0.07638	-0.0001	0.1152	0
77	SLU 36	-0.03501	-0.00001	-0.07638	-0.0001	0.1152	0
77	SLU 37	0.00113	0.00001	-0.02087	-0.0001	0.0144	0
77	SLU 38	-0.02597	0.00001	-0.0625	-0.0001	0.09	0
77	SLU 39	-0.03525	-0.00002	-0.07733	-0.0001	0.1161	0
77	SLU 40	-0.03525	-0.00001	-0.07733	-0.0001	0.1161	0
77	SLU 41	0.00089	0.00001	-0.02182	-0.0001	0.0153	0
77	SLU 42	-0.02621	0.00001	-0.06345	-0.0001	0.0909	0
77	SLU 43	0.00066	-0.00002	-0.02277	-0.0001	0.0163	0
77	SLU 44	-0.02645	-0.00002	-0.0644	-0.0001	0.0919	0
77	SLU 45	0.00066	-0.00001	-0.02277	-0.0001	0.0163	0
77	SLU 46	-0.02645	-0.00001	-0.0644	-0.0001	0.0919	0
77	SLU 47	-0.03497	-0.00012	-0.0773	0.0001	0.1156	0
77	SLU 48	-0.03497	-0.00012	-0.0773	0.0001	0.1156	0
77	SLU 49	0.00117	-0.0001	-0.02179	0	0.0147	0
77	SLU 50	-0.02594	-0.0001	-0.06342	0	0.0903	0
77	SLU 51	-0.03521	-0.00013	-0.07825	0.0001	0.1165	0
77	SLU 52	-0.03521	-0.00012	-0.07825	0.0001	0.1165	0
77	SLU 53	0.00093	-0.0001	-0.02274	0	0.0157	0
77	SLU 54	-0.02617	-0.0001	-0.06437	0	0.0913	0
77	SLU 55	0.00069	-0.00013	-0.02369	0.0001	0.0166	0
77	SLU 56	-0.02641	-0.00013	-0.06532	0.0001	0.0922	0
77	SLU 57	0.00069	-0.00012	-0.02369	0.0001	0.0166	0

Nodo	Cont.	Spostamento			Rotazione		
Ind.	N.br.	ux	uy	uz	rx	ry	rz
77	SLU 58	-0.02641	-0.00012	-0.06532	0.0001	0.0922	0
77	SLU 59	0.00122	-0.00029	-0.02317	0.0003	0.0153	0.0001
77	SLU 60	-0.02588	-0.00029	-0.0648	0.0003	0.0909	0.0001
77	SLU 61	0.00122	-0.00028	-0.02317	0.0003	0.0153	0.0001
77	SLU 62	-0.02588	-0.00028	-0.0648	0.0003	0.0909	0.0001
77	SLU 63	0.00099	-0.00029	-0.02412	0.0003	0.0162	0.0001
77	SLU 64	-0.02612	-0.00029	-0.06575	0.0003	0.0918	0.0001
77	SLU 65	0.00099	-0.00028	-0.02412	0.0003	0.0162	0.0001
77	SLU 66	-0.02612	-0.00028	-0.06575	0.0003	0.0918	0.0001
77	SLU 67	0.00147	-0.00002	-0.02713	-0.0001	0.0187	0
77	SLU 68	-0.03467	-0.00002	-0.08264	-0.0001	0.1195	0
77	SLU 69	-0.03467	-0.00001	-0.08264	-0.0001	0.1195	0
77	SLU 70	0.00147	0	-0.02713	-0.0001	0.0187	0
77	SLU 71	-0.02563	0	-0.06876	-0.0001	0.0943	0
77	SLU 72	-0.03491	-0.00002	-0.08359	-0.0001	0.1204	0
77	SLU 73	-0.03491	-0.00001	-0.08359	-0.0001	0.1204	0
77	SLU 74	0.00123	0	-0.02808	-0.0001	0.0196	0
77	SLU 75	-0.02587	0	-0.06971	-0.0001	0.0952	0
77	SLU 76	0.001	-0.00002	-0.02903	-0.0001	0.0206	0
77	SLU 77	-0.02611	-0.00002	-0.07066	-0.0001	0.0962	0
77	SLU 78	0.001	-0.00001	-0.02903	-0.0001	0.0206	0
77	SLU 79	-0.02611	-0.00001	-0.07066	-0.0001	0.0962	0
77	SLU 80	-0.03463	-0.00013	-0.08356	0.0001	0.1199	0
77	SLU 81	-0.03463	-0.00012	-0.08356	0	0.1199	0
77	SLU 82	0.00151	-0.00011	-0.02805	0	0.019	0
77	SLU 83	-0.0256	-0.00011	-0.06968	0	0.0947	0
77	SLU 84	-0.03487	-0.00013	-0.08451	0.0001	0.1208	0
77	SLU 85	-0.03487	-0.00012	-0.08451	0	0.1208	0
77	SLU 86	0.00127	-0.00011	-0.029	0	0.02	0
77	SLU 87	-0.02583	-0.00011	-0.07063	0	0.0956	0
77	SLU 88	0.00103	-0.00013	-0.02995	0.0001	0.0209	0
77	SLU 89	-0.02607	-0.00013	-0.07158	0.0001	0.0965	0
77	SLU 90	0.00103	-0.00012	-0.02995	0	0.0209	0
77	SLU 91	-0.02607	-0.00012	-0.07158	0	0.0965	0
77	SLU 92	0.00156	-0.0003	-0.02943	0.0003	0.0196	0.0001
77	SLU 93	-0.02554	-0.0003	-0.07106	0.0003	0.0952	0.0001
77	SLU 94	0.00156	-0.00029	-0.02943	0.0003	0.0196	0.0001
77	SLU 95	-0.02554	-0.00029	-0.07106	0.0003	0.0952	0.0001
77	SLU 96	0.00133	-0.0003	-0.03038	0.0003	0.0205	0.0001
77	SLU 97	-0.02578	-0.0003	-0.07201	0.0003	0.0961	0.0001
77	SLU 98	0.00133	-0.00029	-0.03038	0.0003	0.0205	0.0001
77	SLU 99	-0.02578	-0.00029	-0.07201	0.0003	0.0961	0.0001
77	SLU 100	0.00147	-0.00002	-0.02713	-0.0001	0.0187	0
77	SLU 101	-0.03467	-0.00002	-0.08264	-0.0001	0.1195	0
77	SLU 102	-0.03467	-0.00001	-0.08264	-0.0001	0.1195	0
77	SLU 103	0.00147	0	-0.02713	-0.0001	0.0187	0
77	SLU 104	-0.02563	0	-0.06876	-0.0001	0.0943	0
77	SLU 105	-0.03491	-0.00002	-0.08359	-0.0001	0.1204	0
77	SLU 106	-0.03491	-0.00001	-0.08359	-0.0001	0.1204	0
77	SLU 107	0.00123	0	-0.02808	-0.0001	0.0196	0
77	SLU 108	-0.02587	0	-0.06971	-0.0001	0.0952	0
77	SLU 109	0.001	-0.00002	-0.02903	-0.0001	0.0206	0
77	SLU 110	-0.02611	-0.00002	-0.07066	-0.0001	0.0962	0
77	SLU 111	0.001	-0.00001	-0.02903	-0.0001	0.0206	0
77	SLU 112	-0.02611	-0.00001	-0.07066	-0.0001	0.0962	0
77	SLU 113	-0.03463	-0.00013	-0.08356	0.0001	0.1199	0
77	SLU 114	-0.03463	-0.00012	-0.08356	0	0.1199	0
77	SLU 115	0.00151	-0.00011	-0.02805	0	0.019	0
77	SLU 116	-0.0256	-0.00011	-0.06968	0	0.0947	0
77	SLU 117	-0.03487	-0.00013	-0.08451	0.0001	0.1208	0
77	SLU 118	-0.03487	-0.00012	-0.08451	0	0.1208	0
77	SLU 119	0.00127	-0.00011	-0.029	0	0.02	0
77	SLU 120	-0.02583	-0.00011	-0.07063	0	0.0956	0
77	SLU 121	0.00103	-0.00013	-0.02995	0.0001	0.0209	0
77	SLU 122	-0.02607	-0.00013	-0.07158	0.0001	0.0965	0
77	SLU 123	0.00103	-0.00012	-0.02995	0	0.0209	0
77	SLU 124	-0.02607	-0.00012	-0.07158	0	0.0965	0
77	SLU 125	0.00156	-0.0003	-0.02943	0.0003	0.0196	0.0001
77	SLU 126	-0.02554	-0.0003	-0.07106	0.0003	0.0952	0.0001
77	SLU 127	0.00156	-0.00029	-0.02943	0.0003	0.0196	0.0001
77	SLU 128	-0.02554	-0.00029	-0.07106	0.0003	0.0952	0.0001
77	SLU 129	0.00133	-0.0003	-0.03038	0.0003	0.0205	0.0001
77	SLU 130	-0.02578	-0.0003	-0.07201	0.0003	0.0961	0.0001
77	SLU 131	0.00133	-0.00029	-0.03038	0.0003	0.0205	0.0001
77	SLU 132	-0.02578	-0.00029	-0.07201	0.0003	0.0961	0.0001
77	SLE RA 1	0.00113	-0.00002	-0.02087	-0.0001	0.0144	0
77	SLE RA 2	-0.02296	-0.00002	-0.05788	-0.0001	0.0816	0
77	SLE RA 3	-0.02296	-0.00001	-0.05788	-0.0001	0.0816	0
77	SLE RA 4	0.00113	0	-0.02087	-0.0001	0.0144	0
77	SLE RA 5	-0.01694	0	-0.04862	-0.0001	0.0648	0
77	SLE RA 6	-0.02312	-0.00002	-0.05851	-0.0001	0.0822	0
77	SLE RA 7	-0.02312	-0.00001	-0.05851	-0.0001	0.0822	0
77	SLE RA 8	0.00097	0	-0.0215	-0.0001	0.015	0
77	SLE RA 9	-0.0171	0	-0.04926	-0.0001	0.0654	0
77	SLE RA 10	0.00081	-0.00002	-0.02214	-0.0001	0.0156	0
77	SLE RA 11	-0.01726	-0.00002	-0.04989	-0.0001	0.066	0
77	SLE RA 12	0.00081	-0.00001	-0.02214	-0.0001	0.0156	0
77	SLE RA 13	-0.01726	-0.00001	-0.04989	-0.0001	0.066	0
77	SLE RA 14	-0.02294	-0.00009	-0.05849	0	0.0818	0
77	SLE RA 15	-0.02294	-0.00008	-0.05849	0	0.0818	0
77	SLE RA 16	0.00116	-0.00007	-0.02148	0	0.0146	0
77	SLE RA 17	-0.01691	-0.00007	-0.04924	0	0.065	0
77	SLE RA 18	-0.02309	-0.00009	-0.05912	0	0.0825	0
77	SLE RA 19	-0.02309	-0.00008	-0.05912	0	0.0825	0
77	SLE RA 20	0.001	-0.00008	-0.02212	0	0.0152	0

Nodo	Cont.	Spostamento			Rotazione		
Ind.	N.br.	ux	uy	uz	rx	ry	rz
77	SLE RA 21	-0.01707	-0.00007	-0.04987	0	0.0657	0
77	SLE RA 22	0.00084	-0.00009	-0.02275	0	0.0159	0
77	SLE RA 23	-0.01723	-0.00009	-0.05051	0	0.0663	0
77	SLE RA 24	0.00084	-0.00008	-0.02275	0	0.0159	0
77	SLE RA 25	-0.01723	-0.00008	-0.05051	0	0.0663	0
77	SLE RA 26	0.00119	-0.0002	-0.0224	0.0002	0.015	0.0001
77	SLE RA 27	-0.01688	-0.0002	-0.05016	0.0002	0.0654	0.0001
77	SLE RA 28	0.00119	-0.00019	-0.0224	0.0002	0.015	0.0001
77	SLE RA 29	-0.01688	-0.00019	-0.05016	0.0002	0.0654	0.0001
77	SLE RA 30	0.00104	-0.0002	-0.02304	0.0002	0.0156	0.0001
77	SLE RA 31	-0.01703	-0.0002	-0.05079	0.0002	0.066	0.0001
77	SLE RA 32	0.00104	-0.00019	-0.02304	0.0002	0.0156	0.0001
77	SLE RA 33	-0.01703	-0.00019	-0.05079	0.0002	0.066	0.0001
77	SLE FR 1	0.00113	-0.00002	-0.02087	-0.0001	0.0144	0
77	SLE FR 2	-0.01694	-0.00002	-0.04862	-0.0001	0.0648	0
77	SLE FR 3	0.00113	-0.00001	-0.02087	-0.0001	0.0144	0
77	SLE FR 4	0.00107	-0.00002	-0.02112	-0.0001	0.0146	0
77	SLE FR 5	0.00116	-0.00009	-0.02148	0	0.0146	0
77	SLE QP 1	0.00113	-0.00002	-0.02087	-0.0001	0.0144	0
77	SLO 1	-0.01015	-0.1599	-0.01489	0.0773	0.0142	-0.0956
77	SLO 2	-0.01015	-0.1599	-0.01489	0.0773	0.0142	-0.0956
77	SLO 3	-0.01015	0.15987	-0.01489	-0.0774	0.0142	0.0955
77	SLO 4	-0.01015	0.15987	-0.01489	-0.0774	0.0142	0.0955
77	SLO 5	-0.00225	-0.53297	-0.01908	0.2577	0.0143	-0.3185
77	SLO 6	-0.00225	-0.53297	-0.01908	0.2577	0.0143	-0.3185
77	SLO 7	-0.00225	0.53294	-0.01908	-0.2579	0.0143	0.3185
77	SLO 8	-0.00225	0.53294	-0.01908	-0.2579	0.0143	0.3185
77	SLO 9	0.00451	-0.53297	-0.02267	0.2577	0.0144	-0.3185
77	SLO 10	0.00451	-0.53297	-0.02267	0.2577	0.0144	-0.3185
77	SLO 11	0.00451	0.53294	-0.02267	-0.2579	0.0144	0.3185
77	SLO 12	0.00451	0.53294	-0.02267	-0.2579	0.0144	0.3185
77	SLO 13	0.01241	-0.1599	-0.02685	0.0773	0.0146	-0.0956
77	SLO 14	0.01241	-0.1599	-0.02685	0.0773	0.0146	-0.0956
77	SLO 15	0.01241	0.15987	-0.02685	-0.0774	0.0146	0.0955
77	SLO 16	0.01241	0.15987	-0.02685	-0.0774	0.0146	0.0955
77	SLD 1	-0.00815	-0.14775	-0.01595	0.0714	0.0142	-0.0883
77	SLD 2	-0.00815	-0.14775	-0.01595	0.0714	0.0142	-0.0883
77	SLD 3	-0.00815	0.14772	-0.01595	-0.0715	0.0142	0.0883
77	SLD 4	-0.00815	0.14772	-0.01595	-0.0715	0.0142	0.0883
77	SLD 5	-0.00165	-0.49246	-0.0194	0.2381	0.0143	-0.2943
77	SLD 6	-0.00165	-0.49246	-0.0194	0.2381	0.0143	-0.2943
77	SLD 7	-0.00165	0.49243	-0.0194	-0.2383	0.0143	0.2943
77	SLD 8	-0.00165	0.49243	-0.0194	-0.2383	0.0143	0.2943
77	SLD 9	0.00391	-0.49246	-0.02235	0.2381	0.0144	-0.2943
77	SLD 10	0.00391	-0.49246	-0.02235	0.2381	0.0144	-0.2943
77	SLD 11	0.00391	0.49243	-0.02235	-0.2383	0.0144	0.2943
77	SLD 12	0.00391	0.49243	-0.02235	-0.2383	0.0144	0.2943
77	SLD 13	0.01041	-0.14775	-0.02579	0.0714	0.0145	-0.0883
77	SLD 14	0.01041	-0.14775	-0.02579	0.0714	0.0145	-0.0883
77	SLD 15	0.01041	0.14772	-0.02579	-0.0715	0.0145	0.0883
77	SLD 16	0.01041	0.14772	-0.02579	-0.0715	0.0145	0.0883
77	SLV 1	-0.01886	-0.38966	-0.01028	0.1884	0.014	-0.2329
77	SLV 2	-0.01886	-0.38966	-0.01028	0.1884	0.014	-0.2329
77	SLV 3	-0.01886	0.38963	-0.01028	-0.1885	0.014	0.2328
77	SLV 4	-0.01886	0.38963	-0.01028	-0.1885	0.014	0.2328
77	SLV 5	-0.00487	-1.29884	-0.01769	0.6282	0.0143	-0.7762
77	SLV 6	-0.00487	-1.29884	-0.01769	0.6282	0.0143	-0.7762
77	SLV 7	-0.00487	1.29881	-0.01769	-0.6283	0.0143	0.7761
77	SLV 8	-0.00487	1.29881	-0.01769	-0.6283	0.0143	0.7761
77	SLV 9	0.00713	-1.29884	-0.02405	0.6282	0.0145	-0.7762
77	SLV 10	0.00713	-1.29884	-0.02405	0.6282	0.0145	-0.7762
77	SLV 11	0.00713	1.29881	-0.02405	-0.6283	0.0145	0.7761
77	SLV 12	0.00713	1.29881	-0.02405	-0.6283	0.0145	0.7761
77	SLV 13	0.02112	-0.38966	-0.03147	0.1884	0.0148	-0.2329
77	SLV 14	0.02112	-0.38966	-0.03147	0.1884	0.0148	-0.2329
77	SLV 15	0.02112	0.38963	-0.03147	-0.1885	0.0148	0.2328
77	SLV 16	0.02112	0.38963	-0.03147	-0.1885	0.0148	0.2328
78	SLU 1	-0.00113	-0.00002	-0.02087	-0.0001	-0.0144	0
78	SLU 2	0.03501	-0.00001	-0.07638	-0.0001	-0.1152	0
78	SLU 3	0.03501	-0.00001	-0.07638	-0.0001	-0.1152	0
78	SLU 4	-0.00113	0.00001	-0.02087	-0.0001	-0.0144	0
78	SLU 5	0.02597	0.00001	-0.0625	-0.0001	-0.09	0
78	SLU 6	0.03505	-0.00002	-0.07757	-0.0001	-0.1164	0
78	SLU 7	0.03505	-0.00001	-0.07757	-0.0001	-0.1164	0
78	SLU 8	-0.00108	0.00001	-0.02206	-0.0001	-0.0156	0
78	SLU 9	0.02602	0.00001	-0.06369	-0.0001	-0.0912	0
78	SLU 10	-0.00104	-0.00002	-0.02325	-0.0001	-0.0169	0
78	SLU 11	0.02606	-0.00002	-0.06488	-0.0001	-0.0925	0
78	SLU 12	-0.00104	-0.00001	-0.02325	-0.0001	-0.0169	0
78	SLU 13	0.02606	-0.00001	-0.06488	-0.0001	-0.0925	0
78	SLU 14	0.03465	-0.00012	-0.0777	0.0001	-0.116	0
78	SLU 15	0.03465	-0.00012	-0.0777	0.0001	-0.116	0
78	SLU 16	-0.00149	-0.0001	-0.02219	0	-0.0152	0
78	SLU 17	0.02562	-0.0001	-0.06382	0	-0.0908	0
78	SLU 18	0.0347	-0.00013	-0.07889	0.0001	-0.1173	0
78	SLU 19	0.0347	-0.00012	-0.07889	0.0001	-0.1173	0
78	SLU 20	-0.00144	-0.0001	-0.02338	0	-0.0165	0
78	SLU 21	0.02566	-0.0001	-0.06501	0	-0.0921	0
78	SLU 22	-0.0014	-0.00013	-0.02458	0.0001	-0.0177	0
78	SLU 23	0.02571	-0.00013	-0.06621	0.0001	-0.0933	0
78	SLU 24	-0.0014	-0.00012	-0.02458	0.0001	-0.0177	0
78	SLU 25	0.02571	-0.00012	-0.06621	0.0001	-0.0933	0
78	SLU 26	-0.00202	-0.00029	-0.02417	0.0003	-0.0165	-0.0001
78	SLU 27	0.02508	-0.00029	-0.0658	0.0003	-0.0921	-0.0001
78	SLU 28	-0.00202	-0.00028	-0.02417	0.0003	-0.0165	-0.0001

Nodo	Cont.	Spostamento			Rotazione		
Ind.	N.br.	ux	uy	uz	rx	ry	rz
78	SLU 29	0.02508	-0.00028	-0.0658	0.0003	-0.0921	-0.0001
78	SLU 30	-0.00198	-0.00029	-0.02537	0.0003	-0.0178	-0.0001
78	SLU 31	0.02513	-0.00029	-0.067	0.0003	-0.0934	-0.0001
78	SLU 32	-0.00198	-0.00028	-0.02537	0.0003	-0.0178	-0.0001
78	SLU 33	0.02513	-0.00028	-0.067	0.0003	-0.0934	-0.0001
78	SLU 34	-0.00113	-0.00002	-0.02087	-0.0001	-0.0144	0
78	SLU 35	0.03501	-0.00001	-0.07638	-0.0001	-0.1152	0
78	SLU 36	0.03501	-0.00001	-0.07638	-0.0001	-0.1152	0
78	SLU 37	-0.00113	0.00001	-0.02087	-0.0001	-0.0144	0
78	SLU 38	0.02597	0.00001	-0.0625	-0.0001	-0.09	0
78	SLU 39	0.03505	-0.00002	-0.07757	-0.0001	-0.1164	0
78	SLU 40	0.03505	-0.00001	-0.07757	-0.0001	-0.1164	0
78	SLU 41	-0.00108	0.00001	-0.02206	-0.0001	-0.0156	0
78	SLU 42	0.02602	0.00001	-0.06369	-0.0001	-0.0912	0
78	SLU 43	-0.00104	-0.00002	-0.02325	-0.0001	-0.0169	0
78	SLU 44	0.02606	-0.00002	-0.06488	-0.0001	-0.0925	0
78	SLU 45	-0.00104	-0.00001	-0.02325	-0.0001	-0.0169	0
78	SLU 46	0.02606	-0.00001	-0.06488	-0.0001	-0.0925	0
78	SLU 47	0.03465	-0.00012	-0.0777	0.0001	-0.116	0
78	SLU 48	0.03465	-0.00012	-0.0777	0.0001	-0.116	0
78	SLU 49	-0.00149	-0.0001	-0.02219	0	-0.0152	0
78	SLU 50	0.02562	-0.0001	-0.06382	0	-0.0908	0
78	SLU 51	0.0347	-0.00013	-0.07889	0.0001	-0.1173	0
78	SLU 52	0.0347	-0.00012	-0.07889	0.0001	-0.1173	0
78	SLU 53	-0.00144	-0.0001	-0.02338	0	-0.0165	0
78	SLU 54	0.02566	-0.0001	-0.06501	0	-0.0921	0
78	SLU 55	-0.0014	-0.00013	-0.02458	0.0001	-0.0177	0
78	SLU 56	0.02571	-0.00013	-0.06621	0.0001	-0.0933	0
78	SLU 57	-0.0014	-0.00012	-0.02458	0.0001	-0.0177	0
78	SLU 58	0.02571	-0.00012	-0.06621	0.0001	-0.0933	0
78	SLU 59	-0.00202	-0.00029	-0.02417	0.0003	-0.0165	-0.0001
78	SLU 60	0.02508	-0.00029	-0.0658	0.0003	-0.0921	-0.0001
78	SLU 61	-0.00202	-0.00028	-0.02417	0.0003	-0.0165	-0.0001
78	SLU 62	0.02508	-0.00028	-0.0658	0.0003	-0.0921	-0.0001
78	SLU 63	-0.00198	-0.00029	-0.02537	0.0003	-0.0178	-0.0001
78	SLU 64	0.02513	-0.00029	-0.067	0.0003	-0.0934	-0.0001
78	SLU 65	-0.00198	-0.00028	-0.02537	0.0003	-0.0178	-0.0001
78	SLU 66	0.02513	-0.00028	-0.067	0.0003	-0.0934	-0.0001
78	SLU 67	-0.00147	-0.00002	-0.02713	-0.0001	-0.0187	0
78	SLU 68	0.03467	-0.00002	-0.08264	-0.0001	-0.1195	0
78	SLU 69	0.03467	-0.00001	-0.08264	-0.0001	-0.1195	0
78	SLU 70	-0.00147	0	-0.02713	-0.0001	-0.0187	0
78	SLU 71	0.02563	0	-0.06876	-0.0001	-0.0943	0
78	SLU 72	0.03471	-0.00002	-0.08383	-0.0001	-0.1207	0
78	SLU 73	0.03471	-0.00001	-0.08383	-0.0001	-0.1207	0
78	SLU 74	-0.00142	0	-0.02832	-0.0001	-0.0199	0
78	SLU 75	0.02568	0	-0.06995	-0.0001	-0.0955	0
78	SLU 76	-0.00138	-0.00002	-0.02952	-0.0001	-0.0212	0
78	SLU 77	0.02573	-0.00002	-0.07115	-0.0001	-0.0968	0
78	SLU 78	-0.00138	-0.00001	-0.02952	-0.0001	-0.0212	0
78	SLU 79	0.02573	-0.00001	-0.07115	-0.0001	-0.0968	0
78	SLU 80	0.03431	-0.00013	-0.08396	0.0001	-0.1204	0
78	SLU 81	0.03431	-0.00012	-0.08396	0	-0.1204	0
78	SLU 82	-0.00183	-0.00011	-0.02845	0	-0.0195	0
78	SLU 83	0.02528	-0.00011	-0.07008	0	-0.0952	0
78	SLU 84	0.03436	-0.00013	-0.08515	0.0001	-0.1216	0
78	SLU 85	0.03436	-0.00012	-0.08515	0	-0.1216	0
78	SLU 86	-0.00178	-0.00011	-0.02965	0	-0.0208	0
78	SLU 87	0.02532	-0.00011	-0.07127	0	-0.0964	0
78	SLU 88	-0.00174	-0.00013	-0.03084	0.0001	-0.022	0
78	SLU 89	0.02537	-0.00013	-0.07247	0.0001	-0.0976	0
78	SLU 90	-0.00174	-0.00012	-0.03084	0	-0.022	0
78	SLU 91	0.02537	-0.00012	-0.07247	0	-0.0976	0
78	SLU 92	-0.00236	-0.0003	-0.03044	0.0003	-0.0208	-0.0001
78	SLU 93	0.02474	-0.0003	-0.07207	0.0003	-0.0964	-0.0001
78	SLU 94	-0.00236	-0.00029	-0.03044	0.0003	-0.0208	-0.0001
78	SLU 95	0.02474	-0.00029	-0.07207	0.0003	-0.0964	-0.0001
78	SLU 96	-0.00232	-0.0003	-0.03163	0.0003	-0.0221	-0.0001
78	SLU 97	0.02479	-0.0003	-0.07326	0.0003	-0.0977	-0.0001
78	SLU 98	-0.00232	-0.00029	-0.03163	0.0003	-0.0221	-0.0001
78	SLU 99	0.02479	-0.00029	-0.07326	0.0003	-0.0977	-0.0001
78	SLU 100	-0.00147	-0.00002	-0.02713	-0.0001	-0.0187	0
78	SLU 101	0.03467	-0.00002	-0.08264	-0.0001	-0.1195	0
78	SLU 102	0.03467	-0.00001	-0.08264	-0.0001	-0.1195	0
78	SLU 103	-0.00147	0	-0.02713	-0.0001	-0.0187	0
78	SLU 104	0.02563	0	-0.06876	-0.0001	-0.0943	0
78	SLU 105	0.03471	-0.00002	-0.08383	-0.0001	-0.1207	0
78	SLU 106	0.03471	-0.00001	-0.08383	-0.0001	-0.1207	0
78	SLU 107	-0.00142	0	-0.02832	-0.0001	-0.0199	0
78	SLU 108	0.02568	0	-0.06995	-0.0001	-0.0955	0
78	SLU 109	-0.00138	-0.00002	-0.02952	-0.0001	-0.0212	0
78	SLU 110	0.02573	-0.00002	-0.07115	-0.0001	-0.0968	0
78	SLU 111	-0.00138	-0.00001	-0.02952	-0.0001	-0.0212	0
78	SLU 112	0.02573	-0.00001	-0.07115	-0.0001	-0.0968	0
78	SLU 113	0.03431	-0.00013	-0.08396	0.0001	-0.1204	0
78	SLU 114	0.03431	-0.00012	-0.08396	0	-0.1204	0
78	SLU 115	-0.00183	-0.00011	-0.02845	0	-0.0195	0
78	SLU 116	0.02528	-0.00011	-0.07008	0	-0.0952	0
78	SLU 117	0.03436	-0.00013	-0.08515	0.0001	-0.1216	0
78	SLU 118	0.03436	-0.00012	-0.08515	0	-0.1216	0
78	SLU 119	-0.00178	-0.00011	-0.02965	0	-0.0208	0
78	SLU 120	0.02532	-0.00011	-0.07127	0	-0.0964	0
78	SLU 121	-0.00174	-0.00013	-0.03084	0.0001	-0.022	0
78	SLU 122	0.02537	-0.00013	-0.07247	0.0001	-0.0976	0
78	SLU 123	-0.00174	-0.00012	-0.03084	0	-0.022	0

Nodo	Cont.	Spostamento			Rotazione		
Ind.	N.br.	ux	uy	uz	rx	ry	rz
78	SLU 124	0.02537	-0.00012	-0.07247	0	-0.0976	0
78	SLU 125	-0.00236	-0.0003	-0.03044	0.0003	-0.0208	-0.0001
78	SLU 126	0.02474	-0.0003	-0.07207	0.0003	-0.0964	-0.0001
78	SLU 127	-0.00236	-0.00029	-0.03044	0.0003	-0.0208	-0.0001
78	SLU 128	0.02474	-0.00029	-0.07207	0.0003	-0.0964	-0.0001
78	SLU 129	-0.00232	-0.0003	-0.03163	0.0003	-0.0221	-0.0001
78	SLU 130	0.02479	-0.0003	-0.07326	0.0003	-0.0977	-0.0001
78	SLU 131	-0.00232	-0.00029	-0.03163	0.0003	-0.0221	-0.0001
78	SLU 132	0.02479	-0.00029	-0.07326	0.0003	-0.0977	-0.0001
78	SLE RA 1	-0.00113	-0.00002	-0.02087	-0.0001	-0.0144	0
78	SLE RA 2	0.02296	-0.00002	-0.05788	-0.0001	-0.0816	0
78	SLE RA 3	0.02296	-0.00001	-0.05788	-0.0001	-0.0816	0
78	SLE RA 4	-0.00113	0	-0.02087	-0.0001	-0.0144	0
78	SLE RA 5	0.01694	0	-0.04862	-0.0001	-0.0648	0
78	SLE RA 6	0.02299	-0.00002	-0.05867	-0.0001	-0.0824	0
78	SLE RA 7	0.02299	-0.00001	-0.05867	-0.0001	-0.0824	0
78	SLE RA 8	-0.0011	0	-0.02167	-0.0001	-0.0152	0
78	SLE RA 9	0.01697	0	-0.04942	-0.0001	-0.0656	0
78	SLE RA 10	-0.00107	-0.00002	-0.02246	-0.0001	-0.016	0
78	SLE RA 11	0.017	-0.00002	-0.05021	-0.0001	-0.0664	0
78	SLE RA 12	-0.00107	-0.00001	-0.02246	-0.0001	-0.016	0
78	SLE RA 13	0.017	-0.00001	-0.05021	-0.0001	-0.0664	0
78	SLE RA 14	0.02272	-0.00009	-0.05876	0	-0.0822	0
78	SLE RA 15	0.02272	-0.00008	-0.05876	0	-0.0822	0
78	SLE RA 16	-0.00137	-0.00008	-0.02175	0	-0.0149	0
78	SLE RA 17	0.0167	-0.00007	-0.04951	0	-0.0654	0
78	SLE RA 18	0.02275	-0.00009	-0.05955	0	-0.083	0
78	SLE RA 19	0.02275	-0.00008	-0.05955	0	-0.083	0
78	SLE RA 20	-0.00134	-0.00008	-0.02255	0	-0.0158	0
78	SLE RA 21	0.01673	-0.00007	-0.0503	0	-0.0662	0
78	SLE RA 22	-0.00131	-0.00009	-0.02334	0	-0.0166	0
78	SLE RA 23	0.01676	-0.00009	-0.05109	0	-0.067	0
78	SLE RA 24	-0.00131	-0.00009	-0.02334	0	-0.0166	0
78	SLE RA 25	0.01676	-0.00008	-0.05109	0	-0.067	0
78	SLE RA 26	-0.00173	-0.0002	-0.02307	0.0002	-0.0158	-0.0001
78	SLE RA 27	0.01634	-0.0002	-0.05083	0.0002	-0.0662	-0.0001
78	SLE RA 28	-0.00173	-0.00019	-0.02307	0.0002	-0.0158	-0.0001
78	SLE RA 29	0.01634	-0.00019	-0.05083	0.0002	-0.0662	-0.0001
78	SLE RA 30	-0.0017	-0.0002	-0.02387	0.0002	-0.0166	-0.0001
78	SLE RA 31	0.01637	-0.0002	-0.05162	0.0002	-0.067	-0.0001
78	SLE RA 32	-0.0017	-0.00019	-0.02387	0.0002	-0.0166	-0.0001
78	SLE RA 33	0.01637	-0.00019	-0.05162	0.0002	-0.067	-0.0001
78	SLE FR 1	-0.00113	-0.00002	-0.02087	-0.0001	-0.0144	0
78	SLE FR 2	0.01694	-0.00002	-0.04862	-0.0001	-0.0648	0
78	SLE FR 3	-0.00113	-0.00001	-0.02087	-0.0001	-0.0144	0
78	SLE FR 4	-0.00112	-0.00002	-0.02119	-0.0001	-0.0147	0
78	SLE FR 5	-0.00137	-0.00009	-0.02175	0	-0.0149	0
78	SLE QP 1	-0.00113	-0.00002	-0.02087	-0.0001	-0.0144	0
78	SLO 1	-0.01241	-0.1599	-0.02685	0.0773	-0.0146	0.0956
78	SLO 2	-0.01241	-0.1599	-0.02685	0.0773	-0.0146	0.0956
78	SLO 3	-0.01241	0.15987	-0.02685	-0.0774	-0.0146	-0.0955
78	SLO 4	-0.01241	0.15987	-0.02685	-0.0774	-0.0146	-0.0955
78	SLO 5	-0.00451	-0.53297	-0.02267	0.2577	-0.0144	0.3185
78	SLO 6	-0.00451	-0.53297	-0.02267	0.2577	-0.0144	0.3185
78	SLO 7	-0.00451	0.53294	-0.02267	-0.2579	-0.0144	-0.3185
78	SLO 8	-0.00451	0.53294	-0.02267	-0.2579	-0.0144	-0.3185
78	SLO 9	0.00225	-0.53297	-0.01908	0.2577	-0.0143	0.3185
78	SLO 10	0.00225	-0.53297	-0.01908	0.2577	-0.0143	0.3185
78	SLO 11	0.00225	0.53294	-0.01908	-0.2579	-0.0143	-0.3185
78	SLO 12	0.00225	0.53294	-0.01908	-0.2579	-0.0143	-0.3185
78	SLO 13	0.01015	-0.1599	-0.01489	0.0773	-0.0142	0.0956
78	SLO 14	0.01015	-0.1599	-0.01489	0.0773	-0.0142	0.0956
78	SLO 15	0.01015	0.15987	-0.01489	-0.0774	-0.0142	-0.0955
78	SLO 16	0.01015	0.15987	-0.01489	-0.0774	-0.0142	-0.0955
78	SLD 1	-0.01041	-0.14775	-0.02579	0.0714	-0.0145	0.0883
78	SLD 2	-0.01041	-0.14775	-0.02579	0.0714	-0.0145	0.0883
78	SLD 3	-0.01041	0.14772	-0.02579	-0.0715	-0.0145	-0.0883
78	SLD 4	-0.01041	0.14772	-0.02579	-0.0715	-0.0145	-0.0883
78	SLD 5	-0.00391	-0.49246	-0.02235	0.2381	-0.0144	0.2943
78	SLD 6	-0.00391	-0.49246	-0.02235	0.2381	-0.0144	0.2943
78	SLD 7	-0.00391	0.49243	-0.02235	-0.2383	-0.0144	-0.2943
78	SLD 8	-0.00391	0.49243	-0.02235	-0.2383	-0.0144	-0.2943
78	SLD 9	0.00165	-0.49246	-0.0194	0.2381	-0.0143	0.2943
78	SLD 10	0.00165	-0.49246	-0.0194	0.2381	-0.0143	0.2943
78	SLD 11	0.00165	0.49243	-0.0194	-0.2383	-0.0143	-0.2943
78	SLD 12	0.00165	0.49243	-0.0194	-0.2383	-0.0143	-0.2943
78	SLD 13	0.00815	-0.14775	-0.01595	0.0714	-0.0142	0.0883
78	SLD 14	0.00815	-0.14775	-0.01595	0.0714	-0.0142	0.0883
78	SLD 15	0.00815	0.14772	-0.01595	-0.0715	-0.0142	-0.0883
78	SLD 16	0.00815	0.14772	-0.01595	-0.0715	-0.0142	-0.0883
78	SLV 1	-0.02112	-0.38966	-0.03147	0.1884	-0.0148	0.2329
78	SLV 2	-0.02112	-0.38966	-0.03147	0.1884	-0.0148	0.2329
78	SLV 3	-0.02112	0.38963	-0.03147	-0.1885	-0.0148	-0.2328
78	SLV 4	-0.02112	0.38963	-0.03147	-0.1885	-0.0148	-0.2328
78	SLV 5	-0.00713	-1.29884	-0.02405	0.6282	-0.0145	0.7762
78	SLV 6	-0.00713	-1.29884	-0.02405	0.6282	-0.0145	0.7762
78	SLV 7	-0.00713	1.29881	-0.02405	-0.6283	-0.0145	-0.7761
78	SLV 8	-0.00713	1.29881	-0.02405	-0.6283	-0.0145	-0.7761
78	SLV 9	0.00487	-1.29884	-0.01769	0.6282	-0.0143	0.7762
78	SLV 10	0.00487	-1.29884	-0.01769	0.6282	-0.0143	0.7762
78	SLV 11	0.00487	1.29881	-0.01769	-0.6283	-0.0143	-0.7761
78	SLV 12	0.00487	1.29881	-0.01769	-0.6283	-0.0143	-0.7761
78	SLV 13	0.01886	-0.38966	-0.01028	0.1884	-0.014	0.2329
78	SLV 14	0.01886	-0.38966	-0.01028	0.1884	-0.014	0.2329
78	SLV 15	0.01886	0.38963	-0.01028	-0.1885	-0.014	-0.2328

Nodo	Cont.	Spostamento			Rotazione		
Ind.	N.br.	ux	uy	uz	rx	ry	rz
78	SLV 16	0.01886	0.38963	-0.01028	-0.1885	-0.014	-0.2328
79	SLU 1	0.00113	0	-0.02087	0	0.0144	0
79	SLU 2	-0.04461	0	-0.09754	0	0.1472	0
79	SLU 3	-0.04461	0.00001	-0.09754	0	0.1472	0
79	SLU 4	0.00113	0.00002	-0.02087	0	0.0144	0
79	SLU 5	-0.03318	0.00002	-0.07837	0	0.114	0
79	SLU 6	-0.04498	0	-0.09869	0	0.1485	0
79	SLU 7	-0.04498	0.00001	-0.09869	0	0.1485	0
79	SLU 8	0.00076	0.00002	-0.02202	0	0.0157	0
79	SLU 9	-0.03354	0.00002	-0.07952	0	0.1153	0
79	SLU 10	0.0004	0	-0.02317	0	0.017	0
79	SLU 11	-0.03391	0	-0.08067	0	0.1166	0
79	SLU 12	0.0004	0.00001	-0.02317	0	0.017	0
79	SLU 13	-0.03391	0.00001	-0.08067	0	0.1166	0
79	SLU 14	-0.04473	-0.00011	-0.09798	0.0002	0.1474	0
79	SLU 15	-0.04473	-0.0001	-0.09798	0.0001	0.1474	0
79	SLU 16	0.00102	-0.00008	-0.02131	0.0001	0.0146	0
79	SLU 17	-0.03329	-0.00008	-0.07881	0.0001	0.1142	0
79	SLU 18	-0.04509	-0.00011	-0.09913	0.0002	0.1487	0
79	SLU 19	-0.04509	-0.0001	-0.09913	0.0001	0.1487	0
79	SLU 20	0.00065	-0.00008	-0.02246	0.0001	0.0159	0
79	SLU 21	-0.03366	-0.00008	-0.07996	0.0001	0.1155	0
79	SLU 22	0.00028	-0.00011	-0.02361	0.0002	0.0172	0
79	SLU 23	-0.03402	-0.00011	-0.08111	0.0002	0.1168	0
79	SLU 24	0.00028	-0.0001	-0.02361	0.0001	0.0172	0
79	SLU 25	-0.03402	-0.0001	-0.08111	0.0001	0.1168	0
79	SLU 26	0.00084	-0.00027	-0.02198	0.0004	0.0149	0.0001
79	SLU 27	-0.03346	-0.00027	-0.07948	0.0004	0.1145	0.0001
79	SLU 28	0.00084	-0.00026	-0.02198	0.0004	0.0149	0.0001
79	SLU 29	-0.03346	-0.00026	-0.07948	0.0004	0.1145	0.0001
79	SLU 30	0.00048	-0.00027	-0.02312	0.0004	0.0162	0.0001
79	SLU 31	-0.03383	-0.00027	-0.08063	0.0004	0.1158	0.0001
79	SLU 32	0.00048	-0.00026	-0.02312	0.0004	0.0162	0.0001
79	SLU 33	-0.03383	-0.00026	-0.08063	0.0004	0.1158	0.0001
79	SLU 34	0.00113	0	-0.02087	0	0.0144	0
79	SLU 35	-0.04461	0	-0.09754	0	0.1472	0
79	SLU 36	-0.04461	0.00001	-0.09754	0	0.1472	0
79	SLU 37	0.00113	0.00002	-0.02087	0	0.0144	0
79	SLU 38	-0.03318	0.00002	-0.07837	0	0.114	0
79	SLU 39	-0.04498	0	-0.09869	0	0.1485	0
79	SLU 40	-0.04498	0.00001	-0.09869	0	0.1485	0
79	SLU 41	0.00076	0.00002	-0.02202	0	0.0157	0
79	SLU 42	-0.03354	0.00002	-0.07952	0	0.1153	0
79	SLU 43	0.0004	0	-0.02317	0	0.017	0
79	SLU 44	-0.03391	0	-0.08067	0	0.1166	0
79	SLU 45	0.0004	0.00001	-0.02317	0	0.017	0
79	SLU 46	-0.03391	0.00001	-0.08067	0	0.1166	0
79	SLU 47	-0.04473	-0.00011	-0.09798	0.0002	0.1474	0
79	SLU 48	-0.04473	-0.0001	-0.09798	0.0001	0.1474	0
79	SLU 49	0.00102	-0.00008	-0.02131	0.0001	0.0146	0
79	SLU 50	-0.03329	-0.00008	-0.07881	0.0001	0.1142	0
79	SLU 51	-0.04509	-0.00011	-0.09913	0.0002	0.1487	0
79	SLU 52	-0.04509	-0.0001	-0.09913	0.0001	0.1487	0
79	SLU 53	0.00065	-0.00008	-0.02246	0.0001	0.0159	0
79	SLU 54	-0.03366	-0.00008	-0.07996	0.0001	0.1155	0
79	SLU 55	0.00028	-0.00011	-0.02361	0.0002	0.0172	0
79	SLU 56	-0.03402	-0.00011	-0.08111	0.0002	0.1168	0
79	SLU 57	0.00028	-0.0001	-0.02361	0.0001	0.0172	0
79	SLU 58	-0.03402	-0.0001	-0.08111	0.0001	0.1168	0
79	SLU 59	0.00084	-0.00027	-0.02198	0.0004	0.0149	0.0001
79	SLU 60	-0.03346	-0.00027	-0.07948	0.0004	0.1145	0.0001
79	SLU 61	0.00084	-0.00026	-0.02198	0.0004	0.0149	0.0001
79	SLU 62	-0.03346	-0.00026	-0.07948	0.0004	0.1145	0.0001
79	SLU 63	0.00048	-0.00027	-0.02312	0.0004	0.0162	0.0001
79	SLU 64	-0.03383	-0.00027	-0.08063	0.0004	0.1158	0.0001
79	SLU 65	0.00048	-0.00026	-0.02312	0.0004	0.0162	0.0001
79	SLU 66	-0.03383	-0.00026	-0.08063	0.0004	0.1158	0.0001
79	SLU 67	0.00147	0	-0.02713	0	0.0187	0
79	SLU 68	-0.04427	0	-0.1038	0	0.1515	0
79	SLU 69	-0.04427	0.00001	-0.1038	0	0.1515	0
79	SLU 70	0.00147	0.00002	-0.02713	0	0.0187	0
79	SLU 71	-0.03284	0.00002	-0.08463	0	0.1183	0
79	SLU 72	-0.04464	0	-0.10495	0	0.1528	0
79	SLU 73	-0.04464	0.00001	-0.10495	0	0.1528	0
79	SLU 74	0.0011	0.00002	-0.02828	0	0.02	0
79	SLU 75	-0.0332	0.00002	-0.08578	0	0.1196	0
79	SLU 76	0.00074	0	-0.02943	0	0.0213	0
79	SLU 77	-0.03357	0	-0.08693	0	0.1209	0
79	SLU 78	0.00074	0.00001	-0.02943	0	0.0213	0
79	SLU 79	-0.03357	0.00001	-0.08693	0	0.1209	0
79	SLU 80	-0.04439	-0.00011	-0.10424	0.0002	0.1517	0
79	SLU 81	-0.04439	-0.0001	-0.10424	0.0001	0.1517	0
79	SLU 82	0.00135	-0.00008	-0.02757	0.0001	0.0189	0
79	SLU 83	-0.03295	-0.00008	-0.08507	0.0001	0.1185	0
79	SLU 84	-0.04475	-0.00011	-0.10539	0.0002	0.153	0
79	SLU 85	-0.04475	-0.0001	-0.10539	0.0001	0.153	0
79	SLU 86	0.00099	-0.00008	-0.02872	0.0001	0.0202	0
79	SLU 87	-0.03332	-0.00008	-0.08622	0.0001	0.1198	0
79	SLU 88	0.00062	-0.00011	-0.02987	0.0002	0.0215	0
79	SLU 89	-0.03368	-0.00011	-0.08737	0.0002	0.1211	0
79	SLU 90	0.00062	-0.0001	-0.02987	0.0001	0.0215	0
79	SLU 91	-0.03368	-0.0001	-0.08737	0.0001	0.1211	0
79	SLU 92	0.00118	-0.00027	-0.02824	0.0004	0.0192	0.0001
79	SLU 93	-0.03312	-0.00027	-0.08574	0.0004	0.1188	0.0001
79	SLU 94	0.00118	-0.00026	-0.02824	0.0004	0.0192	0.0001

Nodo	Cont.	Spostamento			Rotazione		
Ind.	N.br.	ux	uy	uz	rx	ry	rz
79	SLU 95	-0.03312	-0.00026	-0.08574	0.0004	0.1188	0.0001
79	SLU 96	0.00082	-0.00027	-0.02939	0.0004	0.0205	0.0001
79	SLU 97	-0.03349	-0.00027	-0.08689	0.0004	0.1201	0.0001
79	SLU 98	0.00082	-0.00026	-0.02939	0.0004	0.0205	0.0001
79	SLU 99	-0.03349	-0.00026	-0.08689	0.0004	0.1201	0.0001
79	SLU 100	0.00147	0	-0.02713	0	0.0187	0
79	SLU 101	-0.04427	0	-0.1038	0	0.1515	0
79	SLU 102	-0.04427	0.00001	-0.1038	0	0.1515	0
79	SLU 103	0.00147	0.00002	-0.02713	0	0.0187	0
79	SLU 104	-0.03284	0.00002	-0.08463	0	0.1183	0
79	SLU 105	-0.04464	0	-0.10495	0	0.1528	0
79	SLU 106	-0.04464	0.00001	-0.10495	0	0.1528	0
79	SLU 107	0.0011	0.00002	-0.02828	0	0.02	0
79	SLU 108	-0.0332	0.00002	-0.08578	0	0.1196	0
79	SLU 109	0.00074	0	-0.02943	0	0.0213	0
79	SLU 110	-0.03357	0	-0.08693	0	0.1209	0
79	SLU 111	0.00074	0.00001	-0.02943	0	0.0213	0
79	SLU 112	-0.03357	0.00001	-0.08693	0	0.1209	0
79	SLU 113	-0.04439	-0.00011	-0.10424	0.0002	0.1517	0
79	SLU 114	-0.04439	-0.0001	-0.10424	0.0001	0.1517	0
79	SLU 115	0.00135	-0.00008	-0.02757	0.0001	0.0189	0
79	SLU 116	-0.03295	-0.00008	-0.08507	0.0001	0.1185	0
79	SLU 117	-0.04475	-0.00011	-0.10539	0.0002	0.153	0
79	SLU 118	-0.04475	-0.0001	-0.10539	0.0001	0.153	0
79	SLU 119	0.00099	-0.00008	-0.02872	0.0001	0.0202	0
79	SLU 120	-0.03332	-0.00008	-0.08622	0.0001	0.1198	0
79	SLU 121	0.00062	-0.00011	-0.02987	0.0002	0.0215	0
79	SLU 122	-0.03368	-0.00011	-0.08737	0.0002	0.1211	0
79	SLU 123	0.00062	-0.0001	-0.02987	0.0001	0.0215	0
79	SLU 124	-0.03368	-0.0001	-0.08737	0.0001	0.1211	0
79	SLU 125	0.00118	-0.00027	-0.02824	0.0004	0.0192	0.0001
79	SLU 126	-0.03312	-0.00027	-0.08574	0.0004	0.1188	0.0001
79	SLU 127	0.00118	-0.00026	-0.02824	0.0004	0.0192	0.0001
79	SLU 128	-0.03312	-0.00026	-0.08574	0.0004	0.1188	0.0001
79	SLU 129	0.00082	-0.00027	-0.02939	0.0004	0.0205	0.0001
79	SLU 130	-0.03349	-0.00027	-0.08689	0.0004	0.1201	0.0001
79	SLU 131	0.00082	-0.00026	-0.02939	0.0004	0.0205	0.0001
79	SLU 132	-0.03349	-0.00026	-0.08689	0.0004	0.1201	0.0001
79	SLE RA 1	0.00113	0	-0.02087	0	0.0144	0
79	SLE RA 2	-0.02937	0	-0.07198	0	0.1029	0
79	SLE RA 3	-0.02937	0.00001	-0.07198	0	0.1029	0
79	SLE RA 4	0.00113	0.00002	-0.02087	0	0.0144	0
79	SLE RA 5	-0.02174	0.00002	-0.0592	0	0.0808	0
79	SLE RA 6	-0.02961	0	-0.07275	0	0.1038	0
79	SLE RA 7	-0.02961	0.00001	-0.07275	0	0.1038	0
79	SLE RA 8	0.00089	0.00002	-0.02164	0	0.0152	0
79	SLE RA 9	-0.02199	0.00002	-0.05997	0	0.0817	0
79	SLE RA 10	0.00064	0	-0.0224	0	0.0161	0
79	SLE RA 11	-0.02223	0	-0.06074	0	0.0825	0
79	SLE RA 12	0.00064	0.00001	-0.0224	0	0.0161	0
79	SLE RA 13	-0.02223	0.00001	-0.06074	0	0.0825	0
79	SLE RA 14	-0.02944	-0.00007	-0.07228	0.0001	0.1031	0
79	SLE RA 15	-0.02944	-0.00007	-0.07228	0.0001	0.1031	0
79	SLE RA 16	0.00105	-0.00006	-0.02117	0.0001	0.0145	0
79	SLE RA 17	-0.02182	-0.00006	-0.0595	0.0001	0.0809	0
79	SLE RA 18	-0.02969	-0.00007	-0.07304	0.0001	0.1039	0
79	SLE RA 19	-0.02969	-0.00007	-0.07304	0.0001	0.1039	0
79	SLE RA 20	0.00081	-0.00006	-0.02193	0.0001	0.0154	0
79	SLE RA 21	-0.02206	-0.00006	-0.06027	0.0001	0.0818	0
79	SLE RA 22	0.00057	-0.00007	-0.0227	0.0001	0.0162	0
79	SLE RA 23	-0.02231	-0.00007	-0.06103	0.0001	0.0827	0
79	SLE RA 24	0.00057	-0.00007	-0.0227	0.0001	0.0162	0
79	SLE RA 25	-0.02231	-0.00007	-0.06103	0.0001	0.0827	0
79	SLE RA 26	0.00094	-0.00018	-0.02161	0.0003	0.0147	0.0001
79	SLE RA 27	-0.02193	-0.00018	-0.05994	0.0003	0.0811	0.0001
79	SLE RA 28	0.00094	-0.00017	-0.02161	0.0003	0.0147	0.0001
79	SLE RA 29	-0.02193	-0.00017	-0.05994	0.0003	0.0811	0.0001
79	SLE RA 30	0.0007	-0.00018	-0.02237	0.0003	0.0156	0.0001
79	SLE RA 31	-0.02218	-0.00018	-0.06071	0.0003	0.082	0.0001
79	SLE RA 32	0.0007	-0.00017	-0.02237	0.0003	0.0156	0.0001
79	SLE RA 33	-0.02218	-0.00017	-0.06071	0.0003	0.082	0.0001
79	SLE FR 1	0.00113	0	-0.02087	0	0.0144	0
79	SLE FR 2	-0.02174	0	-0.0592	0	0.0808	0
79	SLE FR 3	0.00113	0.00001	-0.02087	0	0.0144	0
79	SLE FR 4	0.00103	0	-0.02118	0	0.0147	0
79	SLE FR 5	0.00105	-0.00007	-0.02117	0.0001	0.0145	0
79	SLE QP 1	0.00113	0	-0.02087	0	0.0144	0
79	SLO 1	-0.01015	-0.15989	-0.01489	0.0773	0.0142	-0.0956
79	SLO 2	-0.01015	-0.15989	-0.01489	0.0773	0.0142	-0.0956
79	SLO 3	-0.01015	0.15989	-0.01489	-0.0773	0.0142	0.0956
79	SLO 4	-0.01015	0.15989	-0.01489	-0.0773	0.0142	0.0956
79	SLO 5	-0.00225	-0.53295	-0.01908	0.2577	0.0143	-0.3185
79	SLO 6	-0.00225	-0.53295	-0.01908	0.2577	0.0143	-0.3185
79	SLO 7	-0.00225	0.53295	-0.01908	-0.2577	0.0143	0.3185
79	SLO 8	-0.00225	0.53295	-0.01908	-0.2577	0.0143	0.3185
79	SLO 9	0.00451	-0.53295	-0.02267	0.2577	0.0144	-0.3185
79	SLO 10	0.00451	-0.53295	-0.02267	0.2577	0.0144	-0.3185
79	SLO 11	0.00451	0.53295	-0.02267	-0.2577	0.0144	0.3185
79	SLO 12	0.00451	0.53295	-0.02267	-0.2577	0.0144	0.3185
79	SLO 13	0.01241	-0.15989	-0.02685	0.0773	0.0146	-0.0956
79	SLO 14	0.01241	-0.15989	-0.02685	0.0773	0.0146	-0.0956
79	SLO 15	0.01241	0.15989	-0.02685	-0.0773	0.0146	0.0956
79	SLO 16	0.01241	0.15989	-0.02685	-0.0773	0.0146	0.0956
79	SLD 1	-0.00815	-0.14773	-0.01595	0.0714	0.0142	-0.0883
79	SLD 2	-0.00815	-0.14773	-0.01595	0.0714	0.0142	-0.0883

Nodo	Cont.	Spostamento			Rotazione		
Ind.	N.br.	ux	uy	uz	rx	ry	rz
79	SLD 3	-0.00815	0.14773	-0.01595	-0.0714	0.0142	0.0883
79	SLD 4	-0.00815	0.14773	-0.01595	-0.0714	0.0142	0.0883
79	SLD 5	-0.00165	-0.49244	-0.0194	0.2381	0.0143	-0.2943
79	SLD 6	-0.00165	-0.49244	-0.0194	0.2381	0.0143	-0.2943
79	SLD 7	-0.00165	0.49244	-0.0194	-0.2381	0.0143	0.2943
79	SLD 8	-0.00165	0.49244	-0.0194	-0.2381	0.0143	0.2943
79	SLD 9	0.00391	-0.49244	-0.02235	0.2381	0.0144	-0.2943
79	SLD 10	0.00391	-0.49244	-0.02235	0.2381	0.0144	-0.2943
79	SLD 11	0.00391	0.49244	-0.02235	-0.2381	0.0144	0.2943
79	SLD 12	0.00391	0.49244	-0.02235	-0.2381	0.0144	0.2943
79	SLD 13	0.01041	-0.14773	-0.02579	0.0714	0.0145	-0.0883
79	SLD 14	0.01041	-0.14773	-0.02579	0.0714	0.0145	-0.0883
79	SLD 15	0.01041	0.14773	-0.02579	-0.0714	0.0145	0.0883
79	SLD 16	0.01041	0.14773	-0.02579	-0.0714	0.0145	0.0883
79	SLV 1	-0.01886	-0.38964	-0.01028	0.1884	0.014	-0.2329
79	SLV 2	-0.01886	-0.38964	-0.01028	0.1884	0.014	-0.2329
79	SLV 3	-0.01886	0.38964	-0.01028	-0.1884	0.014	0.2329
79	SLV 4	-0.01886	0.38964	-0.01028	-0.1884	0.014	0.2329
79	SLV 5	-0.00487	-1.29881	-0.01769	0.6281	0.0143	-0.7763
79	SLV 6	-0.00487	-1.29881	-0.01769	0.6281	0.0143	-0.7763
79	SLV 7	-0.00487	1.29881	-0.01769	-0.6281	0.0143	0.7763
79	SLV 8	-0.00487	1.29881	-0.01769	-0.6281	0.0143	0.7763
79	SLV 9	0.00713	-1.29881	-0.02405	0.6281	0.0145	-0.7763
79	SLV 10	0.00713	-1.29881	-0.02405	0.6281	0.0145	-0.7763
79	SLV 11	0.00713	1.29881	-0.02405	-0.6281	0.0145	0.7763
79	SLV 12	0.00713	1.29881	-0.02405	-0.6281	0.0145	0.7763
79	SLV 13	0.02112	-0.38964	-0.03147	0.1884	0.0148	-0.2329
79	SLV 14	0.02112	-0.38964	-0.03147	0.1884	0.0148	-0.2329
79	SLV 15	0.02112	0.38964	-0.03147	-0.1884	0.0148	0.2329
79	SLV 16	0.02112	0.38964	-0.03147	-0.1884	0.0148	0.2329
80	SLU 1	-0.00113	0	-0.02087	0	-0.0144	0
80	SLU 2	0.04461	0	-0.09754	0	-0.1472	0
80	SLU 3	0.04461	0.00001	-0.09754	0	-0.1472	0
80	SLU 4	-0.00113	0.00002	-0.02087	0	-0.0144	0
80	SLU 5	0.03318	0.00002	-0.07837	0	-0.114	0
80	SLU 6	0.04479	0	-0.09893	0	-0.1488	0
80	SLU 7	0.04479	0.00001	-0.09893	0	-0.1488	0
80	SLU 8	-0.00096	0.00002	-0.02226	0	-0.016	0
80	SLU 9	0.03335	0.00002	-0.07976	0	-0.1156	0
80	SLU 10	-0.00078	0	-0.02365	0	-0.0176	0
80	SLU 11	0.03353	0	-0.08115	0	-0.1172	0
80	SLU 12	-0.00078	0.00001	-0.02365	0	-0.0176	0
80	SLU 13	0.03353	0.00001	-0.08115	0	-0.1172	0
80	SLU 14	0.04441	-0.00011	-0.09838	0.0002	-0.1479	0
80	SLU 15	0.04441	-0.0001	-0.09838	0.0001	-0.1479	0
80	SLU 16	-0.00134	-0.00009	-0.02171	0.0001	-0.0151	0
80	SLU 17	0.03297	-0.00008	-0.07921	0.0001	-0.1147	0
80	SLU 18	0.04458	-0.00011	-0.09977	0.0002	-0.1495	0
80	SLU 19	0.04458	-0.0001	-0.09977	0.0001	-0.1495	0
80	SLU 20	-0.00116	-0.00009	-0.0231	0.0001	-0.0167	0
80	SLU 21	0.03315	-0.00008	-0.0806	0.0001	-0.1163	0
80	SLU 22	-0.00099	-0.00011	-0.02449	0.0002	-0.0183	0
80	SLU 23	0.03332	-0.00011	-0.082	0.0002	-0.1179	0
80	SLU 24	-0.00099	-0.0001	-0.02449	0.0001	-0.0183	0
80	SLU 25	0.03332	-0.0001	-0.082	0.0001	-0.1179	0
80	SLU 26	-0.00164	-0.00027	-0.02298	0.0004	-0.0161	-0.0001
80	SLU 27	0.03266	-0.00027	-0.08048	0.0004	-0.1158	-0.0001
80	SLU 28	-0.00164	-0.00026	-0.02298	0.0004	-0.0161	-0.0001
80	SLU 29	0.03266	-0.00026	-0.08048	0.0004	-0.1158	-0.0001
80	SLU 30	-0.00147	-0.00027	-0.02437	0.0004	-0.0177	-0.0001
80	SLU 31	0.03284	-0.00027	-0.08187	0.0004	-0.1174	-0.0001
80	SLU 32	-0.00147	-0.00026	-0.02437	0.0004	-0.0177	-0.0001
80	SLU 33	0.03284	-0.00026	-0.08187	0.0004	-0.1174	-0.0001
80	SLU 34	-0.00113	0	-0.02087	0	-0.0144	0
80	SLU 35	0.04461	0	-0.09754	0	-0.1472	0
80	SLU 36	0.04461	0.00001	-0.09754	0	-0.1472	0
80	SLU 37	-0.00113	0.00002	-0.02087	0	-0.0144	0
80	SLU 38	0.03318	0.00002	-0.07837	0	-0.114	0
80	SLU 39	0.04479	0	-0.09893	0	-0.1488	0
80	SLU 40	0.04479	0.00001	-0.09893	0	-0.1488	0
80	SLU 41	-0.00096	0.00002	-0.02226	0	-0.016	0
80	SLU 42	0.03335	0.00002	-0.07976	0	-0.1156	0
80	SLU 43	-0.00078	0	-0.02365	0	-0.0176	0
80	SLU 44	0.03353	0	-0.08115	0	-0.1172	0
80	SLU 45	-0.00078	0.00001	-0.02365	0	-0.0176	0
80	SLU 46	0.03353	0.00001	-0.08115	0	-0.1172	0
80	SLU 47	0.04441	-0.00011	-0.09838	0.0002	-0.1479	0
80	SLU 48	0.04441	-0.0001	-0.09838	0.0001	-0.1479	0
80	SLU 49	-0.00134	-0.00009	-0.02171	0.0001	-0.0151	0
80	SLU 50	0.03297	-0.00008	-0.07921	0.0001	-0.1147	0
80	SLU 51	0.04458	-0.00011	-0.09977	0.0002	-0.1495	0
80	SLU 52	0.04458	-0.0001	-0.09977	0.0001	-0.1495	0
80	SLU 53	-0.00116	-0.00009	-0.0231	0.0001	-0.0167	0
80	SLU 54	0.03315	-0.00008	-0.0806	0.0001	-0.1163	0
80	SLU 55	-0.00099	-0.00011	-0.02449	0.0002	-0.0183	0
80	SLU 56	0.03332	-0.00011	-0.082	0.0002	-0.1179	0
80	SLU 57	-0.00099	-0.0001	-0.02449	0.0001	-0.0183	0
80	SLU 58	0.03332	-0.0001	-0.082	0.0001	-0.1179	0
80	SLU 59	-0.00164	-0.00027	-0.02298	0.0004	-0.0161	-0.0001
80	SLU 60	0.03266	-0.00027	-0.08048	0.0004	-0.1158	-0.0001
80	SLU 61	-0.00164	-0.00026	-0.02298	0.0004	-0.0161	-0.0001
80	SLU 62	0.03266	-0.00026	-0.08048	0.0004	-0.1158	-0.0001
80	SLU 63	-0.00147	-0.00027	-0.02437	0.0004	-0.0177	-0.0001
80	SLU 64	0.03284	-0.00027	-0.08187	0.0004	-0.1174	-0.0001
80	SLU 65	-0.00147	-0.00026	-0.02437	0.0004	-0.0177	-0.0001

Nodo	Cont.	Spostamento			Rotazione		
Ind.	N.br.	ux	uy	uz	rx	ry	rz
80	SLU 66	0.03284	-0.00026	-0.08187	0.0004	-0.1174	-0.0001
80	SLU 67	-0.00147	0	-0.02713	0	-0.0187	0
80	SLU 68	0.04427	0	-0.1038	0	-0.1515	0
80	SLU 69	0.04427	0.00001	-0.1038	0	-0.1515	0
80	SLU 70	-0.00147	0.00002	-0.02713	0	-0.0187	0
80	SLU 71	0.03284	0.00002	-0.08463	0	-0.1183	0
80	SLU 72	0.04445	0	-0.10519	0	-0.1531	0
80	SLU 73	0.04445	0.00001	-0.10519	0	-0.1531	0
80	SLU 74	-0.00129	0.00002	-0.02852	0	-0.0203	0
80	SLU 75	0.03301	0.00002	-0.08602	0	-0.1199	0
80	SLU 76	-0.00112	0	-0.02991	0	-0.0219	0
80	SLU 77	0.03319	0	-0.08741	0	-0.1215	0
80	SLU 78	-0.00112	0.00001	-0.02991	0	-0.0219	0
80	SLU 79	0.03319	0.00001	-0.08741	0	-0.1215	0
80	SLU 80	0.04407	-0.00011	-0.10464	0.0002	-0.1522	0
80	SLU 81	0.04407	-0.0001	-0.10464	0.0001	-0.1522	0
80	SLU 82	-0.00167	-0.00009	-0.02798	0.0001	-0.0194	0
80	SLU 83	0.03263	-0.00008	-0.08548	0.0001	-0.119	0
80	SLU 84	0.04424	-0.00011	-0.10603	0.0002	-0.1538	0
80	SLU 85	0.04424	-0.0001	-0.10603	0.0001	-0.1538	0
80	SLU 86	-0.0015	-0.00009	-0.02937	0.0001	-0.021	0
80	SLU 87	0.03281	-0.00008	-0.08687	0.0001	-0.1206	0
80	SLU 88	-0.00132	-0.00011	-0.03076	0.0002	-0.0226	0
80	SLU 89	0.03298	-0.00011	-0.08826	0.0002	-0.1222	0
80	SLU 90	-0.00132	-0.0001	-0.03076	0.0001	-0.0226	0
80	SLU 91	0.03298	-0.0001	-0.08826	0.0001	-0.1222	0
80	SLU 92	-0.00198	-0.00027	-0.02924	0.0004	-0.0204	-0.0001
80	SLU 93	0.03232	-0.00027	-0.08674	0.0004	-0.1201	-0.0001
80	SLU 94	-0.00198	-0.00026	-0.02924	0.0004	-0.0204	-0.0001
80	SLU 95	0.03232	-0.00026	-0.08674	0.0004	-0.1201	-0.0001
80	SLU 96	-0.00181	-0.00027	-0.03063	0.0004	-0.022	-0.0001
80	SLU 97	0.0325	-0.00027	-0.08813	0.0004	-0.1217	-0.0001
80	SLU 98	-0.00181	-0.00026	-0.03063	0.0004	-0.022	-0.0001
80	SLU 99	0.0325	-0.00026	-0.08813	0.0004	-0.1217	-0.0001
80	SLU 100	-0.00147	0	-0.02713	0	-0.0187	0
80	SLU 101	0.04427	0	-0.1038	0	-0.1515	0
80	SLU 102	0.04427	0.00001	-0.1038	0	-0.1515	0
80	SLU 103	-0.00147	0.00002	-0.02713	0	-0.0187	0
80	SLU 104	0.03284	0.00002	-0.08463	0	-0.1183	0
80	SLU 105	0.04445	0	-0.10519	0	-0.1531	0
80	SLU 106	0.04445	0.00001	-0.10519	0	-0.1531	0
80	SLU 107	-0.00129	0.00002	-0.02852	0	-0.0203	0
80	SLU 108	0.03301	0.00002	-0.08602	0	-0.1199	0
80	SLU 109	-0.00112	0	-0.02991	0	-0.0219	0
80	SLU 110	0.03319	0	-0.08741	0	-0.1215	0
80	SLU 111	-0.00112	0.00001	-0.02991	0	-0.0219	0
80	SLU 112	0.03319	0.00001	-0.08741	0	-0.1215	0
80	SLU 113	0.04407	-0.00011	-0.10464	0.0002	-0.1522	0
80	SLU 114	0.04407	-0.0001	-0.10464	0.0001	-0.1522	0
80	SLU 115	-0.00167	-0.00009	-0.02798	0.0001	-0.0194	0
80	SLU 116	0.03263	-0.00008	-0.08548	0.0001	-0.119	0
80	SLU 117	0.04424	-0.00011	-0.10603	0.0002	-0.1538	0
80	SLU 118	0.04424	-0.0001	-0.10603	0.0001	-0.1538	0
80	SLU 119	-0.0015	-0.00009	-0.02937	0.0001	-0.021	0
80	SLU 120	0.03281	-0.00008	-0.08687	0.0001	-0.1206	0
80	SLU 121	-0.00132	-0.00011	-0.03076	0.0002	-0.0226	0
80	SLU 122	0.03298	-0.00011	-0.08826	0.0002	-0.1222	0
80	SLU 123	-0.00132	-0.0001	-0.03076	0.0001	-0.0226	0
80	SLU 124	0.03298	-0.0001	-0.08826	0.0001	-0.1222	0
80	SLU 125	-0.00198	-0.00027	-0.02924	0.0004	-0.0204	-0.0001
80	SLU 126	0.03232	-0.00027	-0.08674	0.0004	-0.1201	-0.0001
80	SLU 127	-0.00198	-0.00026	-0.02924	0.0004	-0.0204	-0.0001
80	SLU 128	0.03232	-0.00026	-0.08674	0.0004	-0.1201	-0.0001
80	SLU 129	-0.00181	-0.00027	-0.03063	0.0004	-0.022	-0.0001
80	SLU 130	0.0325	-0.00027	-0.08813	0.0004	-0.1217	-0.0001
80	SLU 131	-0.00181	-0.00026	-0.03063	0.0004	-0.022	-0.0001
80	SLU 132	0.0325	-0.00026	-0.08813	0.0004	-0.1217	-0.0001
80	SLE RA 1	-0.00113	0	-0.02087	0	-0.0144	0
80	SLE RA 2	0.02937	0	-0.07198	0	-0.1029	0
80	SLE RA 3	0.02937	0.00001	-0.07198	0	-0.1029	0
80	SLE RA 4	-0.00113	0.00002	-0.02087	0	-0.0144	0
80	SLE RA 5	0.02174	0.00002	-0.0592	0	-0.0808	0
80	SLE RA 6	0.02948	0	-0.07291	0	-0.104	0
80	SLE RA 7	0.02948	0.00001	-0.07291	0	-0.104	0
80	SLE RA 8	-0.00101	0.00002	-0.0218	0	-0.0154	0
80	SLE RA 9	0.02186	0.00002	-0.06013	0	-0.0819	0
80	SLE RA 10	-0.0009	0	-0.02272	0	-0.0165	0
80	SLE RA 11	0.02197	0	-0.06106	0	-0.0829	0
80	SLE RA 12	-0.0009	0.00001	-0.02272	0	-0.0165	0
80	SLE RA 13	0.02197	0.00001	-0.06106	0	-0.0829	0
80	SLE RA 14	0.02923	-0.00007	-0.07254	0.0001	-0.1034	0
80	SLE RA 15	0.02923	-0.00007	-0.07254	0.0001	-0.1034	0
80	SLE RA 16	-0.00127	-0.00006	-0.02143	0.0001	-0.0148	0
80	SLE RA 17	0.0216	-0.00006	-0.05977	0.0001	-0.0813	0
80	SLE RA 18	0.02934	-0.00007	-0.07347	0.0001	-0.1045	0
80	SLE RA 19	0.02934	-0.00007	-0.07347	0.0001	-0.1045	0
80	SLE RA 20	-0.00115	-0.00006	-0.02236	0.0001	-0.0159	0
80	SLE RA 21	0.02172	-0.00006	-0.06069	0.0001	-0.0823	0
80	SLE RA 22	-0.00103	-0.00007	-0.02329	0.0001	-0.017	0
80	SLE RA 23	0.02184	-0.00007	-0.06162	0.0001	-0.0834	0
80	SLE RA 24	-0.00103	-0.00007	-0.02329	0.0001	-0.017	0
80	SLE RA 25	0.02184	-0.00007	-0.06162	0.0001	-0.0834	0
80	SLE RA 26	-0.00147	-0.00018	-0.02228	0.0003	-0.0155	-0.0001
80	SLE RA 27	0.0214	-0.00018	-0.06061	0.0003	-0.082	-0.0001
80	SLE RA 28	-0.00147	-0.00017	-0.02228	0.0003	-0.0155	-0.0001

Nodo	Cont.	Spostamento			Rotazione		
Ind.	N.br.	ux	uy	uz	rx	ry	rz
80	SLE RA 29	0.0214	-0.00017	-0.06061	0.0003	-0.082	-0.0001
80	SLE RA 30	-0.00136	-0.00018	-0.0232	0.0003	-0.0166	-0.0001
80	SLE RA 31	0.02152	-0.00018	-0.06154	0.0003	-0.083	-0.0001
80	SLE RA 32	-0.00136	-0.00017	-0.0232	0.0003	-0.0166	-0.0001
80	SLE RA 33	0.02152	-0.00017	-0.06154	0.0003	-0.083	-0.0001
80	SLE FR 1	-0.00113	0	-0.02087	0	-0.0144	0
80	SLE FR 2	0.02174	0	-0.0592	0	-0.0808	0
80	SLE FR 3	-0.00113	0.00001	-0.02087	0	-0.0144	0
80	SLE FR 4	-0.00108	0	-0.02124	0	-0.0148	0
80	SLE FR 5	-0.00127	-0.00007	-0.02143	0.0001	-0.0148	0
80	SLE QP 1	-0.00113	0	-0.02087	0	-0.0144	0
80	SLO 1	-0.01241	-0.15989	-0.02685	0.0773	-0.0146	0.0956
80	SLO 2	-0.01241	-0.15989	-0.02685	0.0773	-0.0146	0.0956
80	SLO 3	-0.01241	0.15989	-0.02685	-0.0773	-0.0146	-0.0956
80	SLO 4	-0.01241	0.15989	-0.02685	-0.0773	-0.0146	-0.0956
80	SLO 5	-0.00451	-0.53295	-0.02267	0.2577	-0.0144	0.3185
80	SLO 6	-0.00451	-0.53295	-0.02267	0.2577	-0.0144	0.3185
80	SLO 7	-0.00451	0.53295	-0.02267	-0.2577	-0.0144	-0.3185
80	SLO 8	-0.00451	0.53295	-0.02267	-0.2577	-0.0144	-0.3185
80	SLO 9	0.00225	-0.53295	-0.01908	0.2577	-0.0143	0.3185
80	SLO 10	0.00225	-0.53295	-0.01908	0.2577	-0.0143	0.3185
80	SLO 11	0.00225	0.53295	-0.01908	-0.2577	-0.0143	-0.3185
80	SLO 12	0.00225	0.53295	-0.01908	-0.2577	-0.0143	-0.3185
80	SLO 13	0.01015	-0.15989	-0.01489	0.0773	-0.0142	0.0956
80	SLO 14	0.01015	-0.15989	-0.01489	0.0773	-0.0142	0.0956
80	SLO 15	0.01015	0.15989	-0.01489	-0.0773	-0.0142	-0.0956
80	SLO 16	0.01015	0.15989	-0.01489	-0.0773	-0.0142	-0.0956
80	SLD 1	-0.01041	-0.14773	-0.02579	0.0714	-0.0145	0.0883
80	SLD 2	-0.01041	-0.14773	-0.02579	0.0714	-0.0145	0.0883
80	SLD 3	-0.01041	0.14773	-0.02579	-0.0714	-0.0145	-0.0883
80	SLD 4	-0.01041	0.14773	-0.02579	-0.0714	-0.0145	-0.0883
80	SLD 5	-0.00391	-0.49244	-0.02235	0.2381	-0.0144	0.2943
80	SLD 6	-0.00391	-0.49244	-0.02235	0.2381	-0.0144	0.2943
80	SLD 7	-0.00391	0.49244	-0.02235	-0.2381	-0.0144	-0.2943
80	SLD 8	-0.00391	0.49244	-0.02235	-0.2381	-0.0144	-0.2943
80	SLD 9	0.00165	-0.49244	-0.0194	0.2381	-0.0143	0.2943
80	SLD 10	0.00165	-0.49244	-0.0194	0.2381	-0.0143	0.2943
80	SLD 11	0.00165	0.49244	-0.0194	-0.2381	-0.0143	-0.2943
80	SLD 12	0.00165	0.49244	-0.0194	-0.2381	-0.0143	-0.2943
80	SLD 13	0.00815	-0.14773	-0.01595	0.0714	-0.0142	0.0883
80	SLD 14	0.00815	-0.14773	-0.01595	0.0714	-0.0142	0.0883
80	SLD 15	0.00815	0.14773	-0.01595	-0.0714	-0.0142	-0.0883
80	SLD 16	0.00815	0.14773	-0.01595	-0.0714	-0.0142	-0.0883
80	SLV 1	-0.02112	-0.38964	-0.03147	0.1884	-0.0148	0.2329
80	SLV 2	-0.02112	-0.38964	-0.03147	0.1884	-0.0148	0.2329
80	SLV 3	-0.02112	0.38964	-0.03147	-0.1884	-0.0148	-0.2329
80	SLV 4	-0.02112	0.38964	-0.03147	-0.1884	-0.0148	-0.2329
80	SLV 5	-0.00713	-1.29881	-0.02405	0.6281	-0.0145	0.7763
80	SLV 6	-0.00713	-1.29881	-0.02405	0.6281	-0.0145	0.7763
80	SLV 7	-0.00713	1.29881	-0.02405	-0.6281	-0.0145	-0.7763
80	SLV 8	-0.00713	1.29881	-0.02405	-0.6281	-0.0145	-0.7763
80	SLV 9	0.00487	-1.29881	-0.01769	0.6281	-0.0143	0.7763
80	SLV 10	0.00487	-1.29881	-0.01769	0.6281	-0.0143	0.7763
80	SLV 11	0.00487	1.29881	-0.01769	-0.6281	-0.0143	-0.7763
80	SLV 12	0.00487	1.29881	-0.01769	-0.6281	-0.0143	-0.7763
80	SLV 13	0.01886	-0.38964	-0.01028	0.1884	-0.014	0.2329
80	SLV 14	0.01886	-0.38964	-0.01028	0.1884	-0.014	0.2329
80	SLV 15	0.01886	0.38964	-0.01028	-0.1884	-0.014	-0.2329
80	SLV 16	0.01886	0.38964	-0.01028	-0.1884	-0.014	-0.2329
81	SLU 1	0.00113	0.00002	-0.02087	0.0001	0.0144	0
81	SLU 2	-0.0542	0.00002	-0.11869	0.0001	0.1792	0
81	SLU 3	-0.0542	0.00002	-0.11869	0.0001	0.1792	0
81	SLU 4	0.00113	0.00004	-0.02087	0	0.0144	0
81	SLU 5	-0.04037	0.00004	-0.09423	0	0.138	0
81	SLU 6	-0.05454	0.00002	-0.12006	0.0001	0.1808	0
81	SLU 7	-0.05454	0.00002	-0.12006	0.0001	0.1808	0
81	SLU 8	0.00079	0.00004	-0.02224	0	0.016	0
81	SLU 9	-0.04071	0.00004	-0.0956	0	0.1396	0
81	SLU 10	0.00046	0.00002	-0.02361	0.0001	0.0176	0
81	SLU 11	-0.04104	0.00002	-0.09697	0.0001	0.1413	0
81	SLU 12	0.00046	0.00003	-0.02361	0.0001	0.0176	0
81	SLU 13	-0.04104	0.00003	-0.09697	0.0001	0.1413	0
81	SLU 14	-0.0542	-0.00009	-0.11869	0.0002	0.1792	0
81	SLU 15	-0.0542	-0.00008	-0.11869	0.0002	0.1792	0
81	SLU 16	0.00113	-0.00007	-0.02087	0.0002	0.0144	0
81	SLU 17	-0.04037	-0.00007	-0.09423	0.0002	0.138	0
81	SLU 18	-0.05454	-0.00009	-0.12006	0.0002	0.1808	0
81	SLU 19	-0.05454	-0.00008	-0.12006	0.0002	0.1808	0
81	SLU 20	0.00079	-0.00007	-0.02224	0.0002	0.016	0
81	SLU 21	-0.04071	-0.00007	-0.0956	0.0002	0.1396	0
81	SLU 22	0.00046	-0.00009	-0.02361	0.0002	0.0176	0
81	SLU 23	-0.04104	-0.00009	-0.09697	0.0002	0.1413	0
81	SLU 24	0.00046	-0.00008	-0.02361	0.0002	0.0176	0
81	SLU 25	-0.04104	-0.00008	-0.09697	0.0002	0.1413	0
81	SLU 26	0.00113	-0.00025	-0.02087	0.0005	0.0144	0.0001
81	SLU 27	-0.04037	-0.00025	-0.09423	0.0005	0.138	0.0001
81	SLU 28	0.00113	-0.00024	-0.02087	0.0005	0.0144	0.0001
81	SLU 29	-0.04037	-0.00024	-0.09423	0.0005	0.138	0.0001
81	SLU 30	0.00079	-0.00025	-0.02224	0.0005	0.016	0.0001
81	SLU 31	-0.04071	-0.00025	-0.0956	0.0005	0.1396	0.0001
81	SLU 32	0.00079	-0.00024	-0.02224	0.0005	0.016	0.0001
81	SLU 33	-0.04071	-0.00024	-0.0956	0.0005	0.1396	0.0001
81	SLU 34	0.00113	0.00002	-0.02087	0.0001	0.0144	0
81	SLU 35	-0.0542	0.00002	-0.11869	0.0001	0.1792	0
81	SLU 36	-0.0542	0.00002	-0.11869	0.0001	0.1792	0

Nodo	Cont.	Spostamento			Rotazione		
Ind.	N.br.	ux	uy	uz	rx	ry	rz
81	SLU 37	0.00113	0.00004	-0.02087	0	0.0144	0
81	SLU 38	-0.04037	0.00004	-0.09423	0	0.138	0
81	SLU 39	-0.05454	0.00002	-0.12006	0.0001	0.1808	0
81	SLU 40	-0.05454	0.00002	-0.12006	0.0001	0.1808	0
81	SLU 41	0.00079	0.00004	-0.02224	0	0.016	0
81	SLU 42	-0.04071	0.00004	-0.0956	0	0.1396	0
81	SLU 43	0.00046	0.00002	-0.02361	0.0001	0.0176	0
81	SLU 44	-0.04104	0.00002	-0.09697	0.0001	0.1413	0
81	SLU 45	0.00046	0.00003	-0.02361	0.0001	0.0176	0
81	SLU 46	-0.04104	0.00003	-0.09697	0.0001	0.1413	0
81	SLU 47	-0.0542	-0.00009	-0.11869	0.0002	0.1792	0
81	SLU 48	-0.0542	-0.00008	-0.11869	0.0002	0.1792	0
81	SLU 49	0.00113	-0.00007	-0.02087	0.0002	0.0144	0
81	SLU 50	-0.04037	-0.00007	-0.09423	0.0002	0.138	0
81	SLU 51	-0.05454	-0.00009	-0.12006	0.0002	0.1808	0
81	SLU 52	-0.05454	-0.00008	-0.12006	0.0002	0.1808	0
81	SLU 53	0.00079	-0.00007	-0.02224	0.0002	0.016	0
81	SLU 54	-0.04071	-0.00007	-0.0956	0.0002	0.1396	0
81	SLU 55	0.00046	-0.00009	-0.02361	0.0002	0.0176	0
81	SLU 56	-0.04104	-0.00009	-0.09697	0.0002	0.1413	0
81	SLU 57	0.00046	-0.00008	-0.02361	0.0002	0.0176	0
81	SLU 58	-0.04104	-0.00008	-0.09697	0.0002	0.1413	0
81	SLU 59	0.00113	-0.00025	-0.02087	0.0005	0.0144	0.0001
81	SLU 60	-0.04037	-0.00025	-0.09423	0.0005	0.138	0.0001
81	SLU 61	0.00113	-0.00024	-0.02087	0.0005	0.0144	0.0001
81	SLU 62	-0.04037	-0.00024	-0.09423	0.0005	0.138	0.0001
81	SLU 63	0.00079	-0.00025	-0.02224	0.0005	0.016	0.0001
81	SLU 64	-0.04071	-0.00025	-0.0956	0.0005	0.1396	0.0001
81	SLU 65	0.00079	-0.00024	-0.02224	0.0005	0.016	0.0001
81	SLU 66	-0.04071	-0.00024	-0.0956	0.0005	0.1396	0.0001
81	SLU 67	0.00147	0.00002	-0.02713	0.0001	0.0187	0
81	SLU 68	-0.05386	0.00002	-0.12495	0.0001	0.1835	0
81	SLU 69	-0.05386	0.00003	-0.12495	0.0001	0.1835	0
81	SLU 70	0.00147	0.00004	-0.02713	0.0001	0.0187	0
81	SLU 71	-0.04003	0.00004	-0.10049	0.0001	0.1423	0
81	SLU 72	-0.0542	0.00002	-0.12632	0.0001	0.1852	0
81	SLU 73	-0.0542	0.00003	-0.12632	0.0001	0.1852	0
81	SLU 74	0.00113	0.00005	-0.0285	0.0001	0.0203	0
81	SLU 75	-0.04037	0.00004	-0.10186	0.0001	0.1439	0
81	SLU 76	0.0008	0.00002	-0.02987	0.0001	0.022	0
81	SLU 77	-0.0407	0.00002	-0.10323	0.0001	0.1456	0
81	SLU 78	0.0008	0.00003	-0.02987	0.0001	0.022	0
81	SLU 79	-0.0407	0.00003	-0.10323	0.0001	0.1456	0
81	SLU 80	-0.05386	-0.00009	-0.12495	0.0003	0.1835	0.0001
81	SLU 81	-0.05386	-0.00008	-0.12495	0.0002	0.1835	0
81	SLU 82	0.00147	-0.00006	-0.02713	0.0002	0.0187	0
81	SLU 83	-0.04003	-0.00006	-0.10049	0.0002	0.1423	0
81	SLU 84	-0.0542	-0.00009	-0.12632	0.0003	0.1852	0.0001
81	SLU 85	-0.0542	-0.00008	-0.12632	0.0002	0.1852	0
81	SLU 86	0.00113	-0.00006	-0.0285	0.0002	0.0203	0
81	SLU 87	-0.04037	-0.00006	-0.10186	0.0002	0.1439	0
81	SLU 88	0.0008	-0.00008	-0.02987	0.0003	0.022	0.0001
81	SLU 89	-0.0407	-0.00008	-0.10323	0.0003	0.1456	0.0001
81	SLU 90	0.0008	-0.00007	-0.02987	0.0002	0.022	0
81	SLU 91	-0.0407	-0.00007	-0.10323	0.0002	0.1456	0
81	SLU 92	0.00147	-0.00024	-0.02713	0.0005	0.0187	0.0001
81	SLU 93	-0.04003	-0.00024	-0.10049	0.0005	0.1423	0.0001
81	SLU 94	0.00147	-0.00023	-0.02713	0.0005	0.0187	0.0001
81	SLU 95	-0.04003	-0.00024	-0.10049	0.0005	0.1423	0.0001
81	SLU 96	0.00113	-0.00024	-0.0285	0.0005	0.0203	0.0001
81	SLU 97	-0.04037	-0.00024	-0.10186	0.0005	0.1439	0.0001
81	SLU 98	0.00113	-0.00023	-0.0285	0.0005	0.0203	0.0001
81	SLU 99	-0.04037	-0.00023	-0.10186	0.0005	0.1439	0.0001
81	SLU 100	0.00147	0.00002	-0.02713	0.0001	0.0187	0
81	SLU 101	-0.05386	0.00002	-0.12495	0.0001	0.1835	0
81	SLU 102	-0.05386	0.00003	-0.12495	0.0001	0.1835	0
81	SLU 103	0.00147	0.00004	-0.02713	0.0001	0.0187	0
81	SLU 104	-0.04003	0.00004	-0.10049	0.0001	0.1423	0
81	SLU 105	-0.0542	0.00002	-0.12632	0.0001	0.1852	0
81	SLU 106	-0.0542	0.00003	-0.12632	0.0001	0.1852	0
81	SLU 107	0.00113	0.00005	-0.0285	0.0001	0.0203	0
81	SLU 108	-0.04037	0.00004	-0.10186	0.0001	0.1439	0
81	SLU 109	0.0008	0.00002	-0.02987	0.0001	0.022	0
81	SLU 110	-0.0407	0.00002	-0.10323	0.0001	0.1456	0
81	SLU 111	0.0008	0.00003	-0.02987	0.0001	0.022	0
81	SLU 112	-0.0407	0.00003	-0.10323	0.0001	0.1456	0
81	SLU 113	-0.05386	-0.00009	-0.12495	0.0003	0.1835	0.0001
81	SLU 114	-0.05386	-0.00008	-0.12495	0.0002	0.1835	0
81	SLU 115	0.00147	-0.00006	-0.02713	0.0002	0.0187	0
81	SLU 116	-0.04003	-0.00006	-0.10049	0.0002	0.1423	0
81	SLU 117	-0.0542	-0.00009	-0.12632	0.0003	0.1852	0.0001
81	SLU 118	-0.0542	-0.00008	-0.12632	0.0002	0.1852	0
81	SLU 119	0.00113	-0.00006	-0.0285	0.0002	0.0203	0
81	SLU 120	-0.04037	-0.00006	-0.10186	0.0002	0.1439	0
81	SLU 121	0.0008	-0.00008	-0.02987	0.0003	0.022	0.0001
81	SLU 122	-0.0407	-0.00008	-0.10323	0.0003	0.1456	0.0001
81	SLU 123	0.0008	-0.00007	-0.02987	0.0002	0.022	0
81	SLU 124	-0.0407	-0.00007	-0.10323	0.0002	0.1456	0
81	SLU 125	0.00147	-0.00024	-0.02713	0.0005	0.0187	0.0001
81	SLU 126	-0.04003	-0.00024	-0.10049	0.0005	0.1423	0.0001
81	SLU 127	0.00147	-0.00023	-0.02713	0.0005	0.0187	0.0001
81	SLU 128	-0.04003	-0.00024	-0.10049	0.0005	0.1423	0.0001
81	SLU 129	0.00113	-0.00024	-0.0285	0.0005	0.0203	0.0001
81	SLU 130	-0.04037	-0.00024	-0.10186	0.0005	0.1439	0.0001
81	SLU 131	0.00113	-0.00023	-0.0285	0.0005	0.0203	0.0001

Nodo	Cont.	Spostamento			Rotazione		
Ind.	N.br.	ux	uy	uz	rx	ry	rz
81	SLU 132	-0.04037	-0.00023	-0.10186	0.0005	0.1439	0.0001
81	SLE RA 1	0.00113	0.00002	-0.02087	0.0001	0.0144	0
81	SLE RA 2	-0.03576	0.00002	-0.08608	0.0001	0.1243	0
81	SLE RA 3	-0.03576	0.00002	-0.08608	0.0001	0.1243	0
81	SLE RA 4	0.00113	0.00003	-0.02087	0	0.0144	0
81	SLE RA 5	-0.02654	0.00003	-0.06978	0	0.0968	0
81	SLE RA 6	-0.03598	0.00002	-0.08699	0.0001	0.1254	0
81	SLE RA 7	-0.03598	0.00002	-0.08699	0.0001	0.1254	0
81	SLE RA 8	0.00091	0.00003	-0.02178	0	0.0155	0
81	SLE RA 9	-0.02676	0.00003	-0.07069	0	0.0979	0
81	SLE RA 10	0.00068	0.00002	-0.0227	0.0001	0.0166	0
81	SLE RA 11	-0.02698	0.00002	-0.0716	0.0001	0.099	0
81	SLE RA 12	0.00068	0.00002	-0.0227	0.0001	0.0166	0
81	SLE RA 13	-0.02698	0.00002	-0.0716	0.0001	0.099	0
81	SLE RA 14	-0.03576	-0.00006	-0.08608	0.0002	0.1243	0
81	SLE RA 15	-0.03576	-0.00005	-0.08608	0.0002	0.1243	0
81	SLE RA 16	0.00113	-0.00004	-0.02087	0.0002	0.0144	0
81	SLE RA 17	-0.02654	-0.00004	-0.06978	0.0002	0.0968	0
81	SLE RA 18	-0.03598	-0.00005	-0.08699	0.0002	0.1254	0
81	SLE RA 19	-0.03598	-0.00005	-0.08699	0.0002	0.1254	0
81	SLE RA 20	0.00091	-0.00004	-0.02178	0.0002	0.0155	0
81	SLE RA 21	-0.02676	-0.00004	-0.07069	0.0002	0.0979	0
81	SLE RA 22	0.00068	-0.00005	-0.0227	0.0002	0.0166	0
81	SLE RA 23	-0.02698	-0.00005	-0.0716	0.0002	0.099	0
81	SLE RA 24	0.00068	-0.00005	-0.0227	0.0002	0.0166	0
81	SLE RA 25	-0.02698	-0.00005	-0.0716	0.0002	0.099	0
81	SLE RA 26	0.00113	-0.00016	-0.02087	0.0003	0.0144	0.0001
81	SLE RA 27	-0.02654	-0.00016	-0.06978	0.0003	0.0968	0.0001
81	SLE RA 28	0.00113	-0.00015	-0.02087	0.0003	0.0144	0.0001
81	SLE RA 29	-0.02654	-0.00015	-0.06978	0.0003	0.0968	0.0001
81	SLE RA 30	0.00091	-0.00016	-0.02178	0.0003	0.0155	0.0001
81	SLE RA 31	-0.02676	-0.00016	-0.07069	0.0003	0.0979	0.0001
81	SLE RA 32	0.00091	-0.00015	-0.02178	0.0003	0.0155	0.0001
81	SLE RA 33	-0.02676	-0.00015	-0.07069	0.0003	0.0979	0.0001
81	SLE FR 1	0.00113	0.00002	-0.02087	0.0001	0.0144	0
81	SLE FR 2	-0.02654	0.00002	-0.06978	0.0001	0.0968	0
81	SLE FR 3	0.00113	0.00002	-0.02087	0.0001	0.0144	0
81	SLE FR 4	0.00104	0.00002	-0.02124	0.0001	0.0148	0
81	SLE FR 5	0.00113	-0.00005	-0.02087	0.0002	0.0144	0
81	SLE QP 1	0.00113	0.00002	-0.02087	0.0001	0.0144	0
81	SLO 1	-0.01015	-0.15987	-0.01489	0.0774	0.0142	-0.0955
81	SLO 2	-0.01015	-0.15987	-0.01489	0.0774	0.0142	-0.0955
81	SLO 3	-0.01015	0.1599	-0.01489	-0.0773	0.0142	0.0956
81	SLO 4	-0.01015	0.1599	-0.01489	-0.0773	0.0142	0.0956
81	SLO 5	-0.00225	-0.53294	-0.01908	0.2579	0.0143	-0.3185
81	SLO 6	-0.00225	-0.53294	-0.01908	0.2579	0.0143	-0.3185
81	SLO 7	-0.00225	0.53297	-0.01908	-0.2577	0.0143	0.3185
81	SLO 8	-0.00225	0.53297	-0.01908	-0.2577	0.0143	0.3185
81	SLO 9	0.00451	-0.53294	-0.02267	0.2579	0.0144	-0.3185
81	SLO 10	0.00451	-0.53294	-0.02267	0.2579	0.0144	-0.3185
81	SLO 11	0.00451	0.53297	-0.02267	-0.2577	0.0144	0.3185
81	SLO 12	0.00451	0.53297	-0.02267	-0.2577	0.0144	0.3185
81	SLO 13	0.01241	-0.15987	-0.02685	0.0774	0.0146	-0.0955
81	SLO 14	0.01241	-0.15987	-0.02685	0.0774	0.0146	-0.0955
81	SLO 15	0.01241	0.1599	-0.02685	-0.0773	0.0146	0.0956
81	SLO 16	0.01241	0.1599	-0.02685	-0.0773	0.0146	0.0956
81	SLD 1	-0.00815	-0.14772	-0.01595	0.0715	0.0142	-0.0883
81	SLD 2	-0.00815	-0.14772	-0.01595	0.0715	0.0142	-0.0883
81	SLD 3	-0.00815	0.14775	-0.01595	-0.0714	0.0142	0.0883
81	SLD 4	-0.00815	0.14775	-0.01595	-0.0714	0.0142	0.0883
81	SLD 5	-0.00165	-0.49243	-0.0194	0.2383	0.0143	-0.2943
81	SLD 6	-0.00165	-0.49243	-0.0194	0.2383	0.0143	-0.2943
81	SLD 7	-0.00165	0.49246	-0.0194	-0.2381	0.0143	0.2943
81	SLD 8	-0.00165	0.49246	-0.0194	-0.2381	0.0143	0.2943
81	SLD 9	0.00391	-0.49243	-0.02235	0.2383	0.0144	-0.2943
81	SLD 10	0.00391	-0.49243	-0.02235	0.2383	0.0144	-0.2943
81	SLD 11	0.00391	0.49246	-0.02235	-0.2381	0.0144	0.2943
81	SLD 12	0.00391	0.49246	-0.02235	-0.2381	0.0144	0.2943
81	SLD 13	0.01041	-0.14772	-0.02579	0.0715	0.0145	-0.0883
81	SLD 14	0.01041	-0.14772	-0.02579	0.0715	0.0145	-0.0883
81	SLD 15	0.01041	0.14775	-0.02579	-0.0714	0.0145	0.0883
81	SLD 16	0.01041	0.14775	-0.02579	-0.0714	0.0145	0.0883
81	SLV 1	-0.01886	-0.38963	-0.01028	0.1885	0.014	-0.2328
81	SLV 2	-0.01886	-0.38963	-0.01028	0.1885	0.014	-0.2328
81	SLV 3	-0.01886	0.38966	-0.01028	-0.1884	0.014	0.2329
81	SLV 4	-0.01886	0.38966	-0.01028	-0.1884	0.014	0.2329
81	SLV 5	-0.00487	-1.29881	-0.01769	0.6283	0.0143	-0.7761
81	SLV 6	-0.00487	-1.29881	-0.01769	0.6283	0.0143	-0.7761
81	SLV 7	-0.00487	1.29884	-0.01769	-0.6282	0.0143	0.7762
81	SLV 8	-0.00487	1.29884	-0.01769	-0.6282	0.0143	0.7762
81	SLV 9	0.00713	-1.29881	-0.02405	0.6283	0.0145	-0.7761
81	SLV 10	0.00713	-1.29881	-0.02405	0.6283	0.0145	-0.7761
81	SLV 11	0.00713	1.29884	-0.02405	-0.6282	0.0145	0.7762
81	SLV 12	0.00713	1.29884	-0.02405	-0.6282	0.0145	0.7762
81	SLV 13	0.02112	-0.38963	-0.03147	0.1885	0.0148	-0.2328
81	SLV 14	0.02112	-0.38963	-0.03147	0.1885	0.0148	-0.2328
81	SLV 15	0.02112	0.38966	-0.03147	-0.1884	0.0148	0.2329
81	SLV 16	0.02112	0.38966	-0.03147	-0.1884	0.0148	0.2329
82	SLU 1	-0.00113	0.00002	-0.02087	0.0001	-0.0144	0
82	SLU 2	0.0542	0.00002	-0.11869	0.0001	-0.1792	0
82	SLU 3	0.0542	0.00002	-0.11869	0.0001	-0.1792	0
82	SLU 4	-0.00113	0.00004	-0.02087	0	-0.0144	0
82	SLU 5	0.04037	0.00004	-0.09423	0	-0.138	0
82	SLU 6	0.05454	0.00002	-0.12006	0.0001	-0.1808	0
82	SLU 7	0.05454	0.00002	-0.12006	0.0001	-0.1808	0

Nodo	Cont.	Spostamento			Rotazione		
Ind.	N.br.	ux	uy	uz	rx	ry	rz
82	SLU 8	-0.00079	0.00004	-0.02224	0	-0.016	0
82	SLU 9	0.04071	0.00004	-0.0956	0	-0.1396	0
82	SLU 10	-0.00046	0.00002	-0.02361	0.0001	-0.0176	0
82	SLU 11	0.04104	0.00002	-0.09697	0.0001	-0.1413	0
82	SLU 12	-0.00046	0.00003	-0.02361	0.0001	-0.0176	0
82	SLU 13	0.04104	0.00003	-0.09697	0.0001	-0.1413	0
82	SLU 14	0.0542	-0.00009	-0.11869	0.0002	-0.1792	0
82	SLU 15	0.0542	-0.00008	-0.11869	0.0002	-0.1792	0
82	SLU 16	-0.00113	-0.00007	-0.02087	0.0002	-0.0144	0
82	SLU 17	0.04037	-0.00007	-0.09423	0.0002	-0.138	0
82	SLU 18	0.05454	-0.00009	-0.12006	0.0002	-0.1808	0
82	SLU 19	0.05454	-0.00008	-0.12006	0.0002	-0.1808	0
82	SLU 20	-0.00079	-0.00007	-0.02224	0.0002	-0.016	0
82	SLU 21	0.04071	-0.00007	-0.0956	0.0002	-0.1396	0
82	SLU 22	-0.00046	-0.00009	-0.02361	0.0002	-0.0176	0
82	SLU 23	0.04104	-0.00009	-0.09697	0.0002	-0.1413	0
82	SLU 24	-0.00046	-0.00008	-0.02361	0.0002	-0.0176	0
82	SLU 25	0.04104	-0.00008	-0.09697	0.0002	-0.1413	0
82	SLU 26	-0.00113	-0.00025	-0.02087	0.0005	-0.0144	-0.0001
82	SLU 27	0.04037	-0.00025	-0.09423	0.0005	-0.138	-0.0001
82	SLU 28	-0.00113	-0.00024	-0.02087	0.0005	-0.0144	-0.0001
82	SLU 29	0.04037	-0.00024	-0.09423	0.0005	-0.138	-0.0001
82	SLU 30	-0.00079	-0.00025	-0.02224	0.0005	-0.016	-0.0001
82	SLU 31	0.04071	-0.00025	-0.0956	0.0005	-0.1396	-0.0001
82	SLU 32	-0.00079	-0.00024	-0.02224	0.0005	-0.016	-0.0001
82	SLU 33	0.04071	-0.00024	-0.0956	0.0005	-0.1396	-0.0001
82	SLU 34	-0.00113	0.00002	-0.02087	0.0001	-0.0144	0
82	SLU 35	0.0542	0.00002	-0.11869	0.0001	-0.1792	0
82	SLU 36	0.0542	0.00002	-0.11869	0.0001	-0.1792	0
82	SLU 37	-0.00113	0.00004	-0.02087	0	-0.0144	0
82	SLU 38	0.04037	0.00004	-0.09423	0	-0.138	0
82	SLU 39	0.05454	0.00002	-0.12006	0.0001	-0.1808	0
82	SLU 40	0.05454	0.00002	-0.12006	0.0001	-0.1808	0
82	SLU 41	-0.00079	0.00004	-0.02224	0	-0.016	0
82	SLU 42	0.04071	0.00004	-0.0956	0	-0.1396	0
82	SLU 43	-0.00046	0.00002	-0.02361	0.0001	-0.0176	0
82	SLU 44	0.04104	0.00002	-0.09697	0.0001	-0.1413	0
82	SLU 45	-0.00046	0.00003	-0.02361	0.0001	-0.0176	0
82	SLU 46	0.04104	0.00003	-0.09697	0.0001	-0.1413	0
82	SLU 47	0.0542	-0.00009	-0.11869	0.0002	-0.1792	0
82	SLU 48	0.0542	-0.00008	-0.11869	0.0002	-0.1792	0
82	SLU 49	-0.00113	-0.00007	-0.02087	0.0002	-0.0144	0
82	SLU 50	0.04037	-0.00007	-0.09423	0.0002	-0.138	0
82	SLU 51	0.05454	-0.00009	-0.12006	0.0002	-0.1808	0
82	SLU 52	0.05454	-0.00008	-0.12006	0.0002	-0.1808	0
82	SLU 53	-0.00079	-0.00007	-0.02224	0.0002	-0.016	0
82	SLU 54	0.04071	-0.00007	-0.0956	0.0002	-0.1396	0
82	SLU 55	-0.00046	-0.00009	-0.02361	0.0002	-0.0176	0
82	SLU 56	0.04104	-0.00009	-0.09697	0.0002	-0.1413	0
82	SLU 57	-0.00046	-0.00008	-0.02361	0.0002	-0.0176	0
82	SLU 58	0.04104	-0.00008	-0.09697	0.0002	-0.1413	0
82	SLU 59	-0.00113	-0.00025	-0.02087	0.0005	-0.0144	-0.0001
82	SLU 60	0.04037	-0.00025	-0.09423	0.0005	-0.138	-0.0001
82	SLU 61	-0.00113	-0.00024	-0.02087	0.0005	-0.0144	-0.0001
82	SLU 62	0.04037	-0.00024	-0.09423	0.0005	-0.138	-0.0001
82	SLU 63	-0.00079	-0.00025	-0.02224	0.0005	-0.016	-0.0001
82	SLU 64	0.04071	-0.00025	-0.0956	0.0005	-0.1396	-0.0001
82	SLU 65	-0.00079	-0.00024	-0.02224	0.0005	-0.016	-0.0001
82	SLU 66	0.04071	-0.00024	-0.0956	0.0005	-0.1396	-0.0001
82	SLU 67	-0.00147	0.00002	-0.02713	0.0001	-0.0187	0
82	SLU 68	0.05386	0.00002	-0.12495	0.0001	-0.1835	0
82	SLU 69	0.05386	0.00003	-0.12495	0.0001	-0.1835	0
82	SLU 70	-0.00147	0.00004	-0.02713	0.0001	-0.0187	0
82	SLU 71	0.04003	0.00004	-0.10049	0.0001	-0.1423	0
82	SLU 72	0.0542	0.00002	-0.12632	0.0001	-0.1852	0
82	SLU 73	0.0542	0.00003	-0.12632	0.0001	-0.1852	0
82	SLU 74	-0.00113	0.00005	-0.0285	0.0001	-0.0203	0
82	SLU 75	0.04037	0.00004	-0.10186	0.0001	-0.1439	0
82	SLU 76	-0.0008	0.00002	-0.02987	0.0001	-0.022	0
82	SLU 77	0.0407	0.00002	-0.10323	0.0001	-0.1456	0
82	SLU 78	-0.0008	0.00003	-0.02987	0.0001	-0.022	0
82	SLU 79	0.0407	0.00003	-0.10323	0.0001	-0.1456	0
82	SLU 80	0.05386	-0.00009	-0.12495	0.0003	-0.1835	-0.0001
82	SLU 81	0.05386	-0.00008	-0.12495	0.0002	-0.1835	0
82	SLU 82	-0.00147	-0.00006	-0.02713	0.0002	-0.0187	0
82	SLU 83	0.04003	-0.00006	-0.10049	0.0002	-0.1423	0
82	SLU 84	0.0542	-0.00009	-0.12632	0.0003	-0.1852	-0.0001
82	SLU 85	0.0542	-0.00008	-0.12632	0.0002	-0.1852	0
82	SLU 86	-0.00113	-0.00006	-0.0285	0.0002	-0.0203	0
82	SLU 87	0.04037	-0.00006	-0.10186	0.0002	-0.1439	0
82	SLU 88	-0.0008	-0.00008	-0.02987	0.0003	-0.022	-0.0001
82	SLU 89	0.0407	-0.00008	-0.10323	0.0003	-0.1456	-0.0001
82	SLU 90	-0.0008	-0.00007	-0.02987	0.0002	-0.022	0
82	SLU 91	0.0407	-0.00008	-0.10323	0.0002	-0.1456	0
82	SLU 92	-0.00147	-0.00024	-0.02713	0.0005	-0.0187	-0.0001
82	SLU 93	0.04003	-0.00024	-0.10049	0.0005	-0.1423	-0.0001
82	SLU 94	-0.00147	-0.00023	-0.02713	0.0005	-0.0187	-0.0001
82	SLU 95	0.04003	-0.00024	-0.10049	0.0005	-0.1423	-0.0001
82	SLU 96	-0.00113	-0.00024	-0.0285	0.0005	-0.0203	-0.0001
82	SLU 97	0.04037	-0.00024	-0.10186	0.0005	-0.1439	-0.0001
82	SLU 98	-0.00113	-0.00023	-0.0285	0.0005	-0.0203	-0.0001
82	SLU 99	0.04037	-0.00024	-0.10186	0.0005	-0.1439	-0.0001
82	SLU 100	-0.00147	0.00002	-0.02713	0.0001	-0.0187	0
82	SLU 101	0.05386	0.00002	-0.12495	0.0001	-0.1835	0
82	SLU 102	0.05386	0.00003	-0.12495	0.0001	-0.1835	0

Nodo	Cont.	Spostamento			Rotazione		
Ind.	N.br.	ux	uy	uz	rx	ry	rz
82	SLU 103	-0.00147	0.00004	-0.02713	0.0001	-0.0187	0
82	SLU 104	0.04003	0.00004	-0.10049	0.0001	-0.1423	0
82	SLU 105	0.0542	0.00002	-0.12632	0.0001	-0.1852	0
82	SLU 106	0.0542	0.00003	-0.12632	0.0001	-0.1852	0
82	SLU 107	-0.00113	0.00005	-0.0285	0.0001	-0.0203	0
82	SLU 108	0.04037	0.00004	-0.10186	0.0001	-0.1439	0
82	SLU 109	-0.0008	0.00002	-0.02987	0.0001	-0.022	0
82	SLU 110	0.0407	0.00002	-0.10323	0.0001	-0.1456	0
82	SLU 111	-0.0008	0.00003	-0.02987	0.0001	-0.022	0
82	SLU 112	0.0407	0.00003	-0.10323	0.0001	-0.1456	0
82	SLU 113	0.05386	-0.00009	-0.12495	0.0003	-0.1835	-0.0001
82	SLU 114	0.05386	-0.00008	-0.12495	0.0002	-0.1835	0
82	SLU 115	-0.00147	-0.00006	-0.02713	0.0002	-0.0187	0
82	SLU 116	0.04003	-0.00006	-0.10049	0.0002	-0.1423	0
82	SLU 117	0.0542	-0.00009	-0.12632	0.0003	-0.1852	-0.0001
82	SLU 118	0.0542	-0.00008	-0.12632	0.0002	-0.1852	0
82	SLU 119	-0.00113	-0.00006	-0.0285	0.0002	-0.0203	0
82	SLU 120	0.04037	-0.00006	-0.10186	0.0002	-0.1439	0
82	SLU 121	-0.0008	-0.00008	-0.02987	0.0003	-0.022	-0.0001
82	SLU 122	0.0407	-0.00008	-0.10323	0.0003	-0.1456	-0.0001
82	SLU 123	-0.0008	-0.00007	-0.02987	0.0002	-0.022	0
82	SLU 124	0.0407	-0.00008	-0.10323	0.0002	-0.1456	0
82	SLU 125	-0.00147	-0.00024	-0.02713	0.0005	-0.0187	-0.0001
82	SLU 126	0.04003	-0.00024	-0.10049	0.0005	-0.1423	-0.0001
82	SLU 127	-0.00147	-0.00023	-0.02713	0.0005	-0.0187	-0.0001
82	SLU 128	0.04003	-0.00024	-0.10049	0.0005	-0.1423	-0.0001
82	SLU 129	-0.00113	-0.00024	-0.0285	0.0005	-0.0203	-0.0001
82	SLU 130	0.04037	-0.00024	-0.10186	0.0005	-0.1439	-0.0001
82	SLU 131	-0.00113	-0.00023	-0.0285	0.0005	-0.0203	-0.0001
82	SLU 132	0.04037	-0.00024	-0.10186	0.0005	-0.1439	-0.0001
82	SLE RA 1	-0.00113	0.00002	-0.02087	0.0001	-0.0144	0
82	SLE RA 2	0.03576	0.00002	-0.08608	0.0001	-0.1243	0
82	SLE RA 3	0.03576	0.00002	-0.08608	0.0001	-0.1243	0
82	SLE RA 4	-0.00113	0.00003	-0.02087	0	-0.0144	0
82	SLE RA 5	0.02654	0.00003	-0.06978	0	-0.0968	0
82	SLE RA 6	0.03598	0.00002	-0.08699	0.0001	-0.1254	0
82	SLE RA 7	0.03598	0.00002	-0.08699	0.0001	-0.1254	0
82	SLE RA 8	-0.00091	0.00003	-0.02178	0	-0.0155	0
82	SLE RA 9	0.02676	0.00003	-0.07069	0	-0.0979	0
82	SLE RA 10	-0.00068	0.00002	-0.0227	0.0001	-0.0166	0
82	SLE RA 11	0.02698	0.00002	-0.0716	0.0001	-0.099	0
82	SLE RA 12	-0.00068	0.00002	-0.0227	0.0001	-0.0166	0
82	SLE RA 13	0.02698	0.00002	-0.0716	0.0001	-0.099	0
82	SLE RA 14	0.03576	-0.00006	-0.08608	0.0002	-0.1243	0
82	SLE RA 15	0.03576	-0.00005	-0.08608	0.0002	-0.1243	0
82	SLE RA 16	-0.00113	-0.00004	-0.02087	0.0002	-0.0144	0
82	SLE RA 17	0.02654	-0.00004	-0.06978	0.0002	-0.0968	0
82	SLE RA 18	0.03598	-0.00005	-0.08699	0.0002	-0.1254	0
82	SLE RA 19	0.03598	-0.00005	-0.08699	0.0002	-0.1254	0
82	SLE RA 20	-0.00091	-0.00004	-0.02178	0.0002	-0.0155	0
82	SLE RA 21	0.02676	-0.00004	-0.07069	0.0002	-0.0979	0
82	SLE RA 22	-0.00068	-0.00005	-0.0227	0.0002	-0.0166	0
82	SLE RA 23	0.02698	-0.00005	-0.0716	0.0002	-0.099	0
82	SLE RA 24	-0.00068	-0.00005	-0.0227	0.0002	-0.0166	0
82	SLE RA 25	0.02698	-0.00005	-0.0716	0.0002	-0.099	0
82	SLE RA 26	-0.00113	-0.00016	-0.02087	0.0003	-0.0144	-0.0001
82	SLE RA 27	0.02654	-0.00016	-0.06978	0.0003	-0.0968	-0.0001
82	SLE RA 28	-0.00113	-0.00015	-0.02087	0.0003	-0.0144	-0.0001
82	SLE RA 29	0.02654	-0.00015	-0.06978	0.0003	-0.0968	-0.0001
82	SLE RA 30	-0.00091	-0.00016	-0.02178	0.0003	-0.0155	-0.0001
82	SLE RA 31	0.02676	-0.00016	-0.07069	0.0003	-0.0979	-0.0001
82	SLE RA 32	-0.00091	-0.00015	-0.02178	0.0003	-0.0155	-0.0001
82	SLE RA 33	0.02676	-0.00015	-0.07069	0.0003	-0.0979	-0.0001
82	SLE FR 1	-0.00113	0.00002	-0.02087	0.0001	-0.0144	0
82	SLE FR 2	0.02654	0.00002	-0.06978	0.0001	-0.0968	0
82	SLE FR 3	-0.00113	0.00002	-0.02087	0.0001	-0.0144	0
82	SLE FR 4	-0.00104	0.00002	-0.02124	0.0001	-0.0148	0
82	SLE FR 5	-0.00113	-0.00005	-0.02087	0.0002	-0.0144	0
82	SLE QP 1	-0.00113	0.00002	-0.02087	0.0001	-0.0144	0
82	SLO 1	-0.01241	-0.15987	-0.02685	0.0774	-0.0146	0.0955
82	SLO 2	-0.01241	-0.15987	-0.02685	0.0774	-0.0146	0.0955
82	SLO 3	-0.01241	0.1599	-0.02685	-0.0773	-0.0146	-0.0956
82	SLO 4	-0.01241	0.1599	-0.02685	-0.0773	-0.0146	-0.0956
82	SLO 5	-0.00451	-0.53294	-0.02267	0.2579	-0.0144	0.3185
82	SLO 6	-0.00451	-0.53294	-0.02267	0.2579	-0.0144	0.3185
82	SLO 7	-0.00451	0.53297	-0.02267	-0.2577	-0.0144	-0.3185
82	SLO 8	-0.00451	0.53297	-0.02267	-0.2577	-0.0144	-0.3185
82	SLO 9	0.00225	-0.53294	-0.01908	0.2579	-0.0143	0.3185
82	SLO 10	0.00225	-0.53294	-0.01908	0.2579	-0.0143	0.3185
82	SLO 11	0.00225	0.53297	-0.01908	-0.2577	-0.0143	-0.3185
82	SLO 12	0.00225	0.53297	-0.01908	-0.2577	-0.0143	-0.3185
82	SLO 13	0.01015	-0.15987	-0.01489	0.0774	-0.0142	0.0955
82	SLO 14	0.01015	-0.15987	-0.01489	0.0774	-0.0142	0.0955
82	SLO 15	0.01015	0.1599	-0.01489	-0.0773	-0.0142	-0.0956
82	SLO 16	0.01015	0.1599	-0.01489	-0.0773	-0.0142	-0.0956
82	SLD 1	-0.01041	-0.14772	-0.02579	0.0715	-0.0145	0.0883
82	SLD 2	-0.01041	-0.14772	-0.02579	0.0715	-0.0145	0.0883
82	SLD 3	-0.01041	0.14775	-0.02579	-0.0714	-0.0145	-0.0883
82	SLD 4	-0.01041	0.14775	-0.02579	-0.0714	-0.0145	-0.0883
82	SLD 5	-0.00391	-0.49243	-0.02235	0.2383	-0.0144	0.2943
82	SLD 6	-0.00391	-0.49243	-0.02235	0.2383	-0.0144	0.2943
82	SLD 7	-0.00391	0.49246	-0.02235	-0.2381	-0.0144	-0.2943
82	SLD 8	-0.00391	0.49246	-0.02235	-0.2381	-0.0144	-0.2943
82	SLD 9	0.00165	-0.49243	-0.0194	0.2383	-0.0143	0.2943
82	SLD 10	0.00165	-0.49243	-0.0194	0.2383	-0.0143	0.2943

Nodo	Cont.	Spostamento			Rotazione		
Ind.	N.br.	ux	uy	uz	rx	ry	rz
82	SLD 11	0.00165	0.49246	-0.0194	-0.2381	-0.0143	-0.2943
82	SLD 12	0.00165	0.49246	-0.0194	-0.2381	-0.0143	-0.2943
82	SLD 13	0.00815	-0.14772	-0.01595	0.0715	-0.0142	0.0883
82	SLD 14	0.00815	-0.14772	-0.01595	0.0715	-0.0142	0.0883
82	SLD 15	0.00815	0.14775	-0.01595	-0.0714	-0.0142	-0.0883
82	SLD 16	0.00815	0.14775	-0.01595	-0.0714	-0.0142	-0.0883
82	SLV 1	-0.02112	-0.38963	-0.03147	0.1885	-0.0148	0.2328
82	SLV 2	-0.02112	-0.38963	-0.03147	0.1885	-0.0148	0.2328
82	SLV 3	-0.02112	0.38966	-0.03147	-0.1884	-0.0148	-0.2329
82	SLV 4	-0.02112	0.38966	-0.03147	-0.1884	-0.0148	-0.2329
82	SLV 5	-0.00713	-1.29881	-0.02405	0.6283	-0.0145	0.7761
82	SLV 6	-0.00713	-1.29881	-0.02405	0.6283	-0.0145	0.7761
82	SLV 7	-0.00713	1.29884	-0.02405	-0.6282	-0.0145	-0.7762
82	SLV 8	-0.00713	1.29884	-0.02405	-0.6282	-0.0145	-0.7762
82	SLV 9	0.00487	-1.29881	-0.01769	0.6283	-0.0143	0.7761
82	SLV 10	0.00487	-1.29881	-0.01769	0.6283	-0.0143	0.7761
82	SLV 11	0.00487	1.29884	-0.01769	-0.6282	-0.0143	-0.7762
82	SLV 12	0.00487	1.29884	-0.01769	-0.6282	-0.0143	-0.7762
82	SLV 13	0.01886	-0.38963	-0.01028	0.1885	-0.014	0.2328
82	SLV 14	0.01886	-0.38963	-0.01028	0.1885	-0.014	0.2328
82	SLV 15	0.01886	0.38966	-0.01028	-0.1884	-0.014	-0.2329
82	SLV 16	0.01886	0.38966	-0.01028	-0.1884	-0.014	-0.2329
83	SLU 1	0.00113	0.00003	-0.02076	0.0002	0.0143	0.0001
83	SLU 2	-0.02654	0.00003	-0.06966	0.0002	0.0967	0.0001
83	SLU 3	-0.02669	0.00004	-0.06989	0.0002	0.0971	0
83	SLU 4	0.00074	0.00006	-0.02135	0.0002	0.0154	0
83	SLU 5	-0.02001	0.00005	-0.05802	0.0002	0.0772	0
83	SLU 6	-0.02687	0.00003	-0.07103	0.0002	0.0984	0.0001
83	SLU 7	-0.02703	0.00004	-0.07127	0.0002	0.0988	0.0001
83	SLU 8	0.00041	0.00006	-0.02272	0.0002	0.017	0
83	SLU 9	-0.02034	0.00006	-0.05939	0.0002	0.0788	0
83	SLU 10	0.00046	0.00004	-0.0235	0.0002	0.0176	0.0001
83	SLU 11	-0.02029	0.00003	-0.06018	0.0002	0.0794	0.0001
83	SLU 12	0.00031	0.00004	-0.02374	0.0002	0.018	0.0001
83	SLU 13	-0.02044	0.00004	-0.06041	0.0002	0.0798	0.0001
83	SLU 14	-0.0266	-0.00007	-0.07047	0.0004	0.0975	0.0001
83	SLU 15	-0.02675	-0.00007	-0.07071	0.0004	0.0979	0.0001
83	SLU 16	0.00068	-0.00005	-0.02216	0.0004	0.0161	0.0001
83	SLU 17	-0.02007	-0.00005	-0.05884	0.0004	0.0779	0.0001
83	SLU 18	-0.02693	-0.00007	-0.07185	0.0004	0.0991	0.0001
83	SLU 19	-0.02709	-0.00006	-0.07208	0.0004	0.0995	0.0001
83	SLU 20	0.00035	-0.00005	-0.02353	0.0004	0.0178	0.0001
83	SLU 21	-0.0204	-0.00005	-0.06021	0.0004	0.0796	0.0001
83	SLU 22	0.0004	-0.00007	-0.02432	0.0004	0.0183	0.0001
83	SLU 23	-0.02035	-0.00007	-0.06099	0.0004	0.0801	0.0001
83	SLU 24	0.00025	-0.00006	-0.02455	0.0004	0.0188	0.0001
83	SLU 25	-0.0205	-0.00006	-0.06123	0.0004	0.0806	0.0001
83	SLU 26	0.00098	-0.00023	-0.0228	0.0007	0.0162	0.0002
83	SLU 27	-0.01977	-0.00023	-0.05947	0.0006	0.078	0.0002
83	SLU 28	0.00082	-0.00022	-0.02303	0.0006	0.0166	0.0002
83	SLU 29	-0.01993	-0.00022	-0.05971	0.0006	0.0784	0.0002
83	SLU 30	0.00064	-0.00023	-0.02417	0.0007	0.0178	0.0002
83	SLU 31	-0.02011	-0.00023	-0.06084	0.0007	0.0797	0.0002
83	SLU 32	0.00049	-0.00022	-0.0244	0.0007	0.0183	0.0002
83	SLU 33	-0.02026	-0.00022	-0.06108	0.0006	0.0801	0.0002
83	SLU 34	0.00113	0.00003	-0.02076	0.0002	0.0143	0.0001
83	SLU 35	-0.02654	0.00003	-0.06966	0.0002	0.0967	0.0001
83	SLU 36	-0.02669	0.00004	-0.06989	0.0002	0.0971	0
83	SLU 37	0.00074	0.00006	-0.02135	0.0002	0.0154	0
83	SLU 38	-0.02001	0.00005	-0.05802	0.0002	0.0772	0
83	SLU 39	-0.02687	0.00003	-0.07103	0.0002	0.0984	0.0001
83	SLU 40	-0.02703	0.00004	-0.07127	0.0002	0.0988	0.0001
83	SLU 41	0.00041	0.00006	-0.02272	0.0002	0.017	0
83	SLU 42	-0.02034	0.00006	-0.05939	0.0002	0.0788	0
83	SLU 43	0.00046	0.00004	-0.0235	0.0002	0.0176	0.0001
83	SLU 44	-0.02029	0.00003	-0.06018	0.0002	0.0794	0.0001
83	SLU 45	0.00031	0.00004	-0.02374	0.0002	0.018	0.0001
83	SLU 46	-0.02044	0.00004	-0.06041	0.0002	0.0798	0.0001
83	SLU 47	-0.0266	-0.00007	-0.07047	0.0004	0.0975	0.0001
83	SLU 48	-0.02675	-0.00007	-0.07071	0.0004	0.0979	0.0001
83	SLU 49	0.00068	-0.00005	-0.02216	0.0004	0.0161	0.0001
83	SLU 50	-0.02007	-0.00005	-0.05884	0.0004	0.0779	0.0001
83	SLU 51	-0.02693	-0.00007	-0.07185	0.0004	0.0991	0.0001
83	SLU 52	-0.02709	-0.00006	-0.07208	0.0004	0.0995	0.0001
83	SLU 53	0.00035	-0.00005	-0.02353	0.0004	0.0178	0.0001
83	SLU 54	-0.0204	-0.00005	-0.06021	0.0004	0.0796	0.0001
83	SLU 55	0.0004	-0.00007	-0.02432	0.0004	0.0183	0.0001
83	SLU 56	-0.02035	-0.00007	-0.06099	0.0004	0.0801	0.0001
83	SLU 57	0.00025	-0.00006	-0.02455	0.0004	0.0188	0.0001
83	SLU 58	-0.0205	-0.00006	-0.06123	0.0004	0.0806	0.0001
83	SLU 59	0.00098	-0.00023	-0.0228	0.0007	0.0162	0.0002
83	SLU 60	-0.01977	-0.00023	-0.05947	0.0006	0.078	0.0002
83	SLU 61	0.00082	-0.00022	-0.02303	0.0006	0.0166	0.0002
83	SLU 62	-0.01993	-0.00022	-0.05971	0.0006	0.0784	0.0002
83	SLU 63	0.00064	-0.00023	-0.02417	0.0007	0.0178	0.0002
83	SLU 64	-0.02011	-0.00023	-0.06084	0.0007	0.0797	0.0002
83	SLU 65	0.00049	-0.00022	-0.0244	0.0007	0.0183	0.0002
83	SLU 66	-0.02026	-0.00022	-0.06108	0.0006	0.0801	0.0002
83	SLU 67	0.00146	0.00004	-0.02699	0.0003	0.0186	0.0001
83	SLU 68	-0.0262	0.00004	-0.07589	0.0003	0.101	0.0001
83	SLU 69	-0.02636	0.00005	-0.07612	0.0003	0.1014	0.0001
83	SLU 70	0.00108	0.00007	-0.02757	0.0003	0.0196	0.0001
83	SLU 71	-0.01967	0.00006	-0.06425	0.0003	0.0815	0.0001
83	SLU 72	-0.02654	0.00004	-0.07726	0.0003	0.1026	0.0001
83	SLU 73	-0.02669	0.00005	-0.07749	0.0003	0.1031	0.0001

Nodo	Cont.	Spostamento			Rotazione		
Ind.	N.br.	ux	uy	uz	rx	ry	rz
83	SLU 74	0.00075	0.00007	-0.02895	0.0003	0.0213	0.0001
83	SLU 75	-0.02	0.00007	-0.06562	0.0003	0.0831	0.0001
83	SLU 76	0.0008	0.00005	-0.02973	0.0003	0.0219	0.0001
83	SLU 77	-0.01995	0.00004	-0.06641	0.0003	0.0837	0.0001
83	SLU 78	0.00064	0.00005	-0.02997	0.0003	0.0223	0.0001
83	SLU 79	-0.02011	0.00005	-0.06664	0.0003	0.0841	0.0001
83	SLU 80	-0.02626	-0.00006	-0.0767	0.0005	0.1018	0.0001
83	SLU 81	-0.02642	-0.00006	-0.07694	0.0005	0.1022	0.0001
83	SLU 82	0.00102	-0.00004	-0.02839	0.0004	0.0204	0.0001
83	SLU 83	-0.01973	-0.00004	-0.06506	0.0004	0.0822	0.0001
83	SLU 84	-0.0266	-0.00006	-0.07807	0.0005	0.1034	0.0001
83	SLU 85	-0.02675	-0.00005	-0.07831	0.0005	0.1038	0.0001
83	SLU 86	0.00069	-0.00004	-0.02976	0.0005	0.022	0.0001
83	SLU 87	-0.02006	-0.00004	-0.06644	0.0004	0.0839	0.0001
83	SLU 88	0.00074	-0.00006	-0.03055	0.0005	0.0226	0.0001
83	SLU 89	-0.02001	-0.00006	-0.06722	0.0005	0.0844	0.0001
83	SLU 90	0.00058	-0.00005	-0.03078	0.0005	0.023	0.0001
83	SLU 91	-0.02016	-0.00005	-0.06746	0.0005	0.0849	0.0001
83	SLU 92	0.00131	-0.00022	-0.02902	0.0007	0.0205	0.0002
83	SLU 93	-0.01944	-0.00022	-0.0657	0.0007	0.0823	0.0002
83	SLU 94	0.00116	-0.00021	-0.02926	0.0007	0.0209	0.0002
83	SLU 95	-0.01959	-0.00021	-0.06593	0.0007	0.0827	0.0002
83	SLU 96	0.00098	-0.00022	-0.0304	0.0007	0.0221	0.0002
83	SLU 97	-0.01977	-0.00022	-0.06707	0.0007	0.0839	0.0002
83	SLU 98	0.00083	-0.00021	-0.03063	0.0007	0.0226	0.0002
83	SLU 99	-0.01992	-0.00021	-0.06731	0.0007	0.0844	0.0002
83	SLU 100	0.00146	0.00004	-0.02699	0.0003	0.0186	0.0001
83	SLU 101	-0.0262	0.00004	-0.07589	0.0003	0.101	0.0001
83	SLU 102	-0.02636	0.00005	-0.07612	0.0003	0.1014	0.0001
83	SLU 103	0.00108	0.00007	-0.02757	0.0003	0.0196	0.0001
83	SLU 104	-0.01967	0.00006	-0.06425	0.0003	0.0815	0.0001
83	SLU 105	-0.02654	0.00004	-0.07726	0.0003	0.1026	0.0001
83	SLU 106	-0.02669	0.00005	-0.07749	0.0003	0.1031	0.0001
83	SLU 107	0.00075	0.00007	-0.02895	0.0003	0.0213	0.0001
83	SLU 108	-0.02	0.00007	-0.06562	0.0003	0.0831	0.0001
83	SLU 109	0.0008	0.00005	-0.02973	0.0003	0.0219	0.0001
83	SLU 110	-0.01995	0.00004	-0.06641	0.0003	0.0837	0.0001
83	SLU 111	0.00064	0.00005	-0.02997	0.0003	0.0223	0.0001
83	SLU 112	-0.02011	0.00005	-0.06664	0.0003	0.0841	0.0001
83	SLU 113	-0.02626	-0.00006	-0.0767	0.0005	0.1018	0.0001
83	SLU 114	-0.02642	-0.00006	-0.07694	0.0005	0.1022	0.0001
83	SLU 115	0.00102	-0.00004	-0.02839	0.0004	0.0204	0.0001
83	SLU 116	-0.01973	-0.00004	-0.06506	0.0004	0.0822	0.0001
83	SLU 117	-0.0266	-0.00006	-0.07807	0.0005	0.1034	0.0001
83	SLU 118	-0.02675	-0.00005	-0.07831	0.0005	0.1038	0.0001
83	SLU 119	0.00069	-0.00004	-0.02976	0.0005	0.022	0.0001
83	SLU 120	-0.02006	-0.00004	-0.06644	0.0004	0.0839	0.0001
83	SLU 121	0.00074	-0.00006	-0.03055	0.0005	0.0226	0.0001
83	SLU 122	-0.02001	-0.00006	-0.06722	0.0005	0.0844	0.0001
83	SLU 123	0.00058	-0.00005	-0.03078	0.0005	0.023	0.0001
83	SLU 124	-0.02016	-0.00005	-0.06746	0.0005	0.0849	0.0001
83	SLU 125	0.00131	-0.00022	-0.02902	0.0007	0.0205	0.0002
83	SLU 126	-0.01944	-0.00022	-0.0657	0.0007	0.0823	0.0002
83	SLU 127	0.00116	-0.00021	-0.02926	0.0007	0.0209	0.0002
83	SLU 128	-0.01959	-0.00021	-0.06593	0.0007	0.0827	0.0002
83	SLU 129	0.00098	-0.00022	-0.0304	0.0007	0.0221	0.0002
83	SLU 130	-0.01977	-0.00022	-0.06707	0.0007	0.0839	0.0002
83	SLU 131	0.00083	-0.00021	-0.03063	0.0007	0.0226	0.0002
83	SLU 132	-0.01992	-0.00021	-0.06731	0.0007	0.0844	0.0002
83	SLE RA 1	0.00113	0.00003	-0.02076	0.0002	0.0143	0.0001
83	SLE RA 2	-0.01732	0.00003	-0.05336	0.0002	0.0692	0.0001
83	SLE RA 3	-0.01742	0.00004	-0.05352	0.0002	0.0695	0.0001
83	SLE RA 4	0.00087	0.00005	-0.02115	0.0002	0.015	0
83	SLE RA 5	-0.01296	0.00005	-0.0456	0.0002	0.0562	0
83	SLE RA 6	-0.01754	0.00003	-0.05427	0.0002	0.0703	0.0001
83	SLE RA 7	-0.01764	0.00004	-0.05443	0.0002	0.0706	0.0001
83	SLE RA 8	0.00065	0.00005	-0.02207	0.0002	0.0161	0.0001
83	SLE RA 9	-0.01318	0.00005	-0.04652	0.0002	0.0573	0
83	SLE RA 10	0.00068	0.00003	-0.02259	0.0002	0.0165	0.0001
83	SLE RA 11	-0.01315	0.00003	-0.04704	0.0002	0.0577	0.0001
83	SLE RA 12	0.00058	0.00004	-0.02275	0.0002	0.0168	0.0001
83	SLE RA 13	-0.01325	0.00004	-0.0472	0.0002	0.058	0.0001
83	SLE RA 14	-0.01736	-0.00004	-0.0539	0.0003	0.0697	0.0001
83	SLE RA 15	-0.01746	-0.00003	-0.05406	0.0003	0.07	0.0001
83	SLE RA 16	0.00083	-0.00002	-0.02169	0.0003	0.0155	0.0001
83	SLE RA 17	-0.013	-0.00002	-0.04614	0.0003	0.0567	0.0001
83	SLE RA 18	-0.01758	-0.00004	-0.05482	0.0003	0.0708	0.0001
83	SLE RA 19	-0.01768	-0.00003	-0.05497	0.0003	0.0711	0.0001
83	SLE RA 20	0.00061	-0.00002	-0.02261	0.0003	0.0166	0.0001
83	SLE RA 21	-0.01322	-0.00002	-0.04706	0.0003	0.0578	0.0001
83	SLE RA 22	0.00064	-0.00003	-0.02313	0.0004	0.017	0.0001
83	SLE RA 23	-0.01319	-0.00004	-0.04758	0.0004	0.0582	0.0001
83	SLE RA 24	0.00054	-0.00003	-0.02329	0.0003	0.0173	0.0001
83	SLE RA 25	-0.01329	-0.00003	-0.04774	0.0003	0.0585	0.0001
83	SLE RA 26	0.00103	-0.00014	-0.02212	0.0005	0.0156	0.0001
83	SLE RA 27	-0.01281	-0.00014	-0.04657	0.0005	0.0568	0.0001
83	SLE RA 28	0.00092	-0.00013	-0.02227	0.0005	0.0159	0.0001
83	SLE RA 29	-0.01291	-0.00014	-0.04672	0.0005	0.0571	0.0001
83	SLE RA 30	0.0008	-0.00014	-0.02303	0.0005	0.0167	0.0001
83	SLE RA 31	-0.01303	-0.00014	-0.04748	0.0005	0.0579	0.0001
83	SLE RA 32	0.0007	-0.00013	-0.02319	0.0005	0.0169	0.0001
83	SLE RA 33	-0.01313	-0.00014	-0.04764	0.0005	0.0582	0.0001
83	SLE FR 1	0.00113	0.00003	-0.02076	0.0002	0.0143	0.0001
83	SLE FR 2	-0.01271	0.00003	-0.04521	0.0002	0.0555	0.0001
83	SLE FR 3	0.00102	0.00004	-0.02092	0.0002	0.0146	0.0001

Nodo	Cont.	Spostamento			Rotazione		
Ind.	N.br.	ux	uy	uz	rx	ry	rz
83	SLE FR 4	0.00104	0.00003	-0.02113	0.0002	0.0147	0.0001
83	SLE FR 5	0.00109	-0.00004	-0.0213	0.0003	0.0148	0.0001
83	SLE QP 1	0.00113	0.00003	-0.02076	0.0002	0.0143	0.0001
83	SLO 1	-0.01011	-0.15986	-0.01481	0.0776	0.0141	-0.0955
83	SLO 2	-0.01011	-0.15986	-0.01481	0.0776	0.0141	-0.0955
83	SLO 3	-0.01011	0.15992	-0.01481	-0.0772	0.0141	0.0956
83	SLO 4	-0.01011	0.15992	-0.01481	-0.0772	0.0141	0.0956
83	SLO 5	-0.00224	-0.53293	-0.01897	0.2582	0.0142	-0.3183
83	SLO 6	-0.00224	-0.53293	-0.01897	0.2582	0.0142	-0.3183
83	SLO 7	-0.00224	0.533	-0.01897	-0.2578	0.0142	0.3184
83	SLO 8	-0.00224	0.533	-0.01897	-0.2578	0.0142	0.3184
83	SLO 9	0.00449	-0.53293	-0.02255	0.2582	0.0144	-0.3183
83	SLO 10	0.00449	-0.53293	-0.02255	0.2582	0.0144	-0.3183
83	SLO 11	0.00449	0.533	-0.02255	-0.2578	0.0144	0.3184
83	SLO 12	0.00449	0.533	-0.02255	-0.2578	0.0144	0.3184
83	SLO 13	0.01236	-0.15986	-0.02671	0.0776	0.0145	-0.0955
83	SLO 14	0.01236	-0.15986	-0.02671	0.0776	0.0145	-0.0955
83	SLO 15	0.01236	0.15992	-0.02671	-0.0772	0.0145	0.0956
83	SLO 16	0.01236	0.15992	-0.02671	-0.0772	0.0145	0.0956
83	SLD 1	-0.00811	-0.1477	-0.01586	0.0717	0.0141	-0.0882
83	SLD 2	-0.00811	-0.1477	-0.01586	0.0717	0.0141	-0.0882
83	SLD 3	-0.00811	0.14777	-0.01586	-0.0713	0.0141	0.0883
83	SLD 4	-0.00811	0.14777	-0.01586	-0.0713	0.0141	0.0883
83	SLD 5	-0.00165	-0.49242	-0.01929	0.2386	0.0142	-0.2941
83	SLD 6	-0.00165	-0.49242	-0.01929	0.2386	0.0142	-0.2941
83	SLD 7	-0.00165	0.49248	-0.01929	-0.2382	0.0142	0.2942
83	SLD 8	-0.00165	0.49248	-0.01929	-0.2382	0.0142	0.2942
83	SLD 9	0.0039	-0.49242	-0.02223	0.2386	0.0143	-0.2941
83	SLD 10	0.0039	-0.49242	-0.02223	0.2386	0.0143	-0.2941
83	SLD 11	0.0039	0.49248	-0.02223	-0.2382	0.0143	0.2942
83	SLD 12	0.0039	0.49248	-0.02223	-0.2382	0.0143	0.2942
83	SLD 13	0.01036	-0.1477	-0.02565	0.0717	0.0145	-0.0882
83	SLD 14	0.01036	-0.1477	-0.02565	0.0717	0.0145	-0.0882
83	SLD 15	0.01036	0.14777	-0.02565	-0.0713	0.0145	0.0883
83	SLD 16	0.01036	0.14777	-0.02565	-0.0713	0.0145	0.0883
83	SLV 1	-0.01877	-0.38962	-0.01021	0.1888	0.0139	-0.2327
83	SLV 2	-0.01877	-0.38962	-0.01021	0.1888	0.0139	-0.2327
83	SLV 3	-0.01877	0.38969	-0.01021	-0.1884	0.0139	0.2328
83	SLV 4	-0.01877	0.38969	-0.01021	-0.1884	0.0139	0.2328
83	SLV 5	-0.00484	-1.29881	-0.0176	0.629	0.0142	-0.7758
83	SLV 6	-0.00484	-1.29881	-0.0176	0.629	0.0142	-0.7758
83	SLV 7	-0.00484	1.29888	-0.0176	-0.6285	0.0142	0.7759
83	SLV 8	-0.00484	1.29888	-0.0176	-0.6285	0.0142	0.7759
83	SLV 9	0.00709	-1.29881	-0.02392	0.629	0.0144	-0.7758
83	SLV 10	0.00709	-1.29881	-0.02392	0.629	0.0144	-0.7758
83	SLV 11	0.00709	1.29888	-0.02392	-0.6285	0.0144	0.7759
83	SLV 12	0.00709	1.29888	-0.02392	-0.6285	0.0144	0.7759
83	SLV 13	0.02102	-0.38962	-0.03131	0.1889	0.0147	-0.2327
83	SLV 14	0.02102	-0.38962	-0.03131	0.1889	0.0147	-0.2327
83	SLV 15	0.02102	0.38969	-0.03131	-0.1884	0.0147	0.2328
83	SLV 16	0.02102	0.38969	-0.03131	-0.1884	0.0147	0.2328
84	SLU 1	-0.00113	0.00003	-0.02076	0.0002	-0.0143	-0.0001
84	SLU 2	0.02654	0.00003	-0.06966	0.0002	-0.0967	-0.0001
84	SLU 3	0.02669	0.00004	-0.06989	0.0002	-0.0971	0
84	SLU 4	-0.00074	0.00006	-0.02135	0.0002	-0.0154	0
84	SLU 5	0.02001	0.00005	-0.05802	0.0002	-0.0772	0
84	SLU 6	0.02688	0.00003	-0.07102	0.0002	-0.0983	-0.0001
84	SLU 7	0.02703	0.00004	-0.07126	0.0002	-0.0988	-0.0001
84	SLU 8	-0.0004	0.00006	-0.02271	0.0002	-0.017	0
84	SLU 9	0.02035	0.00006	-0.05939	0.0002	-0.0788	0
84	SLU 10	-0.00045	0.00004	-0.02349	0.0002	-0.0175	-0.0001
84	SLU 11	0.0203	0.00003	-0.06017	0.0002	-0.0794	-0.0001
84	SLU 12	-0.0003	0.00004	-0.02373	0.0002	-0.018	-0.0001
84	SLU 13	0.02045	0.00004	-0.0604	0.0002	-0.0798	-0.0001
84	SLU 14	0.02661	-0.00007	-0.07046	0.0004	-0.0975	-0.0001
84	SLU 15	0.02676	-0.00007	-0.0707	0.0004	-0.0979	-0.0001
84	SLU 16	-0.00067	-0.00005	-0.02215	0.0004	-0.0161	-0.0001
84	SLU 17	0.02008	-0.00005	-0.05883	0.0004	-0.0779	-0.0001
84	SLU 18	0.02695	-0.00007	-0.07183	0.0004	-0.0991	-0.0001
84	SLU 19	0.0271	-0.00006	-0.07206	0.0004	-0.0995	-0.0001
84	SLU 20	-0.00034	-0.00005	-0.02352	0.0004	-0.0177	-0.0001
84	SLU 21	0.02041	-0.00005	-0.06019	0.0004	-0.0796	-0.0001
84	SLU 22	-0.00038	-0.00007	-0.02429	0.0004	-0.0183	-0.0001
84	SLU 23	0.02037	-0.00007	-0.06097	0.0004	-0.0801	-0.0001
84	SLU 24	-0.00023	-0.00006	-0.02453	0.0004	-0.0187	-0.0001
84	SLU 25	0.02052	-0.00006	-0.0612	0.0004	-0.0805	-0.0001
84	SLU 26	-0.00095	-0.00023	-0.02277	0.0007	-0.0162	-0.0002
84	SLU 27	0.0198	-0.00023	-0.05944	0.0006	-0.078	-0.0002
84	SLU 28	-0.0008	-0.00022	-0.023	0.0006	-0.0166	-0.0002
84	SLU 29	0.01995	-0.00022	-0.05968	0.0006	-0.0784	-0.0002
84	SLU 30	-0.00062	-0.00023	-0.02413	0.0007	-0.0178	-0.0002
84	SLU 31	0.02013	-0.00023	-0.06081	0.0007	-0.0796	-0.0002
84	SLU 32	-0.00046	-0.00022	-0.02437	0.0007	-0.0182	-0.0002
84	SLU 33	0.02029	-0.00022	-0.06104	0.0006	-0.08	-0.0002
84	SLU 34	-0.00113	0.00003	-0.02076	0.0002	-0.0143	-0.0001
84	SLU 35	0.02654	0.00003	-0.06966	0.0002	-0.0967	-0.0001
84	SLU 36	0.02669	0.00004	-0.06989	0.0002	-0.0971	0
84	SLU 37	-0.00074	0.00006	-0.02135	0.0002	-0.0154	0
84	SLU 38	0.02001	0.00005	-0.05802	0.0002	-0.0772	0
84	SLU 39	0.02688	0.00003	-0.07102	0.0002	-0.0983	-0.0001
84	SLU 40	0.02703	0.00004	-0.07126	0.0002	-0.0988	-0.0001
84	SLU 41	-0.0004	0.00006	-0.02271	0.0002	-0.017	0
84	SLU 42	0.02035	0.00006	-0.05939	0.0002	-0.0788	0
84	SLU 43	-0.00045	0.00004	-0.02349	0.0002	-0.0175	-0.0001
84	SLU 44	0.0203	0.00003	-0.06017	0.0002	-0.0794	-0.0001

Nodo	Cont.	Spostamento			Rotazione		
Ind.	N.br.	ux	uy	uz	rx	ry	rz
84	SLU 45	-0.0003	0.00004	-0.02373	0.0002	-0.018	-0.0001
84	SLU 46	0.02045	0.00004	-0.0604	0.0002	-0.0798	-0.0001
84	SLU 47	0.02661	-0.00007	-0.07046	0.0004	-0.0975	-0.0001
84	SLU 48	0.02676	-0.00007	-0.0707	0.0004	-0.0979	-0.0001
84	SLU 49	-0.00067	-0.00005	-0.02215	0.0004	-0.0161	-0.0001
84	SLU 50	0.02008	-0.00005	-0.05883	0.0004	-0.0779	-0.0001
84	SLU 51	0.02695	-0.00007	-0.07183	0.0004	-0.0991	-0.0001
84	SLU 52	0.0271	-0.00006	-0.07206	0.0004	-0.0995	-0.0001
84	SLU 53	-0.00034	-0.00005	-0.02352	0.0004	-0.0177	-0.0001
84	SLU 54	0.02041	-0.00005	-0.06019	0.0004	-0.0796	-0.0001
84	SLU 55	-0.00038	-0.00007	-0.02429	0.0004	-0.0183	-0.0001
84	SLU 56	0.02037	-0.00007	-0.06097	0.0004	-0.0801	-0.0001
84	SLU 57	-0.00023	-0.00006	-0.02453	0.0004	-0.0187	-0.0001
84	SLU 58	0.02052	-0.00006	-0.0612	0.0004	-0.0805	-0.0001
84	SLU 59	-0.00095	-0.00023	-0.02277	0.0007	-0.0162	-0.0002
84	SLU 60	0.0198	-0.00023	-0.05944	0.0006	-0.078	-0.0002
84	SLU 61	-0.0008	-0.00022	-0.023	0.0006	-0.0166	-0.0002
84	SLU 62	0.01995	-0.00022	-0.05968	0.0006	-0.0784	-0.0002
84	SLU 63	-0.00062	-0.00023	-0.02413	0.0007	-0.0178	-0.0002
84	SLU 64	0.02013	-0.00023	-0.06081	0.0007	-0.0796	-0.0002
84	SLU 65	-0.00046	-0.00022	-0.02437	0.0007	-0.0182	-0.0002
84	SLU 66	0.02029	-0.00022	-0.06104	0.0006	-0.08	-0.0002
84	SLU 67	-0.00146	0.00004	-0.02699	0.0003	-0.0186	-0.0001
84	SLU 68	0.0262	0.00004	-0.07589	0.0003	-0.101	-0.0001
84	SLU 69	0.02636	0.00005	-0.07612	0.0003	-0.1014	-0.0001
84	SLU 70	-0.00108	0.00007	-0.02757	0.0003	-0.0196	-0.0001
84	SLU 71	0.01967	0.00006	-0.06425	0.0003	-0.0815	-0.0001
84	SLU 72	0.02654	0.00004	-0.07725	0.0003	-0.1026	-0.0001
84	SLU 73	0.02669	0.00005	-0.07749	0.0003	-0.1031	-0.0001
84	SLU 74	-0.00074	0.00007	-0.02894	0.0003	-0.0213	-0.0001
84	SLU 75	0.02001	0.00007	-0.06562	0.0003	-0.0831	-0.0001
84	SLU 76	-0.00079	0.00005	-0.02972	0.0003	-0.0218	-0.0001
84	SLU 77	0.01996	0.00004	-0.06639	0.0003	-0.0837	-0.0001
84	SLU 78	-0.00063	0.00005	-0.02995	0.0003	-0.0223	-0.0001
84	SLU 79	0.02012	0.00005	-0.06663	0.0003	-0.0841	-0.0001
84	SLU 80	0.02627	-0.00006	-0.07669	0.0005	-0.1018	-0.0001
84	SLU 81	0.02642	-0.00006	-0.07693	0.0005	-0.1022	-0.0001
84	SLU 82	-0.00101	-0.00004	-0.02838	0.0004	-0.0204	-0.0001
84	SLU 83	0.01974	-0.00004	-0.06505	0.0004	-0.0822	-0.0001
84	SLU 84	0.02661	-0.00006	-0.07806	0.0005	-0.1034	-0.0001
84	SLU 85	0.02676	-0.00005	-0.07829	0.0005	-0.1038	-0.0001
84	SLU 86	-0.00067	-0.00004	-0.02974	0.0005	-0.022	-0.0001
84	SLU 87	0.02008	-0.00004	-0.06642	0.0004	-0.0838	-0.0001
84	SLU 88	-0.00072	-0.00006	-0.03052	0.0005	-0.0226	-0.0001
84	SLU 89	0.02003	-0.00006	-0.0672	0.0005	-0.0844	-0.0001
84	SLU 90	-0.00056	-0.00005	-0.03076	0.0005	-0.023	-0.0001
84	SLU 91	0.02018	-0.00005	-0.06743	0.0005	-0.0848	-0.0001
84	SLU 92	-0.00129	-0.00022	-0.029	0.0007	-0.0205	-0.0002
84	SLU 93	0.01946	-0.00022	-0.06567	0.0007	-0.0823	-0.0002
84	SLU 94	-0.00114	-0.00021	-0.02923	0.0007	-0.0209	-0.0002
84	SLU 95	0.01961	-0.00021	-0.06591	0.0007	-0.0827	-0.0002
84	SLU 96	-0.00095	-0.00022	-0.03036	0.0007	-0.0221	-0.0002
84	SLU 97	0.0198	-0.00022	-0.06704	0.0007	-0.0839	-0.0002
84	SLU 98	-0.0008	-0.00021	-0.0306	0.0007	-0.0225	-0.0002
84	SLU 99	0.01995	-0.00021	-0.06727	0.0007	-0.0843	-0.0002
84	SLU 100	-0.00146	0.00004	-0.02699	0.0003	-0.0186	-0.0001
84	SLU 101	0.0262	0.00004	-0.07589	0.0003	-0.101	-0.0001
84	SLU 102	0.02636	0.00005	-0.07612	0.0003	-0.1014	-0.0001
84	SLU 103	-0.00108	0.00007	-0.02757	0.0003	-0.0196	-0.0001
84	SLU 104	0.01967	0.00006	-0.06425	0.0003	-0.0815	-0.0001
84	SLU 105	0.02654	0.00004	-0.07725	0.0003	-0.1026	-0.0001
84	SLU 106	0.02669	0.00005	-0.07749	0.0003	-0.1031	-0.0001
84	SLU 107	-0.00074	0.00007	-0.02894	0.0003	-0.0213	-0.0001
84	SLU 108	0.02001	0.00007	-0.06562	0.0003	-0.0831	-0.0001
84	SLU 109	-0.00079	0.00005	-0.02972	0.0003	-0.0218	-0.0001
84	SLU 110	0.01996	0.00004	-0.06639	0.0003	-0.0837	-0.0001
84	SLU 111	-0.00063	0.00005	-0.02995	0.0003	-0.0223	-0.0001
84	SLU 112	0.02012	0.00005	-0.06663	0.0003	-0.0841	-0.0001
84	SLU 113	0.02627	-0.00006	-0.07669	0.0005	-0.1018	-0.0001
84	SLU 114	0.02642	-0.00006	-0.07693	0.0005	-0.1022	-0.0001
84	SLU 115	-0.00101	-0.00004	-0.02838	0.0004	-0.0204	-0.0001
84	SLU 116	0.01974	-0.00004	-0.06505	0.0004	-0.0822	-0.0001
84	SLU 117	0.02661	-0.00006	-0.07806	0.0005	-0.1034	-0.0001
84	SLU 118	0.02676	-0.00005	-0.07829	0.0005	-0.1038	-0.0001
84	SLU 119	-0.00067	-0.00004	-0.02974	0.0005	-0.022	-0.0001
84	SLU 120	0.02008	-0.00004	-0.06642	0.0004	-0.0838	-0.0001
84	SLU 121	-0.00072	-0.00006	-0.03052	0.0005	-0.0226	-0.0001
84	SLU 122	0.02003	-0.00006	-0.0672	0.0005	-0.0844	-0.0001
84	SLU 123	-0.00056	-0.00005	-0.03076	0.0005	-0.023	-0.0001
84	SLU 124	0.02018	-0.00005	-0.06743	0.0005	-0.0848	-0.0001
84	SLU 125	-0.00129	-0.00022	-0.029	0.0007	-0.0205	-0.0002
84	SLU 126	0.01946	-0.00022	-0.06567	0.0007	-0.0823	-0.0002
84	SLU 127	-0.00114	-0.00021	-0.02923	0.0007	-0.0209	-0.0002
84	SLU 128	0.01961	-0.00021	-0.06591	0.0007	-0.0827	-0.0002
84	SLU 129	-0.00095	-0.00022	-0.03036	0.0007	-0.0221	-0.0002
84	SLU 130	0.0198	-0.00022	-0.06704	0.0007	-0.0839	-0.0002
84	SLU 131	-0.0008	-0.00021	-0.0306	0.0007	-0.0225	-0.0002
84	SLU 132	0.01995	-0.00021	-0.06727	0.0007	-0.0843	-0.0002
84	SLE RA 1	-0.00113	0.00003	-0.02076	0.0002	-0.0143	-0.0001
84	SLE RA 2	0.01732	0.00003	-0.05336	0.0002	-0.0692	-0.0001
84	SLE RA 3	0.01742	0.00004	-0.05352	0.0002	-0.0695	-0.0001
84	SLE RA 4	-0.00087	0.00005	-0.02115	0.0002	-0.015	0
84	SLE RA 5	0.01296	0.00005	-0.0456	0.0002	-0.0562	0
84	SLE RA 6	0.01754	0.00003	-0.05427	0.0002	-0.0703	-0.0001
84	SLE RA 7	0.01765	0.00004	-0.05443	0.0002	-0.0706	-0.0001

Nodo	Cont.	Spostamento			Rotazione		
Ind.	N.br.	ux	uy	uz	rx	ry	rz
84	SLE RA 8	-0.00064	0.00005	-0.02206	0.0002	-0.0161	-0.0001
84	SLE RA 9	0.01319	0.00005	-0.04651	0.0002	-0.0573	0
84	SLE RA 10	-0.00067	0.00003	-0.02258	0.0002	-0.0165	-0.0001
84	SLE RA 11	0.01316	0.00003	-0.04703	0.0002	-0.0577	-0.0001
84	SLE RA 12	-0.00057	0.00004	-0.02274	0.0002	-0.0167	-0.0001
84	SLE RA 13	0.01326	0.00004	-0.04719	0.0002	-0.058	-0.0001
84	SLE RA 14	0.01736	-0.00004	-0.05389	0.0003	-0.0697	-0.0001
84	SLE RA 15	0.01747	-0.00003	-0.05405	0.0003	-0.07	-0.0001
84	SLE RA 16	-0.00082	-0.00002	-0.02169	0.0003	-0.0155	-0.0001
84	SLE RA 17	0.01301	-0.00002	-0.04614	0.0003	-0.0567	-0.0001
84	SLE RA 18	0.01759	-0.00004	-0.05481	0.0003	-0.0708	-0.0001
84	SLE RA 19	0.01769	-0.00003	-0.05496	0.0003	-0.0711	-0.0001
84	SLE RA 20	-0.0006	-0.00002	-0.0226	0.0003	-0.0166	-0.0001
84	SLE RA 21	0.01323	-0.00002	-0.04705	0.0003	-0.0578	-0.0001
84	SLE RA 22	-0.00063	-0.00004	-0.02312	0.0004	-0.017	-0.0001
84	SLE RA 23	0.0132	-0.00004	-0.04757	0.0004	-0.0582	-0.0001
84	SLE RA 24	-0.00053	-0.00003	-0.02327	0.0003	-0.0172	-0.0001
84	SLE RA 25	0.01331	-0.00003	-0.04772	0.0003	-0.0585	-0.0001
84	SLE RA 26	-0.00101	-0.00014	-0.0221	0.0005	-0.0155	-0.0001
84	SLE RA 27	0.01282	-0.00014	-0.04655	0.0005	-0.0568	-0.0001
84	SLE RA 28	-0.00091	-0.00013	-0.02226	0.0005	-0.0158	-0.0001
84	SLE RA 29	0.01292	-0.00014	-0.04671	0.0005	-0.057	-0.0001
84	SLE RA 30	-0.00079	-0.00014	-0.02301	0.0005	-0.0166	-0.0001
84	SLE RA 31	0.01305	-0.00014	-0.04746	0.0005	-0.0578	-0.0001
84	SLE RA 32	-0.00068	-0.00013	-0.02317	0.0005	-0.0169	-0.0001
84	SLE RA 33	0.01315	-0.00014	-0.04762	0.0005	-0.0581	-0.0001
84	SLE FR 1	-0.00113	0.00003	-0.02076	0.0002	-0.0143	-0.0001
84	SLE FR 2	0.01271	0.00003	-0.04521	0.0002	-0.0555	-0.0001
84	SLE FR 3	-0.00102	0.00004	-0.02092	0.0002	-0.0146	-0.0001
84	SLE FR 4	-0.00103	0.00003	-0.02112	0.0002	-0.0147	-0.0001
84	SLE FR 5	-0.00108	-0.00004	-0.02129	0.0003	-0.0148	-0.0001
84	SLE QP 1	-0.00113	0.00003	-0.02076	0.0002	-0.0143	-0.0001
84	SLO 1	-0.01236	-0.15986	-0.02671	0.0776	-0.0145	0.0955
84	SLO 2	-0.01236	-0.15986	-0.02671	0.0776	-0.0145	0.0955
84	SLO 3	-0.01236	0.15992	-0.02671	-0.0772	-0.0145	-0.0956
84	SLO 4	-0.01236	0.15992	-0.02671	-0.0772	-0.0145	-0.0956
84	SLO 5	-0.00449	-0.53293	-0.02255	0.2582	-0.0144	0.3183
84	SLO 6	-0.00449	-0.53293	-0.02255	0.2582	-0.0144	0.3183
84	SLO 7	-0.00449	0.533	-0.02255	-0.2578	-0.0144	-0.3184
84	SLO 8	-0.00449	0.533	-0.02255	-0.2578	-0.0144	-0.3184
84	SLO 9	0.00224	-0.53293	-0.01897	0.2582	-0.0142	0.3183
84	SLO 10	0.00224	-0.53293	-0.01897	0.2582	-0.0142	0.3183
84	SLO 11	0.00224	0.533	-0.01897	-0.2578	-0.0142	-0.3184
84	SLO 12	0.00224	0.533	-0.01897	-0.2578	-0.0142	-0.3184
84	SLO 13	0.01011	-0.15986	-0.01481	0.0776	-0.0141	0.0955
84	SLO 14	0.01011	-0.15986	-0.01481	0.0776	-0.0141	0.0955
84	SLO 15	0.01011	0.15992	-0.01481	-0.0772	-0.0141	-0.0956
84	SLO 16	0.01011	0.15992	-0.01481	-0.0772	-0.0141	-0.0956
84	SLD 1	-0.01036	-0.1477	-0.02565	0.0717	-0.0145	0.0882
84	SLD 2	-0.01036	-0.1477	-0.02565	0.0717	-0.0145	0.0882
84	SLD 3	-0.01036	0.14777	-0.02565	-0.0713	-0.0145	-0.0883
84	SLD 4	-0.01036	0.14777	-0.02565	-0.0713	-0.0145	-0.0883
84	SLD 5	-0.0039	-0.49242	-0.02223	0.2386	-0.0143	0.2941
84	SLD 6	-0.0039	-0.49242	-0.02223	0.2386	-0.0143	0.2941
84	SLD 7	-0.0039	0.49248	-0.02223	-0.2382	-0.0143	-0.2942
84	SLD 8	-0.0039	0.49248	-0.02223	-0.2382	-0.0143	-0.2942
84	SLD 9	0.00165	-0.49242	-0.01929	0.2386	-0.0142	0.2941
84	SLD 10	0.00165	-0.49242	-0.01929	0.2386	-0.0142	0.2941
84	SLD 11	0.00165	0.49248	-0.01929	-0.2382	-0.0142	-0.2942
84	SLD 12	0.00165	0.49248	-0.01929	-0.2382	-0.0142	-0.2942
84	SLD 13	0.00811	-0.1477	-0.01586	0.0717	-0.0141	0.0882
84	SLD 14	0.00811	-0.1477	-0.01586	0.0717	-0.0141	0.0882
84	SLD 15	0.00811	0.14777	-0.01586	-0.0713	-0.0141	-0.0883
84	SLD 16	0.00811	0.14777	-0.01586	-0.0713	-0.0141	-0.0883
84	SLV 1	-0.02102	-0.38962	-0.03131	0.1889	-0.0147	0.2327
84	SLV 2	-0.02102	-0.38962	-0.03131	0.1889	-0.0147	0.2327
84	SLV 3	-0.02102	0.38969	-0.03131	-0.1884	-0.0147	-0.2328
84	SLV 4	-0.02102	0.38969	-0.03131	-0.1884	-0.0147	-0.2328
84	SLV 5	-0.00709	-1.29881	-0.02392	0.629	-0.0144	0.7758
84	SLV 6	-0.00709	-1.29881	-0.02392	0.629	-0.0144	0.7758
84	SLV 7	-0.00709	1.29888	-0.02392	-0.6285	-0.0144	-0.7759
84	SLV 8	-0.00709	1.29888	-0.02392	-0.6285	-0.0144	-0.7759
84	SLV 9	0.00484	-1.29881	-0.0176	0.629	-0.0142	0.7758
84	SLV 10	0.00484	-1.29881	-0.0176	0.629	-0.0142	0.7758
84	SLV 11	0.00484	1.29888	-0.0176	-0.6285	-0.0142	-0.7759
84	SLV 12	0.00484	1.29888	-0.0176	-0.6285	-0.0142	-0.7759
84	SLV 13	0.01877	-0.38962	-0.01021	0.1888	-0.0139	0.2327
84	SLV 14	0.01877	-0.38962	-0.01021	0.1888	-0.0139	0.2327
84	SLV 15	0.01877	0.38969	-0.01021	-0.1884	-0.0139	-0.2328
84	SLV 16	0.01877	0.38969	-0.01021	-0.1884	-0.0139	-0.2328
85	SLU 1	-0.03613	0.00006	-0.01344	0.0009	0.0355	0.0003
85	SLU 2	-0.03614	0.00006	-0.01344	0.0009	0.0355	0.0003
85	SLU 3	-0.03916	0.00007	-0.01291	0.0009	0.0377	0.0003
85	SLU 4	-0.04368	0.00008	-0.01212	0.0009	0.041	0.0003
85	SLU 5	-0.04368	0.00008	-0.01212	0.0009	0.041	0.0003
85	SLU 6	-0.0408	0.00006	-0.01358	0.0009	0.0398	0.0003
85	SLU 7	-0.04382	0.00007	-0.01305	0.0009	0.042	0.0003
85	SLU 8	-0.04834	0.00009	-0.01226	0.0009	0.0453	0.0003
85	SLU 9	-0.04835	0.00008	-0.01226	0.0009	0.0453	0.0003
85	SLU 10	-0.04546	0.00006	-0.01372	0.001	0.044	0.0003
85	SLU 11	-0.04546	0.00006	-0.01372	0.001	0.044	0.0003
85	SLU 12	-0.04848	0.00007	-0.01319	0.001	0.0462	0.0003
85	SLU 13	-0.04848	0.00007	-0.01319	0.001	0.0462	0.0003
85	SLU 14	-0.03965	-0.00005	-0.01441	0.0011	0.0395	0.0003
85	SLU 15	-0.04266	-0.00004	-0.01389	0.0011	0.0417	0.0003

Nodo	Cont.	Spostamento			Rotazione		
Ind.	N.br.	ux	uy	uz	rx	ry	rz
85	SLU 16	-0.04719	-0.00002	-0.0131	0.0011	0.045	0.0003
85	SLU 17	-0.04719	-0.00002	-0.0131	0.0011	0.045	0.0003
85	SLU 18	-0.04431	-0.00005	-0.01455	0.0011	0.0437	0.0003
85	SLU 19	-0.04733	-0.00004	-0.01403	0.0011	0.0459	0.0003
85	SLU 20	-0.05185	-0.00002	-0.01324	0.0011	0.0492	0.0004
85	SLU 21	-0.05185	-0.00002	-0.01324	0.0011	0.0492	0.0003
85	SLU 22	-0.04897	-0.00004	-0.0147	0.0012	0.0479	0.0004
85	SLU 23	-0.04897	-0.00004	-0.0147	0.0012	0.0479	0.0004
85	SLU 24	-0.05198	-0.00003	-0.01417	0.0012	0.0501	0.0004
85	SLU 25	-0.05199	-0.00003	-0.01417	0.0012	0.0501	0.0004
85	SLU 26	-0.0449	-0.0002	-0.01588	0.0014	0.0454	0.0004
85	SLU 27	-0.04491	-0.0002	-0.01588	0.0014	0.0454	0.0004
85	SLU 28	-0.04792	-0.00019	-0.01536	0.0014	0.0476	0.0004
85	SLU 29	-0.04792	-0.00019	-0.01536	0.0014	0.0476	0.0004
85	SLU 30	-0.04956	-0.0002	-0.01602	0.0014	0.0496	0.0004
85	SLU 31	-0.04957	-0.0002	-0.01602	0.0014	0.0496	0.0004
85	SLU 32	-0.05258	-0.00019	-0.0155	0.0014	0.0518	0.0004
85	SLU 33	-0.05259	-0.00019	-0.0155	0.0014	0.0518	0.0004
85	SLU 34	-0.03613	0.00006	-0.01344	0.0009	0.0355	0.0003
85	SLU 35	-0.03614	0.00006	-0.01344	0.0009	0.0355	0.0003
85	SLU 36	-0.03916	0.00007	-0.01291	0.0009	0.0377	0.0003
85	SLU 37	-0.04368	0.00008	-0.01212	0.0009	0.041	0.0003
85	SLU 38	-0.04368	0.00008	-0.01212	0.0009	0.041	0.0003
85	SLU 39	-0.0408	0.00006	-0.01358	0.0009	0.0398	0.0003
85	SLU 40	-0.04382	0.00007	-0.01305	0.0009	0.042	0.0003
85	SLU 41	-0.04834	0.00009	-0.01226	0.0009	0.0453	0.0003
85	SLU 42	-0.04835	0.00008	-0.01226	0.0009	0.0453	0.0003
85	SLU 43	-0.04546	0.00006	-0.01372	0.001	0.044	0.0003
85	SLU 44	-0.04546	0.00006	-0.01372	0.001	0.044	0.0003
85	SLU 45	-0.04848	0.00007	-0.01319	0.001	0.0462	0.0003
85	SLU 46	-0.04848	0.00007	-0.01319	0.001	0.0462	0.0003
85	SLU 47	-0.03965	-0.00005	-0.01441	0.0011	0.0395	0.0003
85	SLU 48	-0.04266	-0.00004	-0.01389	0.0011	0.0417	0.0003
85	SLU 49	-0.04719	-0.00002	-0.0131	0.0011	0.045	0.0003
85	SLU 50	-0.04719	-0.00002	-0.0131	0.0011	0.045	0.0003
85	SLU 51	-0.04431	-0.00005	-0.01455	0.0011	0.0437	0.0003
85	SLU 52	-0.04733	-0.00004	-0.01403	0.0011	0.0459	0.0003
85	SLU 53	-0.05185	-0.00002	-0.01324	0.0011	0.0492	0.0004
85	SLU 54	-0.05185	-0.00002	-0.01324	0.0011	0.0492	0.0003
85	SLU 55	-0.04897	-0.00004	-0.0147	0.0012	0.0479	0.0004
85	SLU 56	-0.04897	-0.00004	-0.0147	0.0012	0.0479	0.0004
85	SLU 57	-0.05198	-0.00003	-0.01417	0.0012	0.0501	0.0004
85	SLU 58	-0.05199	-0.00003	-0.01417	0.0012	0.0501	0.0004
85	SLU 59	-0.0449	-0.0002	-0.01588	0.0014	0.0454	0.0004
85	SLU 60	-0.04491	-0.0002	-0.01588	0.0014	0.0454	0.0004
85	SLU 61	-0.04792	-0.00019	-0.01536	0.0014	0.0476	0.0004
85	SLU 62	-0.04792	-0.00019	-0.01536	0.0014	0.0476	0.0004
85	SLU 63	-0.04956	-0.0002	-0.01602	0.0014	0.0496	0.0004
85	SLU 64	-0.04957	-0.0002	-0.01602	0.0014	0.0496	0.0004
85	SLU 65	-0.05258	-0.00019	-0.0155	0.0014	0.0518	0.0004
85	SLU 66	-0.05259	-0.00019	-0.0155	0.0014	0.0518	0.0004
85	SLU 67	-0.04697	0.00008	-0.01747	0.0012	0.0462	0.0004
85	SLU 68	-0.04698	0.00007	-0.01747	0.0012	0.0462	0.0004
85	SLU 69	-0.05	0.00008	-0.01694	0.0012	0.0484	0.0004
85	SLU 70	-0.05452	0.0001	-0.01615	0.0012	0.0517	0.0004
85	SLU 71	-0.05452	0.0001	-0.01615	0.0012	0.0517	0.0004
85	SLU 72	-0.05164	0.00008	-0.01761	0.0012	0.0504	0.0004
85	SLU 73	-0.05466	0.00009	-0.01708	0.0012	0.0526	0.0004
85	SLU 74	-0.05918	0.0001	-0.01629	0.0012	0.0559	0.0004
85	SLU 75	-0.05919	0.0001	-0.01629	0.0012	0.0559	0.0004
85	SLU 76	-0.0563	0.00008	-0.01775	0.0012	0.0546	0.0004
85	SLU 77	-0.0563	0.00008	-0.01775	0.0012	0.0546	0.0004
85	SLU 78	-0.05932	0.00009	-0.01722	0.0012	0.0568	0.0004
85	SLU 79	-0.05932	0.00009	-0.01722	0.0012	0.0568	0.0004
85	SLU 80	-0.05049	-0.00003	-0.01845	0.0014	0.0501	0.0004
85	SLU 81	-0.0535	-0.00002	-0.01792	0.0014	0.0523	0.0004
85	SLU 82	-0.05803	0	-0.01713	0.0014	0.0556	0.0004
85	SLU 83	-0.05803	0	-0.01713	0.0014	0.0556	0.0004
85	SLU 84	-0.05515	-0.00003	-0.01859	0.0014	0.0544	0.0004
85	SLU 85	-0.05817	-0.00002	-0.01806	0.0014	0.0566	0.0004
85	SLU 86	-0.06269	0	-0.01727	0.0014	0.0599	0.0004
85	SLU 87	-0.06269	0	-0.01727	0.0014	0.0599	0.0004
85	SLU 88	-0.05981	-0.00002	-0.01873	0.0014	0.0586	0.0004
85	SLU 89	-0.05981	-0.00002	-0.01873	0.0014	0.0586	0.0004
85	SLU 90	-0.06282	-0.00001	-0.0182	0.0014	0.0608	0.0004
85	SLU 91	-0.06283	-0.00001	-0.0182	0.0014	0.0608	0.0004
85	SLU 92	-0.05574	-0.00018	-0.01992	0.0017	0.056	0.0005
85	SLU 93	-0.05575	-0.00018	-0.01991	0.0017	0.056	0.0005
85	SLU 94	-0.05876	-0.00017	-0.01939	0.0017	0.0582	0.0005
85	SLU 95	-0.05876	-0.00017	-0.01939	0.0017	0.0582	0.0005
85	SLU 96	-0.0604	-0.00018	-0.02006	0.0017	0.0603	0.0005
85	SLU 97	-0.06041	-0.00018	-0.02005	0.0017	0.0603	0.0005
85	SLU 98	-0.06342	-0.00017	-0.01953	0.0017	0.0625	0.0005
85	SLU 99	-0.06343	-0.00017	-0.01953	0.0017	0.0625	0.0005
85	SLU 100	-0.04697	0.00008	-0.01747	0.0012	0.0462	0.0004
85	SLU 101	-0.04698	0.00007	-0.01747	0.0012	0.0462	0.0004
85	SLU 102	-0.05	0.00008	-0.01694	0.0012	0.0484	0.0004
85	SLU 103	-0.05452	0.0001	-0.01615	0.0012	0.0517	0.0004
85	SLU 104	-0.05452	0.0001	-0.01615	0.0012	0.0517	0.0004
85	SLU 105	-0.05164	0.00008	-0.01761	0.0012	0.0504	0.0004
85	SLU 106	-0.05466	0.00009	-0.01708	0.0012	0.0526	0.0004
85	SLU 107	-0.05918	0.0001	-0.01629	0.0012	0.0559	0.0004
85	SLU 108	-0.05919	0.0001	-0.01629	0.0012	0.0559	0.0004
85	SLU 109	-0.0563	0.00008	-0.01775	0.0012	0.0546	0.0004
85	SLU 110	-0.0563	0.00008	-0.01775	0.0012	0.0546	0.0004

Nodo	Cont.	Spostamento			Rotazione		
Ind.	N.br.	ux	uy	uz	rx	ry	rz
85	SLU 111	-0.05932	0.00009	-0.01722	0.0012	0.0568	0.0004
85	SLU 112	-0.05932	0.00009	-0.01722	0.0012	0.0568	0.0004
85	SLU 113	-0.05049	-0.00003	-0.01845	0.0014	0.0501	0.0004
85	SLU 114	-0.0535	-0.00002	-0.01792	0.0014	0.0523	0.0004
85	SLU 115	-0.05803	0	-0.01713	0.0014	0.0556	0.0004
85	SLU 116	-0.05803	0	-0.01713	0.0014	0.0556	0.0004
85	SLU 117	-0.05515	-0.00003	-0.01859	0.0014	0.0544	0.0004
85	SLU 118	-0.05817	-0.00002	-0.01806	0.0014	0.0566	0.0004
85	SLU 119	-0.06269	0	-0.01727	0.0014	0.0599	0.0004
85	SLU 120	-0.06269	0	-0.01727	0.0014	0.0599	0.0004
85	SLU 121	-0.05981	-0.00002	-0.01873	0.0014	0.0586	0.0004
85	SLU 122	-0.05981	-0.00002	-0.01873	0.0014	0.0586	0.0004
85	SLU 123	-0.06282	-0.00001	-0.0182	0.0014	0.0608	0.0004
85	SLU 124	-0.06283	-0.00001	-0.0182	0.0014	0.0608	0.0004
85	SLU 125	-0.05574	-0.00018	-0.01992	0.0017	0.056	0.0005
85	SLU 126	-0.05575	-0.00018	-0.01991	0.0017	0.056	0.0005
85	SLU 127	-0.05876	-0.00017	-0.01939	0.0017	0.0582	0.0005
85	SLU 128	-0.05876	-0.00017	-0.01939	0.0017	0.0582	0.0005
85	SLU 129	-0.0604	-0.00018	-0.02006	0.0017	0.0603	0.0005
85	SLU 130	-0.06041	-0.00018	-0.02005	0.0017	0.0603	0.0005
85	SLU 131	-0.06342	-0.00017	-0.01953	0.0017	0.0625	0.0005
85	SLU 132	-0.06343	-0.00017	-0.01953	0.0017	0.0625	0.0005
85	SLE RA 1	-0.03613	0.00006	-0.01344	0.0009	0.0355	0.0003
85	SLE RA 2	-0.03614	0.00006	-0.01344	0.0009	0.0355	0.0003
85	SLE RA 3	-0.03815	0.00006	-0.01308	0.0009	0.037	0.0003
85	SLE RA 4	-0.04116	0.00008	-0.01256	0.0009	0.0392	0.0003
85	SLE RA 5	-0.04117	0.00007	-0.01256	0.0009	0.0392	0.0003
85	SLE RA 6	-0.03924	0.00006	-0.01353	0.0009	0.0383	0.0003
85	SLE RA 7	-0.04126	0.00006	-0.01318	0.0009	0.0398	0.0003
85	SLE RA 8	-0.04427	0.00008	-0.01265	0.0009	0.042	0.0003
85	SLE RA 9	-0.04427	0.00008	-0.01265	0.0009	0.042	0.0003
85	SLE RA 10	-0.04235	0.00006	-0.01362	0.001	0.0412	0.0003
85	SLE RA 11	-0.04235	0.00006	-0.01362	0.0009	0.0412	0.0003
85	SLE RA 12	-0.04436	0.00007	-0.01327	0.001	0.0426	0.0003
85	SLE RA 13	-0.04436	0.00007	-0.01327	0.0009	0.0426	0.0003
85	SLE RA 14	-0.03847	-0.00001	-0.01409	0.001	0.0381	0.0003
85	SLE RA 15	-0.04049	-0.00001	-0.01374	0.001	0.0396	0.0003
85	SLE RA 16	-0.0435	0.00001	-0.01321	0.001	0.0418	0.0003
85	SLE RA 17	-0.0435	0.00001	-0.01321	0.001	0.0418	0.0003
85	SLE RA 18	-0.04158	-0.00001	-0.01418	0.0011	0.041	0.0003
85	SLE RA 19	-0.0436	0	-0.01383	0.0011	0.0424	0.0003
85	SLE RA 20	-0.04661	0.00001	-0.0133	0.0011	0.0446	0.0003
85	SLE RA 21	-0.04661	0.00001	-0.0133	0.0011	0.0446	0.0003
85	SLE RA 22	-0.04469	-0.00001	-0.01428	0.0011	0.0438	0.0003
85	SLE RA 23	-0.04469	-0.00001	-0.01428	0.0011	0.0438	0.0003
85	SLE RA 24	-0.0467	0	-0.01393	0.0011	0.0453	0.0003
85	SLE RA 25	-0.0467	0	-0.01392	0.0011	0.0453	0.0003
85	SLE RA 26	-0.04198	-0.00011	-0.01507	0.0012	0.0421	0.0004
85	SLE RA 27	-0.04198	-0.00011	-0.01507	0.0012	0.0421	0.0004
85	SLE RA 28	-0.04399	-0.00011	-0.01472	0.0012	0.0436	0.0004
85	SLE RA 29	-0.04399	-0.00011	-0.01472	0.0012	0.0436	0.0004
85	SLE RA 30	-0.04509	-0.00011	-0.01516	0.0013	0.0449	0.0004
85	SLE RA 31	-0.04509	-0.00011	-0.01516	0.0012	0.0449	0.0004
85	SLE RA 32	-0.0471	-0.0001	-0.01481	0.0013	0.0464	0.0004
85	SLE RA 33	-0.0471	-0.00011	-0.01481	0.0012	0.0464	0.0004
85	SLE FR 1	-0.03613	0.00006	-0.01344	0.0009	0.0355	0.0003
85	SLE FR 2	-0.03614	0.00006	-0.01344	0.0009	0.0355	0.0003
85	SLE FR 3	-0.03814	0.00007	-0.01309	0.0009	0.037	0.0003
85	SLE FR 4	-0.03738	0.00006	-0.01348	0.0009	0.0366	0.0003
85	SLE FR 5	-0.03847	-0.00001	-0.01409	0.001	0.0381	0.0003
85	SLE QP 1	-0.03613	0.00006	-0.01344	0.0009	0.0355	0.0003
85	SLO 1	-0.16998	-0.15984	0.07009	0.0776	0.0052	-0.0957
85	SLO 2	-0.16998	-0.15984	0.07009	0.0776	0.0052	-0.0957
85	SLO 3	-0.16998	0.15996	0.07009	-0.0758	0.0052	0.0963
85	SLO 4	-0.16998	0.15996	0.07009	-0.0758	0.0052	0.0963
85	SLO 5	-0.07629	-0.53293	0.01162	0.2565	0.0264	-0.3196
85	SLO 6	-0.07629	-0.53293	0.01162	0.2565	0.0264	-0.3196
85	SLO 7	-0.07629	0.53305	0.01162	-0.2547	0.0264	0.3202
85	SLO 8	-0.07629	0.53305	0.01162	-0.2547	0.0264	0.3202
85	SLO 9	0.00402	-0.53293	-0.0385	0.2565	0.0446	-0.3196
85	SLO 10	0.00402	-0.53293	-0.0385	0.2565	0.0446	-0.3196
85	SLO 11	0.00402	0.53305	-0.0385	-0.2547	0.0446	0.3202
85	SLO 12	0.00402	0.53305	-0.0385	-0.2547	0.0446	0.3202
85	SLO 13	0.09771	-0.15984	-0.09696	0.0776	0.0658	-0.0957
85	SLO 14	0.09771	-0.15984	-0.09696	0.0776	0.0658	-0.0957
85	SLO 15	0.09771	0.15996	-0.09696	-0.0758	0.0658	0.0963
85	SLO 16	0.09771	0.15996	-0.09696	-0.0758	0.0658	0.0963
85	SLD 1	-0.14596	-0.14768	0.0551	0.0718	0.0107	-0.0884
85	SLD 2	-0.14596	-0.14768	0.0551	0.0718	0.0107	-0.0884
85	SLD 3	-0.14596	0.1478	0.0551	-0.0699	0.0107	0.089
85	SLD 4	-0.14596	0.1478	0.0551	-0.0699	0.0107	0.089
85	SLD 5	-0.06908	-0.49242	0.00712	0.2371	0.028	-0.2953
85	SLD 6	-0.06908	-0.49242	0.00712	0.2371	0.028	-0.2953
85	SLD 7	-0.06908	0.49254	0.00712	-0.2352	0.028	0.2959
85	SLD 8	-0.06908	0.49254	0.00712	-0.2352	0.028	0.2959
85	SLD 9	-0.00319	-0.49242	-0.034	0.2371	0.043	-0.2953
85	SLD 10	-0.00319	-0.49242	-0.034	0.2371	0.043	-0.2953
85	SLD 11	-0.00319	0.49254	-0.034	-0.2352	0.043	0.2959
85	SLD 12	-0.00319	0.49254	-0.034	-0.2352	0.043	0.2959
85	SLD 13	0.07369	-0.14768	-0.08197	0.0718	0.0603	-0.0884
85	SLD 14	0.07369	-0.14768	-0.08197	0.0718	0.0603	-0.0884
85	SLD 15	0.07369	0.1478	-0.08197	-0.0699	0.0603	0.089
85	SLD 16	0.07369	0.1478	-0.08197	-0.0699	0.0603	0.089
85	SLV 1	-0.28148	-0.38961	0.13967	0.1878	-0.02	-0.2336
85	SLV 2	-0.28148	-0.38961	0.13967	0.1878	-0.02	-0.2336

Nodo	Cont.	Spostamento			Rotazione		
Ind.	N.br.	ux	uy	uz	rx	ry	rz
85	SLV 3	-0.28148	0.38974	0.13967	-0.1859	-0.02	0.2342
85	SLV 4	-0.28148	0.38974	0.13967	-0.1859	-0.02	0.2342
85	SLV 5	-0.10974	-1.29886	0.0325	0.6237	0.0189	-0.7793
85	SLV 6	-0.10974	-1.29886	0.0325	0.6237	0.0189	-0.7793
85	SLV 7	-0.10974	1.29898	0.0325	-0.6219	0.0189	0.7799
85	SLV 8	-0.10974	1.29898	0.0325	-0.6219	0.0189	0.7799
85	SLV 9	0.03747	-1.29886	-0.05937	0.6237	0.0522	-0.7793
85	SLV 10	0.03747	-1.29886	-0.05937	0.6237	0.0522	-0.7793
85	SLV 11	0.03747	1.29898	-0.05937	-0.6219	0.0522	0.7799
85	SLV 12	0.03747	1.29898	-0.05937	-0.6219	0.0522	0.7799
85	SLV 13	0.20922	-0.38962	-0.16655	0.1878	0.091	-0.2336
85	SLV 14	0.20922	-0.38962	-0.16655	0.1878	0.091	-0.2336
85	SLV 15	0.20922	0.38973	-0.16655	-0.1859	0.091	0.2342
85	SLV 16	0.20922	0.38973	-0.16655	-0.1859	0.091	0.2342
86	SLU 1	0.03613	0.00006	-0.01344	0.0009	-0.0355	-0.0003
86	SLU 2	0.03614	0.00006	-0.01344	0.0009	-0.0355	-0.0003
86	SLU 3	0.03916	0.00007	-0.01291	0.0009	-0.0377	-0.0003
86	SLU 4	0.04368	0.00008	-0.01212	0.0009	-0.041	-0.0003
86	SLU 5	0.04368	0.00008	-0.01212	0.0009	-0.041	-0.0003
86	SLU 6	0.04127	0.00006	-0.01327	0.0009	-0.0396	-0.0003
86	SLU 7	0.04428	0.00007	-0.01274	0.0009	-0.0418	-0.0003
86	SLU 8	0.04881	0.00009	-0.01195	0.0009	-0.0451	-0.0003
86	SLU 9	0.04881	0.00008	-0.01195	0.0009	-0.0451	-0.0003
86	SLU 10	0.04639	0.00006	-0.0131	0.001	-0.0437	-0.0003
86	SLU 11	0.04639	0.00006	-0.0131	0.001	-0.0437	-0.0003
86	SLU 12	0.04941	0.00007	-0.01257	0.001	-0.0459	-0.0003
86	SLU 13	0.04941	0.00007	-0.01257	0.001	-0.0459	-0.0003
86	SLU 14	0.04042	-0.00005	-0.0139	0.0011	-0.0392	-0.0003
86	SLU 15	0.04344	-0.00004	-0.01337	0.0011	-0.0414	-0.0003
86	SLU 16	0.04796	-0.00002	-0.01258	0.0011	-0.0447	-0.0003
86	SLU 17	0.04797	-0.00002	-0.01258	0.0011	-0.0447	-0.0003
86	SLU 18	0.04555	-0.00005	-0.01373	0.0011	-0.0433	-0.0003
86	SLU 19	0.04857	-0.00004	-0.0132	0.0011	-0.0455	-0.0003
86	SLU 20	0.05309	-0.00002	-0.01241	0.0011	-0.0488	-0.0004
86	SLU 21	0.05309	-0.00002	-0.01241	0.0011	-0.0488	-0.0003
86	SLU 22	0.05067	-0.00004	-0.01356	0.0012	-0.0474	-0.0004
86	SLU 23	0.05068	-0.00004	-0.01356	0.0012	-0.0474	-0.0004
86	SLU 24	0.05369	-0.00003	-0.01303	0.0012	-0.0496	-0.0004
86	SLU 25	0.05369	-0.00003	-0.01303	0.0012	-0.0496	-0.0004
86	SLU 26	0.04684	-0.0002	-0.01459	0.0014	-0.0448	-0.0004
86	SLU 27	0.04684	-0.0002	-0.01459	0.0014	-0.0448	-0.0004
86	SLU 28	0.04986	-0.00019	-0.01407	0.0014	-0.047	-0.0004
86	SLU 29	0.04986	-0.00019	-0.01406	0.0014	-0.047	-0.0004
86	SLU 30	0.05197	-0.0002	-0.01442	0.0014	-0.0489	-0.0004
86	SLU 31	0.05197	-0.0002	-0.01442	0.0014	-0.0489	-0.0004
86	SLU 32	0.05499	-0.00019	-0.0139	0.0014	-0.0511	-0.0004
86	SLU 33	0.05499	-0.00019	-0.01389	0.0014	-0.0511	-0.0004
86	SLU 34	0.03613	0.00006	-0.01344	0.0009	-0.0355	-0.0003
86	SLU 35	0.03614	0.00006	-0.01344	0.0009	-0.0355	-0.0003
86	SLU 36	0.03916	0.00007	-0.01291	0.0009	-0.0377	-0.0003
86	SLU 37	0.04368	0.00008	-0.01212	0.0009	-0.041	-0.0003
86	SLU 38	0.04368	0.00008	-0.01212	0.0009	-0.041	-0.0003
86	SLU 39	0.04127	0.00006	-0.01327	0.0009	-0.0396	-0.0003
86	SLU 40	0.04428	0.00007	-0.01274	0.0009	-0.0418	-0.0003
86	SLU 41	0.04881	0.00009	-0.01195	0.0009	-0.0451	-0.0003
86	SLU 42	0.04881	0.00008	-0.01195	0.0009	-0.0451	-0.0003
86	SLU 43	0.04639	0.00006	-0.0131	0.001	-0.0437	-0.0003
86	SLU 44	0.04639	0.00006	-0.0131	0.001	-0.0437	-0.0003
86	SLU 45	0.04941	0.00007	-0.01257	0.001	-0.0459	-0.0003
86	SLU 46	0.04941	0.00007	-0.01257	0.001	-0.0459	-0.0003
86	SLU 47	0.04042	-0.00005	-0.0139	0.0011	-0.0392	-0.0003
86	SLU 48	0.04344	-0.00004	-0.01337	0.0011	-0.0414	-0.0003
86	SLU 49	0.04796	-0.00002	-0.01258	0.0011	-0.0447	-0.0003
86	SLU 50	0.04797	-0.00002	-0.01258	0.0011	-0.0447	-0.0003
86	SLU 51	0.04555	-0.00005	-0.01373	0.0011	-0.0433	-0.0003
86	SLU 52	0.04857	-0.00004	-0.0132	0.0011	-0.0455	-0.0003
86	SLU 53	0.05309	-0.00002	-0.01241	0.0011	-0.0488	-0.0004
86	SLU 54	0.05309	-0.00002	-0.01241	0.0011	-0.0488	-0.0003
86	SLU 55	0.05067	-0.00004	-0.01356	0.0012	-0.0474	-0.0004
86	SLU 56	0.05068	-0.00004	-0.01356	0.0012	-0.0474	-0.0004
86	SLU 57	0.05369	-0.00003	-0.01303	0.0012	-0.0496	-0.0004
86	SLU 58	0.05369	-0.00003	-0.01303	0.0012	-0.0496	-0.0004
86	SLU 59	0.04684	-0.0002	-0.01459	0.0014	-0.0448	-0.0004
86	SLU 60	0.04684	-0.0002	-0.01459	0.0014	-0.0448	-0.0004
86	SLU 61	0.04986	-0.00019	-0.01407	0.0014	-0.047	-0.0004
86	SLU 62	0.04986	-0.00019	-0.01406	0.0014	-0.047	-0.0004
86	SLU 63	0.05197	-0.0002	-0.01442	0.0014	-0.0489	-0.0004
86	SLU 64	0.05197	-0.0002	-0.01442	0.0014	-0.0489	-0.0004
86	SLU 65	0.05499	-0.00019	-0.0139	0.0014	-0.0511	-0.0004
86	SLU 66	0.05499	-0.00019	-0.01389	0.0014	-0.0511	-0.0004
86	SLU 67	0.04697	0.00008	-0.01747	0.0012	-0.0462	-0.0004
86	SLU 68	0.04698	0.00007	-0.01747	0.0012	-0.0462	-0.0004
86	SLU 69	0.05	0.00008	-0.01694	0.0012	-0.0484	-0.0004
86	SLU 70	0.05452	0.0001	-0.01615	0.0012	-0.0517	-0.0004
86	SLU 71	0.05452	0.0001	-0.01615	0.0012	-0.0517	-0.0004
86	SLU 72	0.05211	0.00008	-0.0173	0.0012	-0.0503	-0.0004
86	SLU 73	0.05512	0.00009	-0.01677	0.0012	-0.0525	-0.0004
86	SLU 74	0.05965	0.0001	-0.01598	0.0012	-0.0558	-0.0004
86	SLU 75	0.05965	0.0001	-0.01598	0.0012	-0.0558	-0.0004
86	SLU 76	0.05723	0.00008	-0.01713	0.0012	-0.0544	-0.0004
86	SLU 77	0.05723	0.00008	-0.01713	0.0012	-0.0544	-0.0004
86	SLU 78	0.06025	0.00009	-0.0166	0.0012	-0.0566	-0.0004
86	SLU 79	0.06025	0.00009	-0.0166	0.0012	-0.0566	-0.0004
86	SLU 80	0.05126	-0.00003	-0.01793	0.0014	-0.0499	-0.0004
86	SLU 81	0.05428	-0.00002	-0.0174	0.0014	-0.0521	-0.0004

Nodo	Cont.	Spostamento			Rotazione		
Ind.	N.br.	ux	uy	uz	rx	ry	rz
86	SLU 82	0.0588	0	-0.01661	0.0014	-0.0554	-0.0004
86	SLU 83	0.05881	0	-0.01661	0.0014	-0.0554	-0.0004
86	SLU 84	0.05639	-0.00003	-0.01776	0.0014	-0.054	-0.0004
86	SLU 85	0.05941	-0.00002	-0.01723	0.0014	-0.0562	-0.0004
86	SLU 86	0.06393	0	-0.01644	0.0014	-0.0595	-0.0004
86	SLU 87	0.06393	0	-0.01644	0.0014	-0.0595	-0.0004
86	SLU 88	0.06151	-0.00002	-0.01759	0.0014	-0.0581	-0.0004
86	SLU 89	0.06152	-0.00002	-0.01759	0.0014	-0.0581	-0.0004
86	SLU 90	0.06453	-0.00001	-0.01706	0.0014	-0.0603	-0.0004
86	SLU 91	0.06453	-0.00001	-0.01706	0.0014	-0.0603	-0.0004
86	SLU 92	0.05768	-0.00018	-0.01862	0.0017	-0.0554	-0.0005
86	SLU 93	0.05768	-0.00018	-0.01862	0.0017	-0.0555	-0.0005
86	SLU 94	0.0607	-0.00017	-0.0181	0.0017	-0.0576	-0.0005
86	SLU 95	0.0607	-0.00017	-0.01809	0.0017	-0.0577	-0.0005
86	SLU 96	0.06281	-0.00018	-0.01845	0.0017	-0.0595	-0.0005
86	SLU 97	0.06281	-0.00018	-0.01845	0.0017	-0.0596	-0.0005
86	SLU 98	0.06583	-0.00017	-0.01793	0.0017	-0.0617	-0.0005
86	SLU 99	0.06583	-0.00017	-0.01793	0.0017	-0.0618	-0.0005
86	SLU 100	0.04697	0.00008	-0.01747	0.0012	-0.0462	-0.0004
86	SLU 101	0.04698	0.00007	-0.01747	0.0012	-0.0462	-0.0004
86	SLU 102	0.05	0.00008	-0.01694	0.0012	-0.0484	-0.0004
86	SLU 103	0.05452	0.0001	-0.01615	0.0012	-0.0517	-0.0004
86	SLU 104	0.05452	0.0001	-0.01615	0.0012	-0.0517	-0.0004
86	SLU 105	0.05211	0.00008	-0.0173	0.0012	-0.0503	-0.0004
86	SLU 106	0.05512	0.00009	-0.01677	0.0012	-0.0525	-0.0004
86	SLU 107	0.05965	0.0001	-0.01598	0.0012	-0.0558	-0.0004
86	SLU 108	0.05965	0.0001	-0.01598	0.0012	-0.0558	-0.0004
86	SLU 109	0.05723	0.00008	-0.01713	0.0012	-0.0544	-0.0004
86	SLU 110	0.05723	0.00008	-0.01713	0.0012	-0.0544	-0.0004
86	SLU 111	0.06025	0.00009	-0.0166	0.0012	-0.0566	-0.0004
86	SLU 112	0.06025	0.00009	-0.0166	0.0012	-0.0566	-0.0004
86	SLU 113	0.05126	-0.00003	-0.01793	0.0014	-0.0499	-0.0004
86	SLU 114	0.05428	-0.00002	-0.0174	0.0014	-0.0521	-0.0004
86	SLU 115	0.0588	0	-0.01661	0.0014	-0.0554	-0.0004
86	SLU 116	0.05881	0	-0.01661	0.0014	-0.0554	-0.0004
86	SLU 117	0.05639	-0.00003	-0.01776	0.0014	-0.054	-0.0004
86	SLU 118	0.05941	-0.00002	-0.01723	0.0014	-0.0562	-0.0004
86	SLU 119	0.06393	0	-0.01644	0.0014	-0.0595	-0.0004
86	SLU 120	0.06393	0	-0.01644	0.0014	-0.0595	-0.0004
86	SLU 121	0.06151	-0.00002	-0.01759	0.0014	-0.0581	-0.0004
86	SLU 122	0.06152	-0.00002	-0.01759	0.0014	-0.0581	-0.0004
86	SLU 123	0.06453	-0.00001	-0.01706	0.0014	-0.0603	-0.0004
86	SLU 124	0.06453	-0.00001	-0.01706	0.0014	-0.0603	-0.0004
86	SLU 125	0.05768	-0.00018	-0.01862	0.0017	-0.0554	-0.0005
86	SLU 126	0.05768	-0.00018	-0.01862	0.0017	-0.0555	-0.0005
86	SLU 127	0.0607	-0.00017	-0.0181	0.0017	-0.0576	-0.0005
86	SLU 128	0.0607	-0.00017	-0.01809	0.0017	-0.0577	-0.0005
86	SLU 129	0.06281	-0.00018	-0.01845	0.0017	-0.0595	-0.0005
86	SLU 130	0.06281	-0.00018	-0.01845	0.0017	-0.0596	-0.0005
86	SLU 131	0.06583	-0.00017	-0.01793	0.0017	-0.0617	-0.0005
86	SLU 132	0.06583	-0.00017	-0.01793	0.0017	-0.0618	-0.0005
86	SLE RA 1	0.03613	0.00006	-0.01344	0.0009	-0.0355	-0.0003
86	SLE RA 2	0.03614	0.00006	-0.01344	0.0009	-0.0355	-0.0003
86	SLE RA 3	0.03815	0.00006	-0.01308	0.0009	-0.037	-0.0003
86	SLE RA 4	0.04116	0.00008	-0.01256	0.0009	-0.0392	-0.0003
86	SLE RA 5	0.04117	0.00007	-0.01256	0.0009	-0.0392	-0.0003
86	SLE RA 6	0.03955	0.00006	-0.01332	0.0009	-0.0382	-0.0003
86	SLE RA 7	0.04157	0.00006	-0.01297	0.0009	-0.0397	-0.0003
86	SLE RA 8	0.04458	0.00008	-0.01245	0.0009	-0.0419	-0.0003
86	SLE RA 9	0.04459	0.00008	-0.01244	0.0009	-0.0419	-0.0003
86	SLE RA 10	0.04297	0.00006	-0.01321	0.001	-0.041	-0.0003
86	SLE RA 11	0.04297	0.00006	-0.01321	0.0009	-0.041	-0.0003
86	SLE RA 12	0.04498	0.00007	-0.01286	0.001	-0.0424	-0.0003
86	SLE RA 13	0.04499	0.00007	-0.01286	0.0009	-0.0424	-0.0003
86	SLE RA 14	0.03899	-0.00001	-0.01374	0.001	-0.038	-0.0003
86	SLE RA 15	0.041	-0.00001	-0.01339	0.001	-0.0395	-0.0003
86	SLE RA 16	0.04402	0.00001	-0.01287	0.001	-0.0417	-0.0003
86	SLE RA 17	0.04402	0.00001	-0.01287	0.001	-0.0417	-0.0003
86	SLE RA 18	0.04241	-0.00001	-0.01363	0.0011	-0.0407	-0.0003
86	SLE RA 19	0.04442	0	-0.01328	0.0011	-0.0422	-0.0003
86	SLE RA 20	0.04744	0.00001	-0.01275	0.0011	-0.0444	-0.0003
86	SLE RA 21	0.04744	0.00001	-0.01275	0.0011	-0.0444	-0.0003
86	SLE RA 22	0.04583	-0.00001	-0.01352	0.0011	-0.0434	-0.0003
86	SLE RA 23	0.04583	-0.00001	-0.01352	0.0011	-0.0435	-0.0003
86	SLE RA 24	0.04784	0	-0.01317	0.0011	-0.0449	-0.0003
86	SLE RA 25	0.04784	0	-0.01317	0.0011	-0.0449	-0.0003
86	SLE RA 26	0.04327	-0.00011	-0.01421	0.0012	-0.0417	-0.0004
86	SLE RA 27	0.04327	-0.00011	-0.01421	0.0012	-0.0417	-0.0004
86	SLE RA 28	0.04528	-0.00011	-0.01386	0.0012	-0.0432	-0.0004
86	SLE RA 29	0.04529	-0.00011	-0.01386	0.0012	-0.0432	-0.0004
86	SLE RA 30	0.04669	-0.00011	-0.01409	0.0013	-0.0444	-0.0004
86	SLE RA 31	0.04669	-0.00011	-0.01409	0.0012	-0.0444	-0.0004
86	SLE RA 32	0.0487	-0.0001	-0.01374	0.0013	-0.0459	-0.0004
86	SLE RA 33	0.04871	-0.00011	-0.01374	0.0012	-0.0459	-0.0004
86	SLE FR 1	0.03613	0.00006	-0.01344	0.0009	-0.0355	-0.0003
86	SLE FR 2	0.03614	0.00006	-0.01344	0.0009	-0.0355	-0.0003
86	SLE FR 3	0.03814	0.00007	-0.01309	0.0009	-0.037	-0.0003
86	SLE FR 4	0.0375	0.00006	-0.01339	0.0009	-0.0366	-0.0003
86	SLE FR 5	0.03899	-0.00001	-0.01375	0.001	-0.038	-0.0003
86	SLE QP 1	0.03613	0.00006	-0.01344	0.0009	-0.0355	-0.0003
86	SLO 1	-0.09771	-0.15984	-0.09696	0.0776	-0.0658	0.0957
86	SLO 2	-0.09771	-0.15984	-0.09696	0.0776	-0.0658	0.0957
86	SLO 3	-0.09771	0.15996	-0.09696	-0.0758	-0.0658	-0.0963
86	SLO 4	-0.09771	0.15996	-0.09696	-0.0758	-0.0658	-0.0963
86	SLO 5	-0.00402	-0.53293	-0.0385	0.2565	-0.0446	0.3196

Nodo	Cont.	Spostamento			Rotazione		
Ind.	N.br.	ux	uy	uz	rx	ry	rz
86	SLO 6	-0.00402	-0.53293	-0.0385	0.2565	-0.0446	0.3196
86	SLO 7	-0.00402	0.53305	-0.0385	-0.2547	-0.0446	-0.3202
86	SLO 8	-0.00402	0.53305	-0.0385	-0.2547	-0.0446	-0.3202
86	SLO 9	0.07629	-0.53293	0.01162	0.2565	-0.0264	0.3196
86	SLO 10	0.07629	-0.53293	0.01162	0.2565	-0.0264	0.3196
86	SLO 11	0.07629	0.53305	0.01162	-0.2547	-0.0264	-0.3202
86	SLO 12	0.07629	0.53305	0.01162	-0.2547	-0.0264	-0.3202
86	SLO 13	0.16998	-0.15984	0.07009	0.0776	-0.0052	0.0957
86	SLO 14	0.16998	-0.15984	0.07009	0.0776	-0.0052	0.0957
86	SLO 15	0.16998	0.15996	0.07009	-0.0758	-0.0052	-0.0963
86	SLO 16	0.16998	0.15996	0.07009	-0.0758	-0.0052	-0.0963
86	SLD 1	-0.07369	-0.14768	-0.08197	0.0718	-0.0603	0.0884
86	SLD 2	-0.07369	-0.14768	-0.08197	0.0718	-0.0603	0.0884
86	SLD 3	-0.07369	0.1478	-0.08197	-0.0699	-0.0603	-0.089
86	SLD 4	-0.07369	0.1478	-0.08197	-0.0699	-0.0603	-0.089
86	SLD 5	0.00319	-0.49242	-0.034	0.2371	-0.043	0.2953
86	SLD 6	0.00319	-0.49242	-0.034	0.2371	-0.043	0.2953
86	SLD 7	0.00319	0.49254	-0.034	-0.2352	-0.043	-0.2959
86	SLD 8	0.00319	0.49254	-0.034	-0.2352	-0.043	-0.2959
86	SLD 9	0.06908	-0.49242	0.00712	0.2371	-0.028	0.2953
86	SLD 10	0.06908	-0.49242	0.00712	0.2371	-0.028	0.2953
86	SLD 11	0.06908	0.49254	0.00712	-0.2352	-0.028	-0.2959
86	SLD 12	0.06908	0.49254	0.00712	-0.2352	-0.028	-0.2959
86	SLD 13	0.14596	-0.14768	0.0551	0.0718	-0.0107	0.0884
86	SLD 14	0.14596	-0.14768	0.0551	0.0718	-0.0107	0.0884
86	SLD 15	0.14596	0.1478	0.0551	-0.0699	-0.0107	-0.089
86	SLD 16	0.14596	0.1478	0.0551	-0.0699	-0.0107	-0.089
86	SLV 1	-0.20922	-0.38962	-0.16655	0.1878	-0.091	0.2336
86	SLV 2	-0.20922	-0.38962	-0.16655	0.1878	-0.091	0.2336
86	SLV 3	-0.20922	0.38973	-0.16655	-0.1859	-0.091	-0.2342
86	SLV 4	-0.20922	0.38973	-0.16655	-0.1859	-0.091	-0.2342
86	SLV 5	-0.03747	-1.29886	-0.05937	0.6237	-0.0522	0.7793
86	SLV 6	-0.03747	-1.29886	-0.05937	0.6237	-0.0522	0.7793
86	SLV 7	-0.03747	1.29898	-0.05937	-0.6219	-0.0522	-0.7799
86	SLV 8	-0.03747	1.29898	-0.05937	-0.6219	-0.0522	-0.7799
86	SLV 9	0.10974	-1.29886	0.0325	0.6237	-0.0189	0.7793
86	SLV 10	0.10974	-1.29886	0.0325	0.6237	-0.0189	0.7793
86	SLV 11	0.10974	1.29898	0.0325	-0.6219	-0.0189	-0.7799
86	SLV 12	0.10974	1.29898	0.0325	-0.6219	-0.0189	-0.7799
86	SLV 13	0.28148	-0.38961	0.13967	0.1878	0.02	0.2336
86	SLV 14	0.28148	-0.38961	0.13967	0.1878	0.02	0.2336
86	SLV 15	0.28148	0.38974	0.13967	-0.1859	0.02	-0.2342
86	SLV 16	0.28148	0.38974	0.13967	-0.1859	0.02	-0.2342
87	SLU 1	-0.03614	0.00008	-0.01343	0.0029	0.0355	0.0011
87	SLU 2	-0.03614	0.00008	-0.01343	0.0029	0.0355	0.0011
87	SLU 3	-0.03916	0.00009	-0.01291	0.003	0.0377	0.0011
87	SLU 4	-0.04369	0.00011	-0.01212	0.003	0.041	0.0011
87	SLU 5	-0.04369	0.00011	-0.01212	0.003	0.041	0.0011
87	SLU 6	-0.0409	0.00008	-0.01351	0.0031	0.0397	0.0011
87	SLU 7	-0.04392	0.00009	-0.01298	0.0031	0.0419	0.0011
87	SLU 8	-0.04845	0.00011	-0.01219	0.0031	0.0452	0.0011
87	SLU 9	-0.04845	0.00011	-0.01219	0.0031	0.0452	0.0011
87	SLU 10	-0.04566	0.00009	-0.01359	0.0031	0.0439	0.0011
87	SLU 11	-0.04566	0.00009	-0.01359	0.0032	0.0439	0.0011
87	SLU 12	-0.04868	0.0001	-0.01306	0.0032	0.0461	0.0012
87	SLU 13	-0.04868	0.0001	-0.01306	0.0032	0.0461	0.0012
87	SLU 14	-0.03981	-0.00002	-0.01431	0.0032	0.0394	0.0011
87	SLU 15	-0.04283	-0.00001	-0.01378	0.0032	0.0416	0.0012
87	SLU 16	-0.04736	0.00001	-0.01299	0.0033	0.0449	0.0012
87	SLU 17	-0.04736	0.00001	-0.01299	0.0033	0.0449	0.0012
87	SLU 18	-0.04458	-0.00002	-0.01439	0.0033	0.0436	0.0012
87	SLU 19	-0.0476	-0.00001	-0.01386	0.0033	0.0458	0.0012
87	SLU 20	-0.05212	0.00001	-0.01307	0.0034	0.0492	0.0012
87	SLU 21	-0.05212	0.00001	-0.01307	0.0034	0.0492	0.0012
87	SLU 22	-0.04934	-0.00001	-0.01446	0.0034	0.0479	0.0012
87	SLU 23	-0.04934	-0.00001	-0.01446	0.0034	0.0479	0.0012
87	SLU 24	-0.05236	0	-0.01393	0.0034	0.0501	0.0012
87	SLU 25	-0.05236	0	-0.01393	0.0034	0.0501	0.0012
87	SLU 26	-0.04533	-0.00017	-0.01562	0.0036	0.0453	0.0013
87	SLU 27	-0.04533	-0.00017	-0.01562	0.0036	0.0453	0.0013
87	SLU 28	-0.04834	-0.00016	-0.01509	0.0036	0.0475	0.0013
87	SLU 29	-0.04834	-0.00016	-0.01509	0.0036	0.0475	0.0013
87	SLU 30	-0.05009	-0.00017	-0.01569	0.0037	0.0495	0.0013
87	SLU 31	-0.05009	-0.00017	-0.01569	0.0037	0.0495	0.0013
87	SLU 32	-0.05311	-0.00016	-0.01517	0.0037	0.0517	0.0013
87	SLU 33	-0.05311	-0.00016	-0.01517	0.0037	0.0517	0.0013
87	SLU 34	-0.03614	0.00008	-0.01343	0.0029	0.0355	0.0011
87	SLU 35	-0.03614	0.00008	-0.01343	0.0029	0.0355	0.0011
87	SLU 36	-0.03916	0.00009	-0.01291	0.003	0.0377	0.0011
87	SLU 37	-0.04369	0.00011	-0.01212	0.003	0.041	0.0011
87	SLU 38	-0.04369	0.00011	-0.01212	0.003	0.041	0.0011
87	SLU 39	-0.0409	0.00008	-0.01351	0.0031	0.0397	0.0011
87	SLU 40	-0.04392	0.00009	-0.01298	0.0031	0.0419	0.0011
87	SLU 41	-0.04845	0.00011	-0.01219	0.0031	0.0452	0.0011
87	SLU 42	-0.04845	0.00011	-0.01219	0.0031	0.0452	0.0011
87	SLU 43	-0.04566	0.00009	-0.01359	0.0031	0.0439	0.0011
87	SLU 44	-0.04566	0.00009	-0.01359	0.0032	0.0439	0.0011
87	SLU 45	-0.04868	0.0001	-0.01306	0.0032	0.0461	0.0012
87	SLU 46	-0.04868	0.0001	-0.01306	0.0032	0.0461	0.0012
87	SLU 47	-0.03981	-0.00002	-0.01431	0.0032	0.0394	0.0011
87	SLU 48	-0.04283	-0.00001	-0.01378	0.0032	0.0416	0.0012
87	SLU 49	-0.04736	0.00001	-0.01299	0.0033	0.0449	0.0012
87	SLU 50	-0.04736	0.00001	-0.01299	0.0033	0.0449	0.0012
87	SLU 51	-0.04458	-0.00002	-0.01439	0.0033	0.0436	0.0012
87	SLU 52	-0.0476	-0.00001	-0.01386	0.0033	0.0458	0.0012

Nodo	Cont.	Spostamento			Rotazione		
Ind.	N.br.	ux	uy	uz	rx	ry	rz
87	SLU 53	-0.05212	0.00001	-0.01307	0.0034	0.0492	0.0012
87	SLU 54	-0.05212	0.00001	-0.01307	0.0034	0.0492	0.0012
87	SLU 55	-0.04934	-0.00001	-0.01446	0.0034	0.0479	0.0012
87	SLU 56	-0.04934	-0.00001	-0.01446	0.0034	0.0479	0.0012
87	SLU 57	-0.05236	0	-0.01393	0.0034	0.0501	0.0012
87	SLU 58	-0.05236	0	-0.01393	0.0034	0.0501	0.0012
87	SLU 59	-0.04533	-0.00017	-0.01562	0.0036	0.0453	0.0013
87	SLU 60	-0.04533	-0.00017	-0.01562	0.0036	0.0453	0.0013
87	SLU 61	-0.04834	-0.00016	-0.01509	0.0036	0.0475	0.0013
87	SLU 62	-0.04834	-0.00016	-0.01509	0.0036	0.0475	0.0013
87	SLU 63	-0.05009	-0.00017	-0.01569	0.0037	0.0495	0.0013
87	SLU 64	-0.05009	-0.00017	-0.01569	0.0037	0.0495	0.0013
87	SLU 65	-0.05311	-0.00016	-0.01517	0.0037	0.0517	0.0013
87	SLU 66	-0.05311	-0.00016	-0.01517	0.0037	0.0517	0.0013
87	SLU 67	-0.04698	0.00011	-0.01747	0.0038	0.0462	0.0014
87	SLU 68	-0.04698	0.00011	-0.01747	0.0038	0.0462	0.0014
87	SLU 69	-0.05	0.00012	-0.01694	0.0039	0.0484	0.0014
87	SLU 70	-0.05453	0.00013	-0.01615	0.0039	0.0517	0.0014
87	SLU 71	-0.05453	0.00013	-0.01615	0.0039	0.0517	0.0014
87	SLU 72	-0.05174	0.00011	-0.01754	0.0039	0.0504	0.0014
87	SLU 73	-0.05476	0.00012	-0.01701	0.004	0.0526	0.0014
87	SLU 74	-0.05929	0.00014	-0.01622	0.004	0.0559	0.0015
87	SLU 75	-0.05929	0.00013	-0.01622	0.004	0.0559	0.0015
87	SLU 76	-0.05651	0.00012	-0.01762	0.004	0.0546	0.0015
87	SLU 77	-0.05651	0.00011	-0.01762	0.004	0.0546	0.0015
87	SLU 78	-0.05953	0.00013	-0.01709	0.004	0.0568	0.0015
87	SLU 79	-0.05953	0.00012	-0.01709	0.0041	0.0568	0.0015
87	SLU 80	-0.05065	0	-0.01834	0.0041	0.0501	0.0015
87	SLU 81	-0.05367	0.00001	-0.01781	0.0041	0.0523	0.0015
87	SLU 82	-0.0582	0.00003	-0.01702	0.0042	0.0556	0.0015
87	SLU 83	-0.0582	0.00003	-0.01702	0.0042	0.0556	0.0015
87	SLU 84	-0.05542	0.00001	-0.01842	0.0042	0.0543	0.0015
87	SLU 85	-0.05844	0.00002	-0.01789	0.0042	0.0565	0.0015
87	SLU 86	-0.06296	0.00004	-0.0171	0.0043	0.0598	0.0015
87	SLU 87	-0.06296	0.00003	-0.0171	0.0043	0.0598	0.0015
87	SLU 88	-0.06018	0.00001	-0.01849	0.0043	0.0585	0.0015
87	SLU 89	-0.06018	0.00001	-0.01849	0.0043	0.0585	0.0015
87	SLU 90	-0.0632	0.00002	-0.01797	0.0043	0.0607	0.0015
87	SLU 91	-0.0632	0.00002	-0.01797	0.0043	0.0607	0.0016
87	SLU 92	-0.05617	-0.00014	-0.01965	0.0045	0.0559	0.0016
87	SLU 93	-0.05617	-0.00015	-0.01965	0.0045	0.0559	0.0016
87	SLU 94	-0.05919	-0.00013	-0.01912	0.0045	0.0581	0.0016
87	SLU 95	-0.05919	-0.00014	-0.01912	0.0045	0.0581	0.0016
87	SLU 96	-0.06093	-0.00014	-0.01973	0.0046	0.0602	0.0016
87	SLU 97	-0.06093	-0.00014	-0.01973	0.0046	0.0602	0.0016
87	SLU 98	-0.06395	-0.00013	-0.0192	0.0046	0.0624	0.0016
87	SLU 99	-0.06395	-0.00013	-0.0192	0.0046	0.0624	0.0016
87	SLU 100	-0.04698	0.00011	-0.01747	0.0038	0.0462	0.0014
87	SLU 101	-0.04698	0.00011	-0.01747	0.0038	0.0462	0.0014
87	SLU 102	-0.05	0.00012	-0.01694	0.0039	0.0484	0.0014
87	SLU 103	-0.05453	0.00013	-0.01615	0.0039	0.0517	0.0014
87	SLU 104	-0.05453	0.00013	-0.01615	0.0039	0.0517	0.0014
87	SLU 105	-0.05174	0.00011	-0.01754	0.0039	0.0504	0.0014
87	SLU 106	-0.05476	0.00012	-0.01701	0.004	0.0526	0.0014
87	SLU 107	-0.05929	0.00014	-0.01622	0.004	0.0559	0.0015
87	SLU 108	-0.05929	0.00013	-0.01622	0.004	0.0559	0.0015
87	SLU 109	-0.05651	0.00012	-0.01762	0.004	0.0546	0.0015
87	SLU 110	-0.05651	0.00011	-0.01762	0.004	0.0546	0.0015
87	SLU 111	-0.05953	0.00013	-0.01709	0.004	0.0568	0.0015
87	SLU 112	-0.05953	0.00012	-0.01709	0.0041	0.0568	0.0015
87	SLU 113	-0.05065	0	-0.01834	0.0041	0.0501	0.0015
87	SLU 114	-0.05367	0.00001	-0.01781	0.0041	0.0523	0.0015
87	SLU 115	-0.0582	0.00003	-0.01702	0.0042	0.0556	0.0015
87	SLU 116	-0.0582	0.00003	-0.01702	0.0042	0.0556	0.0015
87	SLU 117	-0.05542	0.00001	-0.01842	0.0042	0.0543	0.0015
87	SLU 118	-0.05844	0.00002	-0.01789	0.0042	0.0565	0.0015
87	SLU 119	-0.06296	0.00004	-0.0171	0.0043	0.0598	0.0015
87	SLU 120	-0.06296	0.00003	-0.0171	0.0043	0.0598	0.0015
87	SLU 121	-0.06018	0.00001	-0.01849	0.0043	0.0585	0.0015
87	SLU 122	-0.06018	0.00001	-0.01849	0.0043	0.0585	0.0015
87	SLU 123	-0.0632	0.00002	-0.01797	0.0043	0.0607	0.0015
87	SLU 124	-0.0632	0.00002	-0.01797	0.0043	0.0607	0.0016
87	SLU 125	-0.05617	-0.00014	-0.01965	0.0045	0.0559	0.0016
87	SLU 126	-0.05617	-0.00015	-0.01965	0.0045	0.0559	0.0016
87	SLU 127	-0.05919	-0.00013	-0.01912	0.0045	0.0581	0.0016
87	SLU 128	-0.05919	-0.00014	-0.01912	0.0045	0.0581	0.0016
87	SLU 129	-0.06093	-0.00014	-0.01973	0.0046	0.0602	0.0016
87	SLU 130	-0.06093	-0.00014	-0.01973	0.0046	0.0602	0.0016
87	SLU 131	-0.06395	-0.00013	-0.0192	0.0046	0.0624	0.0016
87	SLU 132	-0.06395	-0.00013	-0.0192	0.0046	0.0624	0.0016
87	SLE RA 1	-0.03614	0.00008	-0.01343	0.0029	0.0355	0.0011
87	SLE RA 2	-0.03614	0.00008	-0.01343	0.0029	0.0355	0.0011
87	SLE RA 3	-0.03815	0.00009	-0.01308	0.003	0.037	0.0011
87	SLE RA 4	-0.04117	0.0001	-0.01256	0.003	0.0392	0.0011
87	SLE RA 5	-0.04117	0.0001	-0.01256	0.003	0.0392	0.0011
87	SLE RA 6	-0.03931	0.00008	-0.01349	0.003	0.0383	0.0011
87	SLE RA 7	-0.04133	0.00009	-0.01313	0.003	0.0398	0.0011
87	SLE RA 8	-0.04435	0.0001	-0.01261	0.003	0.042	0.0011
87	SLE RA 9	-0.04435	0.0001	-0.01261	0.0031	0.042	0.0011
87	SLE RA 10	-0.04249	0.00009	-0.01354	0.0031	0.0411	0.0011
87	SLE RA 11	-0.04249	0.00009	-0.01354	0.0031	0.0411	0.0011
87	SLE RA 12	-0.0445	0.0001	-0.01319	0.0031	0.0426	0.0011
87	SLE RA 13	-0.0445	0.00009	-0.01319	0.0031	0.0426	0.0011
87	SLE RA 14	-0.03859	0.00001	-0.01402	0.0031	0.0381	0.0011
87	SLE RA 15	-0.0406	0.00002	-0.01367	0.0031	0.0396	0.0011

Nodo	Cont.	Spostamento			Rotazione		
Ind.	N.br.	ux	uy	uz	rx	ry	rz
87	SLE RA 16	-0.04362	0.00003	-0.01314	0.0032	0.0418	0.0011
87	SLE RA 17	-0.04362	0.00003	-0.01314	0.0032	0.0418	0.0011
87	SLE RA 18	-0.04176	0.00002	-0.01407	0.0032	0.0409	0.0011
87	SLE RA 19	-0.04378	0.00002	-0.01372	0.0032	0.0424	0.0012
87	SLE RA 20	-0.0468	0.00004	-0.01319	0.0032	0.0446	0.0012
87	SLE RA 21	-0.0468	0.00003	-0.01319	0.0032	0.0446	0.0012
87	SLE RA 22	-0.04494	0.00002	-0.01412	0.0033	0.0437	0.0012
87	SLE RA 23	-0.04494	0.00002	-0.01412	0.0033	0.0437	0.0012
87	SLE RA 24	-0.04695	0.00003	-0.01377	0.0033	0.0452	0.0012
87	SLE RA 25	-0.04695	0.00003	-0.01377	0.0033	0.0452	0.0012
87	SLE RA 26	-0.04226	-0.00008	-0.01489	0.0034	0.042	0.0012
87	SLE RA 27	-0.04226	-0.00009	-0.01489	0.0034	0.042	0.0012
87	SLE RA 28	-0.04428	-0.00008	-0.01454	0.0034	0.0435	0.0012
87	SLE RA 29	-0.04428	-0.00008	-0.01454	0.0034	0.0435	0.0012
87	SLE RA 30	-0.04544	-0.00008	-0.01494	0.0035	0.0448	0.0012
87	SLE RA 31	-0.04544	-0.00008	-0.01494	0.0035	0.0448	0.0012
87	SLE RA 32	-0.04745	-0.00008	-0.01459	0.0035	0.0463	0.0012
87	SLE RA 33	-0.04745	-0.00008	-0.01459	0.0035	0.0463	0.0012
87	SLE FR 1	-0.03614	0.00008	-0.01343	0.0029	0.0355	0.0011
87	SLE FR 2	-0.03614	0.00008	-0.01343	0.0029	0.0355	0.0011
87	SLE FR 3	-0.03815	0.00009	-0.01308	0.003	0.037	0.0011
87	SLE FR 4	-0.03741	0.00009	-0.01346	0.003	0.0366	0.0011
87	SLE FR 5	-0.03859	0.00002	-0.01402	0.0031	0.0381	0.0011
87	SLE QP 1	-0.03614	0.00008	-0.01343	0.0029	0.0355	0.0011
87	SLO 1	-0.17012	-0.15982	0.07018	0.0797	0.0052	-0.0949
87	SLO 2	-0.17012	-0.15982	0.07018	0.0797	0.0052	-0.0949
87	SLO 3	-0.17012	0.15999	0.07018	-0.0738	0.0052	0.097
87	SLO 4	-0.17012	0.15999	0.07018	-0.0738	0.0052	0.097
87	SLO 5	-0.07633	-0.53293	0.01165	0.2587	0.0264	-0.3186
87	SLO 6	-0.07633	-0.53293	0.01165	0.2587	0.0264	-0.3186
87	SLO 7	-0.07633	0.5331	0.01165	-0.2529	0.0264	0.3208
87	SLO 8	-0.07633	0.5331	0.01165	-0.2529	0.0264	0.3208
87	SLO 9	0.00405	-0.53293	-0.03852	0.2588	0.0446	-0.3186
87	SLO 10	0.00405	-0.53293	-0.03852	0.2588	0.0446	-0.3186
87	SLO 11	0.00406	0.5331	-0.03852	-0.2529	0.0446	0.3208
87	SLO 12	0.00406	0.5331	-0.03852	-0.2529	0.0446	0.3208
87	SLO 13	0.09784	-0.15982	-0.09705	0.0797	0.0658	-0.0948
87	SLO 14	0.09784	-0.15982	-0.09705	0.0797	0.0658	-0.0948
87	SLO 15	0.09784	0.15999	-0.09705	-0.0738	0.0658	0.097
87	SLO 16	0.09784	0.15999	-0.09705	-0.0738	0.0658	0.097
87	SLD 1	-0.14607	-0.14766	0.05517	0.0738	0.0106	-0.0876
87	SLD 2	-0.14607	-0.14766	0.05517	0.0738	0.0106	-0.0876
87	SLD 3	-0.14607	0.14783	0.05517	-0.068	0.0106	0.0897
87	SLD 4	-0.14607	0.14783	0.05517	-0.068	0.0106	0.0897
87	SLD 5	-0.06912	-0.49241	0.00715	0.2393	0.028	-0.2943
87	SLD 6	-0.06912	-0.49241	0.00715	0.2393	0.028	-0.2943
87	SLD 7	-0.06912	0.49258	0.00715	-0.2334	0.028	0.2965
87	SLD 8	-0.06912	0.49258	0.00715	-0.2334	0.028	0.2965
87	SLD 9	-0.00316	-0.49241	-0.03402	0.2393	0.043	-0.2943
87	SLD 10	-0.00316	-0.49241	-0.03402	0.2393	0.043	-0.2943
87	SLD 11	-0.00316	0.49258	-0.03402	-0.2334	0.043	0.2965
87	SLD 12	-0.00316	0.49258	-0.03402	-0.2334	0.043	0.2965
87	SLD 13	0.07379	-0.14766	-0.08204	0.0739	0.0604	-0.0875
87	SLD 14	0.07379	-0.14766	-0.08204	0.0739	0.0604	-0.0875
87	SLD 15	0.07379	0.14783	-0.08204	-0.068	0.0604	0.0897
87	SLD 16	0.07379	0.14783	-0.08204	-0.068	0.0604	0.0897
87	SLV 1	-0.28173	-0.38961	0.13983	0.1899	-0.0201	-0.2327
87	SLV 2	-0.28173	-0.38961	0.13983	0.1899	-0.0201	-0.2327
87	SLV 3	-0.28173	0.38977	0.13983	-0.1841	-0.0201	0.2348
87	SLV 4	-0.28173	0.38977	0.13983	-0.1841	-0.0201	0.2348
87	SLV 5	-0.10982	-1.29888	0.03254	0.6264	0.0188	-0.7781
87	SLV 6	-0.10982	-1.29888	0.03254	0.6264	0.0188	-0.7781
87	SLV 7	-0.10982	1.29905	0.03254	-0.6205	0.0188	0.7802
87	SLV 8	-0.10982	1.29905	0.03254	-0.6205	0.0188	0.7802
87	SLV 9	0.03754	-1.29888	-0.05941	0.6264	0.0522	-0.778
87	SLV 10	0.03754	-1.29888	-0.05941	0.6264	0.0522	-0.778
87	SLV 11	0.03754	1.29905	-0.05941	-0.6205	0.0522	0.7802
87	SLV 12	0.03754	1.29905	-0.05941	-0.6205	0.0522	0.7802
87	SLV 13	0.20945	-0.3896	-0.1667	0.19	0.0911	-0.2327
87	SLV 14	0.20945	-0.3896	-0.1667	0.19	0.0911	-0.2327
87	SLV 15	0.20945	0.38977	-0.1667	-0.1841	0.0911	0.2348
87	SLV 16	0.20945	0.38977	-0.1667	-0.1841	0.0911	0.2348
88	SLU 1	0.03614	0.00008	-0.01343	0.0029	-0.0355	-0.0011
88	SLU 2	0.03614	0.00008	-0.01343	0.0029	-0.0355	-0.0011
88	SLU 3	0.03916	0.00009	-0.01291	0.003	-0.0377	-0.0011
88	SLU 4	0.04369	0.00011	-0.01212	0.003	-0.041	-0.0011
88	SLU 5	0.04369	0.00011	-0.01212	0.003	-0.041	-0.0011
88	SLU 6	0.04116	0.00008	-0.01334	0.003	-0.0396	-0.0011
88	SLU 7	0.04418	0.00009	-0.01281	0.0031	-0.0418	-0.0011
88	SLU 8	0.04871	0.00011	-0.01202	0.0031	-0.0451	-0.0011
88	SLU 9	0.04871	0.00011	-0.01202	0.0031	-0.0451	-0.0011
88	SLU 10	0.04618	0.00009	-0.01324	0.0031	-0.0437	-0.0011
88	SLU 11	0.04618	0.00009	-0.01324	0.0031	-0.0437	-0.0011
88	SLU 12	0.0492	0.0001	-0.01271	0.0032	-0.0459	-0.0012
88	SLU 13	0.0492	0.0001	-0.01271	0.0032	-0.0459	-0.0012
88	SLU 14	0.04024	-0.00002	-0.01402	0.0032	-0.0392	-0.0011
88	SLU 15	0.04326	-0.00001	-0.01349	0.0032	-0.0415	-0.0012
88	SLU 16	0.04779	0.00001	-0.0127	0.0033	-0.0448	-0.0012
88	SLU 17	0.04779	0	-0.0127	0.0033	-0.0448	-0.0012
88	SLU 18	0.04527	-0.00002	-0.01392	0.0033	-0.0434	-0.0012
88	SLU 19	0.04829	-0.00001	-0.01339	0.0033	-0.0456	-0.0012
88	SLU 20	0.05281	0.00001	-0.0126	0.0034	-0.0489	-0.0012
88	SLU 21	0.05281	0.00001	-0.0126	0.0034	-0.0489	-0.0012
88	SLU 22	0.05029	-0.00001	-0.01382	0.0034	-0.0475	-0.0012
88	SLU 23	0.05029	-0.00001	-0.01382	0.0034	-0.0475	-0.0012

Nodo	Cont.	Spostamento			Rotazione		
Ind.	N.br.	ux	uy	uz	rx	ry	rz
88	SLU 24	0.05331	0	-0.01329	0.0034	-0.0497	-0.0012
88	SLU 25	0.05331	0	-0.01329	0.0034	-0.0497	-0.0012
88	SLU 26	0.0464	-0.00017	-0.01489	0.0036	-0.0449	-0.0013
88	SLU 27	0.0464	-0.00017	-0.01489	0.0036	-0.0449	-0.0013
88	SLU 28	0.04942	-0.00016	-0.01436	0.0036	-0.0471	-0.0013
88	SLU 29	0.04942	-0.00016	-0.01436	0.0036	-0.0471	-0.0013
88	SLU 30	0.05143	-0.00017	-0.01479	0.0037	-0.049	-0.0013
88	SLU 31	0.05143	-0.00017	-0.01479	0.0037	-0.049	-0.0013
88	SLU 32	0.05444	-0.00016	-0.01426	0.0037	-0.0512	-0.0013
88	SLU 33	0.05444	-0.00016	-0.01426	0.0037	-0.0512	-0.0013
88	SLU 34	0.03614	0.00008	-0.01343	0.0029	-0.0355	-0.0011
88	SLU 35	0.03614	0.00008	-0.01343	0.0029	-0.0355	-0.0011
88	SLU 36	0.03916	0.00009	-0.01291	0.003	-0.0377	-0.0011
88	SLU 37	0.04369	0.00011	-0.01212	0.003	-0.041	-0.0011
88	SLU 38	0.04369	0.00011	-0.01212	0.003	-0.041	-0.0011
88	SLU 39	0.04116	0.00008	-0.01334	0.003	-0.0396	-0.0011
88	SLU 40	0.04418	0.00009	-0.01281	0.0031	-0.0418	-0.0011
88	SLU 41	0.04871	0.00011	-0.01202	0.0031	-0.0451	-0.0011
88	SLU 42	0.04871	0.00011	-0.01202	0.0031	-0.0451	-0.0011
88	SLU 43	0.04618	0.00009	-0.01324	0.0031	-0.0437	-0.0011
88	SLU 44	0.04618	0.00009	-0.01324	0.0031	-0.0437	-0.0011
88	SLU 45	0.0492	0.0001	-0.01271	0.0032	-0.0459	-0.0012
88	SLU 46	0.0492	0.0001	-0.01271	0.0032	-0.0459	-0.0012
88	SLU 47	0.04024	-0.00002	-0.01402	0.0032	-0.0392	-0.0011
88	SLU 48	0.04326	-0.00001	-0.01349	0.0032	-0.0415	-0.0012
88	SLU 49	0.04779	0.00001	-0.0127	0.0033	-0.0448	-0.0012
88	SLU 50	0.04779	0	-0.0127	0.0033	-0.0448	-0.0012
88	SLU 51	0.04527	-0.00002	-0.01392	0.0033	-0.0434	-0.0012
88	SLU 52	0.04829	-0.00001	-0.01339	0.0033	-0.0456	-0.0012
88	SLU 53	0.05281	0.00001	-0.0126	0.0034	-0.0489	-0.0012
88	SLU 54	0.05281	0.00001	-0.0126	0.0034	-0.0489	-0.0012
88	SLU 55	0.05029	-0.00001	-0.01382	0.0034	-0.0475	-0.0012
88	SLU 56	0.05029	-0.00001	-0.01382	0.0034	-0.0475	-0.0012
88	SLU 57	0.05331	0	-0.01329	0.0034	-0.0497	-0.0012
88	SLU 58	0.05331	0	-0.01329	0.0034	-0.0497	-0.0012
88	SLU 59	0.0464	-0.00017	-0.01489	0.0036	-0.0449	-0.0013
88	SLU 60	0.0464	-0.00017	-0.01489	0.0036	-0.0449	-0.0013
88	SLU 61	0.04942	-0.00016	-0.01436	0.0036	-0.0471	-0.0013
88	SLU 62	0.04942	-0.00016	-0.01436	0.0036	-0.0471	-0.0013
88	SLU 63	0.05143	-0.00017	-0.01479	0.0037	-0.049	-0.0013
88	SLU 64	0.05143	-0.00017	-0.01479	0.0037	-0.049	-0.0013
88	SLU 65	0.05444	-0.00016	-0.01426	0.0037	-0.0512	-0.0013
88	SLU 66	0.05444	-0.00016	-0.01426	0.0037	-0.0512	-0.0013
88	SLU 67	0.04698	0.00011	-0.01747	0.0038	-0.0462	-0.0014
88	SLU 68	0.04698	0.00011	-0.01747	0.0038	-0.0462	-0.0014
88	SLU 69	0.05	0.00012	-0.01694	0.0039	-0.0484	-0.0014
88	SLU 70	0.05453	0.00013	-0.01615	0.0039	-0.0517	-0.0014
88	SLU 71	0.05453	0.00013	-0.01615	0.0039	-0.0517	-0.0014
88	SLU 72	0.052	0.00011	-0.01737	0.0039	-0.0503	-0.0014
88	SLU 73	0.05502	0.00012	-0.01684	0.004	-0.0525	-0.0014
88	SLU 74	0.05955	0.00014	-0.01605	0.004	-0.0558	-0.0015
88	SLU 75	0.05955	0.00013	-0.01605	0.004	-0.0558	-0.0015
88	SLU 76	0.05702	0.00012	-0.01727	0.004	-0.0544	-0.0015
88	SLU 77	0.05702	0.00011	-0.01727	0.004	-0.0544	-0.0015
88	SLU 78	0.06004	0.00013	-0.01674	0.004	-0.0566	-0.0015
88	SLU 79	0.06004	0.00012	-0.01674	0.0041	-0.0566	-0.0015
88	SLU 80	0.05109	0	-0.01805	0.0041	-0.0499	-0.0015
88	SLU 81	0.0541	0.00001	-0.01752	0.0041	-0.0521	-0.0015
88	SLU 82	0.05863	0.00003	-0.01673	0.0042	-0.0554	-0.0015
88	SLU 83	0.05863	0.00003	-0.01673	0.0042	-0.0554	-0.0015
88	SLU 84	0.05611	0.00001	-0.01795	0.0042	-0.054	-0.0015
88	SLU 85	0.05913	0.00002	-0.01742	0.0042	-0.0562	-0.0015
88	SLU 86	0.06365	0.00004	-0.01663	0.0043	-0.0595	-0.0015
88	SLU 87	0.06365	0.00003	-0.01663	0.0043	-0.0595	-0.0015
88	SLU 88	0.06113	0.00001	-0.01785	0.0043	-0.0581	-0.0015
88	SLU 89	0.06113	0.00001	-0.01785	0.0043	-0.0581	-0.0015
88	SLU 90	0.06415	0.00002	-0.01732	0.0043	-0.0603	-0.0015
88	SLU 91	0.06415	0.00002	-0.01732	0.0043	-0.0603	-0.0016
88	SLU 92	0.05725	-0.00014	-0.01892	0.0045	-0.0555	-0.0016
88	SLU 93	0.05725	-0.00015	-0.01892	0.0045	-0.0555	-0.0016
88	SLU 94	0.06026	-0.00013	-0.01839	0.0045	-0.0577	-0.0016
88	SLU 95	0.06026	-0.00014	-0.01839	0.0045	-0.0577	-0.0016
88	SLU 96	0.06227	-0.00014	-0.01882	0.0046	-0.0596	-0.0016
88	SLU 97	0.06227	-0.00014	-0.01882	0.0046	-0.0596	-0.0016
88	SLU 98	0.06529	-0.00013	-0.01829	0.0046	-0.0618	-0.0016
88	SLU 99	0.06529	-0.00013	-0.01829	0.0046	-0.0618	-0.0016
88	SLU 100	0.04698	0.00011	-0.01747	0.0038	-0.0462	-0.0014
88	SLU 101	0.04698	0.00011	-0.01747	0.0038	-0.0462	-0.0014
88	SLU 102	0.05	0.00012	-0.01694	0.0039	-0.0484	-0.0014
88	SLU 103	0.05453	0.00013	-0.01615	0.0039	-0.0517	-0.0014
88	SLU 104	0.05453	0.00013	-0.01615	0.0039	-0.0517	-0.0014
88	SLU 105	0.052	0.00011	-0.01737	0.0039	-0.0503	-0.0014
88	SLU 106	0.05502	0.00012	-0.01684	0.004	-0.0525	-0.0014
88	SLU 107	0.05955	0.00014	-0.01605	0.004	-0.0558	-0.0015
88	SLU 108	0.05955	0.00013	-0.01605	0.004	-0.0558	-0.0015
88	SLU 109	0.05702	0.00012	-0.01727	0.004	-0.0544	-0.0015
88	SLU 110	0.05702	0.00011	-0.01727	0.004	-0.0544	-0.0015
88	SLU 111	0.06004	0.00013	-0.01674	0.004	-0.0566	-0.0015
88	SLU 112	0.06004	0.00012	-0.01674	0.0041	-0.0566	-0.0015
88	SLU 113	0.05109	0	-0.01805	0.0041	-0.0499	-0.0015
88	SLU 114	0.0541	0.00001	-0.01752	0.0041	-0.0521	-0.0015
88	SLU 115	0.05863	0.00003	-0.01673	0.0042	-0.0554	-0.0015
88	SLU 116	0.05863	0.00003	-0.01673	0.0042	-0.0554	-0.0015
88	SLU 117	0.05611	0.00001	-0.01795	0.0042	-0.054	-0.0015
88	SLU 118	0.05913	0.00002	-0.01742	0.0042	-0.0562	-0.0015

Nodo	Cont.	Spostamento			Rotazione		
Ind.	N.br.	ux	uy	uz	rx	ry	rz
88	SLU 119	0.06365	0.00004	-0.01663	0.0043	-0.0595	-0.0015
88	SLU 120	0.06365	0.00003	-0.01663	0.0043	-0.0595	-0.0015
88	SLU 121	0.06113	0.00001	-0.01785	0.0043	-0.0581	-0.0015
88	SLU 122	0.06113	0.00001	-0.01785	0.0043	-0.0581	-0.0015
88	SLU 123	0.06415	0.00002	-0.01732	0.0043	-0.0603	-0.0015
88	SLU 124	0.06415	0.00002	-0.01732	0.0043	-0.0603	-0.0016
88	SLU 125	0.05725	-0.00014	-0.01892	0.0045	-0.0555	-0.0016
88	SLU 126	0.05725	-0.00015	-0.01892	0.0045	-0.0555	-0.0016
88	SLU 127	0.06026	-0.00013	-0.01839	0.0045	-0.0577	-0.0016
88	SLU 128	0.06026	-0.00014	-0.01839	0.0045	-0.0577	-0.0016
88	SLU 129	0.06227	-0.00014	-0.01882	0.0046	-0.0596	-0.0016
88	SLU 130	0.06227	-0.00014	-0.01882	0.0046	-0.0596	-0.0016
88	SLU 131	0.06529	-0.00013	-0.01829	0.0046	-0.0618	-0.0016
88	SLU 132	0.06529	-0.00013	-0.01829	0.0046	-0.0618	-0.0016
88	SLE RA 1	0.03614	0.00008	-0.01343	0.0029	-0.0355	-0.0011
88	SLE RA 2	0.03614	0.00008	-0.01343	0.0029	-0.0355	-0.0011
88	SLE RA 3	0.03815	0.00009	-0.01308	0.003	-0.037	-0.0011
88	SLE RA 4	0.04117	0.0001	-0.01256	0.003	-0.0392	-0.0011
88	SLE RA 5	0.04117	0.0001	-0.01256	0.003	-0.0392	-0.0011
88	SLE RA 6	0.03949	0.00008	-0.01337	0.003	-0.0383	-0.0011
88	SLE RA 7	0.0415	0.00009	-0.01302	0.003	-0.0397	-0.0011
88	SLE RA 8	0.04452	0.0001	-0.01249	0.003	-0.0419	-0.0011
88	SLE RA 9	0.04452	0.0001	-0.01249	0.0031	-0.0419	-0.0011
88	SLE RA 10	0.04283	0.00009	-0.0133	0.0031	-0.041	-0.0011
88	SLE RA 11	0.04283	0.00009	-0.0133	0.0031	-0.041	-0.0011
88	SLE RA 12	0.04485	0.00009	-0.01295	0.0031	-0.0425	-0.0011
88	SLE RA 13	0.04485	0.00009	-0.01295	0.0031	-0.0425	-0.0011
88	SLE RA 14	0.03888	0.00001	-0.01382	0.0031	-0.038	-0.0011
88	SLE RA 15	0.04089	0.00002	-0.01347	0.0031	-0.0395	-0.0011
88	SLE RA 16	0.04391	0.00003	-0.01294	0.0032	-0.0417	-0.0011
88	SLE RA 17	0.04391	0.00003	-0.01294	0.0032	-0.0417	-0.0011
88	SLE RA 18	0.04222	0.00002	-0.01376	0.0032	-0.0407	-0.0011
88	SLE RA 19	0.04424	0.00002	-0.01341	0.0032	-0.0422	-0.0012
88	SLE RA 20	0.04725	0.00004	-0.01288	0.0032	-0.0444	-0.0012
88	SLE RA 21	0.04725	0.00003	-0.01288	0.0032	-0.0444	-0.0012
88	SLE RA 22	0.04557	0.00002	-0.01369	0.0032	-0.0435	-0.0012
88	SLE RA 23	0.04557	0.00002	-0.01369	0.0033	-0.0435	-0.0012
88	SLE RA 24	0.04758	0.00003	-0.01334	0.0033	-0.045	-0.0012
88	SLE RA 25	0.04758	0.00003	-0.01334	0.0033	-0.045	-0.0012
88	SLE RA 26	0.04298	-0.00008	-0.0144	0.0034	-0.0417	-0.0012
88	SLE RA 27	0.04298	-0.00009	-0.0144	0.0034	-0.0417	-0.0012
88	SLE RA 28	0.04499	-0.00008	-0.01405	0.0034	-0.0432	-0.0012
88	SLE RA 29	0.04499	-0.00008	-0.01405	0.0034	-0.0432	-0.0012
88	SLE RA 30	0.04633	-0.00008	-0.01434	0.0034	-0.0445	-0.0012
88	SLE RA 31	0.04633	-0.00009	-0.01434	0.0035	-0.0445	-0.0012
88	SLE RA 32	0.04834	-0.00008	-0.01399	0.0035	-0.046	-0.0012
88	SLE RA 33	0.04834	-0.00008	-0.01399	0.0035	-0.046	-0.0012
88	SLE FR 1	0.03614	0.00008	-0.01343	0.0029	-0.0355	-0.0011
88	SLE FR 2	0.03614	0.00008	-0.01343	0.0029	-0.0355	-0.0011
88	SLE FR 3	0.03815	0.00009	-0.01308	0.003	-0.037	-0.0011
88	SLE FR 4	0.03748	0.00009	-0.01341	0.003	-0.0366	-0.0011
88	SLE FR 5	0.03888	0.00002	-0.01382	0.0031	-0.038	-0.0011
88	SLE QP 1	0.03614	0.00008	-0.01343	0.0029	-0.0355	-0.0011
88	SLO 1	-0.09784	-0.15982	-0.09705	0.0797	-0.0658	0.0948
88	SLO 2	-0.09784	-0.15982	-0.09705	0.0797	-0.0658	0.0948
88	SLO 3	-0.09784	0.15999	-0.09705	-0.0738	-0.0658	-0.097
88	SLO 4	-0.09784	0.15999	-0.09705	-0.0738	-0.0658	-0.097
88	SLO 5	-0.00405	-0.53293	-0.03852	0.2588	-0.0446	0.3186
88	SLO 6	-0.00405	-0.53293	-0.03852	0.2588	-0.0446	0.3186
88	SLO 7	-0.00406	0.5331	-0.03852	-0.2529	-0.0446	-0.3208
88	SLO 8	-0.00406	0.5331	-0.03852	-0.2529	-0.0446	-0.3208
88	SLO 9	0.07633	-0.53293	0.01165	0.2587	-0.0264	0.3186
88	SLO 10	0.07633	-0.53293	0.01165	0.2587	-0.0264	0.3186
88	SLO 11	0.07633	0.5331	0.01165	-0.2529	-0.0264	-0.3208
88	SLO 12	0.07633	0.5331	0.01165	-0.2529	-0.0264	-0.3208
88	SLO 13	0.17012	-0.15982	0.07018	0.0797	-0.0052	0.0949
88	SLO 14	0.17012	-0.15982	0.07018	0.0797	-0.0052	0.0949
88	SLO 15	0.17012	0.15999	0.07018	-0.0738	-0.0052	-0.097
88	SLO 16	0.17012	0.15999	0.07018	-0.0738	-0.0052	-0.097
88	SLD 1	-0.07379	-0.14766	-0.08204	0.0739	-0.0604	0.0875
88	SLD 2	-0.07379	-0.14766	-0.08204	0.0739	-0.0604	0.0875
88	SLD 3	-0.07379	0.14783	-0.08204	-0.068	-0.0604	-0.0897
88	SLD 4	-0.07379	0.14783	-0.08204	-0.068	-0.0604	-0.0897
88	SLD 5	0.00316	-0.49241	-0.03402	0.2393	-0.043	0.2943
88	SLD 6	0.00316	-0.49241	-0.03402	0.2393	-0.043	0.2943
88	SLD 7	0.00316	0.49258	-0.03402	-0.2334	-0.043	-0.2965
88	SLD 8	0.00316	0.49258	-0.03402	-0.2334	-0.043	-0.2965
88	SLD 9	0.06912	-0.49241	0.00715	0.2393	-0.028	0.2943
88	SLD 10	0.06912	-0.49241	0.00715	0.2393	-0.028	0.2943
88	SLD 11	0.06912	0.49258	0.00715	-0.2334	-0.028	-0.2965
88	SLD 12	0.06912	0.49258	0.00715	-0.2334	-0.028	-0.2965
88	SLD 13	0.14607	-0.14766	0.05517	0.0738	-0.0106	0.0876
88	SLD 14	0.14607	-0.14766	0.05517	0.0738	-0.0106	0.0876
88	SLD 15	0.14607	0.14783	0.05517	-0.068	-0.0106	-0.0897
88	SLD 16	0.14607	0.14783	0.05517	-0.068	-0.0106	-0.0897
88	SLV 1	-0.20945	-0.3896	-0.1667	0.19	-0.0911	0.2327
88	SLV 2	-0.20945	-0.3896	-0.1667	0.19	-0.0911	0.2327
88	SLV 3	-0.20945	0.38977	-0.1667	-0.1841	-0.0911	-0.2348
88	SLV 4	-0.20945	0.38977	-0.1667	-0.1841	-0.0911	-0.2348
88	SLV 5	-0.03754	-1.29888	-0.05941	0.6264	-0.0522	0.778
88	SLV 6	-0.03754	-1.29888	-0.05941	0.6264	-0.0522	0.778
88	SLV 7	-0.03754	1.29905	-0.05941	-0.6205	-0.0522	-0.7802
88	SLV 8	-0.03754	1.29905	-0.05941	-0.6205	-0.0522	-0.7802
88	SLV 9	0.10982	-1.29888	0.03254	0.6264	-0.0188	0.7781
88	SLV 10	0.10982	-1.29888	0.03254	0.6264	-0.0188	0.7781

Nodo	Cont.	Spostamento			Rotazione		
Ind.	N.br.	ux	uy	uz	rx	ry	rz
88	SLV 11	0.10982	1.29905	0.03254	-0.6205	-0.0188	-0.7802
88	SLV 12	0.10982	1.29905	0.03254	-0.6205	-0.0188	-0.7802
88	SLV 13	0.28173	-0.38961	0.13983	0.1899	0.0201	0.2327
88	SLV 14	0.28173	-0.38961	0.13983	0.1899	0.0201	0.2327
88	SLV 15	0.28173	0.38977	0.13983	-0.1841	0.0201	-0.2348
88	SLV 16	0.28173	0.38977	0.13983	-0.1841	0.0201	-0.2348
89	SLU 1	-0.0363	0.0001	-0.01475	0.0087	0.0351	0.0033
89	SLU 2	-0.0363	0.0001	-0.01475	0.0087	0.0351	0.0033
89	SLU 3	-0.03781	0.00011	-0.01451	0.0088	0.0363	0.0034
89	SLU 4	-0.04008	0.00013	-0.01414	0.009	0.0379	0.0034
89	SLU 5	-0.04008	0.00013	-0.01414	0.009	0.0379	0.0035
89	SLU 6	-0.03865	0.0001	-0.01487	0.009	0.0373	0.0035
89	SLU 7	-0.04016	0.00011	-0.01463	0.0091	0.0384	0.0035
89	SLU 8	-0.04243	0.00013	-0.01426	0.0093	0.04	0.0036
89	SLU 9	-0.04243	0.00013	-0.01426	0.0093	0.04	0.0036
89	SLU 10	-0.041	0.00011	-0.01499	0.0093	0.0394	0.0036
89	SLU 11	-0.041	0.00011	-0.01499	0.0093	0.0394	0.0036
89	SLU 12	-0.04251	0.00012	-0.01475	0.0094	0.0405	0.0036
89	SLU 13	-0.04251	0.00012	-0.01475	0.0094	0.0405	0.0036
89	SLU 14	-0.03808	0	-0.01529	0.0092	0.0371	0.0035
89	SLU 15	-0.03959	0.00001	-0.01505	0.0093	0.0382	0.0036
89	SLU 16	-0.04186	0.00003	-0.01468	0.0095	0.0399	0.0036
89	SLU 17	-0.04186	0.00003	-0.01468	0.0095	0.0399	0.0036
89	SLU 18	-0.04043	0	-0.01541	0.0095	0.0392	0.0036
89	SLU 19	-0.04194	0.00001	-0.01517	0.0096	0.0403	0.0037
89	SLU 20	-0.04421	0.00003	-0.0148	0.0098	0.042	0.0037
89	SLU 21	-0.04421	0.00003	-0.0148	0.0098	0.042	0.0037
89	SLU 22	-0.04278	0.00001	-0.01553	0.0098	0.0413	0.0037
89	SLU 23	-0.04278	0.00001	-0.01553	0.0098	0.0413	0.0037
89	SLU 24	-0.04429	0.00002	-0.01529	0.0099	0.0424	0.0038
89	SLU 25	-0.04429	0.00002	-0.01529	0.0099	0.0424	0.0038
89	SLU 26	-0.04074	-0.00015	-0.0161	0.0099	0.0401	0.0037
89	SLU 27	-0.04074	-0.00015	-0.0161	0.01	0.0401	0.0038
89	SLU 28	-0.04226	-0.00014	-0.01586	0.0101	0.0412	0.0038
89	SLU 29	-0.04226	-0.00014	-0.01586	0.0101	0.0412	0.0038
89	SLU 30	-0.04309	-0.00014	-0.01622	0.0102	0.0422	0.0039
89	SLU 31	-0.04309	-0.00015	-0.01622	0.0103	0.0422	0.0039
89	SLU 32	-0.04461	-0.00013	-0.01598	0.0104	0.0433	0.0039
89	SLU 33	-0.04461	-0.00014	-0.01598	0.0104	0.0433	0.0039
89	SLU 34	-0.0363	0.0001	-0.01475	0.0087	0.0351	0.0033
89	SLU 35	-0.0363	0.0001	-0.01475	0.0087	0.0351	0.0033
89	SLU 36	-0.03781	0.00011	-0.01451	0.0088	0.0363	0.0034
89	SLU 37	-0.04008	0.00013	-0.01414	0.009	0.0379	0.0034
89	SLU 38	-0.04008	0.00013	-0.01414	0.009	0.0379	0.0035
89	SLU 39	-0.03865	0.0001	-0.01487	0.009	0.0373	0.0035
89	SLU 40	-0.04016	0.00011	-0.01463	0.0091	0.0384	0.0035
89	SLU 41	-0.04243	0.00013	-0.01426	0.0093	0.04	0.0036
89	SLU 42	-0.04243	0.00013	-0.01426	0.0093	0.04	0.0036
89	SLU 43	-0.041	0.00011	-0.01499	0.0093	0.0394	0.0036
89	SLU 44	-0.041	0.00011	-0.01499	0.0093	0.0394	0.0036
89	SLU 45	-0.04251	0.00012	-0.01475	0.0094	0.0405	0.0036
89	SLU 46	-0.04251	0.00012	-0.01475	0.0094	0.0405	0.0036
89	SLU 47	-0.03808	0	-0.01529	0.0092	0.0371	0.0035
89	SLU 48	-0.03959	0.00001	-0.01505	0.0093	0.0382	0.0036
89	SLU 49	-0.04186	0.00003	-0.01468	0.0095	0.0399	0.0036
89	SLU 50	-0.04186	0.00003	-0.01468	0.0095	0.0399	0.0036
89	SLU 51	-0.04043	0	-0.01541	0.0095	0.0392	0.0036
89	SLU 52	-0.04194	0.00001	-0.01517	0.0096	0.0403	0.0037
89	SLU 53	-0.04421	0.00003	-0.0148	0.0098	0.042	0.0037
89	SLU 54	-0.04421	0.00003	-0.0148	0.0098	0.042	0.0037
89	SLU 55	-0.04278	0.00001	-0.01553	0.0098	0.0413	0.0037
89	SLU 56	-0.04278	0.00001	-0.01553	0.0098	0.0413	0.0037
89	SLU 57	-0.04429	0.00002	-0.01529	0.0099	0.0424	0.0038
89	SLU 58	-0.04429	0.00002	-0.01529	0.0099	0.0424	0.0038
89	SLU 59	-0.04074	-0.00015	-0.0161	0.0099	0.0401	0.0037
89	SLU 60	-0.04074	-0.00015	-0.0161	0.01	0.0401	0.0038
89	SLU 61	-0.04226	-0.00014	-0.01586	0.0101	0.0412	0.0038
89	SLU 62	-0.04226	-0.00014	-0.01586	0.0101	0.0412	0.0038
89	SLU 63	-0.04309	-0.00014	-0.01622	0.0102	0.0422	0.0039
89	SLU 64	-0.04309	-0.00015	-0.01622	0.0103	0.0422	0.0039
89	SLU 65	-0.04461	-0.00013	-0.01598	0.0104	0.0433	0.0039
89	SLU 66	-0.04461	-0.00014	-0.01598	0.0104	0.0433	0.0039
89	SLU 67	-0.04719	0.00013	-0.01918	0.0113	0.0457	0.0043
89	SLU 68	-0.04719	0.00013	-0.01918	0.0113	0.0457	0.0043
89	SLU 69	-0.0487	0.00014	-0.01893	0.0115	0.0468	0.0044
89	SLU 70	-0.05097	0.00016	-0.01857	0.0116	0.0484	0.0045
89	SLU 71	-0.05097	0.00016	-0.01857	0.0116	0.0484	0.0045
89	SLU 72	-0.04954	0.00013	-0.0193	0.0116	0.0478	0.0045
89	SLU 73	-0.05105	0.00014	-0.01905	0.0118	0.0489	0.0045
89	SLU 74	-0.05332	0.00016	-0.01869	0.0119	0.0506	0.0046
89	SLU 75	-0.05332	0.00016	-0.01869	0.0119	0.0506	0.0046
89	SLU 76	-0.05189	0.00014	-0.01941	0.0119	0.0499	0.0046
89	SLU 77	-0.05189	0.00014	-0.01941	0.012	0.0499	0.0046
89	SLU 78	-0.0534	0.00015	-0.01917	0.0121	0.051	0.0046
89	SLU 79	-0.0534	0.00015	-0.01917	0.0121	0.051	0.0046
89	SLU 80	-0.04896	0.00003	-0.01972	0.0118	0.0477	0.0045
89	SLU 81	-0.05048	0.00004	-0.01947	0.0119	0.0488	0.0046
89	SLU 82	-0.05275	0.00006	-0.01911	0.0121	0.0504	0.0046
89	SLU 83	-0.05275	0.00006	-0.01911	0.0121	0.0504	0.0046
89	SLU 84	-0.05131	0.00003	-0.01984	0.0121	0.0498	0.0046
89	SLU 85	-0.05283	0.00004	-0.01959	0.0122	0.0509	0.0047
89	SLU 86	-0.0551	0.00006	-0.01923	0.0124	0.0525	0.0047
89	SLU 87	-0.0551	0.00006	-0.01923	0.0124	0.0525	0.0047
89	SLU 88	-0.05366	0.00004	-0.01995	0.0124	0.0519	0.0047
89	SLU 89	-0.05366	0.00004	-0.01995	0.0124	0.0519	0.0047

Nodo	Cont.	Spostamento			Rotazione		
Ind.	N.br.	ux	uy	uz	rx	ry	rz
89	SLU 90	-0.05518	0.00005	-0.01971	0.0125	0.053	0.0048
89	SLU 91	-0.05518	0.00005	-0.01971	0.0126	0.053	0.0048
89	SLU 92	-0.05163	-0.00012	-0.02053	0.0126	0.0506	0.0047
89	SLU 93	-0.05163	-0.00012	-0.02053	0.0126	0.0506	0.0048
89	SLU 94	-0.05315	-0.00011	-0.02028	0.0127	0.0517	0.0048
89	SLU 95	-0.05315	-0.00011	-0.02028	0.0127	0.0517	0.0048
89	SLU 96	-0.05398	-0.00011	-0.02065	0.0129	0.0527	0.0049
89	SLU 97	-0.05398	-0.00012	-0.02065	0.0129	0.0527	0.0049
89	SLU 98	-0.0555	-0.0001	-0.0204	0.013	0.0538	0.0049
89	SLU 99	-0.0555	-0.00011	-0.0204	0.013	0.0538	0.0049
89	SLU 100	-0.04719	0.00013	-0.01918	0.0113	0.0457	0.0043
89	SLU 101	-0.04719	0.00013	-0.01918	0.0113	0.0457	0.0043
89	SLU 102	-0.0487	0.00014	-0.01893	0.0115	0.0468	0.0044
89	SLU 103	-0.05097	0.00016	-0.01857	0.0116	0.0484	0.0045
89	SLU 104	-0.05097	0.00016	-0.01857	0.0116	0.0484	0.0045
89	SLU 105	-0.04954	0.00013	-0.0193	0.0116	0.0478	0.0045
89	SLU 106	-0.05105	0.00014	-0.01905	0.0118	0.0489	0.0045
89	SLU 107	-0.05332	0.00016	-0.01869	0.0119	0.0506	0.0046
89	SLU 108	-0.05332	0.00016	-0.01869	0.0119	0.0506	0.0046
89	SLU 109	-0.05189	0.00014	-0.01941	0.0119	0.0499	0.0046
89	SLU 110	-0.05189	0.00014	-0.01941	0.012	0.0499	0.0046
89	SLU 111	-0.0534	0.00015	-0.01917	0.0121	0.051	0.0046
89	SLU 112	-0.0534	0.00015	-0.01917	0.0121	0.051	0.0046
89	SLU 113	-0.04896	0.00003	-0.01972	0.0118	0.0477	0.0045
89	SLU 114	-0.05048	0.00004	-0.01947	0.0119	0.0488	0.0046
89	SLU 115	-0.05275	0.00006	-0.01911	0.0121	0.0504	0.0046
89	SLU 116	-0.05275	0.00006	-0.01911	0.0121	0.0504	0.0046
89	SLU 117	-0.05131	0.00003	-0.01984	0.0121	0.0498	0.0046
89	SLU 118	-0.05283	0.00004	-0.01959	0.0122	0.0509	0.0047
89	SLU 119	-0.0551	0.00006	-0.01923	0.0124	0.0525	0.0047
89	SLU 120	-0.0551	0.00006	-0.01923	0.0124	0.0525	0.0047
89	SLU 121	-0.05366	0.00004	-0.01995	0.0124	0.0519	0.0047
89	SLU 122	-0.05366	0.00004	-0.01995	0.0124	0.0519	0.0047
89	SLU 123	-0.05518	0.00005	-0.01971	0.0125	0.053	0.0048
89	SLU 124	-0.05518	0.00005	-0.01971	0.0126	0.053	0.0048
89	SLU 125	-0.05163	-0.00012	-0.02053	0.0126	0.0506	0.0047
89	SLU 126	-0.05163	-0.00012	-0.02053	0.0126	0.0506	0.0048
89	SLU 127	-0.05315	-0.00011	-0.02028	0.0127	0.0517	0.0048
89	SLU 128	-0.05315	-0.00011	-0.02028	0.0127	0.0517	0.0048
89	SLU 129	-0.05398	-0.00011	-0.02065	0.0129	0.0527	0.0049
89	SLU 130	-0.05398	-0.00012	-0.02065	0.0129	0.0527	0.0049
89	SLU 131	-0.0555	-0.0001	-0.0204	0.013	0.0538	0.0049
89	SLU 132	-0.0555	-0.00011	-0.0204	0.013	0.0538	0.0049
89	SLE RA 1	-0.0363	0.0001	-0.01475	0.0087	0.0351	0.0033
89	SLE RA 2	-0.0363	0.0001	-0.01475	0.0087	0.0351	0.0033
89	SLE RA 3	-0.03731	0.00011	-0.01459	0.0088	0.0359	0.0034
89	SLE RA 4	-0.03882	0.00012	-0.01435	0.0089	0.037	0.0034
89	SLE RA 5	-0.03882	0.00012	-0.01435	0.0089	0.037	0.0034
89	SLE RA 6	-0.03786	0.0001	-0.01483	0.0089	0.0366	0.0034
89	SLE RA 7	-0.03887	0.00011	-0.01467	0.009	0.0373	0.0035
89	SLE RA 8	-0.04039	0.00012	-0.01443	0.0091	0.0384	0.0035
89	SLE RA 9	-0.04039	0.00012	-0.01443	0.0091	0.0384	0.0035
89	SLE RA 10	-0.03943	0.00011	-0.01491	0.0091	0.038	0.0035
89	SLE RA 11	-0.03943	0.00011	-0.01491	0.0091	0.038	0.0035
89	SLE RA 12	-0.04044	0.00011	-0.01475	0.0092	0.0387	0.0035
89	SLE RA 13	-0.04044	0.00011	-0.01475	0.0092	0.0387	0.0035
89	SLE RA 14	-0.03748	0.00003	-0.01511	0.0091	0.0365	0.0035
89	SLE RA 15	-0.03849	0.00004	-0.01495	0.0091	0.0372	0.0035
89	SLE RA 16	-0.04001	0.00005	-0.01471	0.0092	0.0383	0.0035
89	SLE RA 17	-0.04001	0.00005	-0.01471	0.0092	0.0383	0.0035
89	SLE RA 18	-0.03905	0.00004	-0.01519	0.0093	0.0379	0.0035
89	SLE RA 19	-0.04006	0.00004	-0.01503	0.0093	0.0386	0.0036
89	SLE RA 20	-0.04157	0.00006	-0.01479	0.0094	0.0397	0.0036
89	SLE RA 21	-0.04157	0.00005	-0.01479	0.0094	0.0397	0.0036
89	SLE RA 22	-0.04062	0.00004	-0.01527	0.0094	0.0393	0.0036
89	SLE RA 23	-0.04062	0.00004	-0.01527	0.0095	0.0393	0.0036
89	SLE RA 24	-0.04163	0.00005	-0.01511	0.0095	0.04	0.0036
89	SLE RA 25	-0.04163	0.00005	-0.01511	0.0095	0.04	0.0036
89	SLE RA 26	-0.03926	-0.00006	-0.01565	0.0095	0.0384	0.0036
89	SLE RA 27	-0.03926	-0.00007	-0.01565	0.0095	0.0384	0.0036
89	SLE RA 28	-0.04027	-0.00006	-0.01549	0.0096	0.0392	0.0036
89	SLE RA 29	-0.04027	-0.00006	-0.01549	0.0096	0.0392	0.0036
89	SLE RA 30	-0.04083	-0.00006	-0.01573	0.0097	0.0398	0.0037
89	SLE RA 31	-0.04083	-0.00006	-0.01573	0.0097	0.0398	0.0037
89	SLE RA 32	-0.04184	-0.00005	-0.01557	0.0098	0.0406	0.0037
89	SLE RA 33	-0.04184	-0.00006	-0.01557	0.0098	0.0406	0.0037
89	SLE FR 1	-0.0363	0.0001	-0.01475	0.0087	0.0351	0.0033
89	SLE FR 2	-0.0363	0.0001	-0.01475	0.0087	0.0351	0.0033
89	SLE FR 3	-0.03731	0.00011	-0.01459	0.0088	0.0359	0.0034
89	SLE FR 4	-0.03692	0.0001	-0.01478	0.0088	0.0357	0.0034
89	SLE FR 5	-0.03748	0.00004	-0.01511	0.009	0.0365	0.0034
89	SLE QP 1	-0.0363	0.0001	-0.01475	0.0087	0.0351	0.0033
89	SLO 1	-0.16785	-0.1598	0.06738	0.0854	0.0054	-0.0926
89	SLO 2	-0.16785	-0.1598	0.06738	0.0854	0.0054	-0.0926
89	SLO 3	-0.16786	0.16001	0.06734	-0.068	0.0054	0.0992
89	SLO 4	-0.16786	0.16001	0.06734	-0.068	0.0054	0.0992
89	SLO 5	-0.07575	-0.53292	0.00996	0.2644	0.0262	-0.3164
89	SLO 6	-0.07575	-0.53292	0.00996	0.2644	0.0262	-0.3164
89	SLO 7	-0.07579	0.53312	0.00981	-0.247	0.0262	0.323
89	SLO 8	-0.07579	0.53312	0.00981	-0.247	0.0262	0.323
89	SLO 9	0.00319	-0.53292	-0.03931	0.2644	0.0441	-0.3164
89	SLO 10	0.00319	-0.53292	-0.03931	0.2644	0.0441	-0.3164
89	SLO 11	0.00315	0.53312	-0.03946	-0.2469	0.0441	0.323
89	SLO 12	0.00315	0.53312	-0.03946	-0.2469	0.0441	0.323
89	SLO 13	0.09527	-0.1598	-0.09684	0.0855	0.0649	-0.0926

Nodo	Cont.	Spostamento			Rotazione		
Ind.	N.br.	ux	uy	uz	rx	ry	rz
89	SLO 14	0.09527	-0.1598	-0.09684	0.0855	0.0649	-0.0926
89	SLO 15	0.09526	0.16001	-0.09688	-0.0679	0.0649	0.0993
89	SLO 16	0.09526	0.16001	-0.09688	-0.0679	0.0649	0.0993
89	SLD 1	-0.14424	-0.14765	0.05264	0.0795	0.0107	-0.0853
89	SLD 2	-0.14424	-0.14765	0.05264	0.0795	0.0107	-0.0853
89	SLD 3	-0.14425	0.14785	0.0526	-0.0622	0.0107	0.0919
89	SLD 4	-0.14425	0.14785	0.0526	-0.0622	0.0107	0.0919
89	SLD 5	-0.06866	-0.4924	0.00553	0.2449	0.0278	-0.2921
89	SLD 6	-0.06866	-0.4924	0.00553	0.2449	0.0278	-0.2921
89	SLD 7	-0.0687	0.49261	0.00539	-0.2275	0.0278	0.2987
89	SLD 8	-0.0687	0.49261	0.00539	-0.2275	0.0278	0.2987
89	SLD 9	-0.00389	-0.4924	-0.03489	0.245	0.0425	-0.2921
89	SLD 10	-0.00389	-0.4924	-0.03489	0.245	0.0425	-0.2921
89	SLD 11	-0.00393	0.49261	-0.03503	-0.2275	0.0425	0.2987
89	SLD 12	-0.00393	0.49261	-0.03503	-0.2275	0.0425	0.2987
89	SLD 13	0.07166	-0.14765	-0.0821	0.0796	0.0596	-0.0853
89	SLD 14	0.07166	-0.14765	-0.0821	0.0796	0.0596	-0.0853
89	SLD 15	0.07165	0.14785	-0.08215	-0.0621	0.0596	0.092
89	SLD 16	0.07165	0.14785	-0.08215	-0.0621	0.0596	0.092
89	SLV 1	-0.27744	-0.38959	0.13582	0.1955	-0.0194	-0.2304
89	SLV 2	-0.27744	-0.38959	0.13582	0.1955	-0.0194	-0.2304
89	SLV 3	-0.27747	0.3898	0.13571	-0.1783	-0.0194	0.237
89	SLV 4	-0.27747	0.3898	0.13571	-0.1783	-0.0194	0.237
89	SLV 5	-0.1086	-1.29888	0.03059	0.6318	0.0188	-0.7758
89	SLV 6	-0.1086	-1.29888	0.03059	0.6318	0.0188	-0.7758
89	SLV 7	-0.10869	1.29909	0.03022	-0.6144	0.0188	0.7824
89	SLV 8	-0.10869	1.29909	0.03022	-0.6144	0.0188	0.7824
89	SLV 9	0.0361	-1.29888	-0.05972	0.6318	0.0515	-0.7758
89	SLV 10	0.0361	-1.29888	-0.05972	0.6318	0.0515	-0.7758
89	SLV 11	0.036	1.29909	-0.06009	-0.6143	0.0515	0.7825
89	SLV 12	0.036	1.29909	-0.06009	-0.6143	0.0515	0.7825
89	SLV 13	0.20488	-0.38959	-0.16521	0.1957	0.0897	-0.2304
89	SLV 14	0.20488	-0.38959	-0.16521	0.1957	0.0897	-0.2304
89	SLV 15	0.20485	0.3898	-0.16532	-0.1781	0.0897	0.2371
89	SLV 16	0.20485	0.3898	-0.16532	-0.1781	0.0897	0.2371
90	SLU 1	0.0363	0.0001	-0.01475	0.0087	-0.0351	-0.0033
90	SLU 2	0.0363	0.0001	-0.01475	0.0087	-0.0351	-0.0033
90	SLU 3	0.03781	0.00011	-0.01451	0.0088	-0.0363	-0.0034
90	SLU 4	0.04008	0.00013	-0.01414	0.009	-0.0379	-0.0034
90	SLU 5	0.04008	0.00013	-0.01414	0.009	-0.0379	-0.0035
90	SLU 6	0.03887	0.0001	-0.01472	0.009	-0.0372	-0.0035
90	SLU 7	0.04038	0.00011	-0.01448	0.0091	-0.0383	-0.0035
90	SLU 8	0.04266	0.00013	-0.01412	0.0093	-0.04	-0.0036
90	SLU 9	0.04266	0.00013	-0.01412	0.0093	-0.04	-0.0036
90	SLU 10	0.04144	0.00011	-0.01469	0.0093	-0.0392	-0.0036
90	SLU 11	0.04144	0.00011	-0.01469	0.0093	-0.0392	-0.0036
90	SLU 12	0.04295	0.00012	-0.01445	0.0094	-0.0404	-0.0036
90	SLU 13	0.04295	0.00012	-0.01445	0.0094	-0.0404	-0.0036
90	SLU 14	0.03844	0	-0.01505	0.0092	-0.037	-0.0035
90	SLU 15	0.03996	0.00001	-0.0148	0.0093	-0.0381	-0.0036
90	SLU 16	0.04223	0.00003	-0.01444	0.0095	-0.0398	-0.0036
90	SLU 17	0.04223	0.00003	-0.01444	0.0095	-0.0398	-0.0036
90	SLU 18	0.04101	0	-0.01502	0.0095	-0.0391	-0.0036
90	SLU 19	0.04253	0.00001	-0.01477	0.0096	-0.0402	-0.0037
90	SLU 20	0.0448	0.00003	-0.01441	0.0098	-0.0418	-0.0037
90	SLU 21	0.0448	0.00003	-0.01441	0.0098	-0.0418	-0.0037
90	SLU 22	0.04359	0.00001	-0.01499	0.0098	-0.0411	-0.0037
90	SLU 23	0.04359	0.00001	-0.01499	0.0098	-0.0411	-0.0037
90	SLU 24	0.0451	0.00002	-0.01474	0.0099	-0.0422	-0.0038
90	SLU 25	0.0451	0.00002	-0.01474	0.0099	-0.0422	-0.0038
90	SLU 26	0.04166	-0.00015	-0.01549	0.0099	-0.0398	-0.0037
90	SLU 27	0.04166	-0.00015	-0.01549	0.0099	-0.0398	-0.0037
90	SLU 28	0.04318	-0.00014	-0.01524	0.01	-0.0409	-0.0038
90	SLU 29	0.04318	-0.00014	-0.01524	0.0101	-0.0409	-0.0038
90	SLU 30	0.04423	-0.00014	-0.01546	0.0102	-0.0419	-0.0039
90	SLU 31	0.04423	-0.00015	-0.01546	0.0102	-0.0419	-0.0039
90	SLU 32	0.04575	-0.00013	-0.01522	0.0103	-0.043	-0.0039
90	SLU 33	0.04575	-0.00014	-0.01522	0.0104	-0.043	-0.0039
90	SLU 34	0.0363	0.0001	-0.01475	0.0087	-0.0351	-0.0033
90	SLU 35	0.0363	0.0001	-0.01475	0.0087	-0.0351	-0.0033
90	SLU 36	0.03781	0.00011	-0.01451	0.0088	-0.0363	-0.0034
90	SLU 37	0.04008	0.00013	-0.01414	0.009	-0.0379	-0.0034
90	SLU 38	0.04008	0.00013	-0.01414	0.009	-0.0379	-0.0035
90	SLU 39	0.03887	0.0001	-0.01472	0.009	-0.0372	-0.0035
90	SLU 40	0.04038	0.00011	-0.01448	0.0091	-0.0383	-0.0035
90	SLU 41	0.04266	0.00013	-0.01412	0.0093	-0.04	-0.0036
90	SLU 42	0.04266	0.00013	-0.01412	0.0093	-0.04	-0.0036
90	SLU 43	0.04144	0.00011	-0.01469	0.0093	-0.0392	-0.0036
90	SLU 44	0.04144	0.00011	-0.01469	0.0093	-0.0392	-0.0036
90	SLU 45	0.04295	0.00012	-0.01445	0.0094	-0.0404	-0.0036
90	SLU 46	0.04295	0.00012	-0.01445	0.0094	-0.0404	-0.0036
90	SLU 47	0.03844	0	-0.01505	0.0092	-0.037	-0.0035
90	SLU 48	0.03996	0.00001	-0.0148	0.0093	-0.0381	-0.0036
90	SLU 49	0.04223	0.00003	-0.01444	0.0095	-0.0398	-0.0036
90	SLU 50	0.04223	0.00003	-0.01444	0.0095	-0.0398	-0.0036
90	SLU 51	0.04101	0	-0.01502	0.0095	-0.0391	-0.0036
90	SLU 52	0.04253	0.00001	-0.01477	0.0096	-0.0402	-0.0037
90	SLU 53	0.0448	0.00003	-0.01441	0.0098	-0.0418	-0.0037
90	SLU 54	0.0448	0.00003	-0.01441	0.0098	-0.0418	-0.0037
90	SLU 55	0.04359	0.00001	-0.01499	0.0098	-0.0411	-0.0037
90	SLU 56	0.04359	0.00001	-0.01499	0.0098	-0.0411	-0.0037
90	SLU 57	0.0451	0.00002	-0.01474	0.0099	-0.0422	-0.0038
90	SLU 58	0.0451	0.00002	-0.01474	0.0099	-0.0422	-0.0038
90	SLU 59	0.04166	-0.00015	-0.01549	0.0099	-0.0398	-0.0037
90	SLU 60	0.04166	-0.00015	-0.01549	0.0099	-0.0398	-0.0037

Nodo	Cont.	Spostamento			Rotazione		
Ind.	N.br.	ux	uy	uz	rx	ry	rz
90	SLU 61	0.04318	-0.00014	-0.01524	0.01	-0.0409	-0.0038
90	SLU 62	0.04318	-0.00014	-0.01524	0.0101	-0.0409	-0.0038
90	SLU 63	0.04423	-0.00014	-0.01546	0.0102	-0.0419	-0.0039
90	SLU 64	0.04423	-0.00015	-0.01546	0.0102	-0.0419	-0.0039
90	SLU 65	0.04575	-0.00013	-0.01522	0.0103	-0.043	-0.0039
90	SLU 66	0.04575	-0.00014	-0.01522	0.0104	-0.043	-0.0039
90	SLU 67	0.04719	0.00013	-0.01918	0.0113	-0.0457	-0.0043
90	SLU 68	0.04719	0.00013	-0.01918	0.0113	-0.0457	-0.0043
90	SLU 69	0.0487	0.00014	-0.01893	0.0115	-0.0468	-0.0044
90	SLU 70	0.05097	0.00016	-0.01857	0.0116	-0.0484	-0.0045
90	SLU 71	0.05097	0.00016	-0.01857	0.0116	-0.0484	-0.0045
90	SLU 72	0.04976	0.00013	-0.01915	0.0116	-0.0477	-0.0045
90	SLU 73	0.05127	0.00014	-0.0189	0.0118	-0.0488	-0.0045
90	SLU 74	0.05354	0.00016	-0.01854	0.0119	-0.0505	-0.0046
90	SLU 75	0.05354	0.00016	-0.01854	0.0119	-0.0505	-0.0046
90	SLU 76	0.05233	0.00014	-0.01912	0.0119	-0.0498	-0.0046
90	SLU 77	0.05233	0.00014	-0.01912	0.0119	-0.0498	-0.0046
90	SLU 78	0.05384	0.00015	-0.01888	0.012	-0.0509	-0.0046
90	SLU 79	0.05384	0.00015	-0.01888	0.0121	-0.0509	-0.0046
90	SLU 80	0.04933	0.00003	-0.01947	0.0118	-0.0476	-0.0045
90	SLU 81	0.05085	0.00004	-0.01923	0.0119	-0.0487	-0.0046
90	SLU 82	0.05312	0.00006	-0.01886	0.0121	-0.0503	-0.0046
90	SLU 83	0.05312	0.00006	-0.01886	0.0121	-0.0503	-0.0046
90	SLU 84	0.0519	0.00003	-0.01944	0.0121	-0.0496	-0.0046
90	SLU 85	0.05342	0.00004	-0.0192	0.0122	-0.0507	-0.0047
90	SLU 86	0.05569	0.00006	-0.01884	0.0124	-0.0524	-0.0047
90	SLU 87	0.05569	0.00006	-0.01884	0.0124	-0.0524	-0.0047
90	SLU 88	0.05448	0.00004	-0.01941	0.0124	-0.0517	-0.0047
90	SLU 89	0.05448	0.00004	-0.01941	0.0124	-0.0517	-0.0047
90	SLU 90	0.05599	0.00005	-0.01917	0.0125	-0.0528	-0.0048
90	SLU 91	0.05599	0.00005	-0.01917	0.0125	-0.0528	-0.0048
90	SLU 92	0.05255	-0.00012	-0.01991	0.0125	-0.0503	-0.0047
90	SLU 93	0.05255	-0.00012	-0.01991	0.0126	-0.0503	-0.0048
90	SLU 94	0.05407	-0.00011	-0.01967	0.0127	-0.0514	-0.0048
90	SLU 95	0.05407	-0.00011	-0.01967	0.0127	-0.0514	-0.0048
90	SLU 96	0.05512	-0.00011	-0.01988	0.0128	-0.0524	-0.0049
90	SLU 97	0.05512	-0.00012	-0.01988	0.0129	-0.0524	-0.0049
90	SLU 98	0.05664	-0.0001	-0.01964	0.013	-0.0535	-0.0049
90	SLU 99	0.05664	-0.00011	-0.01964	0.013	-0.0535	-0.0049
90	SLU 100	0.04719	0.00013	-0.01918	0.0113	-0.0457	-0.0043
90	SLU 101	0.04719	0.00013	-0.01918	0.0113	-0.0457	-0.0043
90	SLU 102	0.0487	0.00014	-0.01893	0.0115	-0.0468	-0.0044
90	SLU 103	0.05097	0.00016	-0.01857	0.0116	-0.0484	-0.0045
90	SLU 104	0.05097	0.00016	-0.01857	0.0116	-0.0484	-0.0045
90	SLU 105	0.04976	0.00013	-0.01915	0.0116	-0.0477	-0.0045
90	SLU 106	0.05127	0.00014	-0.0189	0.0118	-0.0488	-0.0045
90	SLU 107	0.05354	0.00016	-0.01854	0.0119	-0.0505	-0.0046
90	SLU 108	0.05354	0.00016	-0.01854	0.0119	-0.0505	-0.0046
90	SLU 109	0.05233	0.00014	-0.01912	0.0119	-0.0498	-0.0046
90	SLU 110	0.05233	0.00014	-0.01912	0.0119	-0.0498	-0.0046
90	SLU 111	0.05384	0.00015	-0.01888	0.012	-0.0509	-0.0046
90	SLU 112	0.05384	0.00015	-0.01888	0.0121	-0.0509	-0.0046
90	SLU 113	0.04933	0.00003	-0.01947	0.0118	-0.0476	-0.0045
90	SLU 114	0.05085	0.00004	-0.01923	0.0119	-0.0487	-0.0046
90	SLU 115	0.05312	0.00006	-0.01886	0.0121	-0.0503	-0.0046
90	SLU 116	0.05312	0.00006	-0.01886	0.0121	-0.0503	-0.0046
90	SLU 117	0.0519	0.00003	-0.01944	0.0121	-0.0496	-0.0046
90	SLU 118	0.05342	0.00004	-0.0192	0.0122	-0.0507	-0.0047
90	SLU 119	0.05569	0.00006	-0.01884	0.0124	-0.0524	-0.0047
90	SLU 120	0.05569	0.00006	-0.01884	0.0124	-0.0524	-0.0047
90	SLU 121	0.05448	0.00004	-0.01941	0.0124	-0.0517	-0.0047
90	SLU 122	0.05448	0.00004	-0.01941	0.0124	-0.0517	-0.0047
90	SLU 123	0.05599	0.00005	-0.01917	0.0125	-0.0528	-0.0048
90	SLU 124	0.05599	0.00005	-0.01917	0.0125	-0.0528	-0.0048
90	SLU 125	0.05255	-0.00012	-0.01991	0.0125	-0.0503	-0.0047
90	SLU 126	0.05255	-0.00012	-0.01991	0.0126	-0.0503	-0.0048
90	SLU 127	0.05407	-0.00011	-0.01967	0.0127	-0.0514	-0.0048
90	SLU 128	0.05407	-0.00011	-0.01967	0.0127	-0.0514	-0.0048
90	SLU 129	0.05512	-0.00011	-0.01988	0.0128	-0.0524	-0.0049
90	SLU 130	0.05512	-0.00012	-0.01988	0.0129	-0.0524	-0.0049
90	SLU 131	0.05664	-0.0001	-0.01964	0.013	-0.0535	-0.0049
90	SLU 132	0.05664	-0.00011	-0.01964	0.013	-0.0535	-0.0049
90	SLE RA 1	0.0363	0.0001	-0.01475	0.0087	-0.0351	-0.0033
90	SLE RA 2	0.0363	0.0001	-0.01475	0.0087	-0.0351	-0.0033
90	SLE RA 3	0.03731	0.00011	-0.01459	0.0088	-0.0359	-0.0034
90	SLE RA 4	0.03882	0.00012	-0.01435	0.0089	-0.037	-0.0034
90	SLE RA 5	0.03882	0.00012	-0.01435	0.0089	-0.037	-0.0034
90	SLE RA 6	0.03801	0.0001	-0.01473	0.0089	-0.0365	-0.0034
90	SLE RA 7	0.03902	0.00011	-0.01457	0.009	-0.0373	-0.0035
90	SLE RA 8	0.04054	0.00012	-0.01433	0.0091	-0.0384	-0.0035
90	SLE RA 9	0.04054	0.00012	-0.01433	0.0091	-0.0384	-0.0035
90	SLE RA 10	0.03973	0.00011	-0.01471	0.0091	-0.0379	-0.0035
90	SLE RA 11	0.03973	0.00011	-0.01471	0.0091	-0.0379	-0.0035
90	SLE RA 12	0.04074	0.00011	-0.01455	0.0092	-0.0386	-0.0035
90	SLE RA 13	0.04074	0.00011	-0.01455	0.0092	-0.0386	-0.0035
90	SLE RA 14	0.03773	0.00003	-0.01495	0.009	-0.0364	-0.0035
90	SLE RA 15	0.03874	0.00004	-0.01479	0.0091	-0.0371	-0.0035
90	SLE RA 16	0.04025	0.00005	-0.01454	0.0092	-0.0382	-0.0035
90	SLE RA 17	0.04025	0.00005	-0.01454	0.0092	-0.0382	-0.0035
90	SLE RA 18	0.03944	0.00004	-0.01493	0.0092	-0.0378	-0.0035
90	SLE RA 19	0.04045	0.00004	-0.01477	0.0093	-0.0385	-0.0036
90	SLE RA 20	0.04197	0.00006	-0.01452	0.0094	-0.0396	-0.0036
90	SLE RA 21	0.04197	0.00005	-0.01452	0.0094	-0.0396	-0.0036
90	SLE RA 22	0.04116	0.00004	-0.01491	0.0094	-0.0391	-0.0036
90	SLE RA 23	0.04116	0.00004	-0.01491	0.0094	-0.0391	-0.0036

Nodo	Cont.	Spostamento			Rotazione		
Ind.	N.br.	ux	uy	uz	rx	ry	rz
90	SLE RA 24	0.04217	0.00005	-0.01475	0.0095	-0.0399	-0.0036
90	SLE RA 25	0.04217	0.00005	-0.01475	0.0095	-0.0399	-0.0036
90	SLE RA 26	0.03987	-0.00006	-0.01524	0.0095	-0.0383	-0.0036
90	SLE RA 27	0.03987	-0.00007	-0.01524	0.0095	-0.0383	-0.0036
90	SLE RA 28	0.04088	-0.00006	-0.01508	0.0096	-0.039	-0.0036
90	SLE RA 29	0.04088	-0.00006	-0.01508	0.0096	-0.039	-0.0036
90	SLE RA 30	0.04159	-0.00006	-0.01522	0.0097	-0.0396	-0.0037
90	SLE RA 31	0.04159	-0.00006	-0.01522	0.0097	-0.0396	-0.0037
90	SLE RA 32	0.0426	-0.00006	-0.01506	0.0098	-0.0404	-0.0037
90	SLE RA 33	0.0426	-0.00006	-0.01506	0.0098	-0.0404	-0.0037
90	SLE FR 1	0.0363	0.0001	-0.01475	0.0087	-0.0351	-0.0033
90	SLE FR 2	0.0363	0.0001	-0.01475	0.0087	-0.0351	-0.0033
90	SLE FR 3	0.03731	0.00011	-0.01459	0.0088	-0.0359	-0.0034
90	SLE FR 4	0.03698	0.0001	-0.01474	0.0088	-0.0357	-0.0034
90	SLE FR 5	0.03773	0.00004	-0.01495	0.009	-0.0364	-0.0034
90	SLE QP 1	0.0363	0.0001	-0.01475	0.0087	-0.0351	-0.0033
90	SLO 1	-0.09527	-0.1598	-0.09684	0.0855	-0.0649	0.0926
90	SLO 2	-0.09527	-0.1598	-0.09684	0.0855	-0.0649	0.0926
90	SLO 3	-0.09526	0.16001	-0.09688	-0.0679	-0.0649	-0.0993
90	SLO 4	-0.09526	0.16001	-0.09688	-0.0679	-0.0649	-0.0993
90	SLO 5	-0.00319	-0.53292	-0.03931	0.2644	-0.0441	0.3164
90	SLO 6	-0.00319	-0.53292	-0.03931	0.2644	-0.0441	0.3164
90	SLO 7	-0.00315	0.53312	-0.03946	-0.2469	-0.0441	-0.323
90	SLO 8	-0.00315	0.53312	-0.03946	-0.2469	-0.0441	-0.323
90	SLO 9	0.07575	-0.53292	0.00996	0.2644	-0.0262	0.3164
90	SLO 10	0.07575	-0.53292	0.00996	0.2644	-0.0262	0.3164
90	SLO 11	0.07579	0.53312	0.00981	-0.247	-0.0262	-0.323
90	SLO 12	0.07579	0.53312	0.00981	-0.247	-0.0262	-0.323
90	SLO 13	0.16785	-0.1598	0.06738	0.0854	-0.0054	0.0926
90	SLO 14	0.16785	-0.1598	0.06738	0.0854	-0.0054	0.0926
90	SLO 15	0.16786	0.16001	0.06734	-0.068	-0.0054	-0.0992
90	SLO 16	0.16786	0.16001	0.06734	-0.068	-0.0054	-0.0992
90	SLD 1	-0.07166	-0.14765	-0.0821	0.0796	-0.0596	0.0853
90	SLD 2	-0.07166	-0.14765	-0.0821	0.0796	-0.0596	0.0853
90	SLD 3	-0.07165	0.14785	-0.08215	-0.0621	-0.0596	-0.092
90	SLD 4	-0.07165	0.14785	-0.08215	-0.0621	-0.0596	-0.092
90	SLD 5	0.00389	-0.4924	-0.03489	0.245	-0.0425	0.2921
90	SLD 6	0.00389	-0.4924	-0.03489	0.245	-0.0425	0.2921
90	SLD 7	0.00393	0.49261	-0.03503	-0.2275	-0.0425	-0.2987
90	SLD 8	0.00393	0.49261	-0.03503	-0.2275	-0.0425	-0.2987
90	SLD 9	0.06866	-0.4924	0.00553	0.2449	-0.0278	0.2921
90	SLD 10	0.06866	-0.4924	0.00553	0.2449	-0.0278	0.2921
90	SLD 11	0.0687	0.49261	0.00539	-0.2275	-0.0278	-0.2987
90	SLD 12	0.0687	0.49261	0.00539	-0.2275	-0.0278	-0.2987
90	SLD 13	0.14424	-0.14765	0.05264	0.0795	-0.0107	0.0853
90	SLD 14	0.14424	-0.14765	0.05264	0.0795	-0.0107	0.0853
90	SLD 15	0.14425	0.14785	0.0526	-0.0622	-0.0107	-0.0919
90	SLD 16	0.14425	0.14785	0.0526	-0.0622	-0.0107	-0.0919
90	SLV 1	-0.20488	-0.38959	-0.16521	0.1957	-0.0897	0.2304
90	SLV 2	-0.20488	-0.38959	-0.16521	0.1957	-0.0897	0.2304
90	SLV 3	-0.20485	0.3898	-0.16532	-0.1781	-0.0897	-0.2371
90	SLV 4	-0.20485	0.3898	-0.16532	-0.1781	-0.0897	-0.2371
90	SLV 5	-0.0361	-1.29888	-0.05972	0.6318	-0.0515	0.7758
90	SLV 6	-0.0361	-1.29888	-0.05972	0.6318	-0.0515	0.7758
90	SLV 7	-0.036	1.29909	-0.06009	-0.6143	-0.0515	-0.7825
90	SLV 8	-0.036	1.29909	-0.06009	-0.6143	-0.0515	-0.7825
90	SLV 9	0.1086	-1.29888	0.03059	0.6318	-0.0188	0.7758
90	SLV 10	0.1086	-1.29888	0.03059	0.6318	-0.0188	0.7758
90	SLV 11	0.10869	1.29909	0.03022	-0.6144	-0.0188	-0.7824
90	SLV 12	0.10869	1.29909	0.03022	-0.6144	-0.0188	-0.7824
90	SLV 13	0.27744	-0.38959	0.13582	0.1955	0.0194	0.2304
90	SLV 14	0.27744	-0.38959	0.13582	0.1955	0.0194	0.2304
90	SLV 15	0.27747	0.3898	0.13571	-0.1783	0.0194	-0.237
90	SLV 16	0.27747	0.3898	0.13571	-0.1783	0.0194	-0.237
91	SLU 1	-0.0056	0.00005	-0.12074	-0.0008	0.1119	-0.0002
91	SLU 2	-0.0056	0.00005	-0.12074	-0.0008	0.1119	-0.0002
91	SLU 3	-0.0056	0.00006	-0.12074	-0.0008	0.1119	-0.0002
91	SLU 4	-0.0056	0.00008	-0.12074	-0.0008	0.1119	-0.0002
91	SLU 5	-0.0056	0.00008	-0.12074	-0.0008	0.1119	-0.0002
91	SLU 6	-0.00616	0.00005	-0.12697	-0.0008	0.1179	-0.0002
91	SLU 7	-0.00616	0.00006	-0.12697	-0.0008	0.1179	-0.0002
91	SLU 8	-0.00616	0.00008	-0.12697	-0.0008	0.1179	-0.0002
91	SLU 9	-0.00616	0.00008	-0.12697	-0.0008	0.1179	-0.0002
91	SLU 10	-0.00673	0.00005	-0.13321	-0.0008	0.1239	-0.0002
91	SLU 11	-0.00673	0.00005	-0.13321	-0.0008	0.1239	-0.0002
91	SLU 12	-0.00673	0.00006	-0.13321	-0.0008	0.1239	-0.0002
91	SLU 13	-0.00673	0.00006	-0.13321	-0.0008	0.1239	-0.0002
91	SLU 14	-0.01137	-0.00008	-0.16434	-0.0008	0.1587	-0.0003
91	SLU 15	-0.01137	-0.00007	-0.16434	-0.0008	0.1587	-0.0003
91	SLU 16	-0.01137	-0.00005	-0.16434	-0.0009	0.1587	-0.0003
91	SLU 17	-0.01137	-0.00005	-0.16434	-0.0009	0.1587	-0.0003
91	SLU 18	-0.01194	-0.00008	-0.17057	-0.0009	0.1648	-0.0003
91	SLU 19	-0.01194	-0.00007	-0.17057	-0.0009	0.1648	-0.0003
91	SLU 20	-0.01194	-0.00005	-0.17057	-0.0009	0.1648	-0.0003
91	SLU 21	-0.01194	-0.00005	-0.17057	-0.0009	0.1648	-0.0003
91	SLU 22	-0.01251	-0.00008	-0.1768	-0.0009	0.1708	-0.0003
91	SLU 23	-0.01251	-0.00008	-0.1768	-0.0009	0.1708	-0.0003
91	SLU 24	-0.01251	-0.00007	-0.1768	-0.0009	0.1708	-0.0003
91	SLU 25	-0.01251	-0.00007	-0.1768	-0.0009	0.1708	-0.0003
91	SLU 26	-0.02004	-0.00027	-0.22973	-0.001	0.229	-0.0003
91	SLU 27	-0.02004	-0.00027	-0.22973	-0.001	0.229	-0.0003
91	SLU 28	-0.02004	-0.00026	-0.22973	-0.001	0.229	-0.0003
91	SLU 29	-0.02004	-0.00026	-0.22973	-0.001	0.229	-0.0003
91	SLU 30	-0.02061	-0.00027	-0.23597	-0.001	0.235	-0.0003
91	SLU 31	-0.02061	-0.00027	-0.23597	-0.001	0.235	-0.0003

Nodo	Cont.	Spostamento			Rotazione		
Ind.	N.br.	ux	uy	uz	rx	ry	rz
91	SLU 32	-0.02061	-0.00026	-0.23597	-0.001	0.235	-0.0003
91	SLU 33	-0.02061	-0.00026	-0.23597	-0.001	0.235	-0.0003
91	SLU 34	-0.0056	0.00005	-0.12074	-0.0008	0.1119	-0.0002
91	SLU 35	-0.0056	0.00005	-0.12074	-0.0008	0.1119	-0.0002
91	SLU 36	-0.0056	0.00006	-0.12074	-0.0008	0.1119	-0.0002
91	SLU 37	-0.0056	0.00008	-0.12074	-0.0008	0.1119	-0.0002
91	SLU 38	-0.0056	0.00008	-0.12074	-0.0008	0.1119	-0.0002
91	SLU 39	-0.00616	0.00005	-0.12697	-0.0008	0.1179	-0.0002
91	SLU 40	-0.00616	0.00006	-0.12697	-0.0008	0.1179	-0.0002
91	SLU 41	-0.00616	0.00008	-0.12697	-0.0008	0.1179	-0.0002
91	SLU 42	-0.00616	0.00008	-0.12697	-0.0008	0.1179	-0.0002
91	SLU 43	-0.00673	0.00005	-0.13321	-0.0008	0.1239	-0.0002
91	SLU 44	-0.00673	0.00005	-0.13321	-0.0008	0.1239	-0.0002
91	SLU 45	-0.00673	0.00006	-0.13321	-0.0008	0.1239	-0.0002
91	SLU 46	-0.00673	0.00006	-0.13321	-0.0008	0.1239	-0.0002
91	SLU 47	-0.01137	-0.00008	-0.16434	-0.0008	0.1587	-0.0003
91	SLU 48	-0.01137	-0.00007	-0.16434	-0.0008	0.1587	-0.0003
91	SLU 49	-0.01137	-0.00005	-0.16434	-0.0009	0.1587	-0.0003
91	SLU 50	-0.01137	-0.00005	-0.16434	-0.0009	0.1587	-0.0003
91	SLU 51	-0.01194	-0.00008	-0.17057	-0.0009	0.1648	-0.0003
91	SLU 52	-0.01194	-0.00007	-0.17057	-0.0009	0.1648	-0.0003
91	SLU 53	-0.01194	-0.00005	-0.17057	-0.0009	0.1648	-0.0003
91	SLU 54	-0.01194	-0.00005	-0.17057	-0.0009	0.1648	-0.0003
91	SLU 55	-0.01251	-0.00008	-0.1768	-0.0009	0.1708	-0.0003
91	SLU 56	-0.01251	-0.00008	-0.1768	-0.0009	0.1708	-0.0003
91	SLU 57	-0.01251	-0.00007	-0.1768	-0.0009	0.1708	-0.0003
91	SLU 58	-0.01251	-0.00007	-0.1768	-0.0009	0.1708	-0.0003
91	SLU 59	-0.02004	-0.00027	-0.22973	-0.001	0.229	-0.0003
91	SLU 60	-0.02004	-0.00027	-0.22973	-0.001	0.229	-0.0003
91	SLU 61	-0.02004	-0.00026	-0.22973	-0.001	0.229	-0.0003
91	SLU 62	-0.02004	-0.00026	-0.22973	-0.001	0.229	-0.0003
91	SLU 63	-0.02061	-0.00027	-0.23597	-0.001	0.235	-0.0003
91	SLU 64	-0.02061	-0.00027	-0.23597	-0.001	0.235	-0.0003
91	SLU 65	-0.02061	-0.00026	-0.23597	-0.001	0.235	-0.0003
91	SLU 66	-0.02061	-0.00026	-0.23597	-0.001	0.235	-0.0003
91	SLU 67	-0.00728	0.00006	-0.15696	-0.001	0.1454	-0.0003
91	SLU 68	-0.00728	0.00006	-0.15696	-0.001	0.1454	-0.0003
91	SLU 69	-0.00728	0.00007	-0.15696	-0.001	0.1454	-0.0003
91	SLU 70	-0.00728	0.00009	-0.15696	-0.001	0.1454	-0.0003
91	SLU 71	-0.00728	0.00009	-0.15696	-0.001	0.1454	-0.0003
91	SLU 72	-0.00784	0.00006	-0.16319	-0.001	0.1515	-0.0003
91	SLU 73	-0.00784	0.00008	-0.16319	-0.001	0.1515	-0.0003
91	SLU 74	-0.00784	0.00009	-0.16319	-0.001	0.1515	-0.0003
91	SLU 75	-0.00784	0.00009	-0.16319	-0.001	0.1515	-0.0003
91	SLU 76	-0.00841	0.00007	-0.16943	-0.001	0.1575	-0.0003
91	SLU 77	-0.00841	0.00007	-0.16943	-0.001	0.1575	-0.0003
91	SLU 78	-0.00841	0.00008	-0.16943	-0.0011	0.1575	-0.0003
91	SLU 79	-0.00841	0.00008	-0.16943	-0.001	0.1575	-0.0003
91	SLU 80	-0.01305	-0.00007	-0.20056	-0.0011	0.1923	-0.0003
91	SLU 81	-0.01305	-0.00005	-0.20056	-0.0011	0.1923	-0.0003
91	SLU 82	-0.01305	-0.00004	-0.20056	-0.0011	0.1923	-0.0003
91	SLU 83	-0.01305	-0.00004	-0.20056	-0.0011	0.1923	-0.0003
91	SLU 84	-0.01362	-0.00006	-0.20679	-0.0011	0.1983	-0.0003
91	SLU 85	-0.01362	-0.00005	-0.20679	-0.0011	0.1983	-0.0003
91	SLU 86	-0.01362	-0.00003	-0.20679	-0.0011	0.1983	-0.0003
91	SLU 87	-0.01362	-0.00003	-0.20679	-0.0011	0.1983	-0.0003
91	SLU 88	-0.01419	-0.00006	-0.21303	-0.0011	0.2043	-0.0003
91	SLU 89	-0.01419	-0.00006	-0.21303	-0.0011	0.2043	-0.0003
91	SLU 90	-0.01419	-0.00005	-0.21303	-0.0011	0.2043	-0.0003
91	SLU 91	-0.01419	-0.00005	-0.21303	-0.0011	0.2043	-0.0003
91	SLU 92	-0.02172	-0.00026	-0.26596	-0.0012	0.2626	-0.0004
91	SLU 93	-0.02172	-0.00026	-0.26596	-0.0012	0.2626	-0.0004
91	SLU 94	-0.02172	-0.00025	-0.26595	-0.0012	0.2626	-0.0004
91	SLU 95	-0.02172	-0.00025	-0.26596	-0.0012	0.2626	-0.0004
91	SLU 96	-0.02229	-0.00026	-0.27219	-0.0012	0.2686	-0.0004
91	SLU 97	-0.02229	-0.00026	-0.27219	-0.0012	0.2686	-0.0004
91	SLU 98	-0.02229	-0.00025	-0.27219	-0.0012	0.2686	-0.0004
91	SLU 99	-0.02229	-0.00025	-0.27219	-0.0012	0.2686	-0.0004
91	SLU 100	-0.00728	0.00006	-0.15696	-0.001	0.1454	-0.0003
91	SLU 101	-0.00728	0.00006	-0.15696	-0.001	0.1454	-0.0003
91	SLU 102	-0.00728	0.00007	-0.15696	-0.001	0.1454	-0.0003
91	SLU 103	-0.00728	0.00009	-0.15696	-0.001	0.1454	-0.0003
91	SLU 104	-0.00728	0.00009	-0.15696	-0.001	0.1454	-0.0003
91	SLU 105	-0.00784	0.00006	-0.16319	-0.001	0.1515	-0.0003
91	SLU 106	-0.00784	0.00008	-0.16319	-0.001	0.1515	-0.0003
91	SLU 107	-0.00784	0.00009	-0.16319	-0.001	0.1515	-0.0003
91	SLU 108	-0.00784	0.00009	-0.16319	-0.001	0.1515	-0.0003
91	SLU 109	-0.00841	0.00007	-0.16943	-0.001	0.1575	-0.0003
91	SLU 110	-0.00841	0.00007	-0.16943	-0.001	0.1575	-0.0003
91	SLU 111	-0.00841	0.00008	-0.16943	-0.0011	0.1575	-0.0003
91	SLU 112	-0.00841	0.00008	-0.16943	-0.001	0.1575	-0.0003
91	SLU 113	-0.01305	-0.00007	-0.20056	-0.0011	0.1923	-0.0003
91	SLU 114	-0.01305	-0.00005	-0.20056	-0.0011	0.1923	-0.0003
91	SLU 115	-0.01305	-0.00004	-0.20056	-0.0011	0.1923	-0.0003
91	SLU 116	-0.01305	-0.00004	-0.20056	-0.0011	0.1923	-0.0003
91	SLU 117	-0.01362	-0.00006	-0.20679	-0.0011	0.1983	-0.0003
91	SLU 118	-0.01362	-0.00005	-0.20679	-0.0011	0.1983	-0.0003
91	SLU 119	-0.01362	-0.00003	-0.20679	-0.0011	0.1983	-0.0003
91	SLU 120	-0.01362	-0.00003	-0.20679	-0.0011	0.1983	-0.0003
91	SLU 121	-0.01419	-0.00006	-0.21303	-0.0011	0.2043	-0.0003
91	SLU 122	-0.01419	-0.00006	-0.21303	-0.0011	0.2043	-0.0003
91	SLU 123	-0.01419	-0.00005	-0.21303	-0.0011	0.2043	-0.0003
91	SLU 124	-0.01419	-0.00005	-0.21303	-0.0011	0.2043	-0.0003
91	SLU 125	-0.02172	-0.00026	-0.26596	-0.0012	0.2626	-0.0004
91	SLU 126	-0.02172	-0.00026	-0.26596	-0.0012	0.2626	-0.0004

Nodo	Cont.	Spostamento			Rotazione		
Ind.	N.br.	ux	uy	uz	rx	ry	rz
91	SLU 127	-0.02172	-0.00025	-0.26595	-0.0012	0.2626	-0.0004
91	SLU 128	-0.02172	-0.00025	-0.26596	-0.0012	0.2626	-0.0004
91	SLU 129	-0.02229	-0.00026	-0.27219	-0.0012	0.2686	-0.0004
91	SLU 130	-0.02229	-0.00026	-0.27219	-0.0012	0.2686	-0.0004
91	SLU 131	-0.02229	-0.00025	-0.27219	-0.0012	0.2686	-0.0004
91	SLU 132	-0.02229	-0.00025	-0.27219	-0.0012	0.2686	-0.0004
91	SLE RA 1	-0.0056	0.00005	-0.12074	-0.0008	0.1119	-0.0002
91	SLE RA 2	-0.0056	0.00005	-0.12074	-0.0008	0.1119	-0.0002
91	SLE RA 3	-0.0056	0.00006	-0.12074	-0.0008	0.1119	-0.0002
91	SLE RA 4	-0.0056	0.00007	-0.12074	-0.0008	0.1119	-0.0002
91	SLE RA 5	-0.0056	0.00007	-0.12074	-0.0008	0.1119	-0.0002
91	SLE RA 6	-0.00598	0.00005	-0.12489	-0.0008	0.1159	-0.0002
91	SLE RA 7	-0.00598	0.00006	-0.12489	-0.0008	0.1159	-0.0002
91	SLE RA 8	-0.00598	0.00007	-0.12489	-0.0008	0.1159	-0.0002
91	SLE RA 9	-0.00598	0.00007	-0.12489	-0.0008	0.1159	-0.0002
91	SLE RA 10	-0.00635	0.00005	-0.12905	-0.0008	0.1199	-0.0002
91	SLE RA 11	-0.00635	0.00005	-0.12905	-0.0008	0.1199	-0.0002
91	SLE RA 12	-0.00635	0.00006	-0.12905	-0.0008	0.1199	-0.0002
91	SLE RA 13	-0.00635	0.00006	-0.12905	-0.0008	0.1199	-0.0002
91	SLE RA 14	-0.00945	-0.00004	-0.1498	-0.0008	0.1431	-0.0002
91	SLE RA 15	-0.00945	-0.00003	-0.1498	-0.0008	0.1431	-0.0002
91	SLE RA 16	-0.00945	-0.00002	-0.1498	-0.0008	0.1431	-0.0002
91	SLE RA 17	-0.00945	-0.00002	-0.1498	-0.0008	0.1431	-0.0002
91	SLE RA 18	-0.00983	-0.00004	-0.15396	-0.0008	0.1471	-0.0003
91	SLE RA 19	-0.00983	-0.00003	-0.15396	-0.0008	0.1471	-0.0003
91	SLE RA 20	-0.00983	-0.00002	-0.15396	-0.0008	0.1471	-0.0003
91	SLE RA 21	-0.00983	-0.00002	-0.15396	-0.0008	0.1471	-0.0003
91	SLE RA 22	-0.0102	-0.00004	-0.15812	-0.0009	0.1511	-0.0003
91	SLE RA 23	-0.0102	-0.00004	-0.15812	-0.0009	0.1511	-0.0003
91	SLE RA 24	-0.0102	-0.00003	-0.15812	-0.0009	0.1511	-0.0003
91	SLE RA 25	-0.0102	-0.00003	-0.15812	-0.0009	0.1511	-0.0003
91	SLE RA 26	-0.01523	-0.00017	-0.1934	-0.0009	0.19	-0.0003
91	SLE RA 27	-0.01523	-0.00017	-0.1934	-0.0009	0.19	-0.0003
91	SLE RA 28	-0.01523	-0.00016	-0.1934	-0.0009	0.19	-0.0003
91	SLE RA 29	-0.01523	-0.00016	-0.1934	-0.0009	0.19	-0.0003
91	SLE RA 30	-0.0156	-0.00017	-0.19756	-0.0009	0.194	-0.0003
91	SLE RA 31	-0.0156	-0.00017	-0.19756	-0.0009	0.194	-0.0003
91	SLE RA 32	-0.0156	-0.00016	-0.19756	-0.0009	0.194	-0.0003
91	SLE RA 33	-0.0156	-0.00016	-0.19756	-0.0009	0.194	-0.0003
91	SLE FR 1	-0.0056	0.00005	-0.12074	-0.0008	0.1119	-0.0002
91	SLE FR 2	-0.0056	0.00005	-0.12074	-0.0008	0.1119	-0.0002
91	SLE FR 3	-0.0056	0.00006	-0.12074	-0.0008	0.1119	-0.0002
91	SLE FR 4	-0.00575	0.00005	-0.1224	-0.0008	0.1135	-0.0002
91	SLE FR 5	-0.00945	-0.00004	-0.1498	-0.0008	0.1431	-0.0002
91	SLE QP 1	-0.0056	0.00005	-0.12074	-0.0008	0.1119	-0.0002
91	SLO 1	-0.14427	-0.32012	-0.02314	0.2813	0.1172	-0.0087
91	SLO 2	-0.14427	-0.32012	-0.02314	0.2813	0.1172	-0.0087
91	SLO 3	-0.14427	0.32021	-0.02308	-0.2828	0.1172	0.0082
91	SLO 4	-0.14427	0.32021	-0.02308	-0.2828	0.1172	0.0082
91	SLO 5	-0.04721	-1.06717	-0.09154	0.9393	0.1135	-0.0284
91	SLO 6	-0.04721	-1.06717	-0.09154	0.9393	0.1135	-0.0284
91	SLO 7	-0.04719	1.06727	-0.09135	-0.9408	0.1135	0.028
91	SLO 8	-0.04719	1.06727	-0.09135	-0.9408	0.1135	0.028
91	SLO 9	0.036	-1.06717	-0.15012	0.9393	0.1103	-0.0284
91	SLO 10	0.036	-1.06717	-0.15012	0.9393	0.1103	-0.0284
91	SLO 11	0.03601	1.06727	-0.14993	-0.9408	0.1103	0.028
91	SLO 12	0.03601	1.06727	-0.14993	-0.9408	0.1103	0.028
91	SLO 13	0.13307	-0.32012	-0.2184	0.2812	0.1066	-0.0087
91	SLO 14	0.13307	-0.32012	-0.2184	0.2812	0.1066	-0.0087
91	SLO 15	0.13308	0.32022	-0.21834	-0.2828	0.1066	0.0082
91	SLO 16	0.13308	0.32022	-0.21834	-0.2828	0.1066	0.0082
91	SLD 1	-0.11939	-0.29578	-0.04065	0.2598	0.1163	-0.008
91	SLD 2	-0.11939	-0.29578	-0.04065	0.2598	0.1163	-0.008
91	SLD 3	-0.11938	0.29588	-0.0406	-0.2613	0.1162	0.0076
91	SLD 4	-0.11938	0.29588	-0.0406	-0.2613	0.1162	0.0076
91	SLD 5	-0.03974	-0.98605	-0.09679	0.8678	0.1132	-0.0263
91	SLD 6	-0.03974	-0.98605	-0.09679	0.8678	0.1132	-0.0263
91	SLD 7	-0.03972	0.98615	-0.09661	-0.8693	0.1132	0.0258
91	SLD 8	-0.03972	0.98615	-0.09661	-0.8693	0.1132	0.0258
91	SLD 9	0.02853	-0.98605	-0.14486	0.8678	0.1106	-0.0263
91	SLD 10	0.02853	-0.98605	-0.14486	0.8678	0.1106	-0.0263
91	SLD 11	0.02855	0.98615	-0.14468	-0.8694	0.1106	0.0258
91	SLD 12	0.02855	0.98615	-0.14468	-0.8694	0.1106	0.0258
91	SLD 13	0.10819	-0.29578	-0.20087	0.2598	0.1075	-0.008
91	SLD 14	0.10819	-0.29578	-0.20087	0.2598	0.1075	-0.008
91	SLD 15	0.10819	0.29588	-0.20082	-0.2613	0.1075	0.0076
91	SLD 16	0.10819	0.29588	-0.20082	-0.2613	0.1075	0.0076
91	SLV 1	-0.2598	-0.78021	0.05816	0.6865	0.1217	-0.0208
91	SLV 2	-0.2598	-0.78021	0.05816	0.6865	0.1217	-0.0208
91	SLV 3	-0.25979	0.7803	0.0583	-0.688	0.1216	0.0204
91	SLV 4	-0.25979	0.7803	0.0583	-0.688	0.1216	0.0204
91	SLV 5	-0.08188	-2.6008	-0.06728	2.2901	0.1149	-0.069
91	SLV 6	-0.08188	-2.6008	-0.06728	2.2901	0.1149	-0.069
91	SLV 7	-0.08183	2.6009	-0.06681	-2.2917	0.1148	0.0685
91	SLV 8	-0.08183	2.6009	-0.06681	-2.2917	0.1148	0.0685
91	SLV 9	0.07064	-2.6008	-0.17466	2.2901	0.109	-0.069
91	SLV 10	0.07064	-2.6008	-0.17466	2.2901	0.109	-0.069
91	SLV 11	0.07069	2.6009	-0.17419	-2.2917	0.1089	0.0685
91	SLV 12	0.07069	2.6009	-0.17419	-2.2917	0.1089	0.0685
91	SLV 13	0.2486	-0.78021	-0.29977	0.6865	0.1021	-0.0208
91	SLV 14	0.2486	-0.78021	-0.29977	0.6865	0.1021	-0.0208
91	SLV 15	0.24861	0.7803	-0.29963	-0.688	0.1021	0.0204
91	SLV 16	0.24861	0.7803	-0.29963	-0.688	0.1021	0.0204
92	SLU 1	0.0056	0.00005	-0.12074	-0.0008	-0.1119	0.0002
92	SLU 2	0.0056	0.00005	-0.12074	-0.0008	-0.1119	0.0002

Nodo	Cont.	Spostamento			Rotazione		
Ind.	N.br.	ux	uy	uz	rx	ry	rz
92	SLU 3	0.0056	0.00006	-0.12074	-0.0008	-0.1119	0.0002
92	SLU 4	0.0056	0.00008	-0.12074	-0.0008	-0.1119	0.0002
92	SLU 5	0.0056	0.00008	-0.12074	-0.0008	-0.1119	0.0002
92	SLU 6	0.00624	0.00005	-0.1269	-0.0008	-0.1179	0.0002
92	SLU 7	0.00624	0.00006	-0.1269	-0.0008	-0.1179	0.0002
92	SLU 8	0.00624	0.00008	-0.1269	-0.0008	-0.1179	0.0002
92	SLU 9	0.00624	0.00008	-0.1269	-0.0008	-0.1179	0.0002
92	SLU 10	0.00687	0.00005	-0.13307	-0.0008	-0.1239	0.0002
92	SLU 11	0.00687	0.00005	-0.13307	-0.0008	-0.1239	0.0002
92	SLU 12	0.00687	0.00006	-0.13307	-0.0008	-0.1239	0.0002
92	SLU 13	0.00687	0.00006	-0.13307	-0.0008	-0.1239	0.0002
92	SLU 14	0.01149	-0.00008	-0.16422	-0.0008	-0.1587	0.0003
92	SLU 15	0.01149	-0.00007	-0.16422	-0.0008	-0.1587	0.0003
92	SLU 16	0.01149	-0.00005	-0.16422	-0.0009	-0.1587	0.0003
92	SLU 17	0.01149	-0.00005	-0.16422	-0.0009	-0.1587	0.0003
92	SLU 18	0.01213	-0.00008	-0.17039	-0.0009	-0.1647	0.0003
92	SLU 19	0.01213	-0.00007	-0.17039	-0.0009	-0.1647	0.0003
92	SLU 20	0.01213	-0.00005	-0.17039	-0.0009	-0.1647	0.0003
92	SLU 21	0.01213	-0.00005	-0.17039	-0.0009	-0.1647	0.0003
92	SLU 22	0.01277	-0.00008	-0.17655	-0.0009	-0.1708	0.0003
92	SLU 23	0.01277	-0.00008	-0.17655	-0.0009	-0.1708	0.0003
92	SLU 24	0.01277	-0.00007	-0.17655	-0.0009	-0.1708	0.0003
92	SLU 25	0.01277	-0.00007	-0.17655	-0.0009	-0.1708	0.0003
92	SLU 26	0.02034	-0.00027	-0.22945	-0.001	-0.229	0.0003
92	SLU 27	0.02034	-0.00027	-0.22945	-0.001	-0.229	0.0003
92	SLU 28	0.02034	-0.00026	-0.22945	-0.001	-0.229	0.0003
92	SLU 29	0.02034	-0.00026	-0.22945	-0.001	-0.229	0.0003
92	SLU 30	0.02098	-0.00027	-0.23561	-0.001	-0.235	0.0003
92	SLU 31	0.02098	-0.00027	-0.23561	-0.001	-0.235	0.0003
92	SLU 32	0.02098	-0.00026	-0.23561	-0.001	-0.235	0.0003
92	SLU 33	0.02098	-0.00026	-0.23561	-0.001	-0.235	0.0003
92	SLU 34	0.0056	0.00005	-0.12074	-0.0008	-0.1119	0.0002
92	SLU 35	0.0056	0.00005	-0.12074	-0.0008	-0.1119	0.0002
92	SLU 36	0.0056	0.00006	-0.12074	-0.0008	-0.1119	0.0002
92	SLU 37	0.0056	0.00008	-0.12074	-0.0008	-0.1119	0.0002
92	SLU 38	0.0056	0.00008	-0.12074	-0.0008	-0.1119	0.0002
92	SLU 39	0.00624	0.00005	-0.1269	-0.0008	-0.1179	0.0002
92	SLU 40	0.00624	0.00006	-0.1269	-0.0008	-0.1179	0.0002
92	SLU 41	0.00624	0.00008	-0.1269	-0.0008	-0.1179	0.0002
92	SLU 42	0.00624	0.00008	-0.1269	-0.0008	-0.1179	0.0002
92	SLU 43	0.00687	0.00005	-0.13307	-0.0008	-0.1239	0.0002
92	SLU 44	0.00687	0.00005	-0.13307	-0.0008	-0.1239	0.0002
92	SLU 45	0.00687	0.00006	-0.13307	-0.0008	-0.1239	0.0002
92	SLU 46	0.00687	0.00006	-0.13307	-0.0008	-0.1239	0.0002
92	SLU 47	0.01149	-0.00008	-0.16422	-0.0008	-0.1587	0.0003
92	SLU 48	0.01149	-0.00007	-0.16422	-0.0008	-0.1587	0.0003
92	SLU 49	0.01149	-0.00005	-0.16422	-0.0009	-0.1587	0.0003
92	SLU 50	0.01149	-0.00005	-0.16422	-0.0009	-0.1587	0.0003
92	SLU 51	0.01213	-0.00008	-0.17039	-0.0009	-0.1647	0.0003
92	SLU 52	0.01213	-0.00007	-0.17039	-0.0009	-0.1647	0.0003
92	SLU 53	0.01213	-0.00005	-0.17039	-0.0009	-0.1647	0.0003
92	SLU 54	0.01213	-0.00005	-0.17039	-0.0009	-0.1647	0.0003
92	SLU 55	0.01277	-0.00008	-0.17655	-0.0009	-0.1708	0.0003
92	SLU 56	0.01277	-0.00008	-0.17655	-0.0009	-0.1708	0.0003
92	SLU 57	0.01277	-0.00007	-0.17655	-0.0009	-0.1708	0.0003
92	SLU 58	0.01277	-0.00007	-0.17655	-0.0009	-0.1708	0.0003
92	SLU 59	0.02034	-0.00027	-0.22945	-0.001	-0.229	0.0003
92	SLU 60	0.02034	-0.00027	-0.22945	-0.001	-0.229	0.0003
92	SLU 61	0.02034	-0.00026	-0.22945	-0.001	-0.229	0.0003
92	SLU 62	0.02034	-0.00026	-0.22945	-0.001	-0.229	0.0003
92	SLU 63	0.02098	-0.00027	-0.23561	-0.001	-0.235	0.0003
92	SLU 64	0.02098	-0.00027	-0.23561	-0.001	-0.235	0.0003
92	SLU 65	0.02098	-0.00026	-0.23561	-0.001	-0.235	0.0003
92	SLU 66	0.02098	-0.00026	-0.23561	-0.001	-0.235	0.0003
92	SLU 67	0.00728	0.00006	-0.15696	-0.001	-0.1454	0.0003
92	SLU 68	0.00728	0.00006	-0.15696	-0.001	-0.1454	0.0003
92	SLU 69	0.00728	0.00007	-0.15696	-0.001	-0.1454	0.0003
92	SLU 70	0.00728	0.00009	-0.15696	-0.001	-0.1454	0.0003
92	SLU 71	0.00728	0.00009	-0.15696	-0.001	-0.1454	0.0003
92	SLU 72	0.00791	0.00006	-0.16312	-0.001	-0.1515	0.0003
92	SLU 73	0.00791	0.00008	-0.16312	-0.001	-0.1515	0.0003
92	SLU 74	0.00791	0.00009	-0.16312	-0.001	-0.1515	0.0003
92	SLU 75	0.00791	0.00009	-0.16312	-0.001	-0.1515	0.0003
92	SLU 76	0.00855	0.00007	-0.16929	-0.001	-0.1575	0.0003
92	SLU 77	0.00855	0.00007	-0.16929	-0.001	-0.1575	0.0003
92	SLU 78	0.00855	0.00008	-0.16929	-0.0011	-0.1575	0.0003
92	SLU 79	0.00855	0.00008	-0.16929	-0.001	-0.1575	0.0003
92	SLU 80	0.01317	-0.00007	-0.20044	-0.0011	-0.1923	0.0003
92	SLU 81	0.01317	-0.00005	-0.20044	-0.0011	-0.1923	0.0003
92	SLU 82	0.01317	-0.00004	-0.20044	-0.0011	-0.1923	0.0003
92	SLU 83	0.01317	-0.00004	-0.20044	-0.0011	-0.1923	0.0003
92	SLU 84	0.01381	-0.00006	-0.20661	-0.0011	-0.1983	0.0003
92	SLU 85	0.01381	-0.00005	-0.20661	-0.0011	-0.1983	0.0003
92	SLU 86	0.01381	-0.00003	-0.20661	-0.0011	-0.1983	0.0003
92	SLU 87	0.01381	-0.00004	-0.20661	-0.0011	-0.1983	0.0003
92	SLU 88	0.01445	-0.00006	-0.21277	-0.0011	-0.2043	0.0003
92	SLU 89	0.01445	-0.00006	-0.21277	-0.0011	-0.2043	0.0003
92	SLU 90	0.01445	-0.00005	-0.21277	-0.0011	-0.2043	0.0003
92	SLU 91	0.01445	-0.00005	-0.21277	-0.0011	-0.2043	0.0003
92	SLU 92	0.02202	-0.00026	-0.26567	-0.0012	-0.2625	0.0004
92	SLU 93	0.02202	-0.00026	-0.26567	-0.0012	-0.2625	0.0004
92	SLU 94	0.02202	-0.00025	-0.26567	-0.0012	-0.2625	0.0004
92	SLU 95	0.02202	-0.00025	-0.26567	-0.0012	-0.2625	0.0004
92	SLU 96	0.02265	-0.00026	-0.27183	-0.0012	-0.2686	0.0004
92	SLU 97	0.02265	-0.00026	-0.27183	-0.0012	-0.2686	0.0004

Nodo	Cont.	Spostamento			Rotazione		
Ind.	N.br.	ux	uy	uz	rx	ry	rz
92	SLU 98	0.02265	-0.00025	-0.27183	-0.0012	-0.2686	0.0004
92	SLU 99	0.02265	-0.00025	-0.27183	-0.0012	-0.2686	0.0004
92	SLU 100	0.00728	0.00006	-0.15696	-0.001	-0.1454	0.0003
92	SLU 101	0.00728	0.00006	-0.15696	-0.001	-0.1454	0.0003
92	SLU 102	0.00728	0.00007	-0.15696	-0.001	-0.1454	0.0003
92	SLU 103	0.00728	0.00009	-0.15696	-0.001	-0.1454	0.0003
92	SLU 104	0.00728	0.00009	-0.15696	-0.001	-0.1454	0.0003
92	SLU 105	0.00791	0.00006	-0.16312	-0.001	-0.1515	0.0003
92	SLU 106	0.00791	0.00008	-0.16312	-0.001	-0.1515	0.0003
92	SLU 107	0.00791	0.00009	-0.16312	-0.001	-0.1515	0.0003
92	SLU 108	0.00791	0.00009	-0.16312	-0.001	-0.1515	0.0003
92	SLU 109	0.00855	0.00007	-0.16929	-0.001	-0.1575	0.0003
92	SLU 110	0.00855	0.00007	-0.16929	-0.001	-0.1575	0.0003
92	SLU 111	0.00855	0.00008	-0.16929	-0.0011	-0.1575	0.0003
92	SLU 112	0.00855	0.00008	-0.16929	-0.001	-0.1575	0.0003
92	SLU 113	0.01317	-0.00007	-0.20044	-0.0011	-0.1923	0.0003
92	SLU 114	0.01317	-0.00005	-0.20044	-0.0011	-0.1923	0.0003
92	SLU 115	0.01317	-0.00004	-0.20044	-0.0011	-0.1923	0.0003
92	SLU 116	0.01317	-0.00004	-0.20044	-0.0011	-0.1923	0.0003
92	SLU 117	0.01381	-0.00006	-0.20661	-0.0011	-0.1983	0.0003
92	SLU 118	0.01381	-0.00005	-0.20661	-0.0011	-0.1983	0.0003
92	SLU 119	0.01381	-0.00003	-0.20661	-0.0011	-0.1983	0.0003
92	SLU 120	0.01381	-0.00004	-0.20661	-0.0011	-0.1983	0.0003
92	SLU 121	0.01445	-0.00006	-0.21277	-0.0011	-0.2043	0.0003
92	SLU 122	0.01445	-0.00006	-0.21277	-0.0011	-0.2043	0.0003
92	SLU 123	0.01445	-0.00005	-0.21277	-0.0011	-0.2043	0.0003
92	SLU 124	0.01445	-0.00005	-0.21277	-0.0011	-0.2043	0.0003
92	SLU 125	0.02202	-0.00026	-0.26567	-0.0012	-0.2625	0.0004
92	SLU 126	0.02202	-0.00026	-0.26567	-0.0012	-0.2625	0.0004
92	SLU 127	0.02202	-0.00025	-0.26567	-0.0012	-0.2625	0.0004
92	SLU 128	0.02202	-0.00025	-0.26567	-0.0012	-0.2625	0.0004
92	SLU 129	0.02265	-0.00026	-0.27183	-0.0012	-0.2686	0.0004
92	SLU 130	0.02265	-0.00026	-0.27183	-0.0012	-0.2686	0.0004
92	SLU 131	0.02265	-0.00025	-0.27183	-0.0012	-0.2686	0.0004
92	SLU 132	0.02265	-0.00025	-0.27183	-0.0012	-0.2686	0.0004
92	SLE RA 1	0.0056	0.00005	-0.12074	-0.0008	-0.1119	0.0002
92	SLE RA 2	0.0056	0.00005	-0.12074	-0.0008	-0.1119	0.0002
92	SLE RA 3	0.0056	0.00006	-0.12074	-0.0008	-0.1119	0.0002
92	SLE RA 4	0.0056	0.00007	-0.12074	-0.0008	-0.1119	0.0002
92	SLE RA 5	0.0056	0.00007	-0.12074	-0.0008	-0.1119	0.0002
92	SLE RA 6	0.00602	0.00005	-0.12485	-0.0008	-0.1159	0.0002
92	SLE RA 7	0.00602	0.00006	-0.12485	-0.0008	-0.1159	0.0002
92	SLE RA 8	0.00602	0.00007	-0.12485	-0.0008	-0.1159	0.0002
92	SLE RA 9	0.00602	0.00007	-0.12485	-0.0008	-0.1159	0.0002
92	SLE RA 10	0.00645	0.00005	-0.12896	-0.0008	-0.1199	0.0002
92	SLE RA 11	0.00645	0.00005	-0.12896	-0.0008	-0.1199	0.0002
92	SLE RA 12	0.00645	0.00006	-0.12896	-0.0008	-0.1199	0.0002
92	SLE RA 13	0.00645	0.00006	-0.12896	-0.0008	-0.1199	0.0002
92	SLE RA 14	0.00953	-0.00004	-0.14973	-0.0008	-0.1431	0.0002
92	SLE RA 15	0.00953	-0.00003	-0.14973	-0.0008	-0.1431	0.0002
92	SLE RA 16	0.00953	-0.00002	-0.14973	-0.0008	-0.1431	0.0002
92	SLE RA 17	0.00953	-0.00002	-0.14973	-0.0008	-0.1431	0.0002
92	SLE RA 18	0.00995	-0.00004	-0.15384	-0.0008	-0.1471	0.0003
92	SLE RA 19	0.00995	-0.00003	-0.15384	-0.0008	-0.1471	0.0003
92	SLE RA 20	0.00995	-0.00002	-0.15384	-0.0008	-0.1471	0.0003
92	SLE RA 21	0.00995	-0.00002	-0.15384	-0.0008	-0.1471	0.0003
92	SLE RA 22	0.01038	-0.00004	-0.15795	-0.0009	-0.1511	0.0003
92	SLE RA 23	0.01038	-0.00004	-0.15795	-0.0009	-0.1511	0.0003
92	SLE RA 24	0.01038	-0.00003	-0.15795	-0.0009	-0.1511	0.0003
92	SLE RA 25	0.01038	-0.00003	-0.15795	-0.0009	-0.1511	0.0003
92	SLE RA 26	0.01542	-0.00017	-0.19321	-0.0009	-0.19	0.0003
92	SLE RA 27	0.01542	-0.00017	-0.19321	-0.0009	-0.19	0.0003
92	SLE RA 28	0.01542	-0.00016	-0.19321	-0.0009	-0.19	0.0003
92	SLE RA 29	0.01542	-0.00016	-0.19321	-0.0009	-0.19	0.0003
92	SLE RA 30	0.01585	-0.00017	-0.19732	-0.0009	-0.194	0.0003
92	SLE RA 31	0.01585	-0.00017	-0.19732	-0.0009	-0.194	0.0003
92	SLE RA 32	0.01585	-0.00016	-0.19732	-0.0009	-0.194	0.0003
92	SLE RA 33	0.01585	-0.00016	-0.19732	-0.0009	-0.194	0.0003
92	SLE FR 1	0.0056	0.00005	-0.12074	-0.0008	-0.1119	0.0002
92	SLE FR 2	0.0056	0.00005	-0.12074	-0.0008	-0.1119	0.0002
92	SLE FR 3	0.0056	0.00006	-0.12074	-0.0008	-0.1119	0.0002
92	SLE FR 4	0.00577	0.00005	-0.12238	-0.0008	-0.1135	0.0002
92	SLE FR 5	0.00953	-0.00004	-0.14973	-0.0008	-0.1431	0.0002
92	SLE QP 1	0.0056	0.00005	-0.12074	-0.0008	-0.1119	0.0002
92	SLO 1	-0.13307	-0.32012	-0.2184	0.2812	-0.1066	0.0087
92	SLO 2	-0.13307	-0.32012	-0.2184	0.2812	-0.1066	0.0087
92	SLO 3	-0.13308	0.32022	-0.21834	-0.2828	-0.1066	-0.0082
92	SLO 4	-0.13308	0.32022	-0.21834	-0.2828	-0.1066	-0.0082
92	SLO 5	-0.036	-1.06717	-0.15012	0.9393	-0.1103	0.0284
92	SLO 6	-0.036	-1.06717	-0.15012	0.9393	-0.1103	0.0284
92	SLO 7	-0.03601	1.06727	-0.14993	-0.9408	-0.1103	-0.028
92	SLO 8	-0.03601	1.06727	-0.14993	-0.9408	-0.1103	-0.028
92	SLO 9	0.04721	-1.06717	-0.09154	0.9393	-0.1135	0.0284
92	SLO 10	0.04721	-1.06717	-0.09154	0.9393	-0.1135	0.0284
92	SLO 11	0.04719	1.06727	-0.09135	-0.9408	-0.1135	-0.028
92	SLO 12	0.04719	1.06727	-0.09135	-0.9408	-0.1135	-0.028
92	SLO 13	0.14427	-0.32012	-0.02313	0.2813	-0.1172	0.0087
92	SLO 14	0.14427	-0.32012	-0.02313	0.2813	-0.1172	0.0087
92	SLO 15	0.14427	0.32021	-0.02308	-0.2828	-0.1172	-0.0082
92	SLO 16	0.14427	0.32021	-0.02308	-0.2828	-0.1172	-0.0082
92	SLD 1	-0.10819	-0.29578	-0.20087	0.2598	-0.1075	0.008
92	SLD 2	-0.10819	-0.29578	-0.20087	0.2598	-0.1075	0.008
92	SLD 3	-0.10819	0.29588	-0.20082	-0.2613	-0.1075	-0.0076
92	SLD 4	-0.10819	0.29588	-0.20082	-0.2613	-0.1075	-0.0076
92	SLD 5	-0.02853	-0.98605	-0.14486	0.8678	-0.1106	0.0263

Nodo	Cont.	Spostamento			Rotazione		
Ind.	N.br.	ux	uy	uz	rx	ry	rz
92	SLD 6	-0.02853	-0.98605	-0.14486	0.8678	-0.1106	0.0263
92	SLD 7	-0.02855	0.98615	-0.14468	-0.8694	-0.1106	-0.0258
92	SLD 8	-0.02855	0.98615	-0.14468	-0.8694	-0.1106	-0.0258
92	SLD 9	0.03974	-0.98605	-0.09679	0.8678	-0.1132	0.0263
92	SLD 10	0.03974	-0.98605	-0.09679	0.8678	-0.1132	0.0263
92	SLD 11	0.03972	0.98615	-0.09661	-0.8693	-0.1132	-0.0258
92	SLD 12	0.03972	0.98615	-0.09661	-0.8693	-0.1132	-0.0258
92	SLD 13	0.11939	-0.29578	-0.04065	0.2598	-0.1163	0.008
92	SLD 14	0.11939	-0.29578	-0.04065	0.2598	-0.1163	0.008
92	SLD 15	0.11938	0.29588	-0.0406	-0.2613	-0.1162	-0.0076
92	SLD 16	0.11938	0.29588	-0.0406	-0.2613	-0.1162	-0.0076
92	SLV 1	-0.2486	-0.78021	-0.29977	0.6865	-0.1021	0.0208
92	SLV 2	-0.2486	-0.78021	-0.29977	0.6865	-0.1021	0.0208
92	SLV 3	-0.24861	0.7803	-0.29963	-0.688	-0.1021	-0.0204
92	SLV 4	-0.24861	0.7803	-0.29963	-0.688	-0.1021	-0.0204
92	SLV 5	-0.07064	-2.6008	-0.17466	2.2901	-0.109	0.069
92	SLV 6	-0.07064	-2.6008	-0.17466	2.2901	-0.109	0.069
92	SLV 7	-0.07069	2.6009	-0.17419	-2.2917	-0.1089	-0.0685
92	SLV 8	-0.07069	2.6009	-0.17419	-2.2917	-0.1089	-0.0685
92	SLV 9	0.08188	-2.6008	-0.06728	2.2901	-0.1149	0.069
92	SLV 10	0.08188	-2.6008	-0.06728	2.2901	-0.1149	0.069
92	SLV 11	0.08183	2.6009	-0.06681	-2.2917	-0.1148	-0.0685
92	SLV 12	0.08183	2.6009	-0.06681	-2.2917	-0.1148	-0.0685
92	SLV 13	0.2598	-0.78021	0.05816	0.6865	-0.1217	0.0208
92	SLV 14	0.2598	-0.78021	0.05816	0.6865	-0.1217	0.0208
92	SLV 15	0.25979	0.7803	0.0583	-0.688	-0.1216	-0.0204
92	SLV 16	0.25979	0.7803	0.0583	-0.688	-0.1216	-0.0204
93	SLU 1	-0.00542	0.00004	-0.11974	-0.0005	0.1121	-0.0001
93	SLU 2	-0.00542	0.00004	-0.11974	-0.0005	0.1121	-0.0001
93	SLU 3	-0.00542	0.00005	-0.11974	-0.0005	0.1121	-0.0001
93	SLU 4	-0.00542	0.00007	-0.11974	-0.0005	0.1121	-0.0001
93	SLU 5	-0.00542	0.00007	-0.11974	-0.0005	0.1121	-0.0001
93	SLU 6	-0.0065	0.00004	-0.1321	-0.0005	0.1241	-0.0001
93	SLU 7	-0.0065	0.00005	-0.1321	-0.0005	0.1241	-0.0001
93	SLU 8	-0.0065	0.00007	-0.1321	-0.0005	0.1241	-0.0001
93	SLU 9	-0.0065	0.00007	-0.1321	-0.0005	0.1241	-0.0001
93	SLU 10	-0.00759	0.00004	-0.14447	-0.0005	0.1361	-0.0001
93	SLU 11	-0.00759	0.00004	-0.14447	-0.0005	0.1361	-0.0001
93	SLU 12	-0.00759	0.00005	-0.14447	-0.0005	0.1361	-0.0001
93	SLU 13	-0.00759	0.00005	-0.14447	-0.0005	0.1361	-0.0001
93	SLU 14	-0.01684	-0.00009	-0.2062	-0.0005	0.2056	-0.0001
93	SLU 15	-0.01684	-0.00008	-0.2062	-0.0005	0.2056	-0.0001
93	SLU 16	-0.01684	-0.00006	-0.2062	-0.0005	0.2056	-0.0001
93	SLU 17	-0.01684	-0.00006	-0.2062	-0.0005	0.2056	-0.0001
93	SLU 18	-0.01792	-0.00009	-0.21856	-0.0005	0.2176	-0.0001
93	SLU 19	-0.01792	-0.00008	-0.21856	-0.0005	0.2176	-0.0001
93	SLU 20	-0.01792	-0.00006	-0.21856	-0.0005	0.2176	-0.0001
93	SLU 21	-0.01792	-0.00006	-0.21856	-0.0005	0.2176	-0.0001
93	SLU 22	-0.019	-0.00009	-0.23092	-0.0005	0.2296	-0.0001
93	SLU 23	-0.019	-0.00009	-0.23092	-0.0005	0.2296	-0.0001
93	SLU 24	-0.019	-0.00008	-0.23092	-0.0005	0.2296	-0.0001
93	SLU 25	-0.019	-0.00008	-0.23092	-0.0005	0.2296	-0.0001
93	SLU 26	-0.03397	-0.00029	-0.33588	-0.0005	0.3458	-0.0002
93	SLU 27	-0.03397	-0.00029	-0.33588	-0.0005	0.3458	-0.0002
93	SLU 28	-0.03397	-0.00028	-0.33588	-0.0005	0.3458	-0.0002
93	SLU 29	-0.03397	-0.00028	-0.33588	-0.0005	0.3458	-0.0002
93	SLU 30	-0.03505	-0.00029	-0.34825	-0.0005	0.3578	-0.0002
93	SLU 31	-0.03505	-0.00029	-0.34825	-0.0005	0.3578	-0.0002
93	SLU 32	-0.03505	-0.00027	-0.34825	-0.0006	0.3578	-0.0002
93	SLU 33	-0.03505	-0.00027	-0.34825	-0.0005	0.3578	-0.0002
93	SLU 34	-0.00542	0.00004	-0.11974	-0.0005	0.1121	-0.0001
93	SLU 35	-0.00542	0.00004	-0.11974	-0.0005	0.1121	-0.0001
93	SLU 36	-0.00542	0.00005	-0.11974	-0.0005	0.1121	-0.0001
93	SLU 37	-0.00542	0.00007	-0.11974	-0.0005	0.1121	-0.0001
93	SLU 38	-0.00542	0.00007	-0.11974	-0.0005	0.1121	-0.0001
93	SLU 39	-0.0065	0.00004	-0.1321	-0.0005	0.1241	-0.0001
93	SLU 40	-0.0065	0.00005	-0.1321	-0.0005	0.1241	-0.0001
93	SLU 41	-0.0065	0.00007	-0.1321	-0.0005	0.1241	-0.0001
93	SLU 42	-0.0065	0.00007	-0.1321	-0.0005	0.1241	-0.0001
93	SLU 43	-0.00759	0.00004	-0.14447	-0.0005	0.1361	-0.0001
93	SLU 44	-0.00759	0.00004	-0.14447	-0.0005	0.1361	-0.0001
93	SLU 45	-0.00759	0.00005	-0.14447	-0.0005	0.1361	-0.0001
93	SLU 46	-0.00759	0.00005	-0.14447	-0.0005	0.1361	-0.0001
93	SLU 47	-0.01684	-0.00009	-0.2062	-0.0005	0.2056	-0.0001
93	SLU 48	-0.01684	-0.00008	-0.2062	-0.0005	0.2056	-0.0001
93	SLU 49	-0.01684	-0.00006	-0.2062	-0.0005	0.2056	-0.0001
93	SLU 50	-0.01684	-0.00006	-0.2062	-0.0005	0.2056	-0.0001
93	SLU 51	-0.01792	-0.00009	-0.21856	-0.0005	0.2176	-0.0001
93	SLU 52	-0.01792	-0.00008	-0.21856	-0.0005	0.2176	-0.0001
93	SLU 53	-0.01792	-0.00006	-0.21856	-0.0005	0.2176	-0.0001
93	SLU 54	-0.01792	-0.00006	-0.21856	-0.0005	0.2176	-0.0001
93	SLU 55	-0.019	-0.00009	-0.23092	-0.0005	0.2296	-0.0001
93	SLU 56	-0.019	-0.00009	-0.23092	-0.0005	0.2296	-0.0001
93	SLU 57	-0.019	-0.00008	-0.23092	-0.0005	0.2296	-0.0001
93	SLU 58	-0.019	-0.00008	-0.23092	-0.0005	0.2296	-0.0001
93	SLU 59	-0.03397	-0.00029	-0.33588	-0.0005	0.3458	-0.0002
93	SLU 60	-0.03397	-0.00029	-0.33588	-0.0005	0.3458	-0.0002
93	SLU 61	-0.03397	-0.00028	-0.33588	-0.0005	0.3458	-0.0002
93	SLU 62	-0.03397	-0.00028	-0.33588	-0.0005	0.3458	-0.0002
93	SLU 63	-0.03505	-0.00029	-0.34825	-0.0005	0.3578	-0.0002
93	SLU 64	-0.03505	-0.00029	-0.34825	-0.0005	0.3578	-0.0002
93	SLU 65	-0.03505	-0.00027	-0.34825	-0.0006	0.3578	-0.0002
93	SLU 66	-0.03505	-0.00027	-0.34825	-0.0005	0.3578	-0.0002
93	SLU 67	-0.00705	0.00005	-0.15566	-0.0006	0.1457	-0.0001
93	SLU 68	-0.00705	0.00005	-0.15566	-0.0006	0.1457	-0.0001

Nodo	Cont.	Spostamento			Rotazione		
Ind.	N.br.	ux	uy	uz	rx	ry	rz
93	SLU 69	-0.00705	0.00006	-0.15566	-0.0006	0.1457	-0.0001
93	SLU 70	-0.00705	0.00008	-0.15566	-0.0006	0.1457	-0.0001
93	SLU 71	-0.00705	0.00008	-0.15566	-0.0006	0.1457	-0.0001
93	SLU 72	-0.00813	0.00005	-0.16802	-0.0006	0.1577	-0.0001
93	SLU 73	-0.00813	0.00006	-0.16802	-0.0006	0.1577	-0.0001
93	SLU 74	-0.00813	0.00008	-0.16802	-0.0006	0.1577	-0.0001
93	SLU 75	-0.00813	0.00008	-0.16802	-0.0006	0.1577	-0.0001
93	SLU 76	-0.00921	0.00005	-0.18039	-0.0006	0.1697	-0.0001
93	SLU 77	-0.00921	0.00005	-0.18039	-0.0006	0.1697	-0.0001
93	SLU 78	-0.00921	0.00007	-0.18039	-0.0006	0.1697	-0.0001
93	SLU 79	-0.00921	0.00007	-0.18039	-0.0006	0.1697	-0.0001
93	SLU 80	-0.01847	-0.00008	-0.24212	-0.0006	0.2392	-0.0002
93	SLU 81	-0.01847	-0.00007	-0.24212	-0.0006	0.2392	-0.0002
93	SLU 82	-0.01847	-0.00005	-0.24212	-0.0006	0.2392	-0.0002
93	SLU 83	-0.01847	-0.00005	-0.24212	-0.0006	0.2392	-0.0002
93	SLU 84	-0.01955	-0.00008	-0.25448	-0.0006	0.2512	-0.0002
93	SLU 85	-0.01955	-0.00007	-0.25448	-0.0006	0.2512	-0.0002
93	SLU 86	-0.01955	-0.00005	-0.25448	-0.0007	0.2512	-0.0002
93	SLU 87	-0.01955	-0.00005	-0.25448	-0.0007	0.2512	-0.0002
93	SLU 88	-0.02063	-0.00008	-0.26685	-0.0007	0.2632	-0.0002
93	SLU 89	-0.02063	-0.00008	-0.26685	-0.0007	0.2632	-0.0002
93	SLU 90	-0.02063	-0.00006	-0.26685	-0.0007	0.2632	-0.0002
93	SLU 91	-0.02063	-0.00006	-0.26685	-0.0007	0.2632	-0.0002
93	SLU 92	-0.03559	-0.00028	-0.37181	-0.0007	0.3794	-0.0002
93	SLU 93	-0.03559	-0.00028	-0.37181	-0.0007	0.3794	-0.0002
93	SLU 94	-0.03559	-0.00026	-0.37181	-0.0007	0.3794	-0.0002
93	SLU 95	-0.03559	-0.00026	-0.37181	-0.0007	0.3794	-0.0002
93	SLU 96	-0.03667	-0.00027	-0.38417	-0.0007	0.3914	-0.0002
93	SLU 97	-0.03667	-0.00027	-0.38417	-0.0007	0.3914	-0.0002
93	SLU 98	-0.03667	-0.00026	-0.38417	-0.0007	0.3914	-0.0002
93	SLU 99	-0.03667	-0.00026	-0.38417	-0.0007	0.3914	-0.0002
93	SLU 100	-0.00705	0.00005	-0.15566	-0.0006	0.1457	-0.0001
93	SLU 101	-0.00705	0.00005	-0.15566	-0.0006	0.1457	-0.0001
93	SLU 102	-0.00705	0.00006	-0.15566	-0.0006	0.1457	-0.0001
93	SLU 103	-0.00705	0.00008	-0.15566	-0.0006	0.1457	-0.0001
93	SLU 104	-0.00705	0.00008	-0.15566	-0.0006	0.1457	-0.0001
93	SLU 105	-0.00813	0.00005	-0.16802	-0.0006	0.1577	-0.0001
93	SLU 106	-0.00813	0.00006	-0.16802	-0.0006	0.1577	-0.0001
93	SLU 107	-0.00813	0.00008	-0.16802	-0.0006	0.1577	-0.0001
93	SLU 108	-0.00813	0.00008	-0.16802	-0.0006	0.1577	-0.0001
93	SLU 109	-0.00921	0.00005	-0.18039	-0.0006	0.1697	-0.0001
93	SLU 110	-0.00921	0.00005	-0.18039	-0.0006	0.1697	-0.0001
93	SLU 111	-0.00921	0.00007	-0.18039	-0.0006	0.1697	-0.0001
93	SLU 112	-0.00921	0.00007	-0.18039	-0.0006	0.1697	-0.0001
93	SLU 113	-0.01847	-0.00008	-0.24212	-0.0006	0.2392	-0.0002
93	SLU 114	-0.01847	-0.00007	-0.24212	-0.0006	0.2392	-0.0002
93	SLU 115	-0.01847	-0.00005	-0.24212	-0.0006	0.2392	-0.0002
93	SLU 116	-0.01847	-0.00005	-0.24212	-0.0006	0.2392	-0.0002
93	SLU 117	-0.01955	-0.00008	-0.25448	-0.0006	0.2512	-0.0002
93	SLU 118	-0.01955	-0.00007	-0.25448	-0.0006	0.2512	-0.0002
93	SLU 119	-0.01955	-0.00005	-0.25448	-0.0007	0.2512	-0.0002
93	SLU 120	-0.01955	-0.00005	-0.25448	-0.0007	0.2512	-0.0002
93	SLU 121	-0.02063	-0.00008	-0.26685	-0.0007	0.2632	-0.0002
93	SLU 122	-0.02063	-0.00008	-0.26685	-0.0007	0.2632	-0.0002
93	SLU 123	-0.02063	-0.00006	-0.26685	-0.0007	0.2632	-0.0002
93	SLU 124	-0.02063	-0.00006	-0.26685	-0.0007	0.2632	-0.0002
93	SLU 125	-0.03559	-0.00028	-0.37181	-0.0007	0.3794	-0.0002
93	SLU 126	-0.03559	-0.00028	-0.37181	-0.0007	0.3794	-0.0002
93	SLU 127	-0.03559	-0.00026	-0.37181	-0.0007	0.3794	-0.0002
93	SLU 128	-0.03559	-0.00026	-0.37181	-0.0007	0.3794	-0.0002
93	SLU 129	-0.03667	-0.00027	-0.38417	-0.0007	0.3914	-0.0002
93	SLU 130	-0.03667	-0.00027	-0.38417	-0.0007	0.3914	-0.0002
93	SLU 131	-0.03667	-0.00026	-0.38417	-0.0007	0.3914	-0.0002
93	SLU 132	-0.03667	-0.00026	-0.38417	-0.0007	0.3914	-0.0002
93	SLE RA 1	-0.00542	0.00004	-0.11974	-0.0005	0.1121	-0.0001
93	SLE RA 2	-0.00542	0.00004	-0.11974	-0.0005	0.1121	-0.0001
93	SLE RA 3	-0.00542	0.00005	-0.11974	-0.0005	0.1121	-0.0001
93	SLE RA 4	-0.00542	0.00006	-0.11974	-0.0005	0.1121	-0.0001
93	SLE RA 5	-0.00542	0.00006	-0.11974	-0.0005	0.1121	-0.0001
93	SLE RA 6	-0.00614	0.00004	-0.12798	-0.0005	0.1201	-0.0001
93	SLE RA 7	-0.00614	0.00005	-0.12798	-0.0005	0.1201	-0.0001
93	SLE RA 8	-0.00614	0.00006	-0.12798	-0.0005	0.1201	-0.0001
93	SLE RA 9	-0.00614	0.00006	-0.12798	-0.0005	0.1201	-0.0001
93	SLE RA 10	-0.00687	0.00004	-0.13622	-0.0005	0.1281	-0.0001
93	SLE RA 11	-0.00687	0.00004	-0.13622	-0.0005	0.1281	-0.0001
93	SLE RA 12	-0.00687	0.00005	-0.13622	-0.0005	0.1281	-0.0001
93	SLE RA 13	-0.00687	0.00005	-0.13622	-0.0005	0.1281	-0.0001
93	SLE RA 14	-0.01303	-0.00005	-0.17738	-0.0005	0.1744	-0.0001
93	SLE RA 15	-0.01303	-0.00004	-0.17738	-0.0005	0.1744	-0.0001
93	SLE RA 16	-0.01303	-0.00003	-0.17738	-0.0005	0.1744	-0.0001
93	SLE RA 17	-0.01303	-0.00003	-0.17738	-0.0005	0.1744	-0.0001
93	SLE RA 18	-0.01376	-0.00005	-0.18562	-0.0005	0.1824	-0.0001
93	SLE RA 19	-0.01376	-0.00004	-0.18562	-0.0005	0.1824	-0.0001
93	SLE RA 20	-0.01376	-0.00003	-0.18562	-0.0005	0.1824	-0.0001
93	SLE RA 21	-0.01376	-0.00003	-0.18562	-0.0005	0.1824	-0.0001
93	SLE RA 22	-0.01448	-0.00005	-0.19386	-0.0005	0.1904	-0.0001
93	SLE RA 23	-0.01448	-0.00005	-0.19386	-0.0005	0.1904	-0.0001
93	SLE RA 24	-0.01448	-0.00004	-0.19386	-0.0005	0.1904	-0.0001
93	SLE RA 25	-0.01448	-0.00004	-0.19386	-0.0005	0.1904	-0.0001
93	SLE RA 26	-0.02445	-0.00018	-0.26384	-0.0005	0.2679	-0.0001
93	SLE RA 27	-0.02445	-0.00018	-0.26384	-0.0005	0.2679	-0.0001
93	SLE RA 28	-0.02445	-0.00017	-0.26384	-0.0005	0.2679	-0.0001
93	SLE RA 29	-0.02445	-0.00017	-0.26384	-0.0005	0.2679	-0.0001
93	SLE RA 30	-0.02517	-0.00018	-0.27208	-0.0005	0.2759	-0.0001
93	SLE RA 31	-0.02517	-0.00018	-0.27208	-0.0005	0.2759	-0.0001

Nodo	Cont.	Spostamento			Rotazione		
Ind.	N.br.	ux	uy	uz	rx	ry	rz
93	SLE RA 32	-0.02517	-0.00017	-0.27208	-0.0005	0.2759	-0.0001
93	SLE RA 33	-0.02517	-0.00017	-0.27208	-0.0005	0.2759	-0.0001
93	SLE FR 1	-0.00542	0.00004	-0.11974	-0.0005	0.1121	-0.0001
93	SLE FR 2	-0.00542	0.00004	-0.11974	-0.0005	0.1121	-0.0001
93	SLE FR 3	-0.00542	0.00005	-0.11974	-0.0005	0.1121	-0.0001
93	SLE FR 4	-0.00571	0.00004	-0.12304	-0.0005	0.1153	-0.0001
93	SLE FR 5	-0.01303	-0.00005	-0.17738	-0.0005	0.1744	-0.0001
93	SLE QP 1	-0.00542	0.00004	-0.11974	-0.0005	0.1121	-0.0001
93	SLO 1	-0.14664	-0.32014	-0.02032	0.2817	0.1175	-0.0085
93	SLO 2	-0.14664	-0.32014	-0.02032	0.2817	0.1175	-0.0085
93	SLO 3	-0.14664	0.32022	-0.02032	-0.2826	0.1175	0.0083
93	SLO 4	-0.14664	0.32022	-0.02032	-0.2826	0.1175	0.0083
93	SLO 5	-0.04779	-1.06724	-0.08991	0.9401	0.1137	-0.0281
93	SLO 6	-0.04779	-1.06724	-0.08991	0.9401	0.1137	-0.0281
93	SLO 7	-0.04779	1.06732	-0.08991	-0.941	0.1137	0.0279
93	SLO 8	-0.04779	1.06732	-0.08991	-0.941	0.1137	0.0279
93	SLO 9	0.03694	-1.06724	-0.14956	0.9401	0.1104	-0.0281
93	SLO 10	0.03694	-1.06724	-0.14956	0.9401	0.1104	-0.0281
93	SLO 11	0.03694	1.06732	-0.14956	-0.941	0.1104	0.0279
93	SLO 12	0.03694	1.06732	-0.14956	-0.941	0.1104	0.0279
93	SLO 13	0.1358	-0.32014	-0.21916	0.2817	0.1067	-0.0085
93	SLO 14	0.1358	-0.32014	-0.21916	0.2817	0.1067	-0.0085
93	SLO 15	0.1358	0.32022	-0.21916	-0.2826	0.1067	0.0083
93	SLO 16	0.1358	0.32022	-0.21916	-0.2826	0.1067	0.0083
93	SLD 1	-0.1213	-0.29581	-0.03816	0.2603	0.1165	-0.0079
93	SLD 2	-0.1213	-0.29581	-0.03816	0.2603	0.1165	-0.0079
93	SLD 3	-0.1213	0.29588	-0.03816	-0.2612	0.1165	0.0077
93	SLD 4	-0.1213	0.29588	-0.03816	-0.2612	0.1165	0.0077
93	SLD 5	-0.04018	-0.98611	-0.09527	0.8686	0.1134	-0.026
93	SLD 6	-0.04018	-0.98611	-0.09527	0.8686	0.1134	-0.026
93	SLD 7	-0.04018	0.98619	-0.09527	-0.8695	0.1134	0.0258
93	SLD 8	-0.04018	0.98619	-0.09527	-0.8695	0.1134	0.0258
93	SLD 9	0.02934	-0.98611	-0.14421	0.8686	0.1107	-0.026
93	SLD 10	0.02934	-0.98611	-0.14421	0.8686	0.1107	-0.026
93	SLD 11	0.02934	0.98619	-0.14421	-0.8695	0.1107	0.0258
93	SLD 12	0.02934	0.98619	-0.14421	-0.8695	0.1107	0.0258
93	SLD 13	0.11046	-0.29581	-0.20132	0.2603	0.1076	-0.0079
93	SLD 14	0.11046	-0.29581	-0.20132	0.2603	0.1076	-0.0079
93	SLD 15	0.11046	0.29589	-0.20132	-0.2612	0.1076	0.0077
93	SLD 16	0.11046	0.29589	-0.20132	-0.2612	0.1076	0.0077
93	SLV 1	-0.26429	-0.78026	0.0625	0.6872	0.122	-0.0206
93	SLV 2	-0.26429	-0.78026	0.0625	0.6872	0.122	-0.0206
93	SLV 3	-0.26429	0.78034	0.0625	-0.6881	0.122	0.0204
93	SLV 4	-0.26429	0.78034	0.0625	-0.6881	0.122	0.0204
93	SLV 5	-0.08308	-2.60095	-0.06507	2.2917	0.1151	-0.0684
93	SLV 6	-0.08308	-2.60095	-0.06507	2.2917	0.1151	-0.0684
93	SLV 7	-0.08308	2.60103	-0.06507	-2.2926	0.1151	0.0682
93	SLV 8	-0.08308	2.60103	-0.06507	-2.2926	0.1151	0.0682
93	SLV 9	0.07224	-2.60095	-0.17441	2.2917	0.1091	-0.0684
93	SLV 10	0.07224	-2.60095	-0.17441	2.2917	0.1091	-0.0684
93	SLV 11	0.07224	2.60103	-0.17441	-2.2926	0.1091	0.0682
93	SLV 12	0.07224	2.60103	-0.17441	-2.2926	0.1091	0.0682
93	SLV 13	0.25345	-0.78026	-0.30198	0.6872	0.1021	-0.0206
93	SLV 14	0.25345	-0.78026	-0.30198	0.6872	0.1021	-0.0206
93	SLV 15	0.25345	0.78034	-0.30198	-0.6881	0.1021	0.0204
93	SLV 16	0.25345	0.78034	-0.30198	-0.6881	0.1021	0.0204
94	SLU 1	0.00542	0.00004	-0.11974	-0.0005	-0.1121	0.0001
94	SLU 2	0.00542	0.00004	-0.11974	-0.0005	-0.1121	0.0001
94	SLU 3	0.00542	0.00005	-0.11974	-0.0005	-0.1121	0.0001
94	SLU 4	0.00542	0.00007	-0.11974	-0.0005	-0.1121	0.0001
94	SLU 5	0.00542	0.00007	-0.11974	-0.0005	-0.1121	0.0001
94	SLU 6	0.00673	0.00004	-0.13192	-0.0005	-0.1241	0.0001
94	SLU 7	0.00673	0.00005	-0.13192	-0.0005	-0.1241	0.0001
94	SLU 8	0.00673	0.00007	-0.13192	-0.0005	-0.1241	0.0001
94	SLU 9	0.00673	0.00007	-0.13192	-0.0005	-0.1241	0.0001
94	SLU 10	0.00803	0.00004	-0.1441	-0.0005	-0.1361	0.0001
94	SLU 11	0.00803	0.00004	-0.1441	-0.0005	-0.1361	0.0001
94	SLU 12	0.00803	0.00005	-0.1441	-0.0005	-0.1361	0.0001
94	SLU 13	0.00803	0.00005	-0.1441	-0.0005	-0.1361	0.0001
94	SLU 14	0.01721	-0.00009	-0.20589	-0.0005	-0.2056	0.0001
94	SLU 15	0.01721	-0.00008	-0.20589	-0.0005	-0.2056	0.0001
94	SLU 16	0.01721	-0.00006	-0.20589	-0.0005	-0.2056	0.0001
94	SLU 17	0.01721	-0.00006	-0.20589	-0.0005	-0.2056	0.0001
94	SLU 18	0.01852	-0.00009	-0.21807	-0.0005	-0.2176	0.0001
94	SLU 19	0.01852	-0.00008	-0.21807	-0.0005	-0.2176	0.0001
94	SLU 20	0.01852	-0.00006	-0.21807	-0.0005	-0.2176	0.0001
94	SLU 21	0.01852	-0.00006	-0.21807	-0.0005	-0.2176	0.0001
94	SLU 22	0.01982	-0.00009	-0.23025	-0.0005	-0.2296	0.0001
94	SLU 23	0.01982	-0.00009	-0.23025	-0.0005	-0.2296	0.0001
94	SLU 24	0.01982	-0.00008	-0.23025	-0.0005	-0.2296	0.0001
94	SLU 25	0.01982	-0.00008	-0.23025	-0.0005	-0.2296	0.0001
94	SLU 26	0.03489	-0.00029	-0.33512	-0.0005	-0.3458	0.0002
94	SLU 27	0.03489	-0.00029	-0.33512	-0.0005	-0.3458	0.0002
94	SLU 28	0.03489	-0.00028	-0.33512	-0.0005	-0.3458	0.0002
94	SLU 29	0.03489	-0.00028	-0.33512	-0.0005	-0.3458	0.0002
94	SLU 30	0.0362	-0.00029	-0.3473	-0.0005	-0.3578	0.0002
94	SLU 31	0.0362	-0.00029	-0.3473	-0.0005	-0.3578	0.0002
94	SLU 32	0.0362	-0.00027	-0.3473	-0.0006	-0.3578	0.0002
94	SLU 33	0.0362	-0.00027	-0.3473	-0.0005	-0.3578	0.0002
94	SLU 34	0.00542	0.00004	-0.11974	-0.0005	-0.1121	0.0001
94	SLU 35	0.00542	0.00004	-0.11974	-0.0005	-0.1121	0.0001
94	SLU 36	0.00542	0.00005	-0.11974	-0.0005	-0.1121	0.0001
94	SLU 37	0.00542	0.00007	-0.11974	-0.0005	-0.1121	0.0001
94	SLU 38	0.00542	0.00007	-0.11974	-0.0005	-0.1121	0.0001
94	SLU 39	0.00673	0.00004	-0.13192	-0.0005	-0.1241	0.0001

Nodo	Cont.	Spostamento			Rotazione		
Ind.	N.br.	ux	uy	uz	rx	ry	rz
94	SLU 40	0.00673	0.00005	-0.13192	-0.0005	-0.1241	0.0001
94	SLU 41	0.00673	0.00007	-0.13192	-0.0005	-0.1241	0.0001
94	SLU 42	0.00673	0.00007	-0.13192	-0.0005	-0.1241	0.0001
94	SLU 43	0.00803	0.00004	-0.1441	-0.0005	-0.1361	0.0001
94	SLU 44	0.00803	0.00004	-0.1441	-0.0005	-0.1361	0.0001
94	SLU 45	0.00803	0.00005	-0.1441	-0.0005	-0.1361	0.0001
94	SLU 46	0.00803	0.00005	-0.1441	-0.0005	-0.1361	0.0001
94	SLU 47	0.01721	-0.00009	-0.20589	-0.0005	-0.2056	0.0001
94	SLU 48	0.01721	-0.00008	-0.20589	-0.0005	-0.2056	0.0001
94	SLU 49	0.01721	-0.00006	-0.20589	-0.0005	-0.2056	0.0001
94	SLU 50	0.01721	-0.00006	-0.20589	-0.0005	-0.2056	0.0001
94	SLU 51	0.01852	-0.00009	-0.21807	-0.0005	-0.2176	0.0001
94	SLU 52	0.01852	-0.00008	-0.21807	-0.0005	-0.2176	0.0001
94	SLU 53	0.01852	-0.00006	-0.21807	-0.0005	-0.2176	0.0001
94	SLU 54	0.01852	-0.00006	-0.21807	-0.0005	-0.2176	0.0001
94	SLU 55	0.01982	-0.00009	-0.23025	-0.0005	-0.2296	0.0001
94	SLU 56	0.01982	-0.00009	-0.23025	-0.0005	-0.2296	0.0001
94	SLU 57	0.01982	-0.00008	-0.23025	-0.0005	-0.2296	0.0001
94	SLU 58	0.01982	-0.00008	-0.23025	-0.0005	-0.2296	0.0001
94	SLU 59	0.03489	-0.00029	-0.33512	-0.0005	-0.3458	0.0002
94	SLU 60	0.03489	-0.00029	-0.33512	-0.0005	-0.3458	0.0002
94	SLU 61	0.03489	-0.00028	-0.33512	-0.0005	-0.3458	0.0002
94	SLU 62	0.03489	-0.00028	-0.33512	-0.0005	-0.3458	0.0002
94	SLU 63	0.0362	-0.00029	-0.3473	-0.0005	-0.3578	0.0002
94	SLU 64	0.0362	-0.00029	-0.3473	-0.0005	-0.3578	0.0002
94	SLU 65	0.0362	-0.00027	-0.3473	-0.0006	-0.3578	0.0002
94	SLU 66	0.0362	-0.00027	-0.3473	-0.0005	-0.3578	0.0002
94	SLU 67	0.00705	0.00005	-0.15566	-0.0006	-0.1457	0.0001
94	SLU 68	0.00705	0.00005	-0.15566	-0.0006	-0.1457	0.0001
94	SLU 69	0.00705	0.00006	-0.15566	-0.0006	-0.1457	0.0001
94	SLU 70	0.00705	0.00008	-0.15566	-0.0006	-0.1457	0.0001
94	SLU 71	0.00705	0.00008	-0.15566	-0.0006	-0.1457	0.0001
94	SLU 72	0.00835	0.00005	-0.16784	-0.0006	-0.1577	0.0001
94	SLU 73	0.00835	0.00006	-0.16784	-0.0006	-0.1577	0.0001
94	SLU 74	0.00835	0.00008	-0.16784	-0.0006	-0.1577	0.0001
94	SLU 75	0.00835	0.00008	-0.16784	-0.0006	-0.1577	0.0001
94	SLU 76	0.00966	0.00005	-0.18002	-0.0006	-0.1697	0.0001
94	SLU 77	0.00966	0.00005	-0.18002	-0.0006	-0.1697	0.0001
94	SLU 78	0.00966	0.00007	-0.18002	-0.0006	-0.1697	0.0001
94	SLU 79	0.00966	0.00007	-0.18002	-0.0006	-0.1697	0.0001
94	SLU 80	0.01884	-0.00008	-0.24181	-0.0006	-0.2392	0.0002
94	SLU 81	0.01884	-0.00007	-0.24181	-0.0006	-0.2392	0.0002
94	SLU 82	0.01884	-0.00005	-0.24181	-0.0006	-0.2392	0.0002
94	SLU 83	0.01884	-0.00005	-0.24181	-0.0006	-0.2392	0.0002
94	SLU 84	0.02014	-0.00008	-0.25399	-0.0006	-0.2512	0.0002
94	SLU 85	0.02014	-0.00007	-0.25399	-0.0006	-0.2512	0.0002
94	SLU 86	0.02014	-0.00005	-0.25399	-0.0007	-0.2512	0.0002
94	SLU 87	0.02014	-0.00005	-0.25399	-0.0007	-0.2512	0.0002
94	SLU 88	0.02145	-0.00008	-0.26618	-0.0007	-0.2632	0.0002
94	SLU 89	0.02145	-0.00008	-0.26618	-0.0007	-0.2632	0.0002
94	SLU 90	0.02145	-0.00006	-0.26618	-0.0007	-0.2632	0.0002
94	SLU 91	0.02145	-0.00007	-0.26618	-0.0007	-0.2632	0.0002
94	SLU 92	0.03652	-0.00028	-0.37104	-0.0007	-0.3794	0.0002
94	SLU 93	0.03652	-0.00028	-0.37104	-0.0007	-0.3794	0.0002
94	SLU 94	0.03652	-0.00026	-0.37104	-0.0007	-0.3794	0.0002
94	SLU 95	0.03652	-0.00026	-0.37104	-0.0007	-0.3794	0.0002
94	SLU 96	0.03782	-0.00027	-0.38322	-0.0007	-0.3914	0.0002
94	SLU 97	0.03782	-0.00027	-0.38322	-0.0007	-0.3914	0.0002
94	SLU 98	0.03782	-0.00026	-0.38322	-0.0007	-0.3914	0.0002
94	SLU 99	0.03782	-0.00026	-0.38322	-0.0007	-0.3914	0.0002
94	SLU 100	0.00705	0.00005	-0.15566	-0.0006	-0.1457	0.0001
94	SLU 101	0.00705	0.00005	-0.15566	-0.0006	-0.1457	0.0001
94	SLU 102	0.00705	0.00006	-0.15566	-0.0006	-0.1457	0.0001
94	SLU 103	0.00705	0.00008	-0.15566	-0.0006	-0.1457	0.0001
94	SLU 104	0.00705	0.00008	-0.15566	-0.0006	-0.1457	0.0001
94	SLU 105	0.00835	0.00005	-0.16784	-0.0006	-0.1577	0.0001
94	SLU 106	0.00835	0.00006	-0.16784	-0.0006	-0.1577	0.0001
94	SLU 107	0.00835	0.00008	-0.16784	-0.0006	-0.1577	0.0001
94	SLU 108	0.00835	0.00008	-0.16784	-0.0006	-0.1577	0.0001
94	SLU 109	0.00966	0.00005	-0.18002	-0.0006	-0.1697	0.0001
94	SLU 110	0.00966	0.00005	-0.18002	-0.0006	-0.1697	0.0001
94	SLU 111	0.00966	0.00007	-0.18002	-0.0006	-0.1697	0.0001
94	SLU 112	0.00966	0.00007	-0.18002	-0.0006	-0.1697	0.0001
94	SLU 113	0.01884	-0.00008	-0.24181	-0.0006	-0.2392	0.0002
94	SLU 114	0.01884	-0.00007	-0.24181	-0.0006	-0.2392	0.0002
94	SLU 115	0.01884	-0.00005	-0.24181	-0.0006	-0.2392	0.0002
94	SLU 116	0.01884	-0.00005	-0.24181	-0.0006	-0.2392	0.0002
94	SLU 117	0.02014	-0.00008	-0.25399	-0.0006	-0.2512	0.0002
94	SLU 118	0.02014	-0.00007	-0.25399	-0.0006	-0.2512	0.0002
94	SLU 119	0.02014	-0.00005	-0.25399	-0.0007	-0.2512	0.0002
94	SLU 120	0.02014	-0.00005	-0.25399	-0.0007	-0.2512	0.0002
94	SLU 121	0.02145	-0.00008	-0.26618	-0.0007	-0.2632	0.0002
94	SLU 122	0.02145	-0.00008	-0.26618	-0.0007	-0.2632	0.0002
94	SLU 123	0.02145	-0.00006	-0.26618	-0.0007	-0.2632	0.0002
94	SLU 124	0.02145	-0.00007	-0.26618	-0.0007	-0.2632	0.0002
94	SLU 125	0.03652	-0.00028	-0.37104	-0.0007	-0.3794	0.0002
94	SLU 126	0.03652	-0.00028	-0.37104	-0.0007	-0.3794	0.0002
94	SLU 127	0.03652	-0.00026	-0.37104	-0.0007	-0.3794	0.0002
94	SLU 128	0.03652	-0.00026	-0.37104	-0.0007	-0.3794	0.0002
94	SLU 129	0.03782	-0.00027	-0.38322	-0.0007	-0.3914	0.0002
94	SLU 130	0.03782	-0.00027	-0.38322	-0.0007	-0.3914	0.0002
94	SLU 131	0.03782	-0.00026	-0.38322	-0.0007	-0.3914	0.0002
94	SLU 132	0.03782	-0.00026	-0.38322	-0.0007	-0.3914	0.0002
94	SLE RA 1	0.00542	0.00004	-0.11974	-0.0005	-0.1121	0.0001
94	SLE RA 2	0.00542	0.00004	-0.11974	-0.0005	-0.1121	0.0001

Nodo	Cont.	Spostamento			Rotazione		
Ind.	N.br.	ux	uy	uz	rx	ry	rz
94	SLE RA 3	0.00542	0.00005	-0.11974	-0.0005	-0.1121	0.0001
94	SLE RA 4	0.00542	0.00006	-0.11974	-0.0005	-0.1121	0.0001
94	SLE RA 5	0.00542	0.00006	-0.11974	-0.0005	-0.1121	0.0001
94	SLE RA 6	0.00629	0.00004	-0.12786	-0.0005	-0.1201	0.0001
94	SLE RA 7	0.00629	0.00005	-0.12786	-0.0005	-0.1201	0.0001
94	SLE RA 8	0.00629	0.00006	-0.12786	-0.0005	-0.1201	0.0001
94	SLE RA 9	0.00629	0.00006	-0.12786	-0.0005	-0.1201	0.0001
94	SLE RA 10	0.00716	0.00004	-0.13598	-0.0005	-0.1281	0.0001
94	SLE RA 11	0.00716	0.00004	-0.13598	-0.0005	-0.1281	0.0001
94	SLE RA 12	0.00716	0.00005	-0.13598	-0.0005	-0.1281	0.0001
94	SLE RA 13	0.00716	0.00005	-0.13598	-0.0005	-0.1281	0.0001
94	SLE RA 14	0.01328	-0.00005	-0.17717	-0.0005	-0.1744	0.0001
94	SLE RA 15	0.01328	-0.00004	-0.17717	-0.0005	-0.1744	0.0001
94	SLE RA 16	0.01328	-0.00003	-0.17717	-0.0005	-0.1744	0.0001
94	SLE RA 17	0.01328	-0.00003	-0.17717	-0.0005	-0.1744	0.0001
94	SLE RA 18	0.01415	-0.00005	-0.1853	-0.0005	-0.1824	0.0001
94	SLE RA 19	0.01415	-0.00004	-0.1853	-0.0005	-0.1824	0.0001
94	SLE RA 20	0.01415	-0.00003	-0.1853	-0.0005	-0.1824	0.0001
94	SLE RA 21	0.01415	-0.00003	-0.1853	-0.0005	-0.1824	0.0001
94	SLE RA 22	0.01502	-0.00005	-0.19342	-0.0005	-0.1904	0.0001
94	SLE RA 23	0.01502	-0.00005	-0.19342	-0.0005	-0.1904	0.0001
94	SLE RA 24	0.01502	-0.00004	-0.19342	-0.0005	-0.1904	0.0001
94	SLE RA 25	0.01502	-0.00004	-0.19342	-0.0005	-0.1904	0.0001
94	SLE RA 26	0.02507	-0.00018	-0.26333	-0.0005	-0.2679	0.0001
94	SLE RA 27	0.02507	-0.00018	-0.26333	-0.0005	-0.2679	0.0001
94	SLE RA 28	0.02507	-0.00017	-0.26333	-0.0005	-0.2679	0.0001
94	SLE RA 29	0.02507	-0.00017	-0.26333	-0.0005	-0.2679	0.0001
94	SLE RA 30	0.02594	-0.00018	-0.27145	-0.0005	-0.2759	0.0001
94	SLE RA 31	0.02594	-0.00018	-0.27145	-0.0005	-0.2759	0.0001
94	SLE RA 32	0.02594	-0.00017	-0.27145	-0.0005	-0.2759	0.0001
94	SLE RA 33	0.02594	-0.00017	-0.27145	-0.0005	-0.2759	0.0001
94	SLE FR 1	0.00542	0.00004	-0.11974	-0.0005	-0.1121	0.0001
94	SLE FR 2	0.00542	0.00004	-0.11974	-0.0005	-0.1121	0.0001
94	SLE FR 3	0.00542	0.00005	-0.11974	-0.0005	-0.1121	0.0001
94	SLE FR 4	0.00577	0.00004	-0.12299	-0.0005	-0.1153	0.0001
94	SLE FR 5	0.01328	-0.00005	-0.17717	-0.0005	-0.1744	0.0001
94	SLE QP 1	0.00542	0.00004	-0.11974	-0.0005	-0.1121	0.0001
94	SLO 1	-0.1358	-0.32014	-0.21916	0.2817	-0.1067	0.0085
94	SLO 2	-0.1358	-0.32014	-0.21916	0.2817	-0.1067	0.0085
94	SLO 3	-0.1358	0.32022	-0.21916	-0.2826	-0.1067	-0.0083
94	SLO 4	-0.1358	0.32022	-0.21916	-0.2826	-0.1067	-0.0083
94	SLO 5	-0.03694	-1.06724	-0.14956	0.9401	-0.1104	0.0281
94	SLO 6	-0.03694	-1.06724	-0.14956	0.9401	-0.1104	0.0281
94	SLO 7	-0.03694	1.06732	-0.14956	-0.941	-0.1104	-0.0279
94	SLO 8	-0.03694	1.06732	-0.14956	-0.941	-0.1104	-0.0279
94	SLO 9	0.04779	-1.06724	-0.08991	0.9401	-0.1137	0.0281
94	SLO 10	0.04779	-1.06724	-0.08991	0.9401	-0.1137	0.0281
94	SLO 11	0.04779	1.06732	-0.08991	-0.941	-0.1137	-0.0279
94	SLO 12	0.04779	1.06732	-0.08991	-0.941	-0.1137	-0.0279
94	SLO 13	0.14664	-0.32014	-0.02032	0.2817	-0.1175	0.0085
94	SLO 14	0.14664	-0.32014	-0.02032	0.2817	-0.1175	0.0085
94	SLO 15	0.14664	0.32022	-0.02032	-0.2826	-0.1175	-0.0083
94	SLO 16	0.14664	0.32022	-0.02032	-0.2826	-0.1175	-0.0083
94	SLD 1	-0.11046	-0.29581	-0.20132	0.2603	-0.1076	0.0079
94	SLD 2	-0.11046	-0.29581	-0.20132	0.2603	-0.1076	0.0079
94	SLD 3	-0.11046	0.29589	-0.20132	-0.2612	-0.1076	-0.0077
94	SLD 4	-0.11046	0.29589	-0.20132	-0.2612	-0.1076	-0.0077
94	SLD 5	-0.02934	-0.98611	-0.14421	0.8686	-0.1107	0.026
94	SLD 6	-0.02934	-0.98611	-0.14421	0.8686	-0.1107	0.026
94	SLD 7	-0.02934	0.98619	-0.14421	-0.8695	-0.1107	-0.0258
94	SLD 8	-0.02934	0.98619	-0.14421	-0.8695	-0.1107	-0.0258
94	SLD 9	0.04018	-0.98611	-0.09527	0.8686	-0.1134	0.026
94	SLD 10	0.04018	-0.98611	-0.09527	0.8686	-0.1134	0.026
94	SLD 11	0.04018	0.98619	-0.09527	-0.8695	-0.1134	-0.0258
94	SLD 12	0.04018	0.98619	-0.09527	-0.8695	-0.1134	-0.0258
94	SLD 13	0.1213	-0.29581	-0.03816	0.2603	-0.1165	0.0079
94	SLD 14	0.1213	-0.29581	-0.03816	0.2603	-0.1165	0.0079
94	SLD 15	0.1213	0.29588	-0.03816	-0.2612	-0.1165	-0.0077
94	SLD 16	0.1213	0.29588	-0.03816	-0.2612	-0.1165	-0.0077
94	SLV 1	-0.25345	-0.78026	-0.30198	0.6872	-0.1021	0.0206
94	SLV 2	-0.25345	-0.78026	-0.30198	0.6872	-0.1021	0.0206
94	SLV 3	-0.25345	0.78034	-0.30198	-0.6881	-0.1021	-0.0204
94	SLV 4	-0.25345	0.78034	-0.30198	-0.6881	-0.1021	-0.0204
94	SLV 5	-0.07224	-2.60095	-0.17441	2.2917	-0.1091	0.0684
94	SLV 6	-0.07224	-2.60095	-0.17441	2.2917	-0.1091	0.0684
94	SLV 7	-0.07224	2.60103	-0.17441	-2.2926	-0.1091	-0.0682
94	SLV 8	-0.07224	2.60103	-0.17441	-2.2926	-0.1091	-0.0682
94	SLV 9	0.08308	-2.60095	-0.06507	2.2917	-0.1151	0.0684
94	SLV 10	0.08308	-2.60095	-0.06507	2.2917	-0.1151	0.0684
94	SLV 11	0.08308	2.60103	-0.06507	-2.2926	-0.1151	-0.0682
94	SLV 12	0.08308	2.60103	-0.06507	-2.2926	-0.1151	-0.0682
94	SLV 13	0.26429	-0.78026	0.0625	0.6872	-0.122	0.0206
94	SLV 14	0.26429	-0.78026	0.0625	0.6872	-0.122	0.0206
94	SLV 15	0.26429	0.78034	0.0625	-0.6881	-0.122	-0.0204
94	SLV 16	0.26429	0.78034	0.0625	-0.6881	-0.122	-0.0204
95	SLU 1	-0.00542	0.00003	-0.11973	-0.0003	0.1121	-0.0001
95	SLU 2	-0.00542	0.00003	-0.11974	-0.0003	0.1121	-0.0001
95	SLU 3	-0.00542	0.00004	-0.11974	-0.0003	0.1121	-0.0001
95	SLU 4	-0.00542	0.00006	-0.11973	-0.0003	0.1121	-0.0001
95	SLU 5	-0.00542	0.00006	-0.11974	-0.0003	0.1121	-0.0001
95	SLU 6	-0.00612	0.00003	-0.12941	-0.0003	0.1211	-0.0001
95	SLU 7	-0.00612	0.00004	-0.12941	-0.0003	0.1211	-0.0001
95	SLU 8	-0.00612	0.00006	-0.1294	-0.0003	0.1211	-0.0001
95	SLU 9	-0.00612	0.00006	-0.12941	-0.0003	0.1211	-0.0001
95	SLU 10	-0.00681	0.00003	-0.13907	-0.0003	0.1301	-0.0001

Nodo	Cont.	Spostamento			Rotazione		
Ind.	N.br.	ux	uy	uz	rx	ry	rz
95	SLU 11	-0.00681	0.00003	-0.13908	-0.0003	0.1301	-0.0001
95	SLU 12	-0.00681	0.00004	-0.13907	-0.0003	0.1301	-0.0001
95	SLU 13	-0.00681	0.00004	-0.13908	-0.0003	0.1301	-0.0001
95	SLU 14	-0.01139	-0.00011	-0.16879	-0.0003	0.1638	-0.0001
95	SLU 15	-0.01139	-0.00009	-0.16879	-0.0003	0.1638	-0.0001
95	SLU 16	-0.01139	-0.00008	-0.16878	-0.0003	0.1638	-0.0001
95	SLU 17	-0.01139	-0.00008	-0.16879	-0.0003	0.1638	-0.0001
95	SLU 18	-0.01209	-0.0001	-0.17846	-0.0003	0.1729	-0.0001
95	SLU 19	-0.01209	-0.00009	-0.17846	-0.0003	0.1729	-0.0001
95	SLU 20	-0.01209	-0.00007	-0.17845	-0.0003	0.1728	-0.0001
95	SLU 21	-0.01209	-0.00007	-0.17846	-0.0003	0.1728	-0.0001
95	SLU 22	-0.01278	-0.0001	-0.18812	-0.0003	0.1819	-0.0001
95	SLU 23	-0.01278	-0.0001	-0.18813	-0.0003	0.1819	-0.0001
95	SLU 24	-0.01278	-0.00009	-0.18812	-0.0003	0.1819	-0.0001
95	SLU 25	-0.01278	-0.00009	-0.18813	-0.0003	0.1819	-0.0001
95	SLU 26	-0.02034	-0.0003	-0.24235	-0.0003	0.2415	-0.0001
95	SLU 27	-0.02034	-0.0003	-0.24236	-0.0003	0.2415	-0.0001
95	SLU 28	-0.02034	-0.00029	-0.24235	-0.0003	0.2415	-0.0001
95	SLU 29	-0.02034	-0.00029	-0.24236	-0.0003	0.2415	-0.0001
95	SLU 30	-0.02104	-0.0003	-0.25203	-0.0003	0.2505	-0.0001
95	SLU 31	-0.02104	-0.0003	-0.25203	-0.0003	0.2505	-0.0001
95	SLU 32	-0.02104	-0.00029	-0.25203	-0.0003	0.2505	-0.0001
95	SLU 33	-0.02104	-0.00029	-0.25203	-0.0003	0.2505	-0.0001
95	SLU 34	-0.00542	0.00003	-0.11973	-0.0003	0.1121	-0.0001
95	SLU 35	-0.00542	0.00003	-0.11974	-0.0003	0.1121	-0.0001
95	SLU 36	-0.00542	0.00004	-0.11974	-0.0003	0.1121	-0.0001
95	SLU 37	-0.00542	0.00006	-0.11973	-0.0003	0.1121	-0.0001
95	SLU 38	-0.00542	0.00006	-0.11974	-0.0003	0.1121	-0.0001
95	SLU 39	-0.00612	0.00003	-0.12941	-0.0003	0.1211	-0.0001
95	SLU 40	-0.00612	0.00004	-0.12941	-0.0003	0.1211	-0.0001
95	SLU 41	-0.00612	0.00006	-0.1294	-0.0003	0.1211	-0.0001
95	SLU 42	-0.00612	0.00006	-0.12941	-0.0003	0.1211	-0.0001
95	SLU 43	-0.00681	0.00003	-0.13907	-0.0003	0.1301	-0.0001
95	SLU 44	-0.00681	0.00003	-0.13908	-0.0003	0.1301	-0.0001
95	SLU 45	-0.00681	0.00004	-0.13907	-0.0003	0.1301	-0.0001
95	SLU 46	-0.00681	0.00004	-0.13908	-0.0003	0.1301	-0.0001
95	SLU 47	-0.01139	-0.00011	-0.16879	-0.0003	0.1638	-0.0001
95	SLU 48	-0.01139	-0.00009	-0.16879	-0.0003	0.1638	-0.0001
95	SLU 49	-0.01139	-0.00008	-0.16878	-0.0003	0.1638	-0.0001
95	SLU 50	-0.01139	-0.00008	-0.16879	-0.0003	0.1638	-0.0001
95	SLU 51	-0.01209	-0.0001	-0.17846	-0.0003	0.1729	-0.0001
95	SLU 52	-0.01209	-0.00009	-0.17846	-0.0003	0.1729	-0.0001
95	SLU 53	-0.01209	-0.00007	-0.17845	-0.0003	0.1728	-0.0001
95	SLU 54	-0.01209	-0.00007	-0.17846	-0.0003	0.1728	-0.0001
95	SLU 55	-0.01278	-0.0001	-0.18812	-0.0003	0.1819	-0.0001
95	SLU 56	-0.01278	-0.0001	-0.18813	-0.0003	0.1819	-0.0001
95	SLU 57	-0.01278	-0.00009	-0.18812	-0.0003	0.1819	-0.0001
95	SLU 58	-0.01278	-0.00009	-0.18813	-0.0003	0.1819	-0.0001
95	SLU 59	-0.02034	-0.0003	-0.24235	-0.0003	0.2415	-0.0001
95	SLU 60	-0.02034	-0.0003	-0.24236	-0.0003	0.2415	-0.0001
95	SLU 61	-0.02034	-0.00029	-0.24235	-0.0003	0.2415	-0.0001
95	SLU 62	-0.02034	-0.00029	-0.24236	-0.0003	0.2415	-0.0001
95	SLU 63	-0.02104	-0.0003	-0.25203	-0.0003	0.2505	-0.0001
95	SLU 64	-0.02104	-0.0003	-0.25203	-0.0003	0.2505	-0.0001
95	SLU 65	-0.02104	-0.00029	-0.25203	-0.0003	0.2505	-0.0001
95	SLU 66	-0.02104	-0.00029	-0.25203	-0.0003	0.2505	-0.0001
95	SLU 67	-0.00705	0.00004	-0.15565	-0.0004	0.1457	-0.0001
95	SLU 68	-0.00705	0.00004	-0.15566	-0.0004	0.1457	-0.0001
95	SLU 69	-0.00705	0.00005	-0.15566	-0.0004	0.1457	-0.0001
95	SLU 70	-0.00705	0.00007	-0.15565	-0.0004	0.1457	-0.0001
95	SLU 71	-0.00705	0.00007	-0.15565	-0.0004	0.1457	-0.0001
95	SLU 72	-0.00774	0.00004	-0.16533	-0.0004	0.1547	-0.0001
95	SLU 73	-0.00774	0.00005	-0.16533	-0.0004	0.1547	-0.0001
95	SLU 74	-0.00774	0.00007	-0.16532	-0.0004	0.1547	-0.0001
95	SLU 75	-0.00774	0.00007	-0.16533	-0.0004	0.1547	-0.0001
95	SLU 76	-0.00844	0.00004	-0.17499	-0.0004	0.1637	-0.0001
95	SLU 77	-0.00844	0.00004	-0.175	-0.0004	0.1637	-0.0001
95	SLU 78	-0.00844	0.00005	-0.17499	-0.0004	0.1637	-0.0001
95	SLU 79	-0.00844	0.00005	-0.175	-0.0004	0.1637	-0.0001
95	SLU 80	-0.01301	-0.0001	-0.20471	-0.0004	0.1974	-0.0001
95	SLU 81	-0.01301	-0.00009	-0.20471	-0.0004	0.1974	-0.0001
95	SLU 82	-0.01301	-0.00007	-0.2047	-0.0004	0.1974	-0.0001
95	SLU 83	-0.01301	-0.00007	-0.2047	-0.0004	0.1974	-0.0001
95	SLU 84	-0.01371	-0.0001	-0.21438	-0.0004	0.2065	-0.0001
95	SLU 85	-0.01371	-0.00008	-0.21438	-0.0004	0.2065	-0.0001
95	SLU 86	-0.01371	-0.00007	-0.21437	-0.0004	0.2065	-0.0001
95	SLU 87	-0.01371	-0.00007	-0.21438	-0.0004	0.2065	-0.0001
95	SLU 88	-0.01441	-0.00009	-0.22404	-0.0004	0.2155	-0.0001
95	SLU 89	-0.01441	-0.00009	-0.22405	-0.0004	0.2155	-0.0001
95	SLU 90	-0.01441	-0.00008	-0.22404	-0.0004	0.2155	-0.0001
95	SLU 91	-0.01441	-0.00008	-0.22405	-0.0004	0.2155	-0.0001
95	SLU 92	-0.02197	-0.0003	-0.27827	-0.0003	0.2751	-0.0001
95	SLU 93	-0.02197	-0.0003	-0.27828	-0.0003	0.2751	-0.0001
95	SLU 94	-0.02197	-0.00028	-0.27827	-0.0004	0.2751	-0.0001
95	SLU 95	-0.02197	-0.00028	-0.27828	-0.0003	0.2751	-0.0001
95	SLU 96	-0.02266	-0.00029	-0.28795	-0.0004	0.2841	-0.0001
95	SLU 97	-0.02266	-0.0003	-0.28795	-0.0003	0.2841	-0.0001
95	SLU 98	-0.02266	-0.00028	-0.28795	-0.0004	0.2841	-0.0001
95	SLU 99	-0.02266	-0.00028	-0.28795	-0.0004	0.2841	-0.0001
95	SLU 100	-0.00705	0.00004	-0.15565	-0.0004	0.1457	-0.0001
95	SLU 101	-0.00705	0.00004	-0.15566	-0.0004	0.1457	-0.0001
95	SLU 102	-0.00705	0.00005	-0.15566	-0.0004	0.1457	-0.0001
95	SLU 103	-0.00705	0.00007	-0.15565	-0.0004	0.1457	-0.0001
95	SLU 104	-0.00705	0.00007	-0.15565	-0.0004	0.1457	-0.0001
95	SLU 105	-0.00774	0.00004	-0.16533	-0.0004	0.1547	-0.0001

Nodo	Cont.	Spostamento			Rotazione		
Ind.	N.br.	ux	uy	uz	rx	ry	rz
95	SLU 106	-0.00774	0.00005	-0.16533	-0.0004	0.1547	-0.0001
95	SLU 107	-0.00774	0.00007	-0.16532	-0.0004	0.1547	-0.0001
95	SLU 108	-0.00774	0.00007	-0.16533	-0.0004	0.1547	-0.0001
95	SLU 109	-0.00844	0.00004	-0.17499	-0.0004	0.1637	-0.0001
95	SLU 110	-0.00844	0.00004	-0.175	-0.0004	0.1637	-0.0001
95	SLU 111	-0.00844	0.00005	-0.17499	-0.0004	0.1637	-0.0001
95	SLU 112	-0.00844	0.00005	-0.175	-0.0004	0.1637	-0.0001
95	SLU 113	-0.01301	-0.0001	-0.20471	-0.0004	0.1974	-0.0001
95	SLU 114	-0.01301	-0.00009	-0.20471	-0.0004	0.1974	-0.0001
95	SLU 115	-0.01301	-0.00007	-0.2047	-0.0004	0.1974	-0.0001
95	SLU 116	-0.01301	-0.00007	-0.2047	-0.0004	0.1974	-0.0001
95	SLU 117	-0.01371	-0.0001	-0.21438	-0.0004	0.2065	-0.0001
95	SLU 118	-0.01371	-0.00008	-0.21438	-0.0004	0.2065	-0.0001
95	SLU 119	-0.01371	-0.00007	-0.21437	-0.0004	0.2065	-0.0001
95	SLU 120	-0.01371	-0.00007	-0.21438	-0.0004	0.2065	-0.0001
95	SLU 121	-0.01441	-0.00009	-0.22404	-0.0004	0.2155	-0.0001
95	SLU 122	-0.01441	-0.00009	-0.22405	-0.0004	0.2155	-0.0001
95	SLU 123	-0.01441	-0.00008	-0.22404	-0.0004	0.2155	-0.0001
95	SLU 124	-0.01441	-0.00008	-0.22405	-0.0004	0.2155	-0.0001
95	SLU 125	-0.02197	-0.0003	-0.27827	-0.0003	0.2751	-0.0001
95	SLU 126	-0.02197	-0.0003	-0.27828	-0.0003	0.2751	-0.0001
95	SLU 127	-0.02197	-0.00028	-0.27827	-0.0004	0.2751	-0.0001
95	SLU 128	-0.02197	-0.00028	-0.27828	-0.0003	0.2751	-0.0001
95	SLU 129	-0.02266	-0.00029	-0.28795	-0.0004	0.2841	-0.0001
95	SLU 130	-0.02266	-0.0003	-0.28795	-0.0003	0.2841	-0.0001
95	SLU 131	-0.02266	-0.00028	-0.28795	-0.0004	0.2841	-0.0001
95	SLU 132	-0.02266	-0.00028	-0.28795	-0.0004	0.2841	-0.0001
95	SLE RA 1	-0.00542	0.00003	-0.11973	-0.0003	0.1121	-0.0001
95	SLE RA 2	-0.00542	0.00003	-0.11973	-0.0003	0.1121	-0.0001
95	SLE RA 3	-0.00542	0.00004	-0.11973	-0.0003	0.1121	-0.0001
95	SLE RA 4	-0.00542	0.00005	-0.11973	-0.0003	0.1121	-0.0001
95	SLE RA 5	-0.00542	0.00005	-0.11973	-0.0003	0.1121	-0.0001
95	SLE RA 6	-0.00589	0.00003	-0.12618	-0.0003	0.1181	-0.0001
95	SLE RA 7	-0.00589	0.00004	-0.12618	-0.0003	0.1181	-0.0001
95	SLE RA 8	-0.00589	0.00005	-0.12618	-0.0003	0.1181	-0.0001
95	SLE RA 9	-0.00589	0.00005	-0.12618	-0.0003	0.1181	-0.0001
95	SLE RA 10	-0.00635	0.00003	-0.13263	-0.0003	0.1241	-0.0001
95	SLE RA 11	-0.00635	0.00003	-0.13263	-0.0003	0.1241	-0.0001
95	SLE RA 12	-0.00635	0.00004	-0.13263	-0.0003	0.1241	-0.0001
95	SLE RA 13	-0.00635	0.00004	-0.13263	-0.0003	0.1241	-0.0001
95	SLE RA 14	-0.0094	-0.00006	-0.15243	-0.0003	0.1466	-0.0001
95	SLE RA 15	-0.0094	-0.00005	-0.15243	-0.0003	0.1466	-0.0001
95	SLE RA 16	-0.0094	-0.00004	-0.15243	-0.0003	0.1466	-0.0001
95	SLE RA 17	-0.0094	-0.00004	-0.15243	-0.0003	0.1466	-0.0001
95	SLE RA 18	-0.00986	-0.00006	-0.15888	-0.0003	0.1526	-0.0001
95	SLE RA 19	-0.00986	-0.00005	-0.15888	-0.0003	0.1526	-0.0001
95	SLE RA 20	-0.00986	-0.00004	-0.15888	-0.0003	0.1526	-0.0001
95	SLE RA 21	-0.00986	-0.00004	-0.15888	-0.0003	0.1526	-0.0001
95	SLE RA 22	-0.01033	-0.00006	-0.16533	-0.0003	0.1586	-0.0001
95	SLE RA 23	-0.01033	-0.00006	-0.16533	-0.0003	0.1586	-0.0001
95	SLE RA 24	-0.01033	-0.00005	-0.16533	-0.0003	0.1586	-0.0001
95	SLE RA 25	-0.01033	-0.00005	-0.16533	-0.0003	0.1586	-0.0001
95	SLE RA 26	-0.01537	-0.00019	-0.20148	-0.0003	0.1983	-0.0001
95	SLE RA 27	-0.01537	-0.00019	-0.20148	-0.0003	0.1983	-0.0001
95	SLE RA 28	-0.01537	-0.00019	-0.20148	-0.0003	0.1983	-0.0001
95	SLE RA 29	-0.01537	-0.00019	-0.20148	-0.0003	0.1983	-0.0001
95	SLE RA 30	-0.01583	-0.00019	-0.20793	-0.0003	0.2043	-0.0001
95	SLE RA 31	-0.01583	-0.00019	-0.20793	-0.0003	0.2044	-0.0001
95	SLE RA 32	-0.01583	-0.00019	-0.20793	-0.0003	0.2043	-0.0001
95	SLE RA 33	-0.01583	-0.00019	-0.20793	-0.0003	0.2044	-0.0001
95	SLE FR 1	-0.00542	0.00003	-0.11973	-0.0003	0.1121	-0.0001
95	SLE FR 2	-0.00542	0.00003	-0.11973	-0.0003	0.1121	-0.0001
95	SLE FR 3	-0.00542	0.00004	-0.11973	-0.0003	0.1121	-0.0001
95	SLE FR 4	-0.00561	0.00003	-0.12231	-0.0003	0.1145	-0.0001
95	SLE FR 5	-0.0094	-0.00006	-0.15243	-0.0003	0.1466	-0.0001
95	SLE QP 1	-0.00542	0.00003	-0.11973	-0.0003	0.1121	-0.0001
95	SLO 1	-0.1465	-0.32019	-0.02041	0.2822	0.1175	-0.0084
95	SLO 2	-0.1465	-0.32019	-0.02041	0.2822	0.1175	-0.0084
95	SLO 3	-0.1465	0.32025	-0.02041	-0.2828	0.1175	0.0083
95	SLO 4	-0.1465	0.32025	-0.02041	-0.2828	0.1175	0.0083
95	SLO 5	-0.04774	-1.06736	-0.08993	0.9413	0.1137	-0.0278
95	SLO 6	-0.04774	-1.06736	-0.08993	0.9413	0.1137	-0.0278
95	SLO 7	-0.04774	1.06742	-0.08993	-0.9419	0.1137	0.0277
95	SLO 8	-0.04774	1.06742	-0.08993	-0.9419	0.1137	0.0277
95	SLO 9	0.0369	-1.06736	-0.14952	0.9413	0.1104	-0.0278
95	SLO 10	0.0369	-1.06736	-0.14952	0.9413	0.1104	-0.0278
95	SLO 11	0.0369	1.06742	-0.14952	-0.9419	0.1104	0.0277
95	SLO 12	0.0369	1.06742	-0.14952	-0.9419	0.1104	0.0277
95	SLO 13	0.13566	-0.32019	-0.21904	0.2822	0.1066	-0.0084
95	SLO 14	0.13566	-0.32019	-0.21904	0.2822	0.1066	-0.0084
95	SLO 15	0.13566	0.32025	-0.21904	-0.2828	0.1066	0.0083
95	SLO 16	0.13566	0.32025	-0.21904	-0.2828	0.1066	0.0083
95	SLD 1	-0.12118	-0.29585	-0.03824	0.2607	0.1165	-0.0077
95	SLD 2	-0.12118	-0.29585	-0.03824	0.2607	0.1165	-0.0077
95	SLD 3	-0.12118	0.2959	-0.03824	-0.2613	0.1165	0.0076
95	SLD 4	-0.12118	0.2959	-0.03824	-0.2613	0.1165	0.0076
95	SLD 5	-0.04015	-0.98623	-0.09528	0.8697	0.1134	-0.0257
95	SLD 6	-0.04015	-0.98623	-0.09528	0.8697	0.1134	-0.0257
95	SLD 7	-0.04015	0.98628	-0.09528	-0.8703	0.1134	0.0256
95	SLD 8	-0.04015	0.98628	-0.09528	-0.8703	0.1134	0.0256
95	SLD 9	0.02931	-0.98623	-0.14418	0.8697	0.1107	-0.0257
95	SLD 10	0.02931	-0.98623	-0.14418	0.8697	0.1107	-0.0257
95	SLD 11	0.02931	0.98628	-0.14418	-0.8703	0.1107	0.0256
95	SLD 12	0.02931	0.98628	-0.14418	-0.8703	0.1107	0.0256
95	SLD 13	0.11034	-0.29585	-0.20122	0.2607	0.1076	-0.0077

Nodo	Cont.	Spostamento			Rotazione		
Ind.	N.br.	ux	uy	uz	rx	ry	rz
95	SLD 14	0.11034	-0.29585	-0.20122	0.2607	0.1076	-0.0077
95	SLD 15	0.11034	0.2959	-0.20122	-0.2613	0.1076	0.0076
95	SLD 16	0.11034	0.2959	-0.20122	-0.2613	0.1076	0.0076
95	SLV 1	-0.26403	-0.78035	0.06232	0.6881	0.122	-0.0203
95	SLV 2	-0.26403	-0.78035	0.06232	0.6881	0.122	-0.0203
95	SLV 3	-0.26403	0.78041	0.06232	-0.6887	0.122	0.0202
95	SLV 4	-0.26403	0.78041	0.06232	-0.6887	0.122	0.0202
95	SLV 5	-0.083	-2.60123	-0.06511	2.2944	0.115	-0.0676
95	SLV 6	-0.083	-2.60123	-0.06511	2.2944	0.115	-0.0676
95	SLV 7	-0.083	2.60129	-0.06511	-2.2949	0.115	0.0675
95	SLV 8	-0.083	2.60129	-0.06511	-2.2949	0.115	0.0675
95	SLV 9	0.07216	-2.60123	-0.17434	2.2944	0.1091	-0.0676
95	SLV 10	0.07216	-2.60123	-0.17434	2.2944	0.1091	-0.0676
95	SLV 11	0.07216	2.60129	-0.17434	-2.2949	0.1091	0.0675
95	SLV 12	0.07216	2.60129	-0.17434	-2.2949	0.1091	0.0675
95	SLV 13	0.25319	-0.78035	-0.30178	0.6881	0.1021	-0.0203
95	SLV 14	0.25319	-0.78035	-0.30178	0.6881	0.1021	-0.0203
95	SLV 15	0.25319	0.78041	-0.30178	-0.6887	0.1021	0.0202
95	SLV 16	0.25319	0.78041	-0.30178	-0.6887	0.1021	0.0202
96	SLU 1	0.00542	0.00003	-0.11973	-0.0003	-0.1121	0.0001
96	SLU 2	0.00542	0.00003	-0.11974	-0.0003	-0.1121	0.0001
96	SLU 3	0.00542	0.00004	-0.11974	-0.0003	-0.1121	0.0001
96	SLU 4	0.00542	0.00006	-0.11973	-0.0003	-0.1121	0.0001
96	SLU 5	0.00542	0.00006	-0.11974	-0.0003	-0.1121	0.0001
96	SLU 6	0.00633	0.00003	-0.12924	-0.0003	-0.1211	0.0001
96	SLU 7	0.00633	0.00004	-0.12924	-0.0003	-0.1211	0.0001
96	SLU 8	0.00633	0.00006	-0.12923	-0.0003	-0.1211	0.0001
96	SLU 9	0.00633	0.00006	-0.12923	-0.0003	-0.1211	0.0001
96	SLU 10	0.00723	0.00003	-0.13873	-0.0003	-0.1301	0.0001
96	SLU 11	0.00723	0.00003	-0.13873	-0.0003	-0.1301	0.0001
96	SLU 12	0.00723	0.00004	-0.13873	-0.0003	-0.1301	0.0001
96	SLU 13	0.00723	0.00004	-0.13873	-0.0003	-0.1301	0.0001
96	SLU 14	0.01174	-0.00011	-0.1685	-0.0003	-0.1638	0.0001
96	SLU 15	0.01174	-0.00009	-0.1685	-0.0003	-0.1638	0.0001
96	SLU 16	0.01174	-0.00008	-0.16849	-0.0003	-0.1638	0.0001
96	SLU 17	0.01174	-0.00008	-0.1685	-0.0003	-0.1638	0.0001
96	SLU 18	0.01265	-0.0001	-0.178	-0.0003	-0.1728	0.0001
96	SLU 19	0.01265	-0.00009	-0.178	-0.0003	-0.1728	0.0001
96	SLU 20	0.01265	-0.00007	-0.17799	-0.0003	-0.1728	0.0001
96	SLU 21	0.01265	-0.00007	-0.17799	-0.0003	-0.1728	0.0001
96	SLU 22	0.01355	-0.0001	-0.18749	-0.0003	-0.1818	0.0001
96	SLU 23	0.01355	-0.0001	-0.18749	-0.0003	-0.1819	0.0001
96	SLU 24	0.01355	-0.00009	-0.18749	-0.0003	-0.1818	0.0001
96	SLU 25	0.01355	-0.00009	-0.18749	-0.0003	-0.1819	0.0001
96	SLU 26	0.02122	-0.0003	-0.24163	-0.0003	-0.2415	0.0001
96	SLU 27	0.02122	-0.0003	-0.24164	-0.0003	-0.2415	0.0001
96	SLU 28	0.02122	-0.00029	-0.24163	-0.0003	-0.2415	0.0001
96	SLU 29	0.02122	-0.00029	-0.24164	-0.0003	-0.2415	0.0001
96	SLU 30	0.02212	-0.0003	-0.25113	-0.0003	-0.2505	0.0001
96	SLU 31	0.02212	-0.0003	-0.25114	-0.0003	-0.2505	0.0001
96	SLU 32	0.02212	-0.00029	-0.25113	-0.0003	-0.2505	0.0001
96	SLU 33	0.02212	-0.00029	-0.25114	-0.0003	-0.2505	0.0001
96	SLU 34	0.00542	0.00003	-0.11973	-0.0003	-0.1121	0.0001
96	SLU 35	0.00542	0.00003	-0.11974	-0.0003	-0.1121	0.0001
96	SLU 36	0.00542	0.00004	-0.11974	-0.0003	-0.1121	0.0001
96	SLU 37	0.00542	0.00006	-0.11973	-0.0003	-0.1121	0.0001
96	SLU 38	0.00542	0.00006	-0.11974	-0.0003	-0.1121	0.0001
96	SLU 39	0.00633	0.00003	-0.12924	-0.0003	-0.1211	0.0001
96	SLU 40	0.00633	0.00004	-0.12924	-0.0003	-0.1211	0.0001
96	SLU 41	0.00633	0.00006	-0.12923	-0.0003	-0.1211	0.0001
96	SLU 42	0.00633	0.00006	-0.12923	-0.0003	-0.1211	0.0001
96	SLU 43	0.00723	0.00003	-0.13873	-0.0003	-0.1301	0.0001
96	SLU 44	0.00723	0.00003	-0.13873	-0.0003	-0.1301	0.0001
96	SLU 45	0.00723	0.00004	-0.13873	-0.0003	-0.1301	0.0001
96	SLU 46	0.00723	0.00004	-0.13873	-0.0003	-0.1301	0.0001
96	SLU 47	0.01174	-0.00011	-0.1685	-0.0003	-0.1638	0.0001
96	SLU 48	0.01174	-0.00009	-0.1685	-0.0003	-0.1638	0.0001
96	SLU 49	0.01174	-0.00008	-0.16849	-0.0003	-0.1638	0.0001
96	SLU 50	0.01174	-0.00008	-0.1685	-0.0003	-0.1638	0.0001
96	SLU 51	0.01265	-0.0001	-0.178	-0.0003	-0.1728	0.0001
96	SLU 52	0.01265	-0.00009	-0.178	-0.0003	-0.1728	0.0001
96	SLU 53	0.01265	-0.00007	-0.17799	-0.0003	-0.1728	0.0001
96	SLU 54	0.01265	-0.00007	-0.17799	-0.0003	-0.1728	0.0001
96	SLU 55	0.01355	-0.0001	-0.18749	-0.0003	-0.1818	0.0001
96	SLU 56	0.01355	-0.0001	-0.18749	-0.0003	-0.1819	0.0001
96	SLU 57	0.01355	-0.00009	-0.18749	-0.0003	-0.1818	0.0001
96	SLU 58	0.01355	-0.00009	-0.18749	-0.0003	-0.1819	0.0001
96	SLU 59	0.02122	-0.0003	-0.24163	-0.0003	-0.2415	0.0001
96	SLU 60	0.02122	-0.0003	-0.24164	-0.0003	-0.2415	0.0001
96	SLU 61	0.02122	-0.00029	-0.24163	-0.0003	-0.2415	0.0001
96	SLU 62	0.02122	-0.00029	-0.24164	-0.0003	-0.2415	0.0001
96	SLU 63	0.02212	-0.0003	-0.25113	-0.0003	-0.2505	0.0001
96	SLU 64	0.02212	-0.0003	-0.25114	-0.0003	-0.2505	0.0001
96	SLU 65	0.02212	-0.00029	-0.25113	-0.0003	-0.2505	0.0001
96	SLU 66	0.02212	-0.00029	-0.25114	-0.0003	-0.2505	0.0001
96	SLU 67	0.00705	0.00004	-0.15565	-0.0004	-0.1457	0.0001
96	SLU 68	0.00705	0.00004	-0.15566	-0.0004	-0.1457	0.0001
96	SLU 69	0.00705	0.00005	-0.15566	-0.0004	-0.1457	0.0001
96	SLU 70	0.00705	0.00007	-0.15565	-0.0004	-0.1457	0.0001
96	SLU 71	0.00705	0.00007	-0.15565	-0.0004	-0.1457	0.0001
96	SLU 72	0.00795	0.00004	-0.16515	-0.0004	-0.1547	0.0001
96	SLU 73	0.00795	0.00005	-0.16515	-0.0004	-0.1547	0.0001
96	SLU 74	0.00795	0.00007	-0.16515	-0.0004	-0.1547	0.0001
96	SLU 75	0.00795	0.00007	-0.16515	-0.0004	-0.1547	0.0001
96	SLU 76	0.00886	0.00004	-0.17464	-0.0004	-0.1637	0.0001

Nodo	Cont.	Spostamento			Rotazione		
Ind.	N.br.	ux	uy	uz	rx	ry	rz
96	SLU 77	0.00886	0.00004	-0.17465	-0.0004	-0.1637	0.0001
96	SLU 78	0.00886	0.00005	-0.17464	-0.0004	-0.1637	0.0001
96	SLU 79	0.00886	0.00005	-0.17465	-0.0004	-0.1637	0.0001
96	SLU 80	0.01337	-0.0001	-0.20442	-0.0004	-0.1974	0.0001
96	SLU 81	0.01337	-0.00009	-0.20442	-0.0004	-0.1974	0.0001
96	SLU 82	0.01337	-0.00007	-0.20441	-0.0004	-0.1974	0.0001
96	SLU 83	0.01337	-0.00007	-0.20442	-0.0004	-0.1974	0.0001
96	SLU 84	0.01427	-0.0001	-0.21392	-0.0004	-0.2065	0.0001
96	SLU 85	0.01427	-0.00008	-0.21392	-0.0004	-0.2065	0.0001
96	SLU 86	0.01427	-0.00007	-0.21391	-0.0004	-0.2064	0.0001
96	SLU 87	0.01427	-0.00007	-0.21391	-0.0004	-0.2065	0.0001
96	SLU 88	0.01518	-0.0001	-0.22341	-0.0004	-0.2155	0.0001
96	SLU 89	0.01518	-0.0001	-0.22341	-0.0004	-0.2155	0.0001
96	SLU 90	0.01518	-0.00008	-0.22341	-0.0004	-0.2155	0.0001
96	SLU 91	0.01518	-0.00008	-0.22341	-0.0004	-0.2155	0.0001
96	SLU 92	0.02284	-0.0003	-0.27755	-0.0003	-0.2751	0.0001
96	SLU 93	0.02284	-0.0003	-0.27756	-0.0003	-0.2751	0.0001
96	SLU 94	0.02284	-0.00028	-0.27755	-0.0004	-0.2751	0.0001
96	SLU 95	0.02284	-0.00028	-0.27756	-0.0003	-0.2751	0.0001
96	SLU 96	0.02375	-0.0003	-0.28705	-0.0004	-0.2841	0.0001
96	SLU 97	0.02375	-0.0003	-0.28705	-0.0003	-0.2841	0.0001
96	SLU 98	0.02375	-0.00028	-0.28705	-0.0004	-0.2841	0.0001
96	SLU 99	0.02375	-0.00028	-0.28705	-0.0004	-0.2841	0.0001
96	SLU 100	0.00705	0.00004	-0.15565	-0.0004	-0.1457	0.0001
96	SLU 101	0.00705	0.00004	-0.15566	-0.0004	-0.1457	0.0001
96	SLU 102	0.00705	0.00005	-0.15566	-0.0004	-0.1457	0.0001
96	SLU 103	0.00705	0.00007	-0.15565	-0.0004	-0.1457	0.0001
96	SLU 104	0.00705	0.00007	-0.15565	-0.0004	-0.1457	0.0001
96	SLU 105	0.00795	0.00004	-0.16515	-0.0004	-0.1547	0.0001
96	SLU 106	0.00795	0.00005	-0.16515	-0.0004	-0.1547	0.0001
96	SLU 107	0.00795	0.00007	-0.16515	-0.0004	-0.1547	0.0001
96	SLU 108	0.00795	0.00007	-0.16515	-0.0004	-0.1547	0.0001
96	SLU 109	0.00886	0.00004	-0.17464	-0.0004	-0.1637	0.0001
96	SLU 110	0.00886	0.00004	-0.17465	-0.0004	-0.1637	0.0001
96	SLU 111	0.00886	0.00005	-0.17464	-0.0004	-0.1637	0.0001
96	SLU 112	0.00886	0.00005	-0.17465	-0.0004	-0.1637	0.0001
96	SLU 113	0.01337	-0.0001	-0.20442	-0.0004	-0.1974	0.0001
96	SLU 114	0.01337	-0.00009	-0.20442	-0.0004	-0.1974	0.0001
96	SLU 115	0.01337	-0.00007	-0.20441	-0.0004	-0.1974	0.0001
96	SLU 116	0.01337	-0.00007	-0.20442	-0.0004	-0.1974	0.0001
96	SLU 117	0.01427	-0.0001	-0.21392	-0.0004	-0.2065	0.0001
96	SLU 118	0.01427	-0.00008	-0.21392	-0.0004	-0.2065	0.0001
96	SLU 119	0.01427	-0.00007	-0.21391	-0.0004	-0.2064	0.0001
96	SLU 120	0.01427	-0.00007	-0.21391	-0.0004	-0.2065	0.0001
96	SLU 121	0.01518	-0.0001	-0.22341	-0.0004	-0.2155	0.0001
96	SLU 122	0.01518	-0.0001	-0.22341	-0.0004	-0.2155	0.0001
96	SLU 123	0.01518	-0.00008	-0.22341	-0.0004	-0.2155	0.0001
96	SLU 124	0.01518	-0.00008	-0.22341	-0.0004	-0.2155	0.0001
96	SLU 125	0.02284	-0.0003	-0.27755	-0.0003	-0.2751	0.0001
96	SLU 126	0.02284	-0.0003	-0.27756	-0.0003	-0.2751	0.0001
96	SLU 127	0.02284	-0.00028	-0.27755	-0.0004	-0.2751	0.0001
96	SLU 128	0.02284	-0.00028	-0.27756	-0.0003	-0.2751	0.0001
96	SLU 129	0.02375	-0.0003	-0.28705	-0.0004	-0.2841	0.0001
96	SLU 130	0.02375	-0.0003	-0.28705	-0.0003	-0.2841	0.0001
96	SLU 131	0.02375	-0.00028	-0.28705	-0.0004	-0.2841	0.0001
96	SLU 132	0.02375	-0.00028	-0.28705	-0.0004	-0.2841	0.0001
96	SLE RA 1	0.00542	0.00003	-0.11973	-0.0003	-0.1121	0.0001
96	SLE RA 2	0.00542	0.00003	-0.11973	-0.0003	-0.1121	0.0001
96	SLE RA 3	0.00542	0.00004	-0.11973	-0.0003	-0.1121	0.0001
96	SLE RA 4	0.00542	0.00005	-0.11973	-0.0003	-0.1121	0.0001
96	SLE RA 5	0.00542	0.00005	-0.11973	-0.0003	-0.1121	0.0001
96	SLE RA 6	0.00603	0.00003	-0.12607	-0.0003	-0.1181	0.0001
96	SLE RA 7	0.00603	0.00004	-0.12607	-0.0003	-0.1181	0.0001
96	SLE RA 8	0.00603	0.00005	-0.12606	-0.0003	-0.1181	0.0001
96	SLE RA 9	0.00603	0.00005	-0.12607	-0.0003	-0.1181	0.0001
96	SLE RA 10	0.00663	0.00003	-0.13239	-0.0003	-0.1241	0.0001
96	SLE RA 11	0.00663	0.00003	-0.1324	-0.0003	-0.1241	0.0001
96	SLE RA 12	0.00663	0.00004	-0.13239	-0.0003	-0.1241	0.0001
96	SLE RA 13	0.00663	0.00004	-0.1324	-0.0003	-0.1241	0.0001
96	SLE RA 14	0.00963	-0.00006	-0.15224	-0.0003	-0.1466	0.0001
96	SLE RA 15	0.00963	-0.00005	-0.15224	-0.0003	-0.1466	0.0001
96	SLE RA 16	0.00963	-0.00004	-0.15224	-0.0003	-0.1466	0.0001
96	SLE RA 17	0.00963	-0.00004	-0.15224	-0.0003	-0.1466	0.0001
96	SLE RA 18	0.01024	-0.00006	-0.15857	-0.0003	-0.1526	0.0001
96	SLE RA 19	0.01024	-0.00005	-0.15857	-0.0003	-0.1526	0.0001
96	SLE RA 20	0.01024	-0.00004	-0.15857	-0.0003	-0.1526	0.0001
96	SLE RA 21	0.01024	-0.00004	-0.15857	-0.0003	-0.1526	0.0001
96	SLE RA 22	0.01084	-0.00006	-0.1649	-0.0003	-0.1586	0.0001
96	SLE RA 23	0.01084	-0.00006	-0.16491	-0.0003	-0.1586	0.0001
96	SLE RA 24	0.01084	-0.00005	-0.1649	-0.0003	-0.1586	0.0001
96	SLE RA 25	0.01084	-0.00005	-0.16491	-0.0003	-0.1586	0.0001
96	SLE RA 26	0.01595	-0.00019	-0.201	-0.0003	-0.1983	0.0001
96	SLE RA 27	0.01595	-0.00019	-0.201	-0.0003	-0.1983	0.0001
96	SLE RA 28	0.01595	-0.00019	-0.201	-0.0003	-0.1983	0.0001
96	SLE RA 29	0.01595	-0.00019	-0.201	-0.0003	-0.1983	0.0001
96	SLE RA 30	0.01656	-0.00019	-0.20733	-0.0003	-0.2043	0.0001
96	SLE RA 31	0.01656	-0.00019	-0.20733	-0.0003	-0.2043	0.0001
96	SLE RA 32	0.01656	-0.00019	-0.20733	-0.0003	-0.2043	0.0001
96	SLE RA 33	0.01656	-0.00019	-0.20733	-0.0003	-0.2043	0.0001
96	SLE FR 1	0.00542	0.00003	-0.11973	-0.0003	-0.1121	0.0001
96	SLE FR 2	0.00542	0.00003	-0.11973	-0.0003	-0.1121	0.0001
96	SLE FR 3	0.00542	0.00004	-0.11973	-0.0003	-0.1121	0.0001
96	SLE FR 4	0.00566	0.00003	-0.12226	-0.0003	-0.1145	0.0001
96	SLE FR 5	0.00963	-0.00006	-0.15224	-0.0003	-0.1466	0.0001
96	SLE QP 1	0.00542	0.00003	-0.11973	-0.0003	-0.1121	0.0001

Nodo	Cont.	Spostamento			Rotazione		
Ind.	N.br.	ux	uy	uz	rx	ry	rz
96	SLO 1	-0.13566	-0.32019	-0.21904	0.2822	-0.1066	0.0084
96	SLO 2	-0.13566	-0.32019	-0.21904	0.2822	-0.1066	0.0084
96	SLO 3	-0.13566	0.32025	-0.21904	-0.2828	-0.1066	-0.0083
96	SLO 4	-0.13566	0.32025	-0.21904	-0.2828	-0.1066	-0.0083
96	SLO 5	-0.0369	-1.06736	-0.14952	0.9413	-0.1104	0.0278
96	SLO 6	-0.0369	-1.06736	-0.14952	0.9413	-0.1104	0.0278
96	SLO 7	-0.0369	1.06742	-0.14952	-0.9419	-0.1104	-0.0277
96	SLO 8	-0.0369	1.06742	-0.14952	-0.9419	-0.1104	-0.0277
96	SLO 9	0.04774	-1.06736	-0.08993	0.9413	-0.1137	0.0278
96	SLO 10	0.04774	-1.06736	-0.08993	0.9413	-0.1137	0.0278
96	SLO 11	0.04774	1.06742	-0.08993	-0.9419	-0.1137	-0.0277
96	SLO 12	0.04774	1.06742	-0.08993	-0.9419	-0.1137	-0.0277
96	SLO 13	0.1465	-0.32019	-0.02041	0.2822	-0.1175	0.0084
96	SLO 14	0.1465	-0.32019	-0.02041	0.2822	-0.1175	0.0084
96	SLO 15	0.1465	0.32025	-0.02041	-0.2828	-0.1175	-0.0083
96	SLO 16	0.1465	0.32025	-0.02041	-0.2828	-0.1175	-0.0083
96	SLD 1	-0.11034	-0.29585	-0.20122	0.2607	-0.1076	0.0077
96	SLD 2	-0.11034	-0.29585	-0.20122	0.2607	-0.1076	0.0077
96	SLD 3	-0.11034	0.2959	-0.20122	-0.2613	-0.1076	-0.0076
96	SLD 4	-0.11034	0.2959	-0.20122	-0.2613	-0.1076	-0.0076
96	SLD 5	-0.02931	-0.98623	-0.14418	0.8697	-0.1107	0.0257
96	SLD 6	-0.02931	-0.98623	-0.14418	0.8697	-0.1107	0.0257
96	SLD 7	-0.02931	0.98628	-0.14418	-0.8703	-0.1107	-0.0256
96	SLD 8	-0.02931	0.98628	-0.14418	-0.8703	-0.1107	-0.0256
96	SLD 9	0.04015	-0.98623	-0.09528	0.8697	-0.1134	0.0257
96	SLD 10	0.04015	-0.98623	-0.09528	0.8697	-0.1134	0.0257
96	SLD 11	0.04015	0.98628	-0.09528	-0.8703	-0.1134	-0.0256
96	SLD 12	0.04015	0.98628	-0.09528	-0.8703	-0.1134	-0.0256
96	SLD 13	0.12118	-0.29585	-0.03824	0.2607	-0.1165	0.0077
96	SLD 14	0.12118	-0.29585	-0.03824	0.2607	-0.1165	0.0077
96	SLD 15	0.12118	0.2959	-0.03824	-0.2613	-0.1165	-0.0076
96	SLD 16	0.12118	0.2959	-0.03824	-0.2613	-0.1165	-0.0076
96	SLV 1	-0.25319	-0.78035	-0.30178	0.6881	-0.1021	0.0203
96	SLV 2	-0.25319	-0.78035	-0.30178	0.6881	-0.1021	0.0203
96	SLV 3	-0.25319	0.78041	-0.30178	-0.6887	-0.1021	-0.0202
96	SLV 4	-0.25319	0.78041	-0.30178	-0.6887	-0.1021	-0.0202
96	SLV 5	-0.07216	-2.60123	-0.17434	2.2944	-0.1091	0.0676
96	SLV 6	-0.07216	-2.60123	-0.17434	2.2944	-0.1091	0.0676
96	SLV 7	-0.07216	2.60129	-0.17434	-2.2949	-0.1091	-0.0675
96	SLV 8	-0.07216	2.60129	-0.17434	-2.2949	-0.1091	-0.0675
96	SLV 9	0.083	-2.60123	-0.06511	2.2944	-0.115	0.0676
96	SLV 10	0.083	-2.60123	-0.06511	2.2944	-0.115	0.0676
96	SLV 11	0.083	2.60129	-0.06511	-2.2949	-0.115	-0.0675
96	SLV 12	0.083	2.60129	-0.06511	-2.2949	-0.115	-0.0675
96	SLV 13	0.26403	-0.78035	0.06232	0.6881	-0.122	0.0203
96	SLV 14	0.26403	-0.78035	0.06232	0.6881	-0.122	0.0203
96	SLV 15	0.26403	0.78041	0.06232	-0.6887	-0.122	-0.0202
96	SLV 16	0.26403	0.78041	0.06232	-0.6887	-0.122	-0.0202
97	SLU 1	0.00788	0.00002	-0.04768	-0.0002	0.0159	0
97	SLU 2	0.02123	0.00002	-0.1768	-0.0002	0.0664	0
97	SLU 3	0.02123	0.00003	-0.1768	-0.0002	0.0664	0
97	SLU 4	0.00788	0.00004	-0.04768	-0.0002	0.0159	0
97	SLU 5	0.01789	0.00004	-0.14452	-0.0002	0.0538	0
97	SLU 6	0.02163	0.00002	-0.17949	-0.0002	0.0672	0
97	SLU 7	0.02163	0.00003	-0.17949	-0.0002	0.0672	0
97	SLU 8	0.00828	0.00005	-0.05037	-0.0002	0.0166	0
97	SLU 9	0.01829	0.00005	-0.14721	-0.0002	0.0545	0
97	SLU 10	0.00868	0.00002	-0.05306	-0.0002	0.0173	0
97	SLU 11	0.01869	0.00002	-0.14989	-0.0002	0.0553	0
97	SLU 12	0.00868	0.00003	-0.05306	-0.0002	0.0173	0
97	SLU 13	0.01869	0.00003	-0.14989	-0.0002	0.0553	0
97	SLU 14	0.02174	-0.00012	-0.17973	-0.0001	0.067	0
97	SLU 15	0.02174	-0.00011	-0.17973	-0.0001	0.067	0
97	SLU 16	0.00839	-0.00009	-0.05062	-0.0001	0.0165	0
97	SLU 17	0.0184	-0.00009	-0.14745	-0.0001	0.0544	0
97	SLU 18	0.02214	-0.00012	-0.18242	-0.0001	0.0678	0
97	SLU 19	0.02214	-0.00011	-0.18242	-0.0001	0.0678	0
97	SLU 20	0.00879	-0.00009	-0.0533	-0.0001	0.0172	0
97	SLU 21	0.0188	-0.00009	-0.15014	-0.0001	0.0551	0
97	SLU 22	0.00919	-0.00012	-0.05599	-0.0001	0.0179	0
97	SLU 23	0.0192	-0.00012	-0.15283	-0.0001	0.0559	0
97	SLU 24	0.00919	-0.00011	-0.05599	-0.0001	0.0179	0
97	SLU 25	0.0192	-0.00011	-0.15283	-0.0001	0.0559	0
97	SLU 26	0.00915	-0.00032	-0.05502	-0.0001	0.0174	0
97	SLU 27	0.01916	-0.00032	-0.15185	-0.0001	0.0553	0
97	SLU 28	0.00915	-0.00031	-0.05502	-0.0001	0.0174	0
97	SLU 29	0.01916	-0.00031	-0.15185	-0.0001	0.0553	0
97	SLU 30	0.00955	-0.00032	-0.0577	-0.0001	0.0181	0
97	SLU 31	0.01956	-0.00032	-0.15454	-0.0001	0.056	0
97	SLU 32	0.00955	-0.00031	-0.0577	-0.0001	0.0181	0
97	SLU 33	0.01956	-0.00031	-0.15454	-0.0001	0.056	0
97	SLU 34	0.00788	0.00002	-0.04768	-0.0002	0.0159	0
97	SLU 35	0.02123	0.00002	-0.1768	-0.0002	0.0664	0
97	SLU 36	0.02123	0.00003	-0.1768	-0.0002	0.0664	0
97	SLU 37	0.00788	0.00004	-0.04768	-0.0002	0.0159	0
97	SLU 38	0.01789	0.00004	-0.14452	-0.0002	0.0538	0
97	SLU 39	0.02163	0.00002	-0.17949	-0.0002	0.0672	0
97	SLU 40	0.02163	0.00003	-0.17949	-0.0002	0.0672	0
97	SLU 41	0.00828	0.00005	-0.05037	-0.0002	0.0166	0
97	SLU 42	0.01829	0.00005	-0.14721	-0.0002	0.0545	0
97	SLU 43	0.00868	0.00002	-0.05306	-0.0002	0.0173	0
97	SLU 44	0.01869	0.00002	-0.14989	-0.0002	0.0553	0
97	SLU 45	0.00868	0.00003	-0.05306	-0.0002	0.0173	0
97	SLU 46	0.01869	0.00003	-0.14989	-0.0002	0.0553	0
97	SLU 47	0.02174	-0.00012	-0.17973	-0.0001	0.067	0

Nodo	Cont.	Spostamento			Rotazione		
Ind.	N.br.	ux	uy	uz	rx	ry	rz
97	SLU 48	0.02174	-0.00011	-0.17973	-0.0001	0.067	0
97	SLU 49	0.00839	-0.00009	-0.05062	-0.0001	0.0165	0
97	SLU 50	0.0184	-0.00009	-0.14745	-0.0001	0.0544	0
97	SLU 51	0.02214	-0.00012	-0.18242	-0.0001	0.0678	0
97	SLU 52	0.02214	-0.00011	-0.18242	-0.0001	0.0678	0
97	SLU 53	0.00879	-0.00009	-0.0533	-0.0001	0.0172	0
97	SLU 54	0.0188	-0.00009	-0.15014	-0.0001	0.0551	0
97	SLU 55	0.00919	-0.00012	-0.05599	-0.0001	0.0179	0
97	SLU 56	0.0192	-0.00012	-0.15283	-0.0001	0.0559	0
97	SLU 57	0.00919	-0.00011	-0.05599	-0.0001	0.0179	0
97	SLU 58	0.0192	-0.00011	-0.15283	-0.0001	0.0559	0
97	SLU 59	0.00915	-0.00032	-0.05502	-0.0001	0.0174	0
97	SLU 60	0.01916	-0.00032	-0.15185	-0.0001	0.0553	0
97	SLU 61	0.00915	-0.00031	-0.05502	-0.0001	0.0174	0
97	SLU 62	0.01916	-0.00031	-0.15185	-0.0001	0.0553	0
97	SLU 63	0.00955	-0.00032	-0.0577	-0.0001	0.0181	0
97	SLU 64	0.01956	-0.00032	-0.15454	-0.0001	0.056	0
97	SLU 65	0.00955	-0.00031	-0.0577	-0.0001	0.0181	0
97	SLU 66	0.01956	-0.00031	-0.15454	-0.0001	0.056	0
97	SLU 67	0.01024	0.00002	-0.06199	-0.0002	0.0207	0
97	SLU 68	0.02359	0.00002	-0.19111	-0.0002	0.0712	0
97	SLU 69	0.02359	0.00003	-0.19111	-0.0002	0.0712	0
97	SLU 70	0.01024	0.00005	-0.06199	-0.0002	0.0207	0
97	SLU 71	0.02026	0.00005	-0.15883	-0.0002	0.0586	0
97	SLU 72	0.02399	0.00002	-0.19379	-0.0002	0.0719	0
97	SLU 73	0.02399	0.00003	-0.19379	-0.0002	0.0719	0
97	SLU 74	0.01064	0.00005	-0.06468	-0.0002	0.0214	0
97	SLU 75	0.02066	0.00005	-0.16151	-0.0002	0.0593	0
97	SLU 76	0.01105	0.00002	-0.06736	-0.0002	0.0221	0
97	SLU 77	0.02106	0.00002	-0.1642	-0.0002	0.06	0
97	SLU 78	0.01105	0.00003	-0.06736	-0.0002	0.0221	0
97	SLU 79	0.02106	0.00003	-0.1642	-0.0002	0.06	0
97	SLU 80	0.0241	-0.00012	-0.19404	-0.0002	0.0718	0
97	SLU 81	0.0241	-0.0001	-0.19404	-0.0002	0.0718	0
97	SLU 82	0.01075	-0.00009	-0.06492	-0.0002	0.0213	0
97	SLU 83	0.02076	-0.00009	-0.16176	-0.0002	0.0592	0
97	SLU 84	0.0245	-0.00011	-0.19673	-0.0002	0.0725	0
97	SLU 85	0.0245	-0.0001	-0.19673	-0.0002	0.0725	0
97	SLU 86	0.01115	-0.00009	-0.06761	-0.0002	0.022	0
97	SLU 87	0.02116	-0.00009	-0.16445	-0.0002	0.0599	0
97	SLU 88	0.01155	-0.00011	-0.0703	-0.0002	0.0227	0
97	SLU 89	0.02157	-0.00011	-0.16713	-0.0002	0.0606	0
97	SLU 90	0.01155	-0.0001	-0.0703	-0.0002	0.0227	0
97	SLU 91	0.02157	-0.0001	-0.16713	-0.0002	0.0606	0
97	SLU 92	0.01151	-0.00032	-0.06932	-0.0001	0.0222	0
97	SLU 93	0.02153	-0.00032	-0.16616	-0.0001	0.0601	0
97	SLU 94	0.01151	-0.00031	-0.06932	-0.0001	0.0222	0
97	SLU 95	0.02153	-0.00031	-0.16616	-0.0001	0.0601	0
97	SLU 96	0.01191	-0.00032	-0.07201	-0.0001	0.0229	0
97	SLU 97	0.02193	-0.00032	-0.16885	-0.0001	0.0608	0
97	SLU 98	0.01191	-0.00031	-0.07201	-0.0001	0.0229	0
97	SLU 99	0.02193	-0.00031	-0.16885	-0.0001	0.0608	0
97	SLU 100	0.01024	0.00002	-0.06199	-0.0002	0.0207	0
97	SLU 101	0.02359	0.00002	-0.19111	-0.0002	0.0712	0
97	SLU 102	0.02359	0.00003	-0.19111	-0.0002	0.0712	0
97	SLU 103	0.01024	0.00005	-0.06199	-0.0002	0.0207	0
97	SLU 104	0.02026	0.00005	-0.15883	-0.0002	0.0586	0
97	SLU 105	0.02399	0.00002	-0.19379	-0.0002	0.0719	0
97	SLU 106	0.02399	0.00003	-0.19379	-0.0002	0.0719	0
97	SLU 107	0.01064	0.00005	-0.06468	-0.0002	0.0214	0
97	SLU 108	0.02066	0.00005	-0.16151	-0.0002	0.0593	0
97	SLU 109	0.01105	0.00002	-0.06736	-0.0002	0.0221	0
97	SLU 110	0.02106	0.00002	-0.1642	-0.0002	0.06	0
97	SLU 111	0.01105	0.00003	-0.06736	-0.0002	0.0221	0
97	SLU 112	0.02106	0.00003	-0.1642	-0.0002	0.06	0
97	SLU 113	0.0241	-0.00012	-0.19404	-0.0002	0.0718	0
97	SLU 114	0.0241	-0.0001	-0.19404	-0.0002	0.0718	0
97	SLU 115	0.01075	-0.00009	-0.06492	-0.0002	0.0213	0
97	SLU 116	0.02076	-0.00009	-0.16176	-0.0002	0.0592	0
97	SLU 117	0.0245	-0.00011	-0.19673	-0.0002	0.0725	0
97	SLU 118	0.0245	-0.0001	-0.19673	-0.0002	0.0725	0
97	SLU 119	0.01115	-0.00009	-0.06761	-0.0002	0.022	0
97	SLU 120	0.02116	-0.00009	-0.16445	-0.0002	0.0599	0
97	SLU 121	0.01155	-0.00011	-0.0703	-0.0002	0.0227	0
97	SLU 122	0.02157	-0.00011	-0.16713	-0.0002	0.0606	0
97	SLU 123	0.01155	-0.0001	-0.0703	-0.0002	0.0227	0
97	SLU 124	0.02157	-0.0001	-0.16713	-0.0002	0.0606	0
97	SLU 125	0.01151	-0.00032	-0.06932	-0.0001	0.0222	0
97	SLU 126	0.02153	-0.00032	-0.16616	-0.0001	0.0601	0
97	SLU 127	0.01151	-0.00031	-0.06932	-0.0001	0.0222	0
97	SLU 128	0.02153	-0.00031	-0.16616	-0.0001	0.0601	0
97	SLU 129	0.01191	-0.00032	-0.07201	-0.0001	0.0229	0
97	SLU 130	0.02193	-0.00032	-0.16885	-0.0001	0.0608	0
97	SLU 131	0.01191	-0.00031	-0.07201	-0.0001	0.0229	0
97	SLU 132	0.02193	-0.00031	-0.16885	-0.0001	0.0608	0
97	SLE RA 1	0.00788	0.00002	-0.04768	-0.0002	0.0159	0
97	SLE RA 2	0.01678	0.00002	-0.13376	-0.0002	0.0496	0
97	SLE RA 3	0.01678	0.00002	-0.13376	-0.0002	0.0496	0
97	SLE RA 4	0.00788	0.00003	-0.04768	-0.0002	0.0159	0
97	SLE RA 5	0.01455	0.00003	-0.11224	-0.0002	0.0412	0
97	SLE RA 6	0.01705	0.00002	-0.13555	-0.0002	0.0501	0
97	SLE RA 7	0.01705	0.00002	-0.13555	-0.0002	0.0501	0
97	SLE RA 8	0.00815	0.00004	-0.04948	-0.0002	0.0164	0
97	SLE RA 9	0.01482	0.00004	-0.11403	-0.0002	0.0416	0
97	SLE RA 10	0.00841	0.00002	-0.05127	-0.0002	0.0169	0

Nodo	Cont.	Spostamento			Rotazione		
Ind.	N.br.	ux	uy	uz	rx	ry	rz
97	SLE RA 11	0.01509	0.00002	-0.11582	-0.0002	0.0421	0
97	SLE RA 12	0.00841	0.00002	-0.05127	-0.0002	0.0169	0
97	SLE RA 13	0.01509	0.00002	-0.11582	-0.0002	0.0421	0
97	SLE RA 14	0.01712	-0.00007	-0.13572	-0.0001	0.05	0
97	SLE RA 15	0.01712	-0.00007	-0.13572	-0.0001	0.05	0
97	SLE RA 16	0.00822	-0.00006	-0.04964	-0.0001	0.0163	0
97	SLE RA 17	0.01489	-0.00006	-0.1142	-0.0001	0.0416	0
97	SLE RA 18	0.01739	-0.00007	-0.13751	-0.0001	0.0505	0
97	SLE RA 19	0.01739	-0.00007	-0.13751	-0.0001	0.0505	0
97	SLE RA 20	0.00849	-0.00005	-0.05143	-0.0002	0.0168	0
97	SLE RA 21	0.01516	-0.00005	-0.11599	-0.0001	0.0421	0
97	SLE RA 22	0.00875	-0.00007	-0.05322	-0.0001	0.0173	0
97	SLE RA 23	0.01543	-0.00007	-0.11778	-0.0001	0.0425	0
97	SLE RA 24	0.00875	-0.00007	-0.05322	-0.0001	0.0173	0
97	SLE RA 25	0.01543	-0.00007	-0.11778	-0.0001	0.0425	0
97	SLE RA 26	0.00873	-0.00021	-0.05257	-0.0001	0.0169	0
97	SLE RA 27	0.0154	-0.00021	-0.11713	-0.0001	0.0422	0
97	SLE RA 28	0.00873	-0.0002	-0.05257	-0.0001	0.0169	0
97	SLE RA 29	0.0154	-0.0002	-0.11713	-0.0001	0.0422	0
97	SLE RA 30	0.00899	-0.00021	-0.05436	-0.0001	0.0174	0
97	SLE RA 31	0.01567	-0.00021	-0.11892	-0.0001	0.0427	0
97	SLE RA 32	0.00899	-0.0002	-0.05436	-0.0001	0.0174	0
97	SLE RA 33	0.01567	-0.0002	-0.11892	-0.0001	0.0427	0
97	SLE FR 1	0.00788	0.00002	-0.04768	-0.0002	0.0159	0
97	SLE FR 2	0.01455	0.00002	-0.11224	-0.0002	0.0412	0
97	SLE FR 3	0.00788	0.00002	-0.04768	-0.0002	0.0159	0
97	SLE FR 4	0.00799	0.00002	-0.0484	-0.0002	0.0161	0
97	SLE FR 5	0.00822	-0.00007	-0.04964	-0.0001	0.0163	0
97	SLE QP 1	0.00788	0.00002	-0.04768	-0.0002	0.0159	0
97	SLO 1	-0.00236	-0.32025	-0.04333	0.2746	0.0172	-0.0117
97	SLO 2	-0.00236	-0.32025	-0.04333	0.2746	0.0172	-0.0117
97	SLO 3	-0.00236	0.32028	-0.04333	-0.2749	0.0172	0.0116
97	SLO 4	-0.00236	0.32028	-0.04333	-0.2749	0.0172	0.0116
97	SLO 5	0.00481	-1.06755	-0.04638	0.9157	0.0163	-0.0389
97	SLO 6	0.00481	-1.06755	-0.04638	0.9157	0.0163	-0.0389
97	SLO 7	0.00481	1.06758	-0.04638	-0.9161	0.0163	0.0389
97	SLO 8	0.00481	1.06758	-0.04638	-0.9161	0.0163	0.0389
97	SLO 9	0.01095	-1.06755	-0.04899	0.9157	0.0155	-0.0389
97	SLO 10	0.01095	-1.06755	-0.04899	0.9157	0.0155	-0.0389
97	SLO 11	0.01095	1.06758	-0.04899	-0.9161	0.0155	0.0389
97	SLO 12	0.01095	1.06758	-0.04899	-0.9161	0.0155	0.0389
97	SLO 13	0.01812	-0.32025	-0.05204	0.2746	0.0146	-0.0117
97	SLO 14	0.01812	-0.32025	-0.05204	0.2746	0.0146	-0.0117
97	SLO 15	0.01812	0.32028	-0.05204	-0.2749	0.0146	0.0116
97	SLO 16	0.01812	0.32028	-0.05204	-0.2749	0.0146	0.0116
97	SLD 1	-0.00054	-0.29591	-0.04411	0.2537	0.017	-0.0108
97	SLD 2	-0.00054	-0.29591	-0.04411	0.2537	0.017	-0.0108
97	SLD 3	-0.00054	0.29594	-0.04411	-0.254	0.017	0.0108
97	SLD 4	-0.00054	0.29594	-0.04411	-0.254	0.017	0.0108
97	SLD 5	0.00536	-0.9864	-0.04661	0.8461	0.0162	-0.036
97	SLD 6	0.00536	-0.9864	-0.04661	0.8461	0.0162	-0.036
97	SLD 7	0.00536	0.98643	-0.04661	-0.8464	0.0162	0.0359
97	SLD 8	0.00536	0.98643	-0.04661	-0.8464	0.0162	0.0359
97	SLD 9	0.0104	-0.9864	-0.04876	0.8461	0.0156	-0.036
97	SLD 10	0.0104	-0.9864	-0.04876	0.8461	0.0156	-0.036
97	SLD 11	0.0104	0.98643	-0.04876	-0.8464	0.0156	0.0359
97	SLD 12	0.0104	0.98643	-0.04876	-0.8464	0.0156	0.0359
97	SLD 13	0.0163	-0.29591	-0.05126	0.2537	0.0148	-0.0108
97	SLD 14	0.0163	-0.29591	-0.05126	0.2537	0.0148	-0.0108
97	SLD 15	0.0163	0.29594	-0.05126	-0.254	0.0148	0.0108
97	SLD 16	0.0163	0.29594	-0.05126	-0.254	0.0148	0.0108
97	SLV 1	-0.01026	-0.78049	-0.03997	0.6695	0.0182	-0.0285
97	SLV 2	-0.01026	-0.78049	-0.03997	0.6695	0.0182	-0.0285
97	SLV 3	-0.01026	0.78052	-0.03997	-0.6698	0.0182	0.0284
97	SLV 4	-0.01026	0.78052	-0.03997	-0.6698	0.0182	0.0284
97	SLV 5	0.00244	-2.60166	-0.04537	2.2319	0.0166	-0.0948
97	SLV 6	0.00244	-2.60166	-0.04537	2.2319	0.0166	-0.0948
97	SLV 7	0.00244	2.60169	-0.04537	-2.2322	0.0166	0.0947
97	SLV 8	0.00244	2.60169	-0.04537	-2.2322	0.0166	0.0947
97	SLV 9	0.01332	-2.60166	-0.05	2.2319	0.0152	-0.0948
97	SLV 10	0.01332	-2.60166	-0.05	2.2319	0.0152	-0.0948
97	SLV 11	0.01332	2.60169	-0.05	-2.2322	0.0152	0.0947
97	SLV 12	0.01332	2.60169	-0.05	-2.2322	0.0152	0.0947
97	SLV 13	0.02601	-0.78049	-0.05539	0.6695	0.0135	-0.0285
97	SLV 14	0.02601	-0.78049	-0.05539	0.6695	0.0135	-0.0285
97	SLV 15	0.02601	0.78052	-0.0554	-0.6698	0.0135	0.0284
97	SLV 16	0.02601	0.78052	-0.0554	-0.6698	0.0135	0.0284
98	SLU 1	-0.00788	0.00002	-0.04768	-0.0002	-0.0159	0
98	SLU 2	-0.02123	0.00002	-0.1768	-0.0002	-0.0664	0
98	SLU 3	-0.02123	0.00003	-0.1768	-0.0002	-0.0664	0
98	SLU 4	-0.00788	0.00004	-0.04768	-0.0002	-0.0159	0
98	SLU 5	-0.01789	0.00004	-0.14452	-0.0002	-0.0538	0
98	SLU 6	-0.02163	0.00002	-0.17948	-0.0002	-0.0672	0
98	SLU 7	-0.02163	0.00003	-0.17948	-0.0002	-0.0672	0
98	SLU 8	-0.00828	0.00005	-0.05037	-0.0002	-0.0166	0
98	SLU 9	-0.01829	0.00004	-0.1472	-0.0002	-0.0545	0
98	SLU 10	-0.00868	0.00002	-0.05305	-0.0002	-0.0173	0
98	SLU 11	-0.01869	0.00002	-0.14989	-0.0002	-0.0553	0
98	SLU 12	-0.00868	0.00003	-0.05305	-0.0002	-0.0173	0
98	SLU 13	-0.01869	0.00003	-0.14989	-0.0002	-0.0553	0
98	SLU 14	-0.02173	-0.00012	-0.17973	-0.0001	-0.067	0
98	SLU 15	-0.02173	-0.00011	-0.17973	-0.0001	-0.067	0
98	SLU 16	-0.00838	-0.00009	-0.05061	-0.0001	-0.0165	0
98	SLU 17	-0.0184	-0.00009	-0.14745	-0.0001	-0.0544	0
98	SLU 18	-0.02213	-0.00012	-0.18241	-0.0001	-0.0678	0

Nodo	Cont.	Spostamento			Rotazione		
Ind.	N.br.	ux	uy	uz	rx	ry	rz
98	SLU 19	-0.02213	-0.00011	-0.18241	-0.0001	-0.0678	0
98	SLU 20	-0.00878	-0.00009	-0.05329	-0.0001	-0.0172	0
98	SLU 21	-0.01879	-0.00009	-0.15013	-0.0001	-0.0551	0
98	SLU 22	-0.00918	-0.00012	-0.05597	-0.0001	-0.0179	0
98	SLU 23	-0.01919	-0.00012	-0.15281	-0.0001	-0.0559	0
98	SLU 24	-0.00918	-0.00011	-0.05597	-0.0001	-0.0179	0
98	SLU 25	-0.01919	-0.00011	-0.15281	-0.0001	-0.0559	0
98	SLU 26	-0.00914	-0.00032	-0.055	-0.0001	-0.0174	0
98	SLU 27	-0.01915	-0.00032	-0.15184	-0.0001	-0.0553	0
98	SLU 28	-0.00914	-0.00031	-0.055	-0.0001	-0.0174	0
98	SLU 29	-0.01915	-0.00031	-0.15184	-0.0001	-0.0553	0
98	SLU 30	-0.00954	-0.00032	-0.05768	-0.0001	-0.0181	0
98	SLU 31	-0.01955	-0.00032	-0.15452	-0.0001	-0.056	0
98	SLU 32	-0.00954	-0.00031	-0.05768	-0.0001	-0.0181	0
98	SLU 33	-0.01955	-0.00031	-0.15452	-0.0001	-0.056	0
98	SLU 34	-0.00788	0.00002	-0.04768	-0.0002	-0.0159	0
98	SLU 35	-0.02123	0.00002	-0.1768	-0.0002	-0.0664	0
98	SLU 36	-0.02123	0.00003	-0.1768	-0.0002	-0.0664	0
98	SLU 37	-0.00788	0.00004	-0.04768	-0.0002	-0.0159	0
98	SLU 38	-0.01789	0.00004	-0.14452	-0.0002	-0.0538	0
98	SLU 39	-0.02163	0.00002	-0.17948	-0.0002	-0.0672	0
98	SLU 40	-0.02163	0.00003	-0.17948	-0.0002	-0.0672	0
98	SLU 41	-0.00828	0.00005	-0.05037	-0.0002	-0.0166	0
98	SLU 42	-0.01829	0.00004	-0.1472	-0.0002	-0.0545	0
98	SLU 43	-0.00868	0.00002	-0.05305	-0.0002	-0.0173	0
98	SLU 44	-0.01869	0.00002	-0.14989	-0.0002	-0.0553	0
98	SLU 45	-0.00868	0.00003	-0.05305	-0.0002	-0.0173	0
98	SLU 46	-0.01869	0.00003	-0.14989	-0.0002	-0.0553	0
98	SLU 47	-0.02173	-0.00012	-0.17973	-0.0001	-0.067	0
98	SLU 48	-0.02173	-0.00011	-0.17973	-0.0001	-0.067	0
98	SLU 49	-0.00838	-0.00009	-0.05061	-0.0001	-0.0165	0
98	SLU 50	-0.0184	-0.00009	-0.14745	-0.0001	-0.0544	0
98	SLU 51	-0.02213	-0.00012	-0.18241	-0.0001	-0.0678	0
98	SLU 52	-0.02213	-0.00011	-0.18241	-0.0001	-0.0678	0
98	SLU 53	-0.00878	-0.00009	-0.05329	-0.0001	-0.0172	0
98	SLU 54	-0.01879	-0.00009	-0.15013	-0.0001	-0.0551	0
98	SLU 55	-0.00918	-0.00012	-0.05597	-0.0001	-0.0179	0
98	SLU 56	-0.01919	-0.00012	-0.15281	-0.0001	-0.0559	0
98	SLU 57	-0.00918	-0.00011	-0.05597	-0.0001	-0.0179	0
98	SLU 58	-0.01919	-0.00011	-0.15281	-0.0001	-0.0559	0
98	SLU 59	-0.00914	-0.00032	-0.055	-0.0001	-0.0174	0
98	SLU 60	-0.01915	-0.00032	-0.15184	-0.0001	-0.0553	0
98	SLU 61	-0.00914	-0.00031	-0.055	-0.0001	-0.0174	0
98	SLU 62	-0.01915	-0.00031	-0.15184	-0.0001	-0.0553	0
98	SLU 63	-0.00954	-0.00032	-0.05768	-0.0001	-0.0181	0
98	SLU 64	-0.01955	-0.00032	-0.15452	-0.0001	-0.056	0
98	SLU 65	-0.00954	-0.00031	-0.05768	-0.0001	-0.0181	0
98	SLU 66	-0.01955	-0.00031	-0.15452	-0.0001	-0.056	0
98	SLU 67	-0.01024	0.00002	-0.06199	-0.0002	-0.0207	0
98	SLU 68	-0.02359	0.00002	-0.19111	-0.0002	-0.0712	0
98	SLU 69	-0.02359	0.00003	-0.19111	-0.0002	-0.0712	0
98	SLU 70	-0.01024	0.00005	-0.06199	-0.0002	-0.0207	0
98	SLU 71	-0.02026	0.00005	-0.15883	-0.0002	-0.0586	0
98	SLU 72	-0.02399	0.00002	-0.19379	-0.0002	-0.0719	0
98	SLU 73	-0.02399	0.00003	-0.19379	-0.0002	-0.0719	0
98	SLU 74	-0.01064	0.00005	-0.06467	-0.0002	-0.0214	0
98	SLU 75	-0.02065	0.00005	-0.16151	-0.0002	-0.0593	0
98	SLU 76	-0.01104	0.00002	-0.06735	-0.0002	-0.0221	0
98	SLU 77	-0.02105	0.00002	-0.16419	-0.0002	-0.06	0
98	SLU 78	-0.01104	0.00003	-0.06735	-0.0002	-0.0221	0
98	SLU 79	-0.02105	0.00003	-0.16419	-0.0002	-0.06	0
98	SLU 80	-0.0241	-0.00012	-0.19403	-0.0002	-0.0718	0
98	SLU 81	-0.0241	-0.0001	-0.19403	-0.0002	-0.0718	0
98	SLU 82	-0.01075	-0.00009	-0.06492	-0.0002	-0.0213	0
98	SLU 83	-0.02076	-0.00009	-0.16175	-0.0002	-0.0592	0
98	SLU 84	-0.0245	-0.00012	-0.19671	-0.0002	-0.0725	0
98	SLU 85	-0.0245	-0.0001	-0.19671	-0.0002	-0.0725	0
98	SLU 86	-0.01115	-0.00009	-0.0676	-0.0002	-0.022	0
98	SLU 87	-0.02116	-0.00009	-0.16443	-0.0002	-0.0599	0
98	SLU 88	-0.01154	-0.00011	-0.07028	-0.0002	-0.0227	0
98	SLU 89	-0.02156	-0.00011	-0.16712	-0.0002	-0.0606	0
98	SLU 90	-0.01154	-0.0001	-0.07028	-0.0002	-0.0227	0
98	SLU 91	-0.02156	-0.0001	-0.16712	-0.0002	-0.0606	0
98	SLU 92	-0.0115	-0.00032	-0.0693	-0.0001	-0.0222	0
98	SLU 93	-0.02152	-0.00032	-0.16614	-0.0001	-0.0601	0
98	SLU 94	-0.0115	-0.00031	-0.0693	-0.0001	-0.0222	0
98	SLU 95	-0.02152	-0.00031	-0.16614	-0.0001	-0.0601	0
98	SLU 96	-0.0119	-0.00032	-0.07198	-0.0001	-0.0229	0
98	SLU 97	-0.02192	-0.00032	-0.16882	-0.0001	-0.0608	0
98	SLU 98	-0.0119	-0.00031	-0.07198	-0.0001	-0.0229	0
98	SLU 99	-0.02192	-0.00031	-0.16882	-0.0001	-0.0608	0
98	SLU 100	-0.01024	0.00002	-0.06199	-0.0002	-0.0207	0
98	SLU 101	-0.02359	0.00002	-0.19111	-0.0002	-0.0712	0
98	SLU 102	-0.02359	0.00003	-0.19111	-0.0002	-0.0712	0
98	SLU 103	-0.01024	0.00005	-0.06199	-0.0002	-0.0207	0
98	SLU 104	-0.02026	0.00005	-0.15883	-0.0002	-0.0586	0
98	SLU 105	-0.02399	0.00002	-0.19379	-0.0002	-0.0719	0
98	SLU 106	-0.02399	0.00003	-0.19379	-0.0002	-0.0719	0
98	SLU 107	-0.01064	0.00005	-0.06467	-0.0002	-0.0214	0
98	SLU 108	-0.02065	0.00005	-0.16151	-0.0002	-0.0593	0
98	SLU 109	-0.01104	0.00002	-0.06735	-0.0002	-0.0221	0
98	SLU 110	-0.02105	0.00002	-0.16419	-0.0002	-0.06	0
98	SLU 111	-0.01104	0.00003	-0.06735	-0.0002	-0.0221	0
98	SLU 112	-0.02105	0.00003	-0.16419	-0.0002	-0.06	0
98	SLU 113	-0.0241	-0.00012	-0.19403	-0.0002	-0.0718	0

Nodo	Cont.	Spostamento			Rotazione		
Ind.	N.br.	ux	uy	uz	rx	ry	rz
98	SLU 114	-0.0241	-0.0001	-0.19403	-0.0002	-0.0718	0
98	SLU 115	-0.01075	-0.00009	-0.06492	-0.0002	-0.0213	0
98	SLU 116	-0.02076	-0.00009	-0.16175	-0.0002	-0.0592	0
98	SLU 117	-0.0245	-0.00012	-0.19671	-0.0002	-0.0725	0
98	SLU 118	-0.0245	-0.0001	-0.19671	-0.0002	-0.0725	0
98	SLU 119	-0.01115	-0.00009	-0.0676	-0.0002	-0.022	0
98	SLU 120	-0.02116	-0.00009	-0.16443	-0.0002	-0.0599	0
98	SLU 121	-0.01154	-0.00011	-0.07028	-0.0002	-0.0227	0
98	SLU 122	-0.02156	-0.00011	-0.16712	-0.0002	-0.0606	0
98	SLU 123	-0.01154	-0.0001	-0.07028	-0.0002	-0.0227	0
98	SLU 124	-0.02156	-0.0001	-0.16712	-0.0002	-0.0606	0
98	SLU 125	-0.0115	-0.00032	-0.0693	-0.0001	-0.0222	0
98	SLU 126	-0.02152	-0.00032	-0.16614	-0.0001	-0.0601	0
98	SLU 127	-0.0115	-0.00031	-0.0693	-0.0001	-0.0222	0
98	SLU 128	-0.02152	-0.00031	-0.16614	-0.0001	-0.0601	0
98	SLU 129	-0.0119	-0.00032	-0.07198	-0.0001	-0.0229	0
98	SLU 130	-0.02192	-0.00032	-0.16882	-0.0001	-0.0608	0
98	SLU 131	-0.0119	-0.00031	-0.07198	-0.0001	-0.0229	0
98	SLU 132	-0.02192	-0.00031	-0.16882	-0.0001	-0.0608	0
98	SLE RA 1	-0.00788	0.00002	-0.04768	-0.0002	-0.0159	0
98	SLE RA 2	-0.01678	0.00002	-0.13376	-0.0002	-0.0496	0
98	SLE RA 3	-0.01678	0.00002	-0.13376	-0.0002	-0.0496	0
98	SLE RA 4	-0.00788	0.00003	-0.04768	-0.0002	-0.0159	0
98	SLE RA 5	-0.01455	0.00003	-0.11224	-0.0002	-0.0412	0
98	SLE RA 6	-0.01705	0.00002	-0.13555	-0.0002	-0.0501	0
98	SLE RA 7	-0.01705	0.00002	-0.13555	-0.0002	-0.0501	0
98	SLE RA 8	-0.00815	0.00004	-0.04947	-0.0002	-0.0164	0
98	SLE RA 9	-0.01482	0.00004	-0.11403	-0.0002	-0.0416	0
98	SLE RA 10	-0.00841	0.00002	-0.05126	-0.0002	-0.0169	0
98	SLE RA 11	-0.01509	0.00002	-0.11582	-0.0002	-0.0421	0
98	SLE RA 12	-0.00841	0.00002	-0.05126	-0.0002	-0.0169	0
98	SLE RA 13	-0.01509	0.00002	-0.11582	-0.0002	-0.0421	0
98	SLE RA 14	-0.01712	-0.00008	-0.13571	-0.0001	-0.05	0
98	SLE RA 15	-0.01712	-0.00007	-0.13571	-0.0001	-0.05	0
98	SLE RA 16	-0.00822	-0.00006	-0.04963	-0.0001	-0.0163	0
98	SLE RA 17	-0.01489	-0.00006	-0.11419	-0.0001	-0.0416	0
98	SLE RA 18	-0.01738	-0.00007	-0.1375	-0.0001	-0.0505	0
98	SLE RA 19	-0.01738	-0.00007	-0.1375	-0.0001	-0.0505	0
98	SLE RA 20	-0.00848	-0.00005	-0.05142	-0.0002	-0.0168	0
98	SLE RA 21	-0.01516	-0.00006	-0.11598	-0.0001	-0.0421	0
98	SLE RA 22	-0.00875	-0.00007	-0.05321	-0.0001	-0.0173	0
98	SLE RA 23	-0.01542	-0.00007	-0.11777	-0.0001	-0.0425	0
98	SLE RA 24	-0.00875	-0.00007	-0.05321	-0.0001	-0.0173	0
98	SLE RA 25	-0.01542	-0.00007	-0.11777	-0.0001	-0.0425	0
98	SLE RA 26	-0.00872	-0.00021	-0.05256	-0.0001	-0.0169	0
98	SLE RA 27	-0.0154	-0.00021	-0.11712	-0.0001	-0.0422	0
98	SLE RA 28	-0.00872	-0.0002	-0.05256	-0.0001	-0.0169	0
98	SLE RA 29	-0.0154	-0.0002	-0.11712	-0.0001	-0.0422	0
98	SLE RA 30	-0.00899	-0.00021	-0.05435	-0.0001	-0.0174	0
98	SLE RA 31	-0.01566	-0.00021	-0.11891	-0.0001	-0.0427	0
98	SLE RA 32	-0.00899	-0.0002	-0.05435	-0.0001	-0.0174	0
98	SLE RA 33	-0.01566	-0.0002	-0.11891	-0.0001	-0.0427	0
98	SLE FR 1	-0.00788	0.00002	-0.04768	-0.0002	-0.0159	0
98	SLE FR 2	-0.01455	0.00002	-0.11224	-0.0002	-0.0412	0
98	SLE FR 3	-0.00788	0.00002	-0.04768	-0.0002	-0.0159	0
98	SLE FR 4	-0.00799	0.00002	-0.0484	-0.0002	-0.0161	0
98	SLE FR 5	-0.00822	-0.00007	-0.04963	-0.0001	-0.0163	0
98	SLE QP 1	-0.00788	0.00002	-0.04768	-0.0002	-0.0159	0
98	SLO 1	-0.01812	-0.32025	-0.05204	0.2746	-0.0146	0.0117
98	SLO 2	-0.01812	-0.32025	-0.05204	0.2746	-0.0146	0.0117
98	SLO 3	-0.01812	0.32028	-0.05204	-0.2749	-0.0146	-0.0116
98	SLO 4	-0.01812	0.32028	-0.05204	-0.2749	-0.0146	-0.0116
98	SLO 5	-0.01095	-1.06755	-0.04899	0.9157	-0.0155	0.0389
98	SLO 6	-0.01095	-1.06755	-0.04899	0.9157	-0.0155	0.0389
98	SLO 7	-0.01095	1.06758	-0.04899	-0.9161	-0.0155	-0.0389
98	SLO 8	-0.01095	1.06758	-0.04899	-0.9161	-0.0155	-0.0389
98	SLO 9	-0.00481	-1.06755	-0.04638	0.9157	-0.0163	0.0389
98	SLO 10	-0.00481	-1.06755	-0.04638	0.9157	-0.0163	0.0389
98	SLO 11	-0.00481	1.06758	-0.04638	-0.9161	-0.0163	-0.0389
98	SLO 12	-0.00481	1.06758	-0.04638	-0.9161	-0.0163	-0.0389
98	SLO 13	0.00236	-0.32025	-0.04333	0.2746	-0.0172	0.0117
98	SLO 14	0.00236	-0.32025	-0.04333	0.2746	-0.0172	0.0117
98	SLO 15	0.00236	0.32028	-0.04333	-0.2749	-0.0172	-0.0116
98	SLO 16	0.00236	0.32028	-0.04333	-0.2749	-0.0172	-0.0116
98	SLD 1	-0.0163	-0.29591	-0.05126	0.2537	-0.0148	0.0108
98	SLD 2	-0.0163	-0.29591	-0.05126	0.2537	-0.0148	0.0108
98	SLD 3	-0.0163	0.29594	-0.05126	-0.254	-0.0148	-0.0108
98	SLD 4	-0.0163	0.29594	-0.05126	-0.254	-0.0148	-0.0108
98	SLD 5	-0.0104	-0.9864	-0.04876	0.8461	-0.0156	0.036
98	SLD 6	-0.0104	-0.9864	-0.04876	0.8461	-0.0156	0.036
98	SLD 7	-0.0104	0.98643	-0.04876	-0.8464	-0.0156	-0.0359
98	SLD 8	-0.0104	0.98643	-0.04876	-0.8464	-0.0156	-0.0359
98	SLD 9	-0.00536	-0.9864	-0.04661	0.8461	-0.0162	0.036
98	SLD 10	-0.00536	-0.9864	-0.04661	0.8461	-0.0162	0.036
98	SLD 11	-0.00536	0.98643	-0.04661	-0.8464	-0.0162	-0.0359
98	SLD 12	-0.00536	0.98643	-0.04661	-0.8464	-0.0162	-0.0359
98	SLD 13	0.00054	-0.29591	-0.04411	0.2537	-0.017	0.0108
98	SLD 14	0.00054	-0.29591	-0.04411	0.2537	-0.017	0.0108
98	SLD 15	0.00054	0.29594	-0.04411	-0.254	-0.017	-0.0108
98	SLD 16	0.00054	0.29594	-0.04411	-0.254	-0.017	-0.0108
98	SLV 1	-0.02601	-0.78049	-0.05539	0.6695	-0.0135	0.0285
98	SLV 2	-0.02601	-0.78049	-0.05539	0.6695	-0.0135	0.0285
98	SLV 3	-0.02601	0.78052	-0.0554	-0.6698	-0.0135	-0.0284
98	SLV 4	-0.02601	0.78052	-0.0554	-0.6698	-0.0135	-0.0284
98	SLV 5	-0.01332	-2.60166	-0.05	2.2319	-0.0152	0.0948

Nodo	Cont.	Spostamento			Rotazione		
Ind.	N.br.	ux	uy	uz	rx	ry	rz
98	SLV 6	-0.01332	-2.60166	-0.05	2.2319	-0.0152	0.0948
98	SLV 7	-0.01332	2.60169	-0.05	-2.2322	-0.0152	-0.0947
98	SLV 8	-0.01332	2.60169	-0.05	-2.2322	-0.0152	-0.0947
98	SLV 9	-0.00244	-2.60166	-0.04537	2.2319	-0.0166	0.0948
98	SLV 10	-0.00244	-2.60166	-0.04537	2.2319	-0.0166	0.0948
98	SLV 11	-0.00244	2.60169	-0.04537	-2.2322	-0.0166	-0.0947
98	SLV 12	-0.00244	2.60169	-0.04537	-2.2322	-0.0166	-0.0947
98	SLV 13	0.01026	-0.78049	-0.03997	0.6695	-0.0182	0.0285
98	SLV 14	0.01026	-0.78049	-0.03997	0.6695	-0.0182	0.0285
98	SLV 15	0.01026	0.78052	-0.03997	-0.6698	-0.0182	-0.0284
98	SLV 16	0.01026	0.78052	-0.03997	-0.6698	-0.0182	-0.0284
99	SLU 1	0.00792	0.00001	-0.04794	-0.0001	0.0159	0
99	SLU 2	0.03462	0.00001	-0.30616	-0.0001	0.117	0
99	SLU 3	0.03462	0.00002	-0.30616	-0.0001	0.117	0
99	SLU 4	0.00792	0.00004	-0.04794	-0.0001	0.0159	0
99	SLU 5	0.02794	0.00004	-0.2416	-0.0001	0.0918	0
99	SLU 6	0.03486	0.00001	-0.30886	-0.0001	0.1179	0
99	SLU 7	0.03486	0.00002	-0.30886	-0.0001	0.1179	0
99	SLU 8	0.00816	0.00004	-0.05064	-0.0001	0.0168	0
99	SLU 9	0.02818	0.00004	-0.24431	-0.0001	0.0926	0
99	SLU 10	0.0084	0.00001	-0.05334	-0.0001	0.0176	0
99	SLU 11	0.02842	0.00001	-0.24701	-0.0001	0.0934	0
99	SLU 12	0.0084	0.00002	-0.05334	-0.0001	0.0176	0
99	SLU 13	0.02842	0.00002	-0.24701	-0.0001	0.0934	0
99	SLU 14	0.0347	-0.00013	-0.30757	0	0.1172	0
99	SLU 15	0.0347	-0.00012	-0.30757	0	0.1172	0
99	SLU 16	0.008	-0.0001	-0.04935	0	0.0161	0
99	SLU 17	0.02802	-0.0001	-0.24302	0	0.0919	0
99	SLU 18	0.03494	-0.00013	-0.31028	0	0.118	0
99	SLU 19	0.03494	-0.00012	-0.31028	0	0.118	0
99	SLU 20	0.00824	-0.0001	-0.05206	0	0.0169	0
99	SLU 21	0.02826	-0.0001	-0.24572	0	0.0927	0
99	SLU 22	0.00848	-0.00013	-0.05476	0	0.0178	0
99	SLU 23	0.0285	-0.00013	-0.24843	0	0.0936	0
99	SLU 24	0.00848	-0.00012	-0.05476	0	0.0178	0
99	SLU 25	0.0285	-0.00012	-0.24843	0	0.0936	0
99	SLU 26	0.00812	-0.00033	-0.05147	0	0.0163	0
99	SLU 27	0.02814	-0.00033	-0.24514	0	0.0922	0
99	SLU 28	0.00812	-0.00032	-0.05147	0	0.0163	0
99	SLU 29	0.02814	-0.00032	-0.24514	0	0.0922	0
99	SLU 30	0.00836	-0.00033	-0.05418	0	0.0172	0
99	SLU 31	0.02838	-0.00033	-0.24784	0	0.093	0
99	SLU 32	0.00836	-0.00032	-0.05418	0	0.0172	0
99	SLU 33	0.02838	-0.00032	-0.24784	0	0.093	0
99	SLU 34	0.00792	0.00001	-0.04794	-0.0001	0.0159	0
99	SLU 35	0.03462	0.00001	-0.30616	-0.0001	0.117	0
99	SLU 36	0.03462	0.00002	-0.30616	-0.0001	0.117	0
99	SLU 37	0.00792	0.00004	-0.04794	-0.0001	0.0159	0
99	SLU 38	0.02794	0.00004	-0.2416	-0.0001	0.0918	0
99	SLU 39	0.03486	0.00001	-0.30886	-0.0001	0.1179	0
99	SLU 40	0.03486	0.00002	-0.30886	-0.0001	0.1179	0
99	SLU 41	0.00816	0.00004	-0.05064	-0.0001	0.0168	0
99	SLU 42	0.02818	0.00004	-0.24431	-0.0001	0.0926	0
99	SLU 43	0.0084	0.00001	-0.05334	-0.0001	0.0176	0
99	SLU 44	0.02842	0.00001	-0.24701	-0.0001	0.0934	0
99	SLU 45	0.0084	0.00002	-0.05334	-0.0001	0.0176	0
99	SLU 46	0.02842	0.00002	-0.24701	-0.0001	0.0934	0
99	SLU 47	0.0347	-0.00013	-0.30757	0	0.1172	0
99	SLU 48	0.0347	-0.00012	-0.30757	0	0.1172	0
99	SLU 49	0.008	-0.0001	-0.04935	0	0.0161	0
99	SLU 50	0.02802	-0.0001	-0.24302	0	0.0919	0
99	SLU 51	0.03494	-0.00013	-0.31028	0	0.118	0
99	SLU 52	0.03494	-0.00012	-0.31028	0	0.118	0
99	SLU 53	0.00824	-0.0001	-0.05206	0	0.0169	0
99	SLU 54	0.02826	-0.0001	-0.24572	0	0.0927	0
99	SLU 55	0.00848	-0.00013	-0.05476	0	0.0178	0
99	SLU 56	0.0285	-0.00013	-0.24843	0	0.0936	0
99	SLU 57	0.00848	-0.00012	-0.05476	0	0.0178	0
99	SLU 58	0.0285	-0.00012	-0.24843	0	0.0936	0
99	SLU 59	0.00812	-0.00033	-0.05147	0	0.0163	0
99	SLU 60	0.02814	-0.00033	-0.24514	0	0.0922	0
99	SLU 61	0.00812	-0.00032	-0.05147	0	0.0163	0
99	SLU 62	0.02814	-0.00032	-0.24514	0	0.0922	0
99	SLU 63	0.00836	-0.00033	-0.05418	0	0.0172	0
99	SLU 64	0.02838	-0.00033	-0.24784	0	0.093	0
99	SLU 65	0.00836	-0.00032	-0.05418	0	0.0172	0
99	SLU 66	0.02838	-0.00032	-0.24784	0	0.093	0
99	SLU 67	0.0103	0.00001	-0.06232	-0.0001	0.0207	0
99	SLU 68	0.03699	0.00001	-0.32054	-0.0001	0.1218	0
99	SLU 69	0.03699	0.00002	-0.32054	-0.0001	0.1218	0
99	SLU 70	0.0103	0.00004	-0.06232	-0.0001	0.0207	0
99	SLU 71	0.03032	0.00004	-0.25599	-0.0001	0.0965	0
99	SLU 72	0.03723	0.00001	-0.32324	-0.0001	0.1226	0
99	SLU 73	0.03723	0.00002	-0.32324	-0.0001	0.1226	0
99	SLU 74	0.01054	0.00004	-0.06502	-0.0001	0.0215	0
99	SLU 75	0.03056	0.00004	-0.25869	-0.0001	0.0974	0
99	SLU 76	0.01077	0.00001	-0.06773	-0.0001	0.0224	0
99	SLU 77	0.0308	0.00001	-0.26139	-0.0001	0.0982	0
99	SLU 78	0.01077	0.00002	-0.06773	-0.0001	0.0224	0
99	SLU 79	0.0308	0.00002	-0.26139	-0.0001	0.0982	0
99	SLU 80	0.03707	-0.00013	-0.32196	0	0.122	0
99	SLU 81	0.03707	-0.00011	-0.32196	-0.0001	0.122	0
99	SLU 82	0.01038	-0.0001	-0.06373	-0.0001	0.0209	0
99	SLU 83	0.0304	-0.0001	-0.2574	-0.0001	0.0967	0
99	SLU 84	0.03731	-0.00013	-0.32466	-0.0001	0.1228	0

Nodo	Cont.	Spostamento			Rotazione		
Ind.	N.br.	ux	uy	uz	rx	ry	rz
99	SLU 85	0.03731	-0.00011	-0.32466	-0.0001	0.1228	0
99	SLU 86	0.01062	-0.0001	-0.06644	-0.0001	0.0217	0
99	SLU 87	0.03064	-0.0001	-0.2601	-0.0001	0.0975	0
99	SLU 88	0.01085	-0.00013	-0.06914	-0.0001	0.0225	0
99	SLU 89	0.03088	-0.00013	-0.26281	-0.0001	0.0984	0
99	SLU 90	0.01085	-0.00011	-0.06914	-0.0001	0.0225	0
99	SLU 91	0.03088	-0.00011	-0.26281	-0.0001	0.0984	0
99	SLU 92	0.01049	-0.00033	-0.06586	0	0.0211	0
99	SLU 93	0.03052	-0.00033	-0.25952	0	0.0969	0
99	SLU 94	0.01049	-0.00032	-0.06586	0	0.0211	0
99	SLU 95	0.03052	-0.00032	-0.25952	0	0.0969	0
99	SLU 96	0.01073	-0.00033	-0.06856	0	0.022	0
99	SLU 97	0.03076	-0.00033	-0.26223	0	0.0978	0
99	SLU 98	0.01073	-0.00032	-0.06856	0	0.022	0
99	SLU 99	0.03076	-0.00032	-0.26223	0	0.0978	0
99	SLU 100	0.0103	0.00001	-0.06232	-0.0001	0.0207	0
99	SLU 101	0.03699	0.00001	-0.32054	-0.0001	0.1218	0
99	SLU 102	0.03699	0.00002	-0.32054	-0.0001	0.1218	0
99	SLU 103	0.0103	0.00004	-0.06232	-0.0001	0.0207	0
99	SLU 104	0.03032	0.00004	-0.25599	-0.0001	0.0965	0
99	SLU 105	0.03723	0.00001	-0.32324	-0.0001	0.1226	0
99	SLU 106	0.03723	0.00002	-0.32324	-0.0001	0.1226	0
99	SLU 107	0.01054	0.00004	-0.06502	-0.0001	0.0215	0
99	SLU 108	0.03056	0.00004	-0.25869	-0.0001	0.0974	0
99	SLU 109	0.01077	0.00001	-0.06773	-0.0001	0.0224	0
99	SLU 110	0.0308	0.00001	-0.26139	-0.0001	0.0982	0
99	SLU 111	0.01077	0.00002	-0.06773	-0.0001	0.0224	0
99	SLU 112	0.0308	0.00002	-0.26139	-0.0001	0.0982	0
99	SLU 113	0.03707	-0.00013	-0.32196	0	0.122	0
99	SLU 114	0.03707	-0.00011	-0.32196	-0.0001	0.122	0
99	SLU 115	0.01038	-0.0001	-0.06373	-0.0001	0.0209	0
99	SLU 116	0.0304	-0.0001	-0.2574	-0.0001	0.0967	0
99	SLU 117	0.03731	-0.00013	-0.32466	-0.0001	0.1228	0
99	SLU 118	0.03731	-0.00011	-0.32466	-0.0001	0.1228	0
99	SLU 119	0.01062	-0.0001	-0.06644	-0.0001	0.0217	0
99	SLU 120	0.03064	-0.0001	-0.2601	-0.0001	0.0975	0
99	SLU 121	0.01085	-0.00013	-0.06914	-0.0001	0.0225	0
99	SLU 122	0.03088	-0.00013	-0.26281	-0.0001	0.0984	0
99	SLU 123	0.01085	-0.00011	-0.06914	-0.0001	0.0225	0
99	SLU 124	0.03088	-0.00011	-0.26281	-0.0001	0.0984	0
99	SLU 125	0.01049	-0.00033	-0.06586	0	0.0211	0
99	SLU 126	0.03052	-0.00033	-0.25952	0	0.0969	0
99	SLU 127	0.01049	-0.00032	-0.06586	0	0.0211	0
99	SLU 128	0.03052	-0.00032	-0.25952	0	0.0969	0
99	SLU 129	0.01073	-0.00033	-0.06856	0	0.022	0
99	SLU 130	0.03076	-0.00033	-0.26223	0	0.0978	0
99	SLU 131	0.01073	-0.00032	-0.06856	0	0.022	0
99	SLU 132	0.03076	-0.00032	-0.26223	0	0.0978	0
99	SLE RA 1	0.00792	0.00001	-0.04794	-0.0001	0.0159	0
99	SLE RA 2	0.02572	0.00001	-0.22009	-0.0001	0.0833	0
99	SLE RA 3	0.02572	0.00002	-0.22009	-0.0001	0.0833	0
99	SLE RA 4	0.00792	0.00003	-0.04794	-0.0001	0.0159	0
99	SLE RA 5	0.02127	0.00003	-0.17705	-0.0001	0.0665	0
99	SLE RA 6	0.02588	0.00001	-0.22189	-0.0001	0.0839	0
99	SLE RA 7	0.02588	0.00002	-0.22189	-0.0001	0.0839	0
99	SLE RA 8	0.00808	0.00003	-0.04974	-0.0001	0.0165	0
99	SLE RA 9	0.02143	0.00003	-0.17885	-0.0001	0.067	0
99	SLE RA 10	0.00824	0.00001	-0.05154	-0.0001	0.017	0
99	SLE RA 11	0.02159	0.00001	-0.18065	-0.0001	0.0676	0
99	SLE RA 12	0.00824	0.00002	-0.05154	-0.0001	0.017	0
99	SLE RA 13	0.02159	0.00002	-0.18065	-0.0001	0.0676	0
99	SLE RA 14	0.02577	-0.00008	-0.22103	0	0.0834	0
99	SLE RA 15	0.02577	-0.00008	-0.22103	0	0.0834	0
99	SLE RA 16	0.00797	-0.00006	-0.04888	-0.0001	0.0161	0
99	SLE RA 17	0.02132	-0.00006	-0.17799	-0.0001	0.0666	0
99	SLE RA 18	0.02593	-0.00008	-0.22283	0	0.084	0
99	SLE RA 19	0.02593	-0.00008	-0.22283	0	0.084	0
99	SLE RA 20	0.00813	-0.00006	-0.05068	-0.0001	0.0166	0
99	SLE RA 21	0.02148	-0.00006	-0.17979	-0.0001	0.0671	0
99	SLE RA 22	0.00829	-0.00008	-0.05249	-0.0001	0.0171	0
99	SLE RA 23	0.02164	-0.00008	-0.1816	0	0.0677	0
99	SLE RA 24	0.00829	-0.00008	-0.05249	-0.0001	0.0171	0
99	SLE RA 25	0.02164	-0.00008	-0.1816	-0.0001	0.0677	0
99	SLE RA 26	0.00805	-0.00022	-0.0503	0	0.0162	0
99	SLE RA 27	0.0214	-0.00022	-0.17941	0	0.0668	0
99	SLE RA 28	0.00805	-0.00021	-0.0503	0	0.0162	0
99	SLE RA 29	0.0214	-0.00021	-0.17941	0	0.0668	0
99	SLE RA 30	0.00821	-0.00022	-0.0521	0	0.0168	0
99	SLE RA 31	0.02156	-0.00022	-0.18121	0	0.0673	0
99	SLE RA 32	0.00821	-0.00021	-0.0521	0	0.0168	0
99	SLE RA 33	0.02156	-0.00021	-0.18121	0	0.0673	0
99	SLE FR 1	0.00792	0.00001	-0.04794	-0.0001	0.0159	0
99	SLE FR 2	0.02127	0.00001	-0.17705	-0.0001	0.0665	0
99	SLE FR 3	0.00792	0.00002	-0.04794	-0.0001	0.0159	0
99	SLE FR 4	0.00798	0.00001	-0.04866	-0.0001	0.0162	0
99	SLE FR 5	0.00797	-0.00008	-0.04888	0	0.0161	0
99	SLE QP 1	0.00792	0.00001	-0.04794	-0.0001	0.0159	0
99	SLO 1	-0.00236	-0.32028	-0.04357	0.2749	0.0173	-0.0116
99	SLO 2	-0.00236	-0.32028	-0.04357	0.2749	0.0173	-0.0116
99	SLO 3	-0.00236	0.32029	-0.04357	-0.275	0.0173	0.0116
99	SLO 4	-0.00236	0.32029	-0.04357	-0.275	0.0173	0.0116
99	SLO 5	0.00484	-1.06762	-0.04663	0.9164	0.0163	-0.0387
99	SLO 6	0.00484	-1.06762	-0.04663	0.9164	0.0163	-0.0387
99	SLO 7	0.00484	1.06763	-0.04663	-0.9166	0.0163	0.0387
99	SLO 8	0.00484	1.06763	-0.04663	-0.9166	0.0163	0.0387

Nodo	Cont.	Spostamento			Rotazione		
Ind.	N.br.	ux	uy	uz	rx	ry	rz
99	SLO 9	0.01101	-1.06762	-0.04925	0.9164	0.0155	-0.0387
99	SLO 10	0.01101	-1.06762	-0.04925	0.9164	0.0155	-0.0387
99	SLO 11	0.01101	1.06763	-0.04925	-0.9166	0.0155	0.0387
99	SLO 12	0.01101	1.06763	-0.04925	-0.9166	0.0155	0.0387
99	SLO 13	0.0182	-0.32028	-0.05231	0.2749	0.0146	-0.0116
99	SLO 14	0.0182	-0.32028	-0.05231	0.2749	0.0146	-0.0116
99	SLO 15	0.0182	0.32029	-0.05231	-0.275	0.0146	0.0116
99	SLO 16	0.0182	0.32029	-0.05231	-0.275	0.0146	0.0116
99	SLD 1	-0.00053	-0.29593	-0.04434	0.254	0.017	-0.0107
99	SLD 2	-0.00053	-0.29593	-0.04434	0.254	0.017	-0.0107
99	SLD 3	-0.00053	0.29595	-0.04434	-0.2541	0.017	0.0107
99	SLD 4	-0.00053	0.29595	-0.04434	-0.2541	0.017	0.0107
99	SLD 5	0.00538	-0.98646	-0.04686	0.8467	0.0163	-0.0358
99	SLD 6	0.00538	-0.98646	-0.04686	0.8467	0.0163	-0.0358
99	SLD 7	0.00538	0.98648	-0.04686	-0.8469	0.0163	0.0357
99	SLD 8	0.00538	0.98648	-0.04686	-0.8469	0.0163	0.0357
99	SLD 9	0.01046	-0.98646	-0.04902	0.8467	0.0156	-0.0358
99	SLD 10	0.01046	-0.98646	-0.04902	0.8467	0.0156	-0.0358
99	SLD 11	0.01046	0.98648	-0.04902	-0.8469	0.0156	0.0357
99	SLD 12	0.01046	0.98648	-0.04902	-0.8469	0.0156	0.0357
99	SLD 13	0.01637	-0.29593	-0.05153	0.254	0.0148	-0.0107
99	SLD 14	0.01637	-0.29593	-0.05153	0.254	0.0148	-0.0107
99	SLD 15	0.01637	0.29595	-0.05153	-0.2541	0.0148	0.0107
99	SLD 16	0.01637	0.29595	-0.05153	-0.2541	0.0148	0.0107
99	SLV 1	-0.0103	-0.78054	-0.04019	0.67	0.0183	-0.0283
99	SLV 2	-0.0103	-0.78054	-0.04019	0.67	0.0183	-0.0283
99	SLV 3	-0.0103	0.78055	-0.04019	-0.6701	0.0183	0.0283
99	SLV 4	-0.0103	0.78055	-0.04019	-0.6701	0.0183	0.0283
99	SLV 5	0.00245	-2.60182	-0.04561	2.2334	0.0166	-0.0943
99	SLV 6	0.00245	-2.60182	-0.04561	2.2334	0.0166	-0.0943
99	SLV 7	0.00245	2.60183	-0.04561	-2.2335	0.0166	0.0943
99	SLV 8	0.00245	2.60183	-0.04561	-2.2335	0.0166	0.0943
99	SLV 9	0.01339	-2.60182	-0.05026	2.2334	0.0152	-0.0943
99	SLV 10	0.01339	-2.60182	-0.05026	2.2334	0.0152	-0.0943
99	SLV 11	0.01339	2.60183	-0.05026	-2.2335	0.0152	0.0943
99	SLV 12	0.01339	2.60183	-0.05026	-2.2335	0.0152	0.0943
99	SLV 13	0.02614	-0.78054	-0.05569	0.67	0.0136	-0.0283
99	SLV 14	0.02614	-0.78054	-0.05569	0.67	0.0136	-0.0283
99	SLV 15	0.02614	0.78055	-0.05569	-0.6701	0.0136	0.0283
99	SLV 16	0.02614	0.78055	-0.05569	-0.6701	0.0136	0.0283
100	SLU 1	-0.00792	0.00001	-0.04794	-0.0001	-0.0159	0
100	SLU 2	-0.03462	0.00001	-0.30616	-0.0001	-0.117	0
100	SLU 3	-0.03462	0.00002	-0.30616	-0.0001	-0.117	0
100	SLU 4	-0.00792	0.00004	-0.04794	-0.0001	-0.0159	0
100	SLU 5	-0.02794	0.00004	-0.2416	-0.0001	-0.0918	0
100	SLU 6	-0.03527	0.00001	-0.30974	-0.0001	-0.118	0
100	SLU 7	-0.03527	0.00002	-0.30974	-0.0001	-0.118	0
100	SLU 8	-0.00857	0.00004	-0.05152	-0.0001	-0.0169	0
100	SLU 9	-0.0286	0.00004	-0.24518	-0.0001	-0.0927	0
100	SLU 10	-0.00923	0.00001	-0.05509	-0.0001	-0.0179	0
100	SLU 11	-0.02925	0.00001	-0.24876	-0.0001	-0.0937	0
100	SLU 12	-0.00923	0.00002	-0.05509	-0.0001	-0.0179	0
100	SLU 13	-0.02925	0.00002	-0.24876	-0.0001	-0.0937	0
100	SLU 14	-0.03539	-0.00013	-0.30903	0	-0.1175	0
100	SLU 15	-0.03539	-0.00012	-0.30903	0	-0.1175	0
100	SLU 16	-0.00869	-0.0001	-0.05081	0	-0.0164	0
100	SLU 17	-0.02871	-0.0001	-0.24448	0	-0.0922	0
100	SLU 18	-0.03604	-0.00013	-0.31261	0	-0.1184	0
100	SLU 19	-0.03604	-0.00012	-0.31261	0	-0.1184	0
100	SLU 20	-0.00934	-0.0001	-0.05439	0	-0.0174	0
100	SLU 21	-0.02937	-0.0001	-0.24806	0	-0.0932	0
100	SLU 22	-0.01	-0.00013	-0.05797	0	-0.0183	0
100	SLU 23	-0.03002	-0.00013	-0.25163	0	-0.0942	0
100	SLU 24	-0.01	-0.00012	-0.05797	0	-0.0183	0
100	SLU 25	-0.03002	-0.00012	-0.25163	0	-0.0942	0
100	SLU 26	-0.00984	-0.00033	-0.05512	0	-0.017	0
100	SLU 27	-0.02987	-0.00033	-0.24879	0	-0.0928	0
100	SLU 28	-0.00984	-0.00032	-0.05512	0	-0.017	0
100	SLU 29	-0.02987	-0.00032	-0.24879	0	-0.0928	0
100	SLU 30	-0.0105	-0.00033	-0.0587	0	-0.018	0
100	SLU 31	-0.03052	-0.00033	-0.25237	0	-0.0938	0
100	SLU 32	-0.0105	-0.00032	-0.0587	0	-0.018	0
100	SLU 33	-0.03052	-0.00032	-0.25237	0	-0.0938	0
100	SLU 34	-0.00792	0.00001	-0.04794	-0.0001	-0.0159	0
100	SLU 35	-0.03462	0.00001	-0.30616	-0.0001	-0.117	0
100	SLU 36	-0.03462	0.00002	-0.30616	-0.0001	-0.117	0
100	SLU 37	-0.00792	0.00004	-0.04794	-0.0001	-0.0159	0
100	SLU 38	-0.02794	0.00004	-0.2416	-0.0001	-0.0918	0
100	SLU 39	-0.03527	0.00001	-0.30974	-0.0001	-0.118	0
100	SLU 40	-0.03527	0.00002	-0.30974	-0.0001	-0.118	0
100	SLU 41	-0.00857	0.00004	-0.05152	-0.0001	-0.0169	0
100	SLU 42	-0.0286	0.00004	-0.24518	-0.0001	-0.0927	0
100	SLU 43	-0.00923	0.00001	-0.05509	-0.0001	-0.0179	0
100	SLU 44	-0.02925	0.00001	-0.24876	-0.0001	-0.0937	0
100	SLU 45	-0.00923	0.00002	-0.05509	-0.0001	-0.0179	0
100	SLU 46	-0.02925	0.00002	-0.24876	-0.0001	-0.0937	0
100	SLU 47	-0.03539	-0.00013	-0.30903	0	-0.1175	0
100	SLU 48	-0.03539	-0.00012	-0.30903	0	-0.1175	0
100	SLU 49	-0.00869	-0.0001	-0.05081	0	-0.0164	0
100	SLU 50	-0.02871	-0.0001	-0.24448	0	-0.0922	0
100	SLU 51	-0.03604	-0.00013	-0.31261	0	-0.1184	0
100	SLU 52	-0.03604	-0.00012	-0.31261	0	-0.1184	0
100	SLU 53	-0.00934	-0.0001	-0.05439	0	-0.0174	0
100	SLU 54	-0.02937	-0.0001	-0.24806	0	-0.0932	0
100	SLU 55	-0.01	-0.00013	-0.05797	0	-0.0183	0

Nodo	Cont.	Spostamento			Rotazione		
Ind.	N.br.	ux	uy	uz	rx	ry	rz
100	SLU 56	-0.03002	-0.00013	-0.25163	0	-0.0942	0
100	SLU 57	-0.01	-0.00012	-0.05797	0	-0.0183	0
100	SLU 58	-0.03002	-0.00012	-0.25163	0	-0.0942	0
100	SLU 59	-0.00984	-0.00033	-0.05512	0	-0.017	0
100	SLU 60	-0.02987	-0.00033	-0.24879	0	-0.0928	0
100	SLU 61	-0.00984	-0.00032	-0.05512	0	-0.017	0
100	SLU 62	-0.02987	-0.00032	-0.24879	0	-0.0928	0
100	SLU 63	-0.0105	-0.00033	-0.0587	0	-0.018	0
100	SLU 64	-0.03052	-0.00033	-0.25237	0	-0.0938	0
100	SLU 65	-0.0105	-0.00032	-0.0587	0	-0.018	0
100	SLU 66	-0.03052	-0.00032	-0.25237	0	-0.0938	0
100	SLU 67	-0.0103	0.00001	-0.06232	-0.0001	-0.0207	0
100	SLU 68	-0.03699	0.00001	-0.32054	-0.0001	-0.1218	0
100	SLU 69	-0.03699	0.00002	-0.32054	-0.0001	-0.1218	0
100	SLU 70	-0.0103	0.00004	-0.06232	-0.0001	-0.0207	0
100	SLU 71	-0.03032	0.00004	-0.25599	-0.0001	-0.0965	0
100	SLU 72	-0.03765	0.00001	-0.32412	-0.0001	-0.1228	0
100	SLU 73	-0.03765	0.00002	-0.32412	-0.0001	-0.1228	0
100	SLU 74	-0.01095	0.00004	-0.0659	-0.0001	-0.0217	0
100	SLU 75	-0.03097	0.00004	-0.25956	-0.0001	-0.0975	0
100	SLU 76	-0.0116	0.00001	-0.06948	-0.0001	-0.0227	0
100	SLU 77	-0.03163	0.00001	-0.26314	-0.0001	-0.0985	0
100	SLU 78	-0.0116	0.00002	-0.06948	-0.0001	-0.0227	0
100	SLU 79	-0.03163	0.00002	-0.26314	-0.0001	-0.0985	0
100	SLU 80	-0.03776	-0.00013	-0.32341	0	-0.1222	0
100	SLU 81	-0.03776	-0.00012	-0.32341	-0.0001	-0.1222	0
100	SLU 82	-0.01107	-0.0001	-0.06519	-0.0001	-0.0212	0
100	SLU 83	-0.03109	-0.0001	-0.25886	-0.0001	-0.097	0
100	SLU 84	-0.03842	-0.00013	-0.32699	-0.0001	-0.1232	0
100	SLU 85	-0.03842	-0.00011	-0.32699	-0.0001	-0.1232	0
100	SLU 86	-0.01172	-0.0001	-0.06877	-0.0001	-0.0221	0
100	SLU 87	-0.03174	-0.0001	-0.26244	-0.0001	-0.098	0
100	SLU 88	-0.01237	-0.00013	-0.07235	-0.0001	-0.0231	0
100	SLU 89	-0.0324	-0.00013	-0.26602	-0.0001	-0.0989	0
100	SLU 90	-0.01237	-0.00011	-0.07235	-0.0001	-0.0231	0
100	SLU 91	-0.0324	-0.00011	-0.26602	-0.0001	-0.0989	0
100	SLU 92	-0.01222	-0.00033	-0.0695	0	-0.0218	0
100	SLU 93	-0.03224	-0.00033	-0.26317	0	-0.0976	0
100	SLU 94	-0.01222	-0.00032	-0.0695	0	-0.0218	0
100	SLU 95	-0.03224	-0.00032	-0.26317	0	-0.0976	0
100	SLU 96	-0.01287	-0.00033	-0.07308	0	-0.0228	0
100	SLU 97	-0.0329	-0.00033	-0.26675	0	-0.0986	0
100	SLU 98	-0.01287	-0.00032	-0.07308	0	-0.0228	0
100	SLU 99	-0.0329	-0.00032	-0.26675	0	-0.0986	0
100	SLU 100	-0.0103	0.00001	-0.06232	-0.0001	-0.0207	0
100	SLU 101	-0.03699	0.00001	-0.32054	-0.0001	-0.1218	0
100	SLU 102	-0.03699	0.00002	-0.32054	-0.0001	-0.1218	0
100	SLU 103	-0.0103	0.00004	-0.06232	-0.0001	-0.0207	0
100	SLU 104	-0.03032	0.00004	-0.25599	-0.0001	-0.0965	0
100	SLU 105	-0.03765	0.00001	-0.32412	-0.0001	-0.1228	0
100	SLU 106	-0.03765	0.00002	-0.32412	-0.0001	-0.1228	0
100	SLU 107	-0.01095	0.00004	-0.0659	-0.0001	-0.0217	0
100	SLU 108	-0.03097	0.00004	-0.25956	-0.0001	-0.0975	0
100	SLU 109	-0.0116	0.00001	-0.06948	-0.0001	-0.0227	0
100	SLU 110	-0.03163	0.00001	-0.26314	-0.0001	-0.0985	0
100	SLU 111	-0.0116	0.00002	-0.06948	-0.0001	-0.0227	0
100	SLU 112	-0.03163	0.00002	-0.26314	-0.0001	-0.0985	0
100	SLU 113	-0.03776	-0.00013	-0.32341	0	-0.1222	0
100	SLU 114	-0.03776	-0.00012	-0.32341	-0.0001	-0.1222	0
100	SLU 115	-0.01107	-0.0001	-0.06519	-0.0001	-0.0212	0
100	SLU 116	-0.03109	-0.0001	-0.25886	-0.0001	-0.097	0
100	SLU 117	-0.03842	-0.00013	-0.32699	-0.0001	-0.1232	0
100	SLU 118	-0.03842	-0.00011	-0.32699	-0.0001	-0.1232	0
100	SLU 119	-0.01172	-0.0001	-0.06877	-0.0001	-0.0221	0
100	SLU 120	-0.03174	-0.0001	-0.26244	-0.0001	-0.098	0
100	SLU 121	-0.01237	-0.00013	-0.07235	-0.0001	-0.0231	0
100	SLU 122	-0.0324	-0.00013	-0.26602	-0.0001	-0.0989	0
100	SLU 123	-0.01237	-0.00011	-0.07235	-0.0001	-0.0231	0
100	SLU 124	-0.0324	-0.00011	-0.26602	-0.0001	-0.0989	0
100	SLU 125	-0.01222	-0.00033	-0.0695	0	-0.0218	0
100	SLU 126	-0.03224	-0.00033	-0.26317	0	-0.0976	0
100	SLU 127	-0.01222	-0.00032	-0.0695	0	-0.0218	0
100	SLU 128	-0.03224	-0.00032	-0.26317	0	-0.0976	0
100	SLU 129	-0.01287	-0.00033	-0.07308	0	-0.0228	0
100	SLU 130	-0.0329	-0.00033	-0.26675	0	-0.0986	0
100	SLU 131	-0.01287	-0.00032	-0.07308	0	-0.0228	0
100	SLU 132	-0.0329	-0.00032	-0.26675	0	-0.0986	0
100	SLE RA 1	-0.00792	0.00001	-0.04794	-0.0001	-0.0159	0
100	SLE RA 2	-0.02572	0.00001	-0.22009	-0.0001	-0.0833	0
100	SLE RA 3	-0.02572	0.00002	-0.22009	-0.0001	-0.0833	0
100	SLE RA 4	-0.00792	0.00003	-0.04794	-0.0001	-0.0159	0
100	SLE RA 5	-0.02127	0.00003	-0.17705	-0.0001	-0.0665	0
100	SLE RA 6	-0.02615	0.00001	-0.22247	-0.0001	-0.084	0
100	SLE RA 7	-0.02615	0.00002	-0.22247	-0.0001	-0.084	0
100	SLE RA 8	-0.00836	0.00003	-0.05032	-0.0001	-0.0166	0
100	SLE RA 9	-0.0217	0.00003	-0.17943	-0.0001	-0.0671	0
100	SLE RA 10	-0.00879	0.00001	-0.05271	-0.0001	-0.0173	0
100	SLE RA 11	-0.02214	0.00001	-0.18182	-0.0001	-0.0678	0
100	SLE RA 12	-0.00879	0.00002	-0.05271	-0.0001	-0.0173	0
100	SLE RA 13	-0.02214	0.00002	-0.18182	-0.0001	-0.0678	0
100	SLE RA 14	-0.02623	-0.00008	-0.222	0	-0.0836	0
100	SLE RA 15	-0.02623	-0.00008	-0.222	0	-0.0836	0
100	SLE RA 16	-0.00843	-0.00006	-0.04985	-0.0001	-0.0162	0
100	SLE RA 17	-0.02178	-0.00006	-0.17896	-0.0001	-0.0668	0
100	SLE RA 18	-0.02667	-0.00008	-0.22439	0	-0.0843	0

Nodo	Cont.	Spostamento			Rotazione		
Ind.	N.br.	ux	uy	uz	rx	ry	rz
100	SLE RA 19	-0.02667	-0.00008	-0.22439	0	-0.0843	0
100	SLE RA 20	-0.00887	-0.00006	-0.05224	-0.0001	-0.0169	0
100	SLE RA 21	-0.02222	-0.00006	-0.18135	-0.0001	-0.0674	0
100	SLE RA 22	-0.0093	-0.00008	-0.05462	-0.0001	-0.0175	0
100	SLE RA 23	-0.02265	-0.00008	-0.18374	0	-0.0681	0
100	SLE RA 24	-0.0093	-0.00008	-0.05462	-0.0001	-0.0175	0
100	SLE RA 25	-0.02265	-0.00008	-0.18374	-0.0001	-0.0681	0
100	SLE RA 26	-0.0092	-0.00022	-0.05273	0	-0.0167	0
100	SLE RA 27	-0.02255	-0.00022	-0.18184	0	-0.0672	0
100	SLE RA 28	-0.0092	-0.00021	-0.05273	0	-0.0167	0
100	SLE RA 29	-0.02255	-0.00021	-0.18184	0	-0.0672	0
100	SLE RA 30	-0.00964	-0.00022	-0.05511	0	-0.0173	0
100	SLE RA 31	-0.02299	-0.00022	-0.18422	0	-0.0679	0
100	SLE RA 32	-0.00964	-0.00021	-0.05511	0	-0.0173	0
100	SLE RA 33	-0.02299	-0.00021	-0.18422	0	-0.0679	0
100	SLE FR 1	-0.00792	0.00001	-0.04794	-0.0001	-0.0159	0
100	SLE FR 2	-0.02127	0.00001	-0.17705	-0.0001	-0.0665	0
100	SLE FR 3	-0.00792	0.00002	-0.04794	-0.0001	-0.0159	0
100	SLE FR 4	-0.00809	0.00001	-0.04889	-0.0001	-0.0162	0
100	SLE FR 5	-0.00843	-0.00008	-0.04985	0	-0.0162	0
100	SLE QP 1	-0.00792	0.00001	-0.04794	-0.0001	-0.0159	0
100	SLO 1	-0.0182	-0.32028	-0.05231	0.2749	-0.0146	0.0116
100	SLO 2	-0.0182	-0.32028	-0.05231	0.2749	-0.0146	0.0116
100	SLO 3	-0.0182	0.32029	-0.05231	-0.275	-0.0146	-0.0116
100	SLO 4	-0.0182	0.32029	-0.05231	-0.275	-0.0146	-0.0116
100	SLO 5	-0.01101	-1.06762	-0.04925	0.9164	-0.0155	0.0387
100	SLO 6	-0.01101	-1.06762	-0.04925	0.9164	-0.0155	0.0387
100	SLO 7	-0.01101	1.06763	-0.04925	-0.9166	-0.0155	-0.0387
100	SLO 8	-0.01101	1.06763	-0.04925	-0.9166	-0.0155	-0.0387
100	SLO 9	-0.00484	-1.06762	-0.04663	0.9164	-0.0163	0.0387
100	SLO 10	-0.00484	-1.06762	-0.04663	0.9164	-0.0163	0.0387
100	SLO 11	-0.00484	1.06763	-0.04663	-0.9166	-0.0163	-0.0387
100	SLO 12	-0.00484	1.06763	-0.04663	-0.9166	-0.0163	-0.0387
100	SLO 13	0.00236	-0.32028	-0.04357	0.2749	-0.0173	0.0116
100	SLO 14	0.00236	-0.32028	-0.04357	0.2749	-0.0173	0.0116
100	SLO 15	0.00236	0.32029	-0.04357	-0.275	-0.0173	-0.0116
100	SLO 16	0.00236	0.32029	-0.04357	-0.275	-0.0173	-0.0116
100	SLD 1	-0.01637	-0.29593	-0.05153	0.254	-0.0148	0.0107
100	SLD 2	-0.01637	-0.29593	-0.05153	0.254	-0.0148	0.0107
100	SLD 3	-0.01637	0.29595	-0.05153	-0.2541	-0.0148	-0.0107
100	SLD 4	-0.01637	0.29595	-0.05153	-0.2541	-0.0148	-0.0107
100	SLD 5	-0.01046	-0.98646	-0.04902	0.8467	-0.0156	0.0358
100	SLD 6	-0.01046	-0.98646	-0.04902	0.8467	-0.0156	0.0358
100	SLD 7	-0.01046	0.98648	-0.04902	-0.8469	-0.0156	-0.0357
100	SLD 8	-0.01046	0.98648	-0.04902	-0.8469	-0.0156	-0.0357
100	SLD 9	-0.00538	-0.98646	-0.04686	0.8467	-0.0163	0.0358
100	SLD 10	-0.00538	-0.98646	-0.04686	0.8467	-0.0163	0.0358
100	SLD 11	-0.00538	0.98648	-0.04686	-0.8469	-0.0163	-0.0357
100	SLD 12	-0.00538	0.98648	-0.04686	-0.8469	-0.0163	-0.0357
100	SLD 13	0.00053	-0.29593	-0.04434	0.254	-0.017	0.0107
100	SLD 14	0.00053	-0.29593	-0.04434	0.254	-0.017	0.0107
100	SLD 15	0.00053	0.29595	-0.04434	-0.2541	-0.017	-0.0107
100	SLD 16	0.00053	0.29595	-0.04434	-0.2541	-0.017	-0.0107
100	SLV 1	-0.02614	-0.78054	-0.05569	0.67	-0.0136	0.0283
100	SLV 2	-0.02614	-0.78054	-0.05569	0.67	-0.0136	0.0283
100	SLV 3	-0.02614	0.78055	-0.05569	-0.6701	-0.0136	-0.0283
100	SLV 4	-0.02614	0.78055	-0.05569	-0.6701	-0.0136	-0.0283
100	SLV 5	-0.01339	-2.60182	-0.05026	2.2334	-0.0152	0.0943
100	SLV 6	-0.01339	-2.60182	-0.05026	2.2334	-0.0152	0.0943
100	SLV 7	-0.01339	2.60183	-0.05026	-2.2335	-0.0152	-0.0943
100	SLV 8	-0.01339	2.60183	-0.05026	-2.2335	-0.0152	-0.0943
100	SLV 9	-0.00245	-2.60182	-0.04561	2.2334	-0.0166	0.0943
100	SLV 10	-0.00245	-2.60182	-0.04561	2.2334	-0.0166	0.0943
100	SLV 11	-0.00245	2.60183	-0.04561	-2.2335	-0.0166	-0.0943
100	SLV 12	-0.00245	2.60183	-0.04561	-2.2335	-0.0166	-0.0943
100	SLV 13	0.0103	-0.78054	-0.04019	0.67	-0.0183	0.0283
100	SLV 14	0.0103	-0.78054	-0.04019	0.67	-0.0183	0.0283
100	SLV 15	0.0103	0.78055	-0.04019	-0.6701	-0.0183	-0.0283
100	SLV 16	0.0103	0.78055	-0.04019	-0.6701	-0.0183	-0.0283
101	SLU 1	0.00792	0	-0.04794	0	0.0159	0
101	SLU 2	0.04428	0	-0.3908	0	0.1477	0
101	SLU 3	0.04428	0.00001	-0.3908	0	0.1477	0
101	SLU 4	0.00792	0.00003	-0.04794	0	0.0159	0
101	SLU 5	0.03519	0.00003	-0.30508	0	0.1148	0
101	SLU 6	0.04462	0	-0.39443	0	0.1489	0
101	SLU 7	0.04462	0.00001	-0.39443	0	0.1489	0
101	SLU 8	0.00826	0.00003	-0.05157	0	0.0171	0
101	SLU 9	0.03553	0.00003	-0.30871	0	0.116	0
101	SLU 10	0.00859	0	-0.0552	0	0.0183	0
101	SLU 11	0.03586	0	-0.31234	0	0.1171	0
101	SLU 12	0.00859	0.00001	-0.0552	0	0.0183	0
101	SLU 13	0.03586	0.00001	-0.31234	0	0.1171	0
101	SLU 14	0.04419	-0.00014	-0.39152	0.0001	0.1479	0
101	SLU 15	0.04419	-0.00013	-0.39152	0.0001	0.1479	0
101	SLU 16	0.00783	-0.00011	-0.04866	0	0.0161	0
101	SLU 17	0.0351	-0.00011	-0.30581	0	0.1149	0
101	SLU 18	0.04453	-0.00014	-0.39515	0.0001	0.1491	0
101	SLU 19	0.04453	-0.00013	-0.39515	0.0001	0.1491	0
101	SLU 20	0.00816	-0.00011	-0.05229	0	0.0173	0
101	SLU 21	0.03544	-0.00011	-0.30944	0	0.1161	0
101	SLU 22	0.0085	-0.00014	-0.05592	0.0001	0.0185	0
101	SLU 23	0.03577	-0.00014	-0.31307	0.0001	0.1173	0
101	SLU 24	0.0085	-0.00013	-0.05592	0.0001	0.0185	0
101	SLU 25	0.03577	-0.00013	-0.31307	0.0001	0.1173	0
101	SLU 26	0.00769	-0.00034	-0.04975	0.0001	0.0163	0

Nodo	Cont.	Spostamento			Rotazione		
Ind.	N.br.	ux	uy	uz	rx	ry	rz
101	SLU 27	0.03496	-0.00034	-0.30689	0.0001	0.1152	0
101	SLU 28	0.00769	-0.00033	-0.04975	0.0001	0.0163	0
101	SLU 29	0.03496	-0.00033	-0.30689	0.0001	0.1152	0
101	SLU 30	0.00802	-0.00034	-0.05338	0.0001	0.0175	0
101	SLU 31	0.0353	-0.00034	-0.31052	0.0001	0.1164	0
101	SLU 32	0.00802	-0.00033	-0.05338	0.0001	0.0175	0
101	SLU 33	0.0353	-0.00033	-0.31052	0.0001	0.1164	0
101	SLU 34	0.00792	0	-0.04794	0	0.0159	0
101	SLU 35	0.04428	0	-0.3908	0	0.1477	0
101	SLU 36	0.04428	0.00001	-0.3908	0	0.1477	0
101	SLU 37	0.00792	0.00003	-0.04794	0	0.0159	0
101	SLU 38	0.03519	0.00003	-0.30508	0	0.1148	0
101	SLU 39	0.04462	0	-0.39443	0	0.1489	0
101	SLU 40	0.04462	0.00001	-0.39443	0	0.1489	0
101	SLU 41	0.00826	0.00003	-0.05157	0	0.0171	0
101	SLU 42	0.03553	0.00003	-0.30871	0	0.116	0
101	SLU 43	0.00859	0	-0.0552	0	0.0183	0
101	SLU 44	0.03586	0	-0.31234	0	0.1171	0
101	SLU 45	0.00859	0.00001	-0.0552	0	0.0183	0
101	SLU 46	0.03586	0.00001	-0.31234	0	0.1171	0
101	SLU 47	0.04419	-0.00014	-0.39152	0.0001	0.1479	0
101	SLU 48	0.04419	-0.00013	-0.39152	0.0001	0.1479	0
101	SLU 49	0.00783	-0.00011	-0.04866	0	0.0161	0
101	SLU 50	0.0351	-0.00011	-0.30581	0	0.1149	0
101	SLU 51	0.04453	-0.00014	-0.39515	0.0001	0.1491	0
101	SLU 52	0.04453	-0.00013	-0.39515	0.0001	0.1491	0
101	SLU 53	0.00816	-0.00011	-0.05229	0	0.0173	0
101	SLU 54	0.03544	-0.00011	-0.30944	0	0.1161	0
101	SLU 55	0.0085	-0.00014	-0.05592	0.0001	0.0185	0
101	SLU 56	0.03577	-0.00014	-0.31307	0.0001	0.1173	0
101	SLU 57	0.0085	-0.00013	-0.05592	0.0001	0.0185	0
101	SLU 58	0.03577	-0.00013	-0.31307	0.0001	0.1173	0
101	SLU 59	0.00769	-0.00034	-0.04975	0.0001	0.0163	0
101	SLU 60	0.03496	-0.00034	-0.30689	0.0001	0.1152	0
101	SLU 61	0.00769	-0.00033	-0.04975	0.0001	0.0163	0
101	SLU 62	0.03496	-0.00033	-0.30689	0.0001	0.1152	0
101	SLU 63	0.00802	-0.00034	-0.05338	0.0001	0.0175	0
101	SLU 64	0.0353	-0.00034	-0.31052	0.0001	0.1164	0
101	SLU 65	0.00802	-0.00033	-0.05338	0.0001	0.0175	0
101	SLU 66	0.0353	-0.00033	-0.31052	0.0001	0.1164	0
101	SLU 67	0.0103	0	-0.06232	0	0.0207	0
101	SLU 68	0.04666	0	-0.40518	0	0.1525	0
101	SLU 69	0.04666	0.00001	-0.40518	0	0.1525	0
101	SLU 70	0.0103	0.00003	-0.06232	0	0.0207	0
101	SLU 71	0.03757	0.00003	-0.31947	0	0.1196	0
101	SLU 72	0.047	0	-0.40881	0	0.1537	0
101	SLU 73	0.047	0.00001	-0.40881	0	0.1537	0
101	SLU 74	0.01063	0.00003	-0.06595	0	0.0219	0
101	SLU 75	0.0379	0.00003	-0.3231	0	0.1207	0
101	SLU 76	0.01097	0	-0.06958	0	0.0231	0
101	SLU 77	0.03824	0	-0.32672	0	0.1219	0
101	SLU 78	0.01097	0.00001	-0.06958	0	0.0231	0
101	SLU 79	0.03824	0.00001	-0.32672	0	0.1219	0
101	SLU 80	0.04657	-0.00014	-0.40591	0.0001	0.1527	0
101	SLU 81	0.04657	-0.00013	-0.40591	0.0001	0.1527	0
101	SLU 82	0.0102	-0.00011	-0.06304	0	0.0209	0
101	SLU 83	0.03748	-0.00011	-0.32019	0	0.1197	0
101	SLU 84	0.0469	-0.00014	-0.40953	0.0001	0.1539	0
101	SLU 85	0.0469	-0.00013	-0.40953	0.0001	0.1539	0
101	SLU 86	0.01054	-0.00011	-0.06667	0	0.0221	0
101	SLU 87	0.03781	-0.00011	-0.32382	0	0.1209	0
101	SLU 88	0.01087	-0.00014	-0.0703	0.0001	0.0233	0
101	SLU 89	0.03815	-0.00014	-0.32745	0.0001	0.1221	0
101	SLU 90	0.01087	-0.00013	-0.0703	0.0001	0.0233	0
101	SLU 91	0.03815	-0.00013	-0.32745	0.0001	0.1221	0
101	SLU 92	0.01006	-0.00034	-0.06413	0.0001	0.0211	0
101	SLU 93	0.03734	-0.00034	-0.32128	0.0001	0.12	0
101	SLU 94	0.01006	-0.00033	-0.06413	0.0001	0.0211	0
101	SLU 95	0.03734	-0.00033	-0.32128	0.0001	0.12	0
101	SLU 96	0.0104	-0.00034	-0.06776	0.0001	0.0223	0
101	SLU 97	0.03767	-0.00034	-0.3249	0.0001	0.1212	0
101	SLU 98	0.0104	-0.00033	-0.06776	0.0001	0.0223	0
101	SLU 99	0.03767	-0.00033	-0.3249	0.0001	0.1212	0
101	SLU 100	0.0103	0	-0.06232	0	0.0207	0
101	SLU 101	0.04666	0	-0.40518	0	0.1525	0
101	SLU 102	0.04666	0.00001	-0.40518	0	0.1525	0
101	SLU 103	0.0103	0.00003	-0.06232	0	0.0207	0
101	SLU 104	0.03757	0.00003	-0.31947	0	0.1196	0
101	SLU 105	0.047	0	-0.40881	0	0.1537	0
101	SLU 106	0.047	0.00001	-0.40881	0	0.1537	0
101	SLU 107	0.01063	0.00003	-0.06595	0	0.0219	0
101	SLU 108	0.0379	0.00003	-0.3231	0	0.1207	0
101	SLU 109	0.01097	0	-0.06958	0	0.0231	0
101	SLU 110	0.03824	0	-0.32672	0	0.1219	0
101	SLU 111	0.01097	0.00001	-0.06958	0	0.0231	0
101	SLU 112	0.03824	0.00001	-0.32672	0	0.1219	0
101	SLU 113	0.04657	-0.00014	-0.40591	0.0001	0.1527	0
101	SLU 114	0.04657	-0.00013	-0.40591	0.0001	0.1527	0
101	SLU 115	0.0102	-0.00011	-0.06304	0	0.0209	0
101	SLU 116	0.03748	-0.00011	-0.32019	0	0.1197	0
101	SLU 117	0.0469	-0.00014	-0.40953	0.0001	0.1539	0
101	SLU 118	0.0469	-0.00013	-0.40953	0.0001	0.1539	0
101	SLU 119	0.01054	-0.00011	-0.06667	0	0.0221	0
101	SLU 120	0.03781	-0.00011	-0.32382	0	0.1209	0
101	SLU 121	0.01087	-0.00014	-0.0703	0.0001	0.0233	0

Nodo	Cont.	Spostamento			Rotazione		
Ind.	N.br.	ux	uy	uz	rx	ry	rz
101	SLU 122	0.03815	-0.00014	-0.32745	0.0001	0.1221	0
101	SLU 123	0.01087	-0.00013	-0.0703	0.0001	0.0233	0
101	SLU 124	0.03815	-0.00013	-0.32745	0.0001	0.1221	0
101	SLU 125	0.01006	-0.00034	-0.06413	0.0001	0.0211	0
101	SLU 126	0.03734	-0.00034	-0.32128	0.0001	0.12	0
101	SLU 127	0.01006	-0.00033	-0.06413	0.0001	0.0211	0
101	SLU 128	0.03734	-0.00033	-0.32128	0.0001	0.12	0
101	SLU 129	0.0104	-0.00034	-0.06776	0.0001	0.0223	0
101	SLU 130	0.03767	-0.00034	-0.3249	0.0001	0.1212	0
101	SLU 131	0.0104	-0.00033	-0.06776	0.0001	0.0223	0
101	SLU 132	0.03767	-0.00033	-0.3249	0.0001	0.1212	0
101	SLE RA 1	0.00792	0	-0.04794	0	0.0159	0
101	SLE RA 2	0.03216	0	-0.27651	0	0.1038	0
101	SLE RA 3	0.03216	0.00001	-0.27651	0	0.1038	0
101	SLE RA 4	0.00792	0.00002	-0.04794	0	0.0159	0
101	SLE RA 5	0.0261	0.00002	-0.21937	0	0.0818	0
101	SLE RA 6	0.03239	0	-0.27893	0	0.1046	0
101	SLE RA 7	0.03239	0.00001	-0.27893	0	0.1046	0
101	SLE RA 8	0.00814	0.00002	-0.05036	0	0.0167	0
101	SLE RA 9	0.02633	0.00002	-0.22179	0	0.0826	0
101	SLE RA 10	0.00837	0	-0.05278	0	0.0175	0
101	SLE RA 11	0.02655	0	-0.22421	0	0.0834	0
101	SLE RA 12	0.00837	0.00001	-0.05278	0	0.0175	0
101	SLE RA 13	0.02655	0.00001	-0.22421	0	0.0834	0
101	SLE RA 14	0.0321	-0.00009	-0.277	0	0.1039	0
101	SLE RA 15	0.0321	-0.00008	-0.277	0	0.1039	0
101	SLE RA 16	0.00786	-0.00007	-0.04842	0	0.0161	0
101	SLE RA 17	0.02604	-0.00007	-0.21985	0	0.0819	0
101	SLE RA 18	0.03232	-0.00009	-0.27941	0	0.1047	0
101	SLE RA 19	0.03232	-0.00008	-0.27941	0	0.1047	0
101	SLE RA 20	0.00808	-0.00007	-0.05084	0	0.0168	0
101	SLE RA 21	0.02626	-0.00007	-0.22227	0	0.0827	0
101	SLE RA 22	0.00831	-0.00009	-0.05326	0	0.0176	0
101	SLE RA 23	0.02649	-0.00009	-0.22469	0	0.0835	0
101	SLE RA 24	0.00831	-0.00008	-0.05326	0	0.0176	0
101	SLE RA 25	0.02649	-0.00008	-0.22469	0	0.0835	0
101	SLE RA 26	0.00776	-0.00023	-0.04914	0.0001	0.0162	0
101	SLE RA 27	0.02595	-0.00023	-0.22058	0.0001	0.0821	0
101	SLE RA 28	0.00776	-0.00022	-0.04914	0.0001	0.0162	0
101	SLE RA 29	0.02595	-0.00022	-0.22058	0.0001	0.0821	0
101	SLE RA 30	0.00799	-0.00023	-0.05156	0.0001	0.017	0
101	SLE RA 31	0.02617	-0.00023	-0.22299	0.0001	0.0829	0
101	SLE RA 32	0.00799	-0.00022	-0.05156	0.0001	0.017	0
101	SLE RA 33	0.02617	-0.00022	-0.22299	0.0001	0.0829	0
101	SLE FR 1	0.00792	0	-0.04794	0	0.0159	0
101	SLE FR 2	0.0261	0	-0.21937	0	0.0818	0
101	SLE FR 3	0.00792	0.00001	-0.04794	0	0.0159	0
101	SLE FR 4	0.00801	0	-0.04891	0	0.0163	0
101	SLE FR 5	0.00786	-0.00009	-0.04842	0	0.0161	0
101	SLE QP 1	0.00792	0	-0.04794	0	0.0159	0
101	SLO 1	-0.00236	-0.32029	-0.04357	0.275	0.0173	-0.0116
101	SLO 2	-0.00236	-0.32029	-0.04357	0.275	0.0173	-0.0116
101	SLO 3	-0.00236	0.32029	-0.04357	-0.275	0.0173	0.0116
101	SLO 4	-0.00236	0.32029	-0.04357	-0.275	0.0173	0.0116
101	SLO 5	0.00484	-1.06764	-0.04663	0.9167	0.0163	-0.0386
101	SLO 6	0.00484	-1.06764	-0.04663	0.9167	0.0163	-0.0386
101	SLO 7	0.00484	1.06764	-0.04663	-0.9167	0.0163	0.0386
101	SLO 8	0.00484	1.06764	-0.04663	-0.9167	0.0163	0.0386
101	SLO 9	0.01101	-1.06764	-0.04925	0.9167	0.0155	-0.0386
101	SLO 10	0.01101	-1.06764	-0.04925	0.9167	0.0155	-0.0386
101	SLO 11	0.01101	1.06764	-0.04925	-0.9167	0.0155	0.0386
101	SLO 12	0.01101	1.06764	-0.04925	-0.9167	0.0155	0.0386
101	SLO 13	0.0182	-0.32029	-0.05231	0.275	0.0146	-0.0116
101	SLO 14	0.0182	-0.32029	-0.05231	0.275	0.0146	-0.0116
101	SLO 15	0.0182	0.32029	-0.05231	-0.275	0.0146	0.0116
101	SLO 16	0.0182	0.32029	-0.05231	-0.275	0.0146	0.0116
101	SLD 1	-0.00053	-0.29595	-0.04434	0.2541	0.017	-0.0107
101	SLD 2	-0.00053	-0.29595	-0.04434	0.2541	0.017	-0.0107
101	SLD 3	-0.00053	0.29595	-0.04434	-0.2541	0.017	0.0107
101	SLD 4	-0.00053	0.29595	-0.04434	-0.2541	0.017	0.0107
101	SLD 5	0.00538	-0.98649	-0.04686	0.847	0.0163	-0.0357
101	SLD 6	0.00538	-0.98649	-0.04686	0.847	0.0163	-0.0357
101	SLD 7	0.00538	0.98649	-0.04686	-0.847	0.0163	0.0357
101	SLD 8	0.00538	0.98649	-0.04686	-0.847	0.0163	0.0357
101	SLD 9	0.01046	-0.98649	-0.04902	0.847	0.0156	-0.0357
101	SLD 10	0.01046	-0.98649	-0.04902	0.847	0.0156	-0.0357
101	SLD 11	0.01046	0.98649	-0.04902	-0.847	0.0156	0.0357
101	SLD 12	0.01046	0.98649	-0.04902	-0.847	0.0156	0.0357
101	SLD 13	0.01637	-0.29595	-0.05153	0.2541	0.0148	-0.0107
101	SLD 14	0.01637	-0.29595	-0.05153	0.2541	0.0148	-0.0107
101	SLD 15	0.01637	0.29595	-0.05153	-0.2541	0.0148	0.0107
101	SLD 16	0.01637	0.29595	-0.05153	-0.2541	0.0148	0.0107
101	SLV 1	-0.0103	-0.78056	-0.04019	0.6702	0.0183	-0.0282
101	SLV 2	-0.0103	-0.78056	-0.04019	0.6702	0.0183	-0.0282
101	SLV 3	-0.0103	0.78056	-0.04019	-0.6702	0.0183	0.0282
101	SLV 4	-0.0103	0.78056	-0.04019	-0.6702	0.0183	0.0282
101	SLV 5	0.00245	-2.60187	-0.04561	2.2339	0.0166	-0.0942
101	SLV 6	0.00245	-2.60187	-0.04561	2.2339	0.0166	-0.0942
101	SLV 7	0.00245	2.60187	-0.04561	-2.2339	0.0166	0.0942
101	SLV 8	0.00245	2.60187	-0.04561	-2.2339	0.0166	0.0942
101	SLV 9	0.01339	-2.60187	-0.05026	2.2339	0.0152	-0.0942
101	SLV 10	0.01339	-2.60187	-0.05026	2.2339	0.0152	-0.0942
101	SLV 11	0.01339	2.60187	-0.05026	-2.2339	0.0152	0.0942
101	SLV 12	0.01339	2.60187	-0.05026	-2.2339	0.0152	0.0942
101	SLV 13	0.02614	-0.78056	-0.05569	0.6702	0.0136	-0.0282

Nodo	Cont.	Spostamento			Rotazione		
Ind.	N.br.	ux	uy	uz	rx	ry	rz
101	SLV 14	0.02614	-0.78056	-0.05569	0.6702	0.0136	-0.0282
101	SLV 15	0.02614	0.78056	-0.05569	-0.6702	0.0136	0.0282
101	SLV 16	0.02614	0.78056	-0.05569	-0.6702	0.0136	0.0282
102	SLU 1	-0.00792	0	-0.04794	0	-0.0159	0
102	SLU 2	-0.04428	0	-0.3908	0	-0.1477	0
102	SLU 3	-0.04428	0.00001	-0.3908	0	-0.1477	0
102	SLU 4	-0.00792	0.00003	-0.04794	0	-0.0159	0
102	SLU 5	-0.03519	0.00003	-0.30508	0	-0.1148	0
102	SLU 6	-0.04503	0	-0.3953	0	-0.1491	0
102	SLU 7	-0.04503	0.00001	-0.3953	0	-0.1491	0
102	SLU 8	-0.00867	0.00003	-0.05244	0	-0.0173	0
102	SLU 9	-0.03594	0.00003	-0.30959	0	-0.1161	0
102	SLU 10	-0.00942	0	-0.05695	0	-0.0186	0
102	SLU 11	-0.03669	0	-0.31409	0	-0.1175	0
102	SLU 12	-0.00942	0.00001	-0.05695	0	-0.0186	0
102	SLU 13	-0.03669	0.00001	-0.31409	0	-0.1175	0
102	SLU 14	-0.04488	-0.00014	-0.39298	0.0001	-0.1482	0
102	SLU 15	-0.04488	-0.00013	-0.39298	0.0001	-0.1482	0
102	SLU 16	-0.00852	-0.00011	-0.05012	0	-0.0164	0
102	SLU 17	-0.03579	-0.00011	-0.30727	0	-0.1152	0
102	SLU 18	-0.04563	-0.00014	-0.39749	0.0001	-0.1495	0
102	SLU 19	-0.04563	-0.00013	-0.39749	0.0001	-0.1495	0
102	SLU 20	-0.00927	-0.00011	-0.05462	0	-0.0177	0
102	SLU 21	-0.03654	-0.00011	-0.31177	0	-0.1166	0
102	SLU 22	-0.01002	-0.00014	-0.05913	0.0001	-0.0191	0
102	SLU 23	-0.03729	-0.00014	-0.31628	0.0001	-0.1179	0
102	SLU 24	-0.01002	-0.00013	-0.05913	0.0001	-0.0191	0
102	SLU 25	-0.03729	-0.00013	-0.31628	0.0001	-0.1179	0
102	SLU 26	-0.00941	-0.00034	-0.05339	0.0001	-0.017	0
102	SLU 27	-0.03669	-0.00034	-0.31054	0.0001	-0.1159	0
102	SLU 28	-0.00941	-0.00033	-0.05339	0.0001	-0.017	0
102	SLU 29	-0.03669	-0.00033	-0.31054	0.0001	-0.1159	0
102	SLU 30	-0.01016	-0.00034	-0.0579	0.0001	-0.0184	0
102	SLU 31	-0.03743	-0.00034	-0.31504	0.0001	-0.1172	0
102	SLU 32	-0.01016	-0.00033	-0.0579	0.0001	-0.0184	0
102	SLU 33	-0.03743	-0.00033	-0.31504	0.0001	-0.1172	0
102	SLU 34	-0.00792	0	-0.04794	0	-0.0159	0
102	SLU 35	-0.04428	0	-0.3908	0	-0.1477	0
102	SLU 36	-0.04428	0.00001	-0.3908	0	-0.1477	0
102	SLU 37	-0.00792	0.00003	-0.04794	0	-0.0159	0
102	SLU 38	-0.03519	0.00003	-0.30508	0	-0.1148	0
102	SLU 39	-0.04503	0	-0.3953	0	-0.1491	0
102	SLU 40	-0.04503	0.00001	-0.3953	0	-0.1491	0
102	SLU 41	-0.00867	0.00003	-0.05244	0	-0.0173	0
102	SLU 42	-0.03594	0.00003	-0.30959	0	-0.1161	0
102	SLU 43	-0.00942	0	-0.05695	0	-0.0186	0
102	SLU 44	-0.03669	0	-0.31409	0	-0.1175	0
102	SLU 45	-0.00942	0.00001	-0.05695	0	-0.0186	0
102	SLU 46	-0.03669	0.00001	-0.31409	0	-0.1175	0
102	SLU 47	-0.04488	-0.00014	-0.39298	0.0001	-0.1482	0
102	SLU 48	-0.04488	-0.00013	-0.39298	0.0001	-0.1482	0
102	SLU 49	-0.00852	-0.00011	-0.05012	0	-0.0164	0
102	SLU 50	-0.03579	-0.00011	-0.30727	0	-0.1152	0
102	SLU 51	-0.04563	-0.00014	-0.39749	0.0001	-0.1495	0
102	SLU 52	-0.04563	-0.00013	-0.39749	0.0001	-0.1495	0
102	SLU 53	-0.00927	-0.00011	-0.05462	0	-0.0177	0
102	SLU 54	-0.03654	-0.00011	-0.31177	0	-0.1166	0
102	SLU 55	-0.01002	-0.00014	-0.05913	0.0001	-0.0191	0
102	SLU 56	-0.03729	-0.00014	-0.31628	0.0001	-0.1179	0
102	SLU 57	-0.01002	-0.00013	-0.05913	0.0001	-0.0191	0
102	SLU 58	-0.03729	-0.00013	-0.31628	0.0001	-0.1179	0
102	SLU 59	-0.00941	-0.00034	-0.05339	0.0001	-0.017	0
102	SLU 60	-0.03669	-0.00034	-0.31054	0.0001	-0.1159	0
102	SLU 61	-0.00941	-0.00033	-0.05339	0.0001	-0.017	0
102	SLU 62	-0.03669	-0.00033	-0.31054	0.0001	-0.1159	0
102	SLU 63	-0.01016	-0.00034	-0.0579	0.0001	-0.0184	0
102	SLU 64	-0.03743	-0.00034	-0.31504	0.0001	-0.1172	0
102	SLU 65	-0.01016	-0.00033	-0.0579	0.0001	-0.0184	0
102	SLU 66	-0.03743	-0.00033	-0.31504	0.0001	-0.1172	0
102	SLU 67	-0.0103	0	-0.06232	0	-0.0207	0
102	SLU 68	-0.04666	0	-0.40518	0	-0.1525	0
102	SLU 69	-0.04666	0.00001	-0.40518	0	-0.1525	0
102	SLU 70	-0.0103	0.00003	-0.06232	0	-0.0207	0
102	SLU 71	-0.03757	0.00003	-0.31947	0	-0.1196	0
102	SLU 72	-0.04741	0	-0.40969	0	-0.1539	0
102	SLU 73	-0.04741	0.00001	-0.40969	0	-0.1539	0
102	SLU 74	-0.01105	0.00003	-0.06682	0	-0.0221	0
102	SLU 75	-0.03832	0.00003	-0.32397	0	-0.1209	0
102	SLU 76	-0.01179	0	-0.07133	0	-0.0234	0
102	SLU 77	-0.03907	0	-0.32847	0	-0.1223	0
102	SLU 78	-0.01179	0.00001	-0.07133	0	-0.0234	0
102	SLU 79	-0.03907	0.00001	-0.32847	0	-0.1223	0
102	SLU 80	-0.04726	-0.00014	-0.40736	0.0001	-0.1529	0
102	SLU 81	-0.04726	-0.00013	-0.40736	0.0001	-0.1529	0
102	SLU 82	-0.01089	-0.00011	-0.0645	0	-0.0212	0
102	SLU 83	-0.03817	-0.00011	-0.32165	0	-0.12	0
102	SLU 84	-0.04801	-0.00014	-0.41187	0.0001	-0.1543	0
102	SLU 85	-0.04801	-0.00013	-0.41187	0.0001	-0.1543	0
102	SLU 86	-0.01164	-0.00011	-0.06901	0	-0.0225	0
102	SLU 87	-0.03892	-0.00011	-0.32615	0	-0.1213	0
102	SLU 88	-0.01239	-0.00014	-0.07351	0.0001	-0.0239	0
102	SLU 89	-0.03966	-0.00014	-0.33066	0.0001	-0.1227	0
102	SLU 90	-0.01239	-0.00013	-0.07351	0.0001	-0.0239	0
102	SLU 91	-0.03966	-0.00013	-0.33066	0.0001	-0.1227	0
102	SLU 92	-0.01179	-0.00034	-0.06778	0.0001	-0.0218	0

Nodo	Cont.	Spostamento			Rotazione		
Ind.	N.br.	ux	uy	uz	rx	ry	rz
102	SLU 93	-0.03906	-0.00034	-0.32492	0.0001	-0.1206	0
102	SLU 94	-0.01179	-0.00033	-0.06778	0.0001	-0.0218	0
102	SLU 95	-0.03906	-0.00033	-0.32492	0.0001	-0.1206	0
102	SLU 96	-0.01254	-0.00034	-0.07228	0.0001	-0.0232	0
102	SLU 97	-0.03981	-0.00034	-0.32943	0.0001	-0.122	0
102	SLU 98	-0.01254	-0.00033	-0.07228	0.0001	-0.0232	0
102	SLU 99	-0.03981	-0.00033	-0.32943	0.0001	-0.122	0
102	SLU 100	-0.0103	0	-0.06232	0	-0.0207	0
102	SLU 101	-0.04666	0	-0.40518	0	-0.1525	0
102	SLU 102	-0.04666	0.00001	-0.40518	0	-0.1525	0
102	SLU 103	-0.0103	0.00003	-0.06232	0	-0.0207	0
102	SLU 104	-0.03757	0.00003	-0.31947	0	-0.1196	0
102	SLU 105	-0.04741	0	-0.40969	0	-0.1539	0
102	SLU 106	-0.04741	0.00001	-0.40969	0	-0.1539	0
102	SLU 107	-0.01105	0.00003	-0.06682	0	-0.0221	0
102	SLU 108	-0.03832	0.00003	-0.32397	0	-0.1209	0
102	SLU 109	-0.01179	0	-0.07133	0	-0.0234	0
102	SLU 110	-0.03907	0	-0.32847	0	-0.1223	0
102	SLU 111	-0.01179	0.00001	-0.07133	0	-0.0234	0
102	SLU 112	-0.03907	0.00001	-0.32847	0	-0.1223	0
102	SLU 113	-0.04726	-0.00014	-0.40736	0.0001	-0.1529	0
102	SLU 114	-0.04726	-0.00013	-0.40736	0.0001	-0.1529	0
102	SLU 115	-0.01089	-0.00011	-0.0645	0	-0.0212	0
102	SLU 116	-0.03817	-0.00011	-0.32165	0	-0.12	0
102	SLU 117	-0.04801	-0.00014	-0.41187	0.0001	-0.1543	0
102	SLU 118	-0.04801	-0.00013	-0.41187	0.0001	-0.1543	0
102	SLU 119	-0.01164	-0.00011	-0.06901	0	-0.0225	0
102	SLU 120	-0.03892	-0.00011	-0.32615	0	-0.1213	0
102	SLU 121	-0.01239	-0.00014	-0.07351	0.0001	-0.0239	0
102	SLU 122	-0.03966	-0.00014	-0.33066	0.0001	-0.1227	0
102	SLU 123	-0.01239	-0.00013	-0.07351	0.0001	-0.0239	0
102	SLU 124	-0.03966	-0.00013	-0.33066	0.0001	-0.1227	0
102	SLU 125	-0.01179	-0.00034	-0.06778	0.0001	-0.0218	0
102	SLU 126	-0.03906	-0.00034	-0.32492	0.0001	-0.1206	0
102	SLU 127	-0.01179	-0.00033	-0.06778	0.0001	-0.0218	0
102	SLU 128	-0.03906	-0.00033	-0.32492	0.0001	-0.1206	0
102	SLU 129	-0.01254	-0.00034	-0.07228	0.0001	-0.0232	0
102	SLU 130	-0.03981	-0.00034	-0.32943	0.0001	-0.122	0
102	SLU 131	-0.01254	-0.00033	-0.07228	0.0001	-0.0232	0
102	SLU 132	-0.03981	-0.00033	-0.32943	0.0001	-0.122	0
102	SLE RA 1	-0.00792	0	-0.04794	0	-0.0159	0
102	SLE RA 2	-0.03216	0	-0.27651	0	-0.1038	0
102	SLE RA 3	-0.03216	0.00001	-0.27651	0	-0.1038	0
102	SLE RA 4	-0.00792	0.00002	-0.04794	0	-0.0159	0
102	SLE RA 5	-0.0261	0.00002	-0.21937	0	-0.0818	0
102	SLE RA 6	-0.03266	0	-0.27952	0	-0.1047	0
102	SLE RA 7	-0.03266	0.00001	-0.27952	0	-0.1047	0
102	SLE RA 8	-0.00842	0.00002	-0.05094	0	-0.0168	0
102	SLE RA 9	-0.0266	0.00002	-0.22237	0	-0.0827	0
102	SLE RA 10	-0.00892	0	-0.05394	0	-0.0177	0
102	SLE RA 11	-0.0271	0	-0.22537	0	-0.0836	0
102	SLE RA 12	-0.00892	0.00001	-0.05394	0	-0.0177	0
102	SLE RA 13	-0.0271	0.00001	-0.22537	0	-0.0836	0
102	SLE RA 14	-0.03256	-0.00009	-0.27797	0	-0.1041	0
102	SLE RA 15	-0.03256	-0.00008	-0.27797	0	-0.1041	0
102	SLE RA 16	-0.00832	-0.00007	-0.04939	0	-0.0162	0
102	SLE RA 17	-0.0265	-0.00007	-0.22082	0	-0.0821	0
102	SLE RA 18	-0.03306	-0.00009	-0.28097	0	-0.105	0
102	SLE RA 19	-0.03306	-0.00008	-0.28097	0	-0.105	0
102	SLE RA 20	-0.00882	-0.00007	-0.0524	0	-0.0171	0
102	SLE RA 21	-0.027	-0.00007	-0.22383	0	-0.083	0
102	SLE RA 22	-0.00932	-0.00009	-0.0554	0	-0.018	0
102	SLE RA 23	-0.0275	-0.00009	-0.22683	0	-0.0839	0
102	SLE RA 24	-0.00932	-0.00008	-0.0554	0	-0.018	0
102	SLE RA 25	-0.0275	-0.00008	-0.22683	0	-0.0839	0
102	SLE RA 26	-0.00891	-0.00023	-0.05158	0.0001	-0.0167	0
102	SLE RA 27	-0.0271	-0.00023	-0.22301	0.0001	-0.0826	0
102	SLE RA 28	-0.00891	-0.00022	-0.05158	0.0001	-0.0167	0
102	SLE RA 29	-0.0271	-0.00022	-0.22301	0.0001	-0.0826	0
102	SLE RA 30	-0.00941	-0.00023	-0.05458	0.0001	-0.0176	0
102	SLE RA 31	-0.0276	-0.00023	-0.22601	0.0001	-0.0835	0
102	SLE RA 32	-0.00941	-0.00022	-0.05458	0.0001	-0.0176	0
102	SLE RA 33	-0.0276	-0.00022	-0.22601	0.0001	-0.0835	0
102	SLE FR 1	-0.00792	0	-0.04794	0	-0.0159	0
102	SLE FR 2	-0.0261	0	-0.21937	0	-0.0818	0
102	SLE FR 3	-0.00792	0.00001	-0.04794	0	-0.0159	0
102	SLE FR 4	-0.00812	0	-0.04914	0	-0.0163	0
102	SLE FR 5	-0.00832	-0.00009	-0.04939	0	-0.0162	0
102	SLE QP 1	-0.00792	0	-0.04794	0	-0.0159	0
102	SLO 1	-0.0182	-0.32029	-0.05231	0.275	-0.0146	0.0116
102	SLO 2	-0.0182	-0.32029	-0.05231	0.275	-0.0146	0.0116
102	SLO 3	-0.0182	0.32029	-0.05231	-0.275	-0.0146	-0.0116
102	SLO 4	-0.0182	0.32029	-0.05231	-0.275	-0.0146	-0.0116
102	SLO 5	-0.01101	-1.06764	-0.04925	0.9167	-0.0155	0.0386
102	SLO 6	-0.01101	-1.06764	-0.04925	0.9167	-0.0155	0.0386
102	SLO 7	-0.01101	1.06764	-0.04925	-0.9167	-0.0155	-0.0386
102	SLO 8	-0.01101	1.06764	-0.04925	-0.9167	-0.0155	-0.0386
102	SLO 9	-0.00484	-1.06764	-0.04663	0.9167	-0.0163	0.0386
102	SLO 10	-0.00484	-1.06764	-0.04663	0.9167	-0.0163	0.0386
102	SLO 11	-0.00484	1.06764	-0.04663	-0.9167	-0.0163	-0.0386
102	SLO 12	-0.00484	1.06764	-0.04663	-0.9167	-0.0163	-0.0386
102	SLO 13	0.00236	-0.32029	-0.04357	0.275	-0.0173	0.0116
102	SLO 14	0.00236	-0.32029	-0.04357	0.275	-0.0173	0.0116
102	SLO 15	0.00236	0.32029	-0.04357	-0.275	-0.0173	-0.0116
102	SLO 16	0.00236	0.32029	-0.04357	-0.275	-0.0173	-0.0116

Nodo	Cont.	Spostamento			Rotazione		
Ind.	N.br.	ux	uy	uz	rx	ry	rz
102	SLD 1	-0.01637	-0.29595	-0.05153	0.2541	-0.0148	0.0107
102	SLD 2	-0.01637	-0.29595	-0.05153	0.2541	-0.0148	0.0107
102	SLD 3	-0.01637	0.29595	-0.05153	-0.2541	-0.0148	-0.0107
102	SLD 4	-0.01637	0.29595	-0.05153	-0.2541	-0.0148	-0.0107
102	SLD 5	-0.01046	-0.98649	-0.04902	0.847	-0.0156	0.0357
102	SLD 6	-0.01046	-0.98649	-0.04902	0.847	-0.0156	0.0357
102	SLD 7	-0.01046	0.98649	-0.04902	-0.847	-0.0156	-0.0357
102	SLD 8	-0.01046	0.98649	-0.04902	-0.847	-0.0156	-0.0357
102	SLD 9	-0.00538	-0.98649	-0.04686	0.847	-0.0163	0.0357
102	SLD 10	-0.00538	-0.98649	-0.04686	0.847	-0.0163	0.0357
102	SLD 11	-0.00538	0.98649	-0.04686	-0.847	-0.0163	-0.0357
102	SLD 12	-0.00538	0.98649	-0.04686	-0.847	-0.0163	-0.0357
102	SLD 13	0.00053	-0.29595	-0.04434	0.2541	-0.017	0.0107
102	SLD 14	0.00053	-0.29595	-0.04434	0.2541	-0.017	0.0107
102	SLD 15	0.00053	0.29595	-0.04434	-0.2541	-0.017	-0.0107
102	SLD 16	0.00053	0.29595	-0.04434	-0.2541	-0.017	-0.0107
102	SLV 1	-0.02614	-0.78056	-0.05569	0.6702	-0.0136	0.0282
102	SLV 2	-0.02614	-0.78056	-0.05569	0.6702	-0.0136	0.0282
102	SLV 3	-0.02614	0.78056	-0.05569	-0.6702	-0.0136	-0.0282
102	SLV 4	-0.02614	0.78056	-0.05569	-0.6702	-0.0136	-0.0282
102	SLV 5	-0.01339	-2.60187	-0.05026	2.2339	-0.0152	0.0942
102	SLV 6	-0.01339	-2.60187	-0.05026	2.2339	-0.0152	0.0942
102	SLV 7	-0.01339	2.60187	-0.05026	-2.2339	-0.0152	-0.0942
102	SLV 8	-0.01339	2.60187	-0.05026	-2.2339	-0.0152	-0.0942
102	SLV 9	-0.00245	-2.60187	-0.04561	2.2339	-0.0166	0.0942
102	SLV 10	-0.00245	-2.60187	-0.04561	2.2339	-0.0166	0.0942
102	SLV 11	-0.00245	2.60187	-0.04561	-2.2339	-0.0166	-0.0942
102	SLV 12	-0.00245	2.60187	-0.04561	-2.2339	-0.0166	-0.0942
102	SLV 13	0.0103	-0.78056	-0.04019	0.6702	-0.0183	0.0282
102	SLV 14	0.0103	-0.78056	-0.04019	0.6702	-0.0183	0.0282
102	SLV 15	0.0103	0.78056	-0.04019	-0.6702	-0.0183	-0.0282
102	SLV 16	0.0103	0.78056	-0.04019	-0.6702	-0.0183	-0.0282
103	SLU 1	0.00792	-0.00001	-0.04794	0.0001	0.0159	0
103	SLU 2	0.05394	-0.00001	-0.47535	0.0001	0.1784	0
103	SLU 3	0.05394	0	-0.47535	0.0001	0.1784	0
103	SLU 4	0.00792	0.00002	-0.04794	0.0001	0.0159	0
103	SLU 5	0.04243	0.00002	-0.3685	0.0001	0.1378	0
103	SLU 6	0.05453	-0.00001	-0.47988	0.0001	0.1798	0
103	SLU 7	0.05453	0	-0.47988	0.0001	0.1798	0
103	SLU 8	0.00851	0.00002	-0.05247	0.0001	0.0174	0
103	SLU 9	0.04302	0.00002	-0.37303	0.0001	0.1392	0
103	SLU 10	0.0091	-0.00001	-0.057	0.0001	0.0188	0
103	SLU 11	0.04361	-0.00001	-0.37756	0.0001	0.1407	0
103	SLU 12	0.0091	0	-0.057	0.0001	0.0188	0
103	SLU 13	0.04361	0	-0.37756	0.0001	0.1407	0
103	SLU 14	0.05394	-0.00015	-0.47535	0.0001	0.1784	0
103	SLU 15	0.05394	-0.00013	-0.47535	0.0001	0.1784	0
103	SLU 16	0.00792	-0.00012	-0.04794	0.0001	0.0159	0
103	SLU 17	0.04243	-0.00012	-0.3685	0.0001	0.1378	0
103	SLU 18	0.05453	-0.00015	-0.47988	0.0001	0.1798	0
103	SLU 19	0.05453	-0.00014	-0.47988	0.0001	0.1798	0
103	SLU 20	0.00851	-0.00012	-0.05247	0.0001	0.0174	0
103	SLU 21	0.04302	-0.00012	-0.37303	0.0001	0.1392	0
103	SLU 22	0.0091	-0.00015	-0.057	0.0002	0.0188	0
103	SLU 23	0.04361	-0.00015	-0.37756	0.0001	0.1407	0
103	SLU 24	0.0091	-0.00013	-0.057	0.0001	0.0188	0
103	SLU 25	0.04361	-0.00014	-0.37756	0.0001	0.1407	0
103	SLU 26	0.00792	-0.00035	-0.04794	0.0002	0.0159	0
103	SLU 27	0.04243	-0.00035	-0.3685	0.0002	0.1378	0
103	SLU 28	0.00792	-0.00034	-0.04794	0.0002	0.0159	0
103	SLU 29	0.04243	-0.00034	-0.3685	0.0002	0.1378	0
103	SLU 30	0.00851	-0.00035	-0.05247	0.0002	0.0174	0
103	SLU 31	0.04302	-0.00035	-0.37303	0.0002	0.1392	0
103	SLU 32	0.00851	-0.00034	-0.05247	0.0002	0.0174	0
103	SLU 33	0.04302	-0.00034	-0.37303	0.0002	0.1392	0
103	SLU 34	0.00792	-0.00001	-0.04794	0.0001	0.0159	0
103	SLU 35	0.05394	-0.00001	-0.47535	0.0001	0.1784	0
103	SLU 36	0.05394	0	-0.47535	0.0001	0.1784	0
103	SLU 37	0.00792	0.00002	-0.04794	0.0001	0.0159	0
103	SLU 38	0.04243	0.00002	-0.3685	0.0001	0.1378	0
103	SLU 39	0.05453	-0.00001	-0.47988	0.0001	0.1798	0
103	SLU 40	0.05453	0	-0.47988	0.0001	0.1798	0
103	SLU 41	0.00851	0.00002	-0.05247	0.0001	0.0174	0
103	SLU 42	0.04302	0.00002	-0.37303	0.0001	0.1392	0
103	SLU 43	0.0091	-0.00001	-0.057	0.0001	0.0188	0
103	SLU 44	0.04361	-0.00001	-0.37756	0.0001	0.1407	0
103	SLU 45	0.0091	0	-0.057	0.0001	0.0188	0
103	SLU 46	0.04361	0	-0.37756	0.0001	0.1407	0
103	SLU 47	0.05394	-0.00015	-0.47535	0.0001	0.1784	0
103	SLU 48	0.05394	-0.00013	-0.47535	0.0001	0.1784	0
103	SLU 49	0.00792	-0.00012	-0.04794	0.0001	0.0159	0
103	SLU 50	0.04243	-0.00012	-0.3685	0.0001	0.1378	0
103	SLU 51	0.05453	-0.00015	-0.47988	0.0001	0.1798	0
103	SLU 52	0.05453	-0.00014	-0.47988	0.0001	0.1798	0
103	SLU 53	0.00851	-0.00012	-0.05247	0.0001	0.0174	0
103	SLU 54	0.04302	-0.00012	-0.37303	0.0001	0.1392	0
103	SLU 55	0.0091	-0.00015	-0.057	0.0002	0.0188	0
103	SLU 56	0.04361	-0.00015	-0.37756	0.0001	0.1407	0
103	SLU 57	0.0091	-0.00013	-0.057	0.0001	0.0188	0
103	SLU 58	0.04361	-0.00014	-0.37756	0.0001	0.1407	0
103	SLU 59	0.00792	-0.00035	-0.04794	0.0002	0.0159	0
103	SLU 60	0.04243	-0.00035	-0.3685	0.0002	0.1378	0
103	SLU 61	0.00792	-0.00034	-0.04794	0.0002	0.0159	0
103	SLU 62	0.04243	-0.00034	-0.3685	0.0002	0.1378	0
103	SLU 63	0.00851	-0.00035	-0.05247	0.0002	0.0174	0

Nodo	Cont.	Spostamento			Rotazione		
Ind.	N.br.	ux	uy	uz	rx	ry	rz
103	SLU 64	0.04302	-0.00035	-0.37303	0.0002	0.1392	0
103	SLU 65	0.00851	-0.00034	-0.05247	0.0002	0.0174	0
103	SLU 66	0.04302	-0.00034	-0.37303	0.0002	0.1392	0
103	SLU 67	0.0103	-0.00001	-0.06232	0.0001	0.0207	0
103	SLU 68	0.05631	-0.00001	-0.48973	0.0001	0.1831	0
103	SLU 69	0.05631	0	-0.48973	0.0001	0.1831	0
103	SLU 70	0.0103	0.00002	-0.06232	0.0001	0.0207	0
103	SLU 71	0.04481	0.00002	-0.38288	0.0001	0.1425	0
103	SLU 72	0.05691	-0.00001	-0.49426	0.0001	0.1846	0
103	SLU 73	0.05691	0	-0.49426	0.0001	0.1846	0
103	SLU 74	0.01089	0.00002	-0.06685	0.0001	0.0222	0
103	SLU 75	0.0454	0.00002	-0.38741	0.0001	0.144	0
103	SLU 76	0.01148	-0.00001	-0.07138	0.0001	0.0236	0
103	SLU 77	0.04599	-0.00001	-0.39194	0.0001	0.1454	0
103	SLU 78	0.01148	0	-0.07138	0.0001	0.0236	0
103	SLU 79	0.04599	0	-0.39194	0.0001	0.1454	0
103	SLU 80	0.05631	-0.00015	-0.48973	0.0002	0.1831	0
103	SLU 81	0.05631	-0.00014	-0.48973	0.0002	0.1831	0
103	SLU 82	0.0103	-0.00012	-0.06232	0.0002	0.0207	0
103	SLU 83	0.04481	-0.00012	-0.38288	0.0002	0.1425	0
103	SLU 84	0.05691	-0.00015	-0.49426	0.0002	0.1846	0
103	SLU 85	0.05691	-0.00014	-0.49426	0.0002	0.1846	0
103	SLU 86	0.01089	-0.00012	-0.06685	0.0002	0.0222	0
103	SLU 87	0.0454	-0.00012	-0.38741	0.0002	0.144	0
103	SLU 88	0.01148	-0.00015	-0.07138	0.0002	0.0236	0
103	SLU 89	0.04599	-0.00015	-0.39194	0.0002	0.1454	0
103	SLU 90	0.01148	-0.00014	-0.07138	0.0002	0.0236	0
103	SLU 91	0.04599	-0.00014	-0.39194	0.0002	0.1454	0
103	SLU 92	0.0103	-0.00036	-0.06232	0.0003	0.0207	0
103	SLU 93	0.04481	-0.00036	-0.38288	0.0003	0.1425	0
103	SLU 94	0.0103	-0.00034	-0.06232	0.0003	0.0207	0
103	SLU 95	0.04481	-0.00034	-0.38288	0.0003	0.1425	0
103	SLU 96	0.01089	-0.00036	-0.06685	0.0003	0.0222	0
103	SLU 97	0.0454	-0.00036	-0.38741	0.0003	0.144	0
103	SLU 98	0.01089	-0.00034	-0.06685	0.0003	0.0222	0
103	SLU 99	0.0454	-0.00034	-0.38741	0.0003	0.144	0
103	SLU 100	0.0103	-0.00001	-0.06232	0.0001	0.0207	0
103	SLU 101	0.05631	-0.00001	-0.48973	0.0001	0.1831	0
103	SLU 102	0.05631	0	-0.48973	0.0001	0.1831	0
103	SLU 103	0.0103	0.00002	-0.06232	0.0001	0.0207	0
103	SLU 104	0.04481	0.00002	-0.38288	0.0001	0.1425	0
103	SLU 105	0.05691	-0.00001	-0.49426	0.0001	0.1846	0
103	SLU 106	0.05691	0	-0.49426	0.0001	0.1846	0
103	SLU 107	0.01089	0.00002	-0.06685	0.0001	0.0222	0
103	SLU 108	0.0454	0.00002	-0.38741	0.0001	0.144	0
103	SLU 109	0.01148	-0.00001	-0.07138	0.0001	0.0236	0
103	SLU 110	0.04599	-0.00001	-0.39194	0.0001	0.1454	0
103	SLU 111	0.01148	0	-0.07138	0.0001	0.0236	0
103	SLU 112	0.04599	0	-0.39194	0.0001	0.1454	0
103	SLU 113	0.05631	-0.00015	-0.48973	0.0002	0.1831	0
103	SLU 114	0.05631	-0.00014	-0.48973	0.0002	0.1831	0
103	SLU 115	0.0103	-0.00012	-0.06232	0.0002	0.0207	0
103	SLU 116	0.04481	-0.00012	-0.38288	0.0002	0.1425	0
103	SLU 117	0.05691	-0.00015	-0.49426	0.0002	0.1846	0
103	SLU 118	0.05691	-0.00014	-0.49426	0.0002	0.1846	0
103	SLU 119	0.01089	-0.00012	-0.06685	0.0002	0.0222	0
103	SLU 120	0.0454	-0.00012	-0.38741	0.0002	0.144	0
103	SLU 121	0.01148	-0.00015	-0.07138	0.0002	0.0236	0
103	SLU 122	0.04599	-0.00015	-0.39194	0.0002	0.1454	0
103	SLU 123	0.01148	-0.00014	-0.07138	0.0002	0.0236	0
103	SLU 124	0.04599	-0.00014	-0.39194	0.0002	0.1454	0
103	SLU 125	0.0103	-0.00036	-0.06232	0.0003	0.0207	0
103	SLU 126	0.04481	-0.00036	-0.38288	0.0003	0.1425	0
103	SLU 127	0.0103	-0.00034	-0.06232	0.0003	0.0207	0
103	SLU 128	0.04481	-0.00034	-0.38288	0.0003	0.1425	0
103	SLU 129	0.01089	-0.00036	-0.06685	0.0003	0.0222	0
103	SLU 130	0.0454	-0.00036	-0.38741	0.0003	0.144	0
103	SLU 131	0.01089	-0.00034	-0.06685	0.0003	0.0222	0
103	SLU 132	0.0454	-0.00034	-0.38741	0.0003	0.144	0
103	SLE RA 1	0.00792	-0.00001	-0.04794	0.0001	0.0159	0
103	SLE RA 2	0.0386	-0.00001	-0.33288	0.0001	0.1242	0
103	SLE RA 3	0.0386	0	-0.33288	0.0001	0.1242	0
103	SLE RA 4	0.00792	0.00001	-0.04794	0.0001	0.0159	0
103	SLE RA 5	0.03093	0.00001	-0.26164	0.0001	0.0972	0
103	SLE RA 6	0.03899	-0.00001	-0.3359	0.0001	0.1252	0
103	SLE RA 7	0.03899	0	-0.3359	0.0001	0.1252	0
103	SLE RA 8	0.00831	0.00001	-0.05096	0.0001	0.0169	0
103	SLE RA 9	0.03132	0.00001	-0.26466	0.0001	0.0981	0
103	SLE RA 10	0.00871	-0.00001	-0.05398	0.0001	0.0179	0
103	SLE RA 11	0.03172	-0.00001	-0.26768	0.0001	0.0991	0
103	SLE RA 12	0.00871	0	-0.05398	0.0001	0.0179	0
103	SLE RA 13	0.03172	0	-0.26768	0.0001	0.0991	0
103	SLE RA 14	0.0386	-0.0001	-0.33288	0.0001	0.1242	0
103	SLE RA 15	0.0386	-0.00009	-0.33288	0.0001	0.1242	0
103	SLE RA 16	0.00792	-0.00008	-0.04794	0.0001	0.0159	0
103	SLE RA 17	0.03093	-0.00008	-0.26164	0.0001	0.0972	0
103	SLE RA 18	0.03899	-0.0001	-0.3359	0.0001	0.1252	0
103	SLE RA 19	0.03899	-0.00009	-0.3359	0.0001	0.1252	0
103	SLE RA 20	0.00831	-0.00008	-0.05096	0.0001	0.0169	0
103	SLE RA 21	0.03132	-0.00008	-0.26466	0.0001	0.0981	0
103	SLE RA 22	0.00871	-0.0001	-0.05398	0.0001	0.0179	0
103	SLE RA 23	0.03172	-0.0001	-0.26768	0.0001	0.0991	0
103	SLE RA 24	0.00871	-0.00009	-0.05398	0.0001	0.0179	0
103	SLE RA 25	0.03172	-0.00009	-0.26768	0.0001	0.0991	0
103	SLE RA 26	0.00792	-0.00024	-0.04794	0.0002	0.0159	0

Nodo	Cont.	Spostamento			Rotazione		
Ind.	N.br.	ux	uy	uz	rx	ry	rz
103	SLE RA 27	0.03093	-0.00024	-0.26164	0.0002	0.0972	0
103	SLE RA 28	0.00792	-0.00023	-0.04794	0.0002	0.0159	0
103	SLE RA 29	0.03093	-0.00023	-0.26164	0.0002	0.0972	0
103	SLE RA 30	0.00831	-0.00024	-0.05096	0.0002	0.0169	0
103	SLE RA 31	0.03132	-0.00024	-0.26466	0.0002	0.0981	0
103	SLE RA 32	0.00831	-0.00023	-0.05096	0.0002	0.0169	0
103	SLE RA 33	0.03132	-0.00023	-0.26466	0.0002	0.0981	0
103	SLE FR 1	0.00792	-0.00001	-0.04794	0.0001	0.0159	0
103	SLE FR 2	0.03093	-0.00001	-0.26164	0.0001	0.0972	0
103	SLE FR 3	0.00792	0	-0.04794	0.0001	0.0159	0
103	SLE FR 4	0.00808	-0.00001	-0.04915	0.0001	0.0163	0
103	SLE FR 5	0.00792	-0.0001	-0.04794	0.0001	0.0159	0
103	SLE QP 1	0.00792	-0.00001	-0.04794	0.0001	0.0159	0
103	SLO 1	-0.00236	-0.32029	-0.04357	0.275	0.0173	-0.0116
103	SLO 2	-0.00236	-0.32029	-0.04357	0.275	0.0173	-0.0116
103	SLO 3	-0.00236	0.32028	-0.04357	-0.2749	0.0173	0.0116
103	SLO 4	-0.00236	0.32028	-0.04357	-0.2749	0.0173	0.0116
103	SLO 5	0.00484	-1.06763	-0.04663	0.9166	0.0163	-0.0387
103	SLO 6	0.00484	-1.06763	-0.04663	0.9166	0.0163	-0.0387
103	SLO 7	0.00484	1.06762	-0.04663	-0.9164	0.0163	0.0387
103	SLO 8	0.00484	1.06762	-0.04663	-0.9164	0.0163	0.0387
103	SLO 9	0.01101	-1.06763	-0.04925	0.9166	0.0155	-0.0387
103	SLO 10	0.01101	-1.06763	-0.04925	0.9166	0.0155	-0.0387
103	SLO 11	0.01101	1.06762	-0.04925	-0.9164	0.0155	0.0387
103	SLO 12	0.01101	1.06762	-0.04925	-0.9164	0.0155	0.0387
103	SLO 13	0.0182	-0.32029	-0.05231	0.275	0.0146	-0.0116
103	SLO 14	0.0182	-0.32029	-0.05231	0.275	0.0146	-0.0116
103	SLO 15	0.0182	0.32028	-0.05231	-0.2749	0.0146	0.0116
103	SLO 16	0.0182	0.32028	-0.05231	-0.2749	0.0146	0.0116
103	SLD 1	-0.00053	-0.29595	-0.04434	0.2541	0.017	-0.0107
103	SLD 2	-0.00053	-0.29595	-0.04434	0.2541	0.017	-0.0107
103	SLD 3	-0.00053	0.29593	-0.04434	-0.254	0.017	0.0107
103	SLD 4	-0.00053	0.29593	-0.04434	-0.254	0.017	0.0107
103	SLD 5	0.00538	-0.98648	-0.04686	0.8469	0.0163	-0.0357
103	SLD 6	0.00538	-0.98648	-0.04686	0.8469	0.0163	-0.0357
103	SLD 7	0.00538	0.98646	-0.04686	-0.8467	0.0163	0.0358
103	SLD 8	0.00538	0.98646	-0.04686	-0.8467	0.0163	0.0358
103	SLD 9	0.01046	-0.98648	-0.04902	0.8469	0.0156	-0.0357
103	SLD 10	0.01046	-0.98648	-0.04902	0.8469	0.0156	-0.0357
103	SLD 11	0.01046	0.98646	-0.04902	-0.8467	0.0156	0.0358
103	SLD 12	0.01046	0.98646	-0.04902	-0.8467	0.0156	0.0358
103	SLD 13	0.01637	-0.29595	-0.05153	0.2541	0.0148	-0.0107
103	SLD 14	0.01637	-0.29595	-0.05153	0.2541	0.0148	-0.0107
103	SLD 15	0.01637	0.29593	-0.05153	-0.254	0.0148	0.0107
103	SLD 16	0.01637	0.29593	-0.05153	-0.254	0.0148	0.0107
103	SLV 1	-0.0103	-0.78055	-0.04019	0.6701	0.0183	-0.0283
103	SLV 2	-0.0103	-0.78055	-0.04019	0.6701	0.0183	-0.0283
103	SLV 3	-0.0103	0.78054	-0.04019	-0.67	0.0183	0.0283
103	SLV 4	-0.0103	0.78054	-0.04019	-0.67	0.0183	0.0283
103	SLV 5	0.00245	-2.60183	-0.04561	2.2335	0.0166	-0.0943
103	SLV 6	0.00245	-2.60183	-0.04561	2.2335	0.0166	-0.0943
103	SLV 7	0.00245	2.60182	-0.04561	-2.2334	0.0166	0.0943
103	SLV 8	0.00245	2.60182	-0.04561	-2.2334	0.0166	0.0943
103	SLV 9	0.01339	-2.60183	-0.05026	2.2335	0.0152	-0.0943
103	SLV 10	0.01339	-2.60183	-0.05026	2.2335	0.0152	-0.0943
103	SLV 11	0.01339	2.60182	-0.05026	-2.2334	0.0152	0.0943
103	SLV 12	0.01339	2.60182	-0.05026	-2.2334	0.0152	0.0943
103	SLV 13	0.02614	-0.78055	-0.05569	0.6701	0.0136	-0.0283
103	SLV 14	0.02614	-0.78055	-0.05569	0.6701	0.0136	-0.0283
103	SLV 15	0.02614	0.78054	-0.05569	-0.67	0.0136	0.0283
103	SLV 16	0.02614	0.78054	-0.05569	-0.67	0.0136	0.0283
104	SLU 1	-0.00792	-0.00001	-0.04794	0.0001	-0.0159	0
104	SLU 2	-0.05394	-0.00001	-0.47535	0.0001	-0.1784	0
104	SLU 3	-0.05394	0	-0.47535	0.0001	-0.1784	0
104	SLU 4	-0.00792	0.00002	-0.04794	0.0001	-0.0159	0
104	SLU 5	-0.04243	0.00002	-0.3685	0.0001	-0.1378	0
104	SLU 6	-0.05453	-0.00001	-0.47988	0.0001	-0.1798	0
104	SLU 7	-0.05453	0	-0.47988	0.0001	-0.1798	0
104	SLU 8	-0.00851	0.00002	-0.05247	0.0001	-0.0174	0
104	SLU 9	-0.04302	0.00002	-0.37303	0.0001	-0.1392	0
104	SLU 10	-0.0091	-0.00001	-0.057	0.0001	-0.0188	0
104	SLU 11	-0.04361	-0.00001	-0.37756	0.0001	-0.1407	0
104	SLU 12	-0.0091	0	-0.057	0.0001	-0.0188	0
104	SLU 13	-0.04361	0	-0.37756	0.0001	-0.1407	0
104	SLU 14	-0.05394	-0.00015	-0.47535	0.0001	-0.1784	0
104	SLU 15	-0.05394	-0.00013	-0.47535	0.0001	-0.1784	0
104	SLU 16	-0.00792	-0.00012	-0.04794	0.0001	-0.0159	0
104	SLU 17	-0.04243	-0.00012	-0.3685	0.0001	-0.1378	0
104	SLU 18	-0.05453	-0.00015	-0.47988	0.0001	-0.1798	0
104	SLU 19	-0.05453	-0.00014	-0.47988	0.0001	-0.1798	0
104	SLU 20	-0.00851	-0.00012	-0.05247	0.0001	-0.0174	0
104	SLU 21	-0.04302	-0.00012	-0.37303	0.0001	-0.1392	0
104	SLU 22	-0.0091	-0.00015	-0.057	0.0002	-0.0188	0
104	SLU 23	-0.04361	-0.00015	-0.37756	0.0001	-0.1407	0
104	SLU 24	-0.0091	-0.00014	-0.057	0.0001	-0.0188	0
104	SLU 25	-0.04361	-0.00014	-0.37756	0.0001	-0.1407	0
104	SLU 26	-0.00792	-0.00035	-0.04794	0.0002	-0.0159	0
104	SLU 27	-0.04243	-0.00035	-0.3685	0.0002	-0.1378	0
104	SLU 28	-0.00792	-0.00034	-0.04794	0.0002	-0.0159	0
104	SLU 29	-0.04243	-0.00034	-0.3685	0.0002	-0.1378	0
104	SLU 30	-0.00851	-0.00035	-0.05247	0.0002	-0.0174	0
104	SLU 31	-0.04302	-0.00035	-0.37303	0.0002	-0.1392	0
104	SLU 32	-0.00851	-0.00034	-0.05247	0.0002	-0.0174	0
104	SLU 33	-0.04302	-0.00034	-0.37303	0.0002	-0.1392	0
104	SLU 34	-0.00792	-0.00001	-0.04794	0.0001	-0.0159	0

Nodo	Cont.	Spostamento			Rotazione		
Ind.	N.br.	ux	uy	uz	rx	ry	rz
104	SLU 35	-0.05394	-0.00001	-0.47535	0.0001	-0.1784	0
104	SLU 36	-0.05394	0	-0.47535	0.0001	-0.1784	0
104	SLU 37	-0.00792	0.00002	-0.04794	0.0001	-0.0159	0
104	SLU 38	-0.04243	0.00002	-0.3685	0.0001	-0.1378	0
104	SLU 39	-0.05453	-0.00001	-0.47988	0.0001	-0.1798	0
104	SLU 40	-0.05453	0	-0.47988	0.0001	-0.1798	0
104	SLU 41	-0.00851	0.00002	-0.05247	0.0001	-0.0174	0
104	SLU 42	-0.04302	0.00002	-0.37303	0.0001	-0.1392	0
104	SLU 43	-0.0091	-0.00001	-0.057	0.0001	-0.0188	0
104	SLU 44	-0.04361	-0.00001	-0.37756	0.0001	-0.1407	0
104	SLU 45	-0.0091	0	-0.057	0.0001	-0.0188	0
104	SLU 46	-0.04361	0	-0.37756	0.0001	-0.1407	0
104	SLU 47	-0.05394	-0.00015	-0.47535	0.0001	-0.1784	0
104	SLU 48	-0.05394	-0.00013	-0.47535	0.0001	-0.1784	0
104	SLU 49	-0.00792	-0.00012	-0.04794	0.0001	-0.0159	0
104	SLU 50	-0.04243	-0.00012	-0.3685	0.0001	-0.1378	0
104	SLU 51	-0.05453	-0.00015	-0.47988	0.0001	-0.1798	0
104	SLU 52	-0.05453	-0.00014	-0.47988	0.0001	-0.1798	0
104	SLU 53	-0.00851	-0.00012	-0.05247	0.0001	-0.0174	0
104	SLU 54	-0.04302	-0.00012	-0.37303	0.0001	-0.1392	0
104	SLU 55	-0.0091	-0.00015	-0.057	0.0002	-0.0188	0
104	SLU 56	-0.04361	-0.00015	-0.37756	0.0001	-0.1407	0
104	SLU 57	-0.0091	-0.00014	-0.057	0.0001	-0.0188	0
104	SLU 58	-0.04361	-0.00014	-0.37756	0.0001	-0.1407	0
104	SLU 59	-0.00792	-0.00035	-0.04794	0.0002	-0.0159	0
104	SLU 60	-0.04243	-0.00035	-0.3685	0.0002	-0.1378	0
104	SLU 61	-0.00792	-0.00034	-0.04794	0.0002	-0.0159	0
104	SLU 62	-0.04243	-0.00034	-0.3685	0.0002	-0.1378	0
104	SLU 63	-0.00851	-0.00035	-0.05247	0.0002	-0.0174	0
104	SLU 64	-0.04302	-0.00035	-0.37303	0.0002	-0.1392	0
104	SLU 65	-0.00851	-0.00034	-0.05247	0.0002	-0.0174	0
104	SLU 66	-0.04302	-0.00034	-0.37303	0.0002	-0.1392	0
104	SLU 67	-0.0103	-0.00001	-0.06232	0.0001	-0.0207	0
104	SLU 68	-0.05631	-0.00001	-0.48973	0.0001	-0.1831	0
104	SLU 69	-0.05631	0	-0.48973	0.0001	-0.1831	0
104	SLU 70	-0.0103	0.00002	-0.06232	0.0001	-0.0207	0
104	SLU 71	-0.04481	0.00002	-0.38288	0.0001	-0.1425	0
104	SLU 72	-0.05691	-0.00001	-0.49426	0.0001	-0.1846	0
104	SLU 73	-0.05691	0	-0.49426	0.0001	-0.1846	0
104	SLU 74	-0.01089	0.00002	-0.06685	0.0001	-0.0222	0
104	SLU 75	-0.0454	0.00002	-0.38741	0.0001	-0.144	0
104	SLU 76	-0.01148	-0.00001	-0.07138	0.0001	-0.0236	0
104	SLU 77	-0.04599	-0.00001	-0.39194	0.0001	-0.1454	0
104	SLU 78	-0.01148	0	-0.07138	0.0001	-0.0236	0
104	SLU 79	-0.04599	0	-0.39194	0.0001	-0.1454	0
104	SLU 80	-0.05631	-0.00015	-0.48973	0.0002	-0.1831	0
104	SLU 81	-0.05631	-0.00014	-0.48973	0.0002	-0.1831	0
104	SLU 82	-0.0103	-0.00012	-0.06232	0.0002	-0.0207	0
104	SLU 83	-0.04481	-0.00012	-0.38288	0.0002	-0.1425	0
104	SLU 84	-0.05691	-0.00015	-0.49426	0.0002	-0.1846	0
104	SLU 85	-0.05691	-0.00014	-0.49426	0.0002	-0.1846	0
104	SLU 86	-0.01089	-0.00012	-0.06685	0.0002	-0.0222	0
104	SLU 87	-0.0454	-0.00012	-0.38741	0.0002	-0.144	0
104	SLU 88	-0.01148	-0.00015	-0.07138	0.0002	-0.0236	0
104	SLU 89	-0.04599	-0.00015	-0.39194	0.0002	-0.1454	0
104	SLU 90	-0.01148	-0.00014	-0.07138	0.0002	-0.0236	0
104	SLU 91	-0.04599	-0.00014	-0.39194	0.0002	-0.1454	0
104	SLU 92	-0.0103	-0.00036	-0.06232	0.0003	-0.0207	0
104	SLU 93	-0.04481	-0.00036	-0.38288	0.0003	-0.1425	0
104	SLU 94	-0.0103	-0.00034	-0.06232	0.0003	-0.0207	0
104	SLU 95	-0.04481	-0.00034	-0.38288	0.0003	-0.1425	0
104	SLU 96	-0.01089	-0.00036	-0.06685	0.0003	-0.0222	0
104	SLU 97	-0.0454	-0.00036	-0.38741	0.0003	-0.144	0
104	SLU 98	-0.01089	-0.00034	-0.06685	0.0003	-0.0222	0
104	SLU 99	-0.0454	-0.00034	-0.38741	0.0003	-0.144	0
104	SLU 100	-0.0103	-0.00001	-0.06232	0.0001	-0.0207	0
104	SLU 101	-0.05631	-0.00001	-0.48973	0.0001	-0.1831	0
104	SLU 102	-0.05631	0	-0.48973	0.0001	-0.1831	0
104	SLU 103	-0.0103	0.00002	-0.06232	0.0001	-0.0207	0
104	SLU 104	-0.04481	0.00002	-0.38288	0.0001	-0.1425	0
104	SLU 105	-0.05691	-0.00001	-0.49426	0.0001	-0.1846	0
104	SLU 106	-0.05691	0	-0.49426	0.0001	-0.1846	0
104	SLU 107	-0.01089	0.00002	-0.06685	0.0001	-0.0222	0
104	SLU 108	-0.0454	0.00002	-0.38741	0.0001	-0.144	0
104	SLU 109	-0.01148	-0.00001	-0.07138	0.0001	-0.0236	0
104	SLU 110	-0.04599	-0.00001	-0.39194	0.0001	-0.1454	0
104	SLU 111	-0.01148	0	-0.07138	0.0001	-0.0236	0
104	SLU 112	-0.04599	0	-0.39194	0.0001	-0.1454	0
104	SLU 113	-0.05631	-0.00015	-0.48973	0.0002	-0.1831	0
104	SLU 114	-0.05631	-0.00014	-0.48973	0.0002	-0.1831	0
104	SLU 115	-0.0103	-0.00012	-0.06232	0.0002	-0.0207	0
104	SLU 116	-0.04481	-0.00012	-0.38288	0.0002	-0.1425	0
104	SLU 117	-0.05691	-0.00015	-0.49426	0.0002	-0.1846	0
104	SLU 118	-0.05691	-0.00014	-0.49426	0.0002	-0.1846	0
104	SLU 119	-0.01089	-0.00012	-0.06685	0.0002	-0.0222	0
104	SLU 120	-0.0454	-0.00012	-0.38741	0.0002	-0.144	0
104	SLU 121	-0.01148	-0.00015	-0.07138	0.0002	-0.0236	0
104	SLU 122	-0.04599	-0.00015	-0.39194	0.0002	-0.1454	0
104	SLU 123	-0.01148	-0.00014	-0.07138	0.0002	-0.0236	0
104	SLU 124	-0.04599	-0.00014	-0.39194	0.0002	-0.1454	0
104	SLU 125	-0.0103	-0.00036	-0.06232	0.0003	-0.0207	0
104	SLU 126	-0.04481	-0.00036	-0.38288	0.0003	-0.1425	0
104	SLU 127	-0.0103	-0.00034	-0.06232	0.0003	-0.0207	0
104	SLU 128	-0.04481	-0.00034	-0.38288	0.0003	-0.1425	0
104	SLU 129	-0.01089	-0.00036	-0.06685	0.0003	-0.0222	0

Nodo	Cont.	Spostamento			Rotazione		
Ind.	N.br.	ux	uy	uz	rx	ry	rz
104	SLU 130	-0.0454	-0.00036	-0.38741	0.0003	-0.144	0
104	SLU 131	-0.01089	-0.00034	-0.06685	0.0003	-0.0222	0
104	SLU 132	-0.0454	-0.00034	-0.38741	0.0003	-0.144	0
104	SLE RA 1	-0.00792	-0.00001	-0.04794	0.0001	-0.0159	0
104	SLE RA 2	-0.0386	-0.00001	-0.33288	0.0001	-0.1242	0
104	SLE RA 3	-0.0386	0	-0.33288	0.0001	-0.1242	0
104	SLE RA 4	-0.00792	0.00001	-0.04794	0.0001	-0.0159	0
104	SLE RA 5	-0.03093	0.00001	-0.26164	0.0001	-0.0972	0
104	SLE RA 6	-0.03899	-0.00001	-0.3359	0.0001	-0.1252	0
104	SLE RA 7	-0.03899	0	-0.3359	0.0001	-0.1252	0
104	SLE RA 8	-0.00831	0.00001	-0.05096	0.0001	-0.0169	0
104	SLE RA 9	-0.03132	0.00001	-0.26466	0.0001	-0.0981	0
104	SLE RA 10	-0.00871	-0.00001	-0.05398	0.0001	-0.0179	0
104	SLE RA 11	-0.03172	-0.00001	-0.26768	0.0001	-0.0991	0
104	SLE RA 12	-0.00871	0	-0.05398	0.0001	-0.0179	0
104	SLE RA 13	-0.03172	0	-0.26768	0.0001	-0.0991	0
104	SLE RA 14	-0.0386	-0.0001	-0.33288	0.0001	-0.1242	0
104	SLE RA 15	-0.0386	-0.00009	-0.33288	0.0001	-0.1242	0
104	SLE RA 16	-0.00792	-0.00008	-0.04794	0.0001	-0.0159	0
104	SLE RA 17	-0.03093	-0.00008	-0.26164	0.0001	-0.0972	0
104	SLE RA 18	-0.03899	-0.0001	-0.3359	0.0001	-0.1252	0
104	SLE RA 19	-0.03899	-0.00009	-0.3359	0.0001	-0.1252	0
104	SLE RA 20	-0.00831	-0.00008	-0.05096	0.0001	-0.0169	0
104	SLE RA 21	-0.03132	-0.00008	-0.26466	0.0001	-0.0981	0
104	SLE RA 22	-0.00871	-0.0001	-0.05398	0.0001	-0.0179	0
104	SLE RA 23	-0.03172	-0.0001	-0.26768	0.0001	-0.0991	0
104	SLE RA 24	-0.00871	-0.00009	-0.05398	0.0001	-0.0179	0
104	SLE RA 25	-0.03172	-0.00009	-0.26768	0.0001	-0.0991	0
104	SLE RA 26	-0.00792	-0.00024	-0.04794	0.0002	-0.0159	0
104	SLE RA 27	-0.03093	-0.00024	-0.26164	0.0002	-0.0972	0
104	SLE RA 28	-0.00792	-0.00023	-0.04794	0.0002	-0.0159	0
104	SLE RA 29	-0.03093	-0.00023	-0.26164	0.0002	-0.0972	0
104	SLE RA 30	-0.00831	-0.00024	-0.05096	0.0002	-0.0169	0
104	SLE RA 31	-0.03132	-0.00024	-0.26466	0.0002	-0.0981	0
104	SLE RA 32	-0.00831	-0.00023	-0.05096	0.0002	-0.0169	0
104	SLE RA 33	-0.03132	-0.00023	-0.26466	0.0002	-0.0981	0
104	SLE FR 1	-0.00792	-0.00001	-0.04794	0.0001	-0.0159	0
104	SLE FR 2	-0.03093	-0.00001	-0.26164	0.0001	-0.0972	0
104	SLE FR 3	-0.00792	0	-0.04794	0.0001	-0.0159	0
104	SLE FR 4	-0.00808	-0.00001	-0.04915	0.0001	-0.0163	0
104	SLE FR 5	-0.00792	-0.0001	-0.04794	0.0001	-0.0159	0
104	SLE QP 1	-0.00792	-0.00001	-0.04794	0.0001	-0.0159	0
104	SLO 1	-0.0182	-0.32029	-0.05231	0.275	-0.0146	0.0116
104	SLO 2	-0.0182	-0.32029	-0.05231	0.275	-0.0146	0.0116
104	SLO 3	-0.0182	0.32028	-0.05231	-0.2749	-0.0146	-0.0116
104	SLO 4	-0.0182	0.32028	-0.05231	-0.2749	-0.0146	-0.0116
104	SLO 5	-0.01101	-1.06763	-0.04925	0.9166	-0.0155	0.0387
104	SLO 6	-0.01101	-1.06763	-0.04925	0.9166	-0.0155	0.0387
104	SLO 7	-0.01101	1.06762	-0.04925	-0.9164	-0.0155	-0.0387
104	SLO 8	-0.01101	1.06762	-0.04925	-0.9164	-0.0155	-0.0387
104	SLO 9	-0.00484	-1.06763	-0.04663	0.9166	-0.0163	0.0387
104	SLO 10	-0.00484	-1.06763	-0.04663	0.9166	-0.0163	0.0387
104	SLO 11	-0.00484	1.06762	-0.04663	-0.9164	-0.0163	-0.0387
104	SLO 12	-0.00484	1.06762	-0.04663	-0.9164	-0.0163	-0.0387
104	SLO 13	0.00236	-0.32029	-0.04357	0.275	-0.0173	0.0116
104	SLO 14	0.00236	-0.32029	-0.04357	0.275	-0.0173	0.0116
104	SLO 15	0.00236	0.32028	-0.04357	-0.2749	-0.0173	-0.0116
104	SLO 16	0.00236	0.32028	-0.04357	-0.2749	-0.0173	-0.0116
104	SLD 1	-0.01637	-0.29595	-0.05153	0.2541	-0.0148	0.0107
104	SLD 2	-0.01637	-0.29595	-0.05153	0.2541	-0.0148	0.0107
104	SLD 3	-0.01637	0.29593	-0.05153	-0.254	-0.0148	-0.0107
104	SLD 4	-0.01637	0.29593	-0.05153	-0.254	-0.0148	-0.0107
104	SLD 5	-0.01046	-0.98648	-0.04902	0.8469	-0.0156	0.0357
104	SLD 6	-0.01046	-0.98648	-0.04902	0.8469	-0.0156	0.0357
104	SLD 7	-0.01046	0.98646	-0.04902	-0.8467	-0.0156	-0.0358
104	SLD 8	-0.01046	0.98646	-0.04902	-0.8467	-0.0156	-0.0358
104	SLD 9	-0.00538	-0.98648	-0.04686	0.8469	-0.0163	0.0357
104	SLD 10	-0.00538	-0.98648	-0.04686	0.8469	-0.0163	0.0357
104	SLD 11	-0.00538	0.98646	-0.04686	-0.8467	-0.0163	-0.0358
104	SLD 12	-0.00538	0.98646	-0.04686	-0.8467	-0.0163	-0.0358
104	SLD 13	0.00053	-0.29595	-0.04434	0.2541	-0.017	0.0107
104	SLD 14	0.00053	-0.29595	-0.04434	0.2541	-0.017	0.0107
104	SLD 15	0.00053	0.29593	-0.04434	-0.254	-0.017	-0.0107
104	SLD 16	0.00053	0.29593	-0.04434	-0.254	-0.017	-0.0107
104	SLV 1	-0.02614	-0.78055	-0.05569	0.6701	-0.0136	0.0283
104	SLV 2	-0.02614	-0.78055	-0.05569	0.6701	-0.0136	0.0283
104	SLV 3	-0.02614	0.78054	-0.05569	-0.67	-0.0136	-0.0283
104	SLV 4	-0.02614	0.78054	-0.05569	-0.67	-0.0136	-0.0283
104	SLV 5	-0.01339	-2.60183	-0.05026	2.2335	-0.0152	0.0943
104	SLV 6	-0.01339	-2.60183	-0.05026	2.2335	-0.0152	0.0943
104	SLV 7	-0.01339	2.60182	-0.05026	-2.2334	-0.0152	-0.0943
104	SLV 8	-0.01339	2.60182	-0.05026	-2.2334	-0.0152	-0.0943
104	SLV 9	-0.00245	-2.60183	-0.04561	2.2335	-0.0166	0.0943
104	SLV 10	-0.00245	-2.60183	-0.04561	2.2335	-0.0166	0.0943
104	SLV 11	-0.00245	2.60182	-0.04561	-2.2334	-0.0166	-0.0943
104	SLV 12	-0.00245	2.60182	-0.04561	-2.2334	-0.0166	-0.0943
104	SLV 13	0.0103	-0.78055	-0.04019	0.6701	-0.0183	0.0283
104	SLV 14	0.0103	-0.78055	-0.04019	0.6701	-0.0183	0.0283
104	SLV 15	0.0103	0.78054	-0.04019	-0.67	-0.0183	-0.0283
104	SLV 16	0.0103	0.78054	-0.04019	-0.67	-0.0183	-0.0283
105	SLU 1	0.00788	-0.00002	-0.04768	0.0002	0.0159	0
105	SLU 2	0.03089	-0.00002	-0.26137	0.0002	0.0971	0
105	SLU 3	0.031	0	-0.26246	0.0001	0.0975	0
105	SLU 4	0.00816	0.00001	-0.05042	0.0002	0.017	0
105	SLU 5	0.02542	0.00001	-0.21068	0.0001	0.0779	0

Nodo	Cont.	Spostamento			Rotazione		
Ind.	N.br.	ux	uy	uz	rx	ry	rz
105	SLU 6	0.03148	-0.00002	-0.26591	0.0002	0.0986	0
105	SLU 7	0.03159	0	-0.267	0.0002	0.099	0
105	SLU 8	0.00876	0.00001	-0.05496	0.0002	0.0184	0
105	SLU 9	0.02601	0.00001	-0.21522	0.0001	0.0793	0
105	SLU 10	0.00907	-0.00002	-0.05676	0.0002	0.0188	0
105	SLU 11	0.02632	-0.00002	-0.21703	0.0002	0.0797	0
105	SLU 12	0.00918	0	-0.05786	0.0002	0.0192	0
105	SLU 13	0.02644	-0.00001	-0.21812	0.0002	0.0801	0
105	SLU 14	0.03123	-0.00015	-0.26362	0.0002	0.0977	0
105	SLU 15	0.03134	-0.00014	-0.26471	0.0002	0.0981	0
105	SLU 16	0.0085	-0.00013	-0.05267	0.0002	0.0176	0
105	SLU 17	0.02576	-0.00013	-0.21293	0.0002	0.0785	0
105	SLU 18	0.03182	-0.00016	-0.26816	0.0002	0.0992	0
105	SLU 19	0.03193	-0.00014	-0.26925	0.0002	0.0996	0
105	SLU 20	0.0091	-0.00013	-0.05721	0.0002	0.019	0
105	SLU 21	0.02635	-0.00013	-0.21747	0.0002	0.0799	0
105	SLU 22	0.00941	-0.00016	-0.05901	0.0002	0.0194	0
105	SLU 23	0.02666	-0.00016	-0.21927	0.0002	0.0803	0
105	SLU 24	0.00952	-0.00014	-0.06011	0.0002	0.0198	0
105	SLU 25	0.02678	-0.00014	-0.22037	0.0002	0.0807	0
105	SLU 26	0.00873	-0.00036	-0.05331	0.0003	0.0174	0
105	SLU 27	0.02599	-0.00036	-0.21357	0.0003	0.0783	0
105	SLU 28	0.00884	-0.00035	-0.0544	0.0003	0.0178	0
105	SLU 29	0.0261	-0.00035	-0.21466	0.0003	0.0788	0
105	SLU 30	0.00933	-0.00036	-0.05785	0.0003	0.0189	0
105	SLU 31	0.02658	-0.00036	-0.21811	0.0003	0.0798	0
105	SLU 32	0.00944	-0.00035	-0.05894	0.0003	0.0193	0
105	SLU 33	0.02669	-0.00035	-0.2192	0.0003	0.0802	0
105	SLU 34	0.00788	-0.00002	-0.04768	0.0002	0.0159	0
105	SLU 35	0.03089	-0.00002	-0.26137	0.0002	0.0971	0
105	SLU 36	0.031	0	-0.26246	0.0001	0.0975	0
105	SLU 37	0.00816	0.00001	-0.05042	0.0002	0.017	0
105	SLU 38	0.02542	0.00001	-0.21068	0.0001	0.0779	0
105	SLU 39	0.03148	-0.00002	-0.26591	0.0002	0.0986	0
105	SLU 40	0.03159	0	-0.267	0.0002	0.099	0
105	SLU 41	0.00876	0.00001	-0.05496	0.0002	0.0184	0
105	SLU 42	0.02601	0.00001	-0.21522	0.0001	0.0793	0
105	SLU 43	0.00907	-0.00002	-0.05676	0.0002	0.0188	0
105	SLU 44	0.02632	-0.00002	-0.21703	0.0002	0.0797	0
105	SLU 45	0.00918	0	-0.05786	0.0002	0.0192	0
105	SLU 46	0.02644	-0.00001	-0.21812	0.0002	0.0801	0
105	SLU 47	0.03123	-0.00015	-0.26362	0.0002	0.0977	0
105	SLU 48	0.03134	-0.00014	-0.26471	0.0002	0.0981	0
105	SLU 49	0.0085	-0.00013	-0.05267	0.0002	0.0176	0
105	SLU 50	0.02576	-0.00013	-0.21293	0.0002	0.0785	0
105	SLU 51	0.03182	-0.00016	-0.26816	0.0002	0.0992	0
105	SLU 52	0.03193	-0.00014	-0.26925	0.0002	0.0996	0
105	SLU 53	0.0091	-0.00013	-0.05721	0.0002	0.019	0
105	SLU 54	0.02635	-0.00013	-0.21747	0.0002	0.0799	0
105	SLU 55	0.00941	-0.00016	-0.05901	0.0002	0.0194	0
105	SLU 56	0.02666	-0.00016	-0.21927	0.0002	0.0803	0
105	SLU 57	0.00952	-0.00014	-0.06011	0.0002	0.0198	0
105	SLU 58	0.02678	-0.00014	-0.22037	0.0002	0.0807	0
105	SLU 59	0.00873	-0.00036	-0.05331	0.0003	0.0174	0
105	SLU 60	0.02599	-0.00036	-0.21357	0.0003	0.0783	0
105	SLU 61	0.00884	-0.00035	-0.0544	0.0003	0.0178	0
105	SLU 62	0.0261	-0.00035	-0.21466	0.0003	0.0788	0
105	SLU 63	0.00933	-0.00036	-0.05785	0.0003	0.0189	0
105	SLU 64	0.02658	-0.00036	-0.21811	0.0003	0.0798	0
105	SLU 65	0.00944	-0.00035	-0.05894	0.0003	0.0193	0
105	SLU 66	0.02669	-0.00035	-0.2192	0.0003	0.0802	0
105	SLU 67	0.01024	-0.00002	-0.06199	0.0002	0.0207	0
105	SLU 68	0.03325	-0.00002	-0.27567	0.0002	0.1019	0
105	SLU 69	0.03336	-0.00001	-0.27677	0.0002	0.1023	0
105	SLU 70	0.01053	0.00001	-0.06473	0.0002	0.0217	0
105	SLU 71	0.02778	0.00001	-0.22499	0.0002	0.0826	0
105	SLU 72	0.03385	-0.00002	-0.28021	0.0002	0.1033	0
105	SLU 73	0.03396	-0.00001	-0.28131	0.0002	0.1038	0
105	SLU 74	0.01112	0.00001	-0.06927	0.0002	0.0232	0
105	SLU 75	0.02838	0.00001	-0.22953	0.0002	0.0841	0
105	SLU 76	0.01143	-0.00002	-0.07107	0.0002	0.0236	0
105	SLU 77	0.02869	-0.00002	-0.23133	0.0002	0.0845	0
105	SLU 78	0.01155	-0.00001	-0.07216	0.0002	0.024	0
105	SLU 79	0.0288	-0.00001	-0.23242	0.0002	0.0849	0
105	SLU 80	0.03359	-0.00016	-0.27792	0.0003	0.1025	0
105	SLU 81	0.0337	-0.00015	-0.27902	0.0003	0.1029	0
105	SLU 82	0.01087	-0.00013	-0.06697	0.0003	0.0223	0
105	SLU 83	0.02812	-0.00013	-0.22724	0.0003	0.0832	0
105	SLU 84	0.03419	-0.00016	-0.28246	0.0003	0.1039	0
105	SLU 85	0.0343	-0.00015	-0.28356	0.0003	0.1044	0
105	SLU 86	0.01146	-0.00013	-0.07151	0.0003	0.0238	0
105	SLU 87	0.02872	-0.00013	-0.23178	0.0003	0.0847	0
105	SLU 88	0.01177	-0.00016	-0.07332	0.0003	0.0242	0
105	SLU 89	0.02903	-0.00016	-0.23358	0.0003	0.0851	0
105	SLU 90	0.01189	-0.00015	-0.07441	0.0003	0.0246	0
105	SLU 91	0.02914	-0.00015	-0.23467	0.0003	0.0855	0
105	SLU 92	0.01109	-0.00037	-0.06761	0.0004	0.0222	0
105	SLU 93	0.02835	-0.00037	-0.22787	0.0004	0.0831	0
105	SLU 94	0.01121	-0.00036	-0.06871	0.0004	0.0226	0
105	SLU 95	0.02846	-0.00036	-0.22897	0.0004	0.0835	0
105	SLU 96	0.01169	-0.00037	-0.07215	0.0004	0.0236	0
105	SLU 97	0.02894	-0.00037	-0.23241	0.0004	0.0845	0
105	SLU 98	0.0118	-0.00036	-0.07325	0.0004	0.0241	0
105	SLU 99	0.02906	-0.00036	-0.23351	0.0004	0.085	0
105	SLU 100	0.01024	-0.00002	-0.06199	0.0002	0.0207	0

Nodo	Cont.	Spostamento			Rotazione		
Ind.	N.br.	ux	uy	uz	rx	ry	rz
105	SLU 101	0.03325	-0.00002	-0.27567	0.0002	0.1019	0
105	SLU 102	0.03336	-0.00001	-0.27677	0.0002	0.1023	0
105	SLU 103	0.01053	0.00001	-0.06473	0.0002	0.0217	0
105	SLU 104	0.02778	0.00001	-0.22499	0.0002	0.0826	0
105	SLU 105	0.03385	-0.00002	-0.28021	0.0002	0.1033	0
105	SLU 106	0.03396	-0.00001	-0.28131	0.0002	0.1038	0
105	SLU 107	0.01112	0.00001	-0.06927	0.0002	0.0232	0
105	SLU 108	0.02838	0.00001	-0.22953	0.0002	0.0841	0
105	SLU 109	0.01143	-0.00002	-0.07107	0.0002	0.0236	0
105	SLU 110	0.02869	-0.00002	-0.23133	0.0002	0.0845	0
105	SLU 111	0.01155	-0.00001	-0.07216	0.0002	0.024	0
105	SLU 112	0.0288	-0.00001	-0.23242	0.0002	0.0849	0
105	SLU 113	0.03359	-0.00016	-0.27792	0.0003	0.1025	0
105	SLU 114	0.0337	-0.00015	-0.27902	0.0003	0.1029	0
105	SLU 115	0.01087	-0.00013	-0.06697	0.0003	0.0223	0
105	SLU 116	0.02812	-0.00013	-0.22724	0.0003	0.0832	0
105	SLU 117	0.03419	-0.00016	-0.28246	0.0003	0.1039	0
105	SLU 118	0.0343	-0.00015	-0.28356	0.0003	0.1044	0
105	SLU 119	0.01146	-0.00013	-0.07151	0.0003	0.0238	0
105	SLU 120	0.02872	-0.00013	-0.23178	0.0003	0.0847	0
105	SLU 121	0.01177	-0.00016	-0.07332	0.0003	0.0242	0
105	SLU 122	0.02903	-0.00016	-0.23358	0.0003	0.0851	0
105	SLU 123	0.01189	-0.00015	-0.07441	0.0003	0.0246	0
105	SLU 124	0.02914	-0.00015	-0.23467	0.0003	0.0855	0
105	SLU 125	0.01109	-0.00037	-0.06761	0.0004	0.0222	0
105	SLU 126	0.02835	-0.00037	-0.22787	0.0004	0.0831	0
105	SLU 127	0.01121	-0.00036	-0.06871	0.0004	0.0226	0
105	SLU 128	0.02846	-0.00036	-0.22897	0.0004	0.0835	0
105	SLU 129	0.01169	-0.00037	-0.07215	0.0004	0.0236	0
105	SLU 130	0.02894	-0.00037	-0.23241	0.0004	0.0845	0
105	SLU 131	0.0118	-0.00036	-0.07325	0.0004	0.0241	0
105	SLU 132	0.02906	-0.00036	-0.23351	0.0004	0.085	0
105	SLE RA 1	0.00788	-0.00002	-0.04768	0.0002	0.0159	0
105	SLE RA 2	0.02322	-0.00002	-0.19014	0.0002	0.07	0
105	SLE RA 3	0.02329	-0.00001	-0.19087	0.0002	0.0703	0
105	SLE RA 4	0.00807	0	-0.04951	0.0002	0.0166	0
105	SLE RA 5	0.01957	0	-0.15635	0.0001	0.0572	0
105	SLE RA 6	0.02361	-0.00002	-0.19317	0.0002	0.071	0
105	SLE RA 7	0.02369	-0.00001	-0.1939	0.0002	0.0713	0
105	SLE RA 8	0.00847	0	-0.05253	0.0002	0.0176	0
105	SLE RA 9	0.01997	0	-0.15938	0.0002	0.0582	0
105	SLE RA 10	0.00867	-0.00002	-0.05374	0.0002	0.0178	0
105	SLE RA 11	0.02018	-0.00002	-0.16058	0.0002	0.0584	0
105	SLE RA 12	0.00875	-0.00001	-0.05447	0.0002	0.0181	0
105	SLE RA 13	0.02025	-0.00001	-0.16131	0.0002	0.0587	0
105	SLE RA 14	0.02344	-0.00011	-0.19164	0.0002	0.0704	0
105	SLE RA 15	0.02352	-0.0001	-0.19237	0.0002	0.0707	0
105	SLE RA 16	0.0083	-0.00009	-0.05101	0.0002	0.017	0
105	SLE RA 17	0.0198	-0.00009	-0.15785	0.0002	0.0576	0
105	SLE RA 18	0.02384	-0.00011	-0.19467	0.0002	0.0714	0
105	SLE RA 19	0.02392	-0.0001	-0.19539	0.0002	0.0717	0
105	SLE RA 20	0.00869	-0.00009	-0.05403	0.0002	0.018	0
105	SLE RA 21	0.0202	-0.00009	-0.16088	0.0002	0.0586	0
105	SLE RA 22	0.0089	-0.00011	-0.05524	0.0002	0.0182	0
105	SLE RA 23	0.0204	-0.00011	-0.16208	0.0002	0.0588	0
105	SLE RA 24	0.00898	-0.0001	-0.05597	0.0002	0.0185	0
105	SLE RA 25	0.02048	-0.0001	-0.16281	0.0002	0.0591	0
105	SLE RA 26	0.00845	-0.00025	-0.05143	0.0003	0.0169	0
105	SLE RA 27	0.01995	-0.00025	-0.15827	0.0003	0.0575	0
105	SLE RA 28	0.00852	-0.00024	-0.05216	0.0003	0.0172	0
105	SLE RA 29	0.02003	-0.00024	-0.159	0.0003	0.0578	0
105	SLE RA 30	0.00884	-0.00025	-0.05446	0.0003	0.0179	0
105	SLE RA 31	0.02035	-0.00025	-0.1613	0.0003	0.0585	0
105	SLE RA 32	0.00892	-0.00024	-0.05519	0.0003	0.0182	0
105	SLE RA 33	0.02042	-0.00024	-0.16203	0.0003	0.0588	0
105	SLE FR 1	0.00788	-0.00002	-0.04768	0.0002	0.0159	0
105	SLE FR 2	0.01938	-0.00002	-0.15453	0.0002	0.0565	0
105	SLE FR 3	0.00796	-0.00001	-0.04841	0.0002	0.0162	0
105	SLE FR 4	0.00804	-0.00002	-0.0489	0.0002	0.0163	0
105	SLE FR 5	0.00811	-0.00011	-0.04918	0.0002	0.0163	0
105	SLE QP 1	0.00788	-0.00002	-0.04768	0.0002	0.0159	0
105	SLO 1	-0.00236	-0.32028	-0.04333	0.2749	0.0172	-0.0116
105	SLO 2	-0.00236	-0.32028	-0.04333	0.2749	0.0172	-0.0116
105	SLO 3	-0.00236	0.32025	-0.04333	-0.2746	0.0172	0.0117
105	SLO 4	-0.00236	0.32025	-0.04333	-0.2746	0.0172	0.0117
105	SLO 5	0.00481	-1.06758	-0.04638	0.9161	0.0163	-0.0389
105	SLO 6	0.00481	-1.06758	-0.04638	0.9161	0.0163	-0.0389
105	SLO 7	0.00481	1.06755	-0.04638	-0.9157	0.0163	0.0389
105	SLO 8	0.00481	1.06755	-0.04638	-0.9157	0.0163	0.0389
105	SLO 9	0.01095	-1.06758	-0.04899	0.9161	0.0155	-0.0389
105	SLO 10	0.01095	-1.06758	-0.04899	0.9161	0.0155	-0.0389
105	SLO 11	0.01095	1.06755	-0.04899	-0.9157	0.0155	0.0389
105	SLO 12	0.01095	1.06755	-0.04899	-0.9157	0.0155	0.0389
105	SLO 13	0.01812	-0.32028	-0.05204	0.2749	0.0146	-0.0116
105	SLO 14	0.01812	-0.32028	-0.05204	0.2749	0.0146	-0.0116
105	SLO 15	0.01812	0.32025	-0.05204	-0.2746	0.0146	0.0117
105	SLO 16	0.01812	0.32025	-0.05204	-0.2746	0.0146	0.0117
105	SLD 1	-0.00054	-0.29594	-0.04411	0.254	0.017	-0.0108
105	SLD 2	-0.00054	-0.29594	-0.04411	0.254	0.017	-0.0108
105	SLD 3	-0.00054	0.29591	-0.04411	-0.2537	0.017	0.0108
105	SLD 4	-0.00054	0.29591	-0.04411	-0.2537	0.017	0.0108
105	SLD 5	0.00536	-0.98643	-0.04661	0.8464	0.0162	-0.0359
105	SLD 6	0.00536	-0.98643	-0.04661	0.8464	0.0162	-0.0359
105	SLD 7	0.00536	0.9864	-0.04661	-0.8461	0.0162	0.036
105	SLD 8	0.00536	0.9864	-0.04661	-0.8461	0.0162	0.036

Nodo	Cont.	Spostamento			Rotazione		
Ind.	N.br.	ux	uy	uz	rx	ry	rz
105	SLD 9	0.0104	-0.98643	-0.04876	0.8464	0.0156	-0.0359
105	SLD 10	0.0104	-0.98643	-0.04876	0.8464	0.0156	-0.0359
105	SLD 11	0.0104	0.9864	-0.04876	-0.8461	0.0156	0.036
105	SLD 12	0.0104	0.9864	-0.04876	-0.8461	0.0156	0.036
105	SLD 13	0.0163	-0.29594	-0.05126	0.254	0.0148	-0.0108
105	SLD 14	0.0163	-0.29594	-0.05126	0.254	0.0148	-0.0108
105	SLD 15	0.0163	0.29591	-0.05126	-0.2537	0.0148	0.0108
105	SLD 16	0.0163	0.29591	-0.05126	-0.2537	0.0148	0.0108
105	SLV 1	-0.01026	-0.78052	-0.03997	0.6698	0.0182	-0.0284
105	SLV 2	-0.01026	-0.78052	-0.03997	0.6698	0.0182	-0.0284
105	SLV 3	-0.01026	0.78049	-0.03997	-0.6695	0.0182	0.0285
105	SLV 4	-0.01026	0.78049	-0.03997	-0.6695	0.0182	0.0285
105	SLV 5	0.00244	-2.60169	-0.04537	2.2322	0.0166	-0.0947
105	SLV 6	0.00244	-2.60169	-0.04537	2.2322	0.0166	-0.0947
105	SLV 7	0.00244	2.60166	-0.04537	-2.2319	0.0166	0.0948
105	SLV 8	0.00244	2.60166	-0.04537	-2.2319	0.0166	0.0948
105	SLV 9	0.01332	-2.60169	-0.05	2.2322	0.0152	-0.0947
105	SLV 10	0.01332	-2.60169	-0.05	2.2322	0.0152	-0.0947
105	SLV 11	0.01332	2.60166	-0.05	-2.2319	0.0152	0.0948
105	SLV 12	0.01332	2.60166	-0.05	-2.2319	0.0152	0.0948
105	SLV 13	0.02601	-0.78052	-0.0554	0.6698	0.0135	-0.0284
105	SLV 14	0.02601	-0.78052	-0.0554	0.6698	0.0135	-0.0284
105	SLV 15	0.02601	0.78049	-0.05539	-0.6695	0.0135	0.0285
105	SLV 16	0.02601	0.78049	-0.05539	-0.6695	0.0135	0.0285
106	SLU 1	-0.00788	-0.00002	-0.04768	0.0002	-0.0159	0
106	SLU 2	-0.03089	-0.00002	-0.26137	0.0002	-0.0971	0
106	SLU 3	-0.031	0	-0.26246	0.0001	-0.0975	0
106	SLU 4	-0.00816	0.00001	-0.05042	0.0002	-0.017	0
106	SLU 5	-0.02542	0.00001	-0.21068	0.0001	-0.0779	0
106	SLU 6	-0.03147	-0.00002	-0.26588	0.0002	-0.0986	0
106	SLU 7	-0.03158	-0.00001	-0.26698	0.0002	-0.099	0
106	SLU 8	-0.00875	0.00001	-0.05493	0.0002	-0.0184	0
106	SLU 9	-0.026	0.00001	-0.2152	0.0001	-0.0793	0
106	SLU 10	-0.00905	-0.00002	-0.05671	0.0002	-0.0188	0
106	SLU 11	-0.0263	-0.00002	-0.21698	0.0002	-0.0797	0
106	SLU 12	-0.00916	-0.00001	-0.05781	0.0002	-0.0192	0
106	SLU 13	-0.02641	-0.00001	-0.21807	0.0002	-0.0801	0
106	SLU 14	-0.03121	-0.00015	-0.26357	0.0002	-0.0977	0
106	SLU 15	-0.03132	-0.00014	-0.26467	0.0002	-0.0981	0
106	SLU 16	-0.00848	-0.00013	-0.05263	0.0002	-0.0176	0
106	SLU 17	-0.02574	-0.00013	-0.21289	0.0002	-0.0785	0
106	SLU 18	-0.03179	-0.00016	-0.26809	0.0002	-0.0992	0
106	SLU 19	-0.0319	-0.00014	-0.26918	0.0002	-0.0996	0
106	SLU 20	-0.00907	-0.00013	-0.05714	0.0002	-0.019	0
106	SLU 21	-0.02632	-0.00013	-0.2174	0.0002	-0.0799	0
106	SLU 22	-0.00937	-0.00016	-0.05892	0.0002	-0.0194	0
106	SLU 23	-0.02662	-0.00016	-0.21918	0.0002	-0.0803	0
106	SLU 24	-0.00948	-0.00014	-0.06002	0.0002	-0.0198	0
106	SLU 25	-0.02673	-0.00014	-0.22028	0.0002	-0.0807	0
106	SLU 26	-0.00868	-0.00036	-0.0532	0.0003	-0.0174	0
106	SLU 27	-0.02594	-0.00036	-0.21347	0.0003	-0.0783	0
106	SLU 28	-0.00879	-0.00035	-0.0543	0.0003	-0.0178	0
106	SLU 29	-0.02605	-0.00035	-0.21456	0.0003	-0.0787	0
106	SLU 30	-0.00926	-0.00036	-0.05772	0.0003	-0.0188	0
106	SLU 31	-0.02652	-0.00036	-0.21798	0.0003	-0.0798	0
106	SLU 32	-0.00938	-0.00035	-0.05881	0.0003	-0.0193	0
106	SLU 33	-0.02663	-0.00035	-0.21907	0.0003	-0.0802	0
106	SLU 34	-0.00788	-0.00002	-0.04768	0.0002	-0.0159	0
106	SLU 35	-0.03089	-0.00002	-0.26137	0.0002	-0.0971	0
106	SLU 36	-0.031	0	-0.26246	0.0001	-0.0975	0
106	SLU 37	-0.00816	0.00001	-0.05042	0.0002	-0.017	0
106	SLU 38	-0.02542	0.00001	-0.21068	0.0001	-0.0779	0
106	SLU 39	-0.03147	-0.00002	-0.26588	0.0002	-0.0986	0
106	SLU 40	-0.03158	-0.00001	-0.26698	0.0002	-0.099	0
106	SLU 41	-0.00875	0.00001	-0.05493	0.0002	-0.0184	0
106	SLU 42	-0.026	0.00001	-0.2152	0.0001	-0.0793	0
106	SLU 43	-0.00905	-0.00002	-0.05671	0.0002	-0.0188	0
106	SLU 44	-0.0263	-0.00002	-0.21698	0.0002	-0.0797	0
106	SLU 45	-0.00916	-0.00001	-0.05781	0.0002	-0.0192	0
106	SLU 46	-0.02641	-0.00001	-0.21807	0.0002	-0.0801	0
106	SLU 47	-0.03121	-0.00015	-0.26357	0.0002	-0.0977	0
106	SLU 48	-0.03132	-0.00014	-0.26467	0.0002	-0.0981	0
106	SLU 49	-0.00848	-0.00013	-0.05263	0.0002	-0.0176	0
106	SLU 50	-0.02574	-0.00013	-0.21289	0.0002	-0.0785	0
106	SLU 51	-0.03179	-0.00016	-0.26809	0.0002	-0.0992	0
106	SLU 52	-0.0319	-0.00014	-0.26918	0.0002	-0.0996	0
106	SLU 53	-0.00907	-0.00013	-0.05714	0.0002	-0.019	0
106	SLU 54	-0.02632	-0.00013	-0.2174	0.0002	-0.0799	0
106	SLU 55	-0.00937	-0.00016	-0.05892	0.0002	-0.0194	0
106	SLU 56	-0.02662	-0.00016	-0.21918	0.0002	-0.0803	0
106	SLU 57	-0.00948	-0.00014	-0.06002	0.0002	-0.0198	0
106	SLU 58	-0.02673	-0.00014	-0.22028	0.0002	-0.0807	0
106	SLU 59	-0.00868	-0.00036	-0.0532	0.0003	-0.0174	0
106	SLU 60	-0.02594	-0.00036	-0.21347	0.0003	-0.0783	0
106	SLU 61	-0.00879	-0.00035	-0.0543	0.0003	-0.0178	0
106	SLU 62	-0.02605	-0.00035	-0.21456	0.0003	-0.0787	0
106	SLU 63	-0.00926	-0.00036	-0.05772	0.0003	-0.0188	0
106	SLU 64	-0.02652	-0.00036	-0.21798	0.0003	-0.0798	0
106	SLU 65	-0.00938	-0.00035	-0.05881	0.0003	-0.0193	0
106	SLU 66	-0.02663	-0.00035	-0.21907	0.0003	-0.0802	0
106	SLU 67	-0.01024	-0.00002	-0.06199	0.0002	-0.0207	0
106	SLU 68	-0.03325	-0.00002	-0.27567	0.0002	-0.1019	0
106	SLU 69	-0.03336	-0.00001	-0.27677	0.0002	-0.1023	0
106	SLU 70	-0.01053	0.00001	-0.06473	0.0002	-0.0217	0
106	SLU 71	-0.02778	0.00001	-0.22499	0.0002	-0.0826	0

Nodo	Cont.	Spostamento			Rotazione		
Ind.	N.br.	ux	uy	uz	rx	ry	rz
106	SLU 72	-0.03383	-0.00002	-0.28019	0.0002	-0.1033	0
106	SLU 73	-0.03395	-0.00001	-0.28128	0.0002	-0.1037	0
106	SLU 74	-0.01111	0.00001	-0.06924	0.0002	-0.0232	0
106	SLU 75	-0.02836	0.00001	-0.2295	0.0002	-0.0841	0
106	SLU 76	-0.01141	-0.00002	-0.07102	0.0002	-0.0235	0
106	SLU 77	-0.02866	-0.00002	-0.23128	0.0002	-0.0845	0
106	SLU 78	-0.01152	-0.00001	-0.07211	0.0002	-0.024	0
106	SLU 79	-0.02878	-0.00001	-0.23237	0.0002	-0.0849	0
106	SLU 80	-0.03357	-0.00016	-0.27788	0.0003	-0.1025	0
106	SLU 81	-0.03368	-0.00015	-0.27897	0.0003	-0.1029	0
106	SLU 82	-0.01085	-0.00013	-0.06693	0.0003	-0.0223	0
106	SLU 83	-0.0281	-0.00013	-0.22719	0.0003	-0.0832	0
106	SLU 84	-0.03415	-0.00016	-0.28239	0.0003	-0.1039	0
106	SLU 85	-0.03427	-0.00015	-0.28349	0.0003	-0.1043	0
106	SLU 86	-0.01143	-0.00013	-0.07145	0.0003	-0.0238	0
106	SLU 87	-0.02869	-0.00013	-0.23171	0.0003	-0.0847	0
106	SLU 88	-0.01173	-0.00016	-0.07323	0.0003	-0.0241	0
106	SLU 89	-0.02899	-0.00016	-0.23349	0.0003	-0.0851	0
106	SLU 90	-0.01184	-0.00015	-0.07432	0.0003	-0.0246	0
106	SLU 91	-0.0291	-0.00015	-0.23458	0.0003	-0.0855	0
106	SLU 92	-0.01105	-0.00037	-0.06751	0.0004	-0.0222	0
106	SLU 93	-0.0283	-0.00037	-0.22777	0.0004	-0.0831	0
106	SLU 94	-0.01116	-0.00036	-0.0686	0.0004	-0.0226	0
106	SLU 95	-0.02841	-0.00036	-0.22886	0.0004	-0.0835	0
106	SLU 96	-0.01163	-0.00037	-0.07202	0.0004	-0.0236	0
106	SLU 97	-0.02888	-0.00037	-0.23229	0.0004	-0.0845	0
106	SLU 98	-0.01174	-0.00036	-0.07312	0.0004	-0.024	0
106	SLU 99	-0.029	-0.00036	-0.23338	0.0004	-0.0849	0
106	SLU 100	-0.01024	-0.00002	-0.06199	0.0002	-0.0207	0
106	SLU 101	-0.03325	-0.00002	-0.27567	0.0002	-0.1019	0
106	SLU 102	-0.03336	-0.00001	-0.27677	0.0002	-0.1023	0
106	SLU 103	-0.01053	0.00001	-0.06473	0.0002	-0.0217	0
106	SLU 104	-0.02778	0.00001	-0.22499	0.0002	-0.0826	0
106	SLU 105	-0.03383	-0.00002	-0.28019	0.0002	-0.1033	0
106	SLU 106	-0.03395	-0.00001	-0.28128	0.0002	-0.1037	0
106	SLU 107	-0.01111	0.00001	-0.06924	0.0002	-0.0232	0
106	SLU 108	-0.02836	0.00001	-0.2295	0.0002	-0.0841	0
106	SLU 109	-0.01141	-0.00002	-0.07102	0.0002	-0.0235	0
106	SLU 110	-0.02866	-0.00002	-0.23128	0.0002	-0.0845	0
106	SLU 111	-0.01152	-0.00001	-0.07211	0.0002	-0.024	0
106	SLU 112	-0.02878	-0.00001	-0.23237	0.0002	-0.0849	0
106	SLU 113	-0.03357	-0.00016	-0.27788	0.0003	-0.1025	0
106	SLU 114	-0.03368	-0.00015	-0.27897	0.0003	-0.1029	0
106	SLU 115	-0.01085	-0.00013	-0.06693	0.0003	-0.0223	0
106	SLU 116	-0.0281	-0.00013	-0.22719	0.0003	-0.0832	0
106	SLU 117	-0.03415	-0.00016	-0.28239	0.0003	-0.1039	0
106	SLU 118	-0.03427	-0.00015	-0.28349	0.0003	-0.1043	0
106	SLU 119	-0.01143	-0.00013	-0.07145	0.0003	-0.0238	0
106	SLU 120	-0.02869	-0.00013	-0.23171	0.0003	-0.0847	0
106	SLU 121	-0.01173	-0.00016	-0.07323	0.0003	-0.0241	0
106	SLU 122	-0.02899	-0.00016	-0.23349	0.0003	-0.0851	0
106	SLU 123	-0.01184	-0.00015	-0.07432	0.0003	-0.0246	0
106	SLU 124	-0.0291	-0.00015	-0.23458	0.0003	-0.0855	0
106	SLU 125	-0.01105	-0.00037	-0.06751	0.0004	-0.0222	0
106	SLU 126	-0.0283	-0.00037	-0.22777	0.0004	-0.0831	0
106	SLU 127	-0.01116	-0.00036	-0.0686	0.0004	-0.0226	0
106	SLU 128	-0.02841	-0.00036	-0.22886	0.0004	-0.0835	0
106	SLU 129	-0.01163	-0.00037	-0.07202	0.0004	-0.0236	0
106	SLU 130	-0.02888	-0.00037	-0.23229	0.0004	-0.0845	0
106	SLU 131	-0.01174	-0.00036	-0.07312	0.0004	-0.024	0
106	SLU 132	-0.029	-0.00036	-0.23338	0.0004	-0.0849	0
106	SLE RA 1	-0.00788	-0.00002	-0.04768	0.0002	-0.0159	0
106	SLE RA 2	-0.02322	-0.00002	-0.19014	0.0002	-0.07	0
106	SLE RA 3	-0.02329	-0.00001	-0.19087	0.0002	-0.0703	0
106	SLE RA 4	-0.00807	0	-0.04951	0.0002	-0.0166	0
106	SLE RA 5	-0.01957	0	-0.15635	0.0001	-0.0572	0
106	SLE RA 6	-0.02361	-0.00002	-0.19315	0.0002	-0.071	0
106	SLE RA 7	-0.02368	-0.00001	-0.19388	0.0002	-0.0713	0
106	SLE RA 8	-0.00846	0	-0.05252	0.0002	-0.0176	0
106	SLE RA 9	-0.01996	0	-0.15936	0.0002	-0.0582	0
106	SLE RA 10	-0.00866	-0.00002	-0.0537	0.0002	-0.0178	0
106	SLE RA 11	-0.02016	-0.00002	-0.16055	0.0002	-0.0584	0
106	SLE RA 12	-0.00873	-0.00001	-0.05443	0.0002	-0.0181	0
106	SLE RA 13	-0.02024	-0.00001	-0.16127	0.0002	-0.0587	0
106	SLE RA 14	-0.02343	-0.00011	-0.19161	0.0002	-0.0704	0
106	SLE RA 15	-0.02351	-0.0001	-0.19234	0.0002	-0.0707	0
106	SLE RA 16	-0.00828	-0.00009	-0.05098	0.0002	-0.017	0
106	SLE RA 17	-0.01979	-0.00009	-0.15782	0.0002	-0.0576	0
106	SLE RA 18	-0.02382	-0.00011	-0.19462	0.0002	-0.0714	0
106	SLE RA 19	-0.0239	-0.0001	-0.19535	0.0002	-0.0717	0
106	SLE RA 20	-0.00867	-0.00009	-0.05399	0.0002	-0.018	0
106	SLE RA 21	-0.02017	-0.00009	-0.16083	0.0002	-0.0586	0
106	SLE RA 22	-0.00887	-0.00011	-0.05518	0.0002	-0.0182	0
106	SLE RA 23	-0.02037	-0.00011	-0.16202	0.0002	-0.0588	0
106	SLE RA 24	-0.00895	-0.0001	-0.05591	0.0002	-0.0185	0
106	SLE RA 25	-0.02045	-0.0001	-0.16275	0.0002	-0.0591	0
106	SLE RA 26	-0.00841	-0.00025	-0.05136	0.0003	-0.0169	0
106	SLE RA 27	-0.01992	-0.00025	-0.15821	0.0003	-0.0575	0
106	SLE RA 28	-0.00849	-0.00024	-0.05209	0.0003	-0.0172	0
106	SLE RA 29	-0.01999	-0.00024	-0.15893	0.0003	-0.0578	0
106	SLE RA 30	-0.0088	-0.00025	-0.05437	0.0003	-0.0179	0
106	SLE RA 31	-0.02031	-0.00025	-0.16121	0.0003	-0.0585	0
106	SLE RA 32	-0.00888	-0.00024	-0.0551	0.0003	-0.0181	0
106	SLE RA 33	-0.02038	-0.00024	-0.16194	0.0003	-0.0587	0
106	SLE FR 1	-0.00788	-0.00002	-0.04768	0.0002	-0.0159	0

Nodo	Cont.	Spostamento			Rotazione		
Ind.	N.br.	ux	uy	uz	rx	ry	rz
106	SLE FR 2	-0.01938	-0.00002	-0.15453	0.0002	-0.0565	0
106	SLE FR 3	-0.00796	-0.00001	-0.04841	0.0002	-0.0162	0
106	SLE FR 4	-0.00804	-0.00002	-0.04889	0.0002	-0.0163	0
106	SLE FR 5	-0.00809	-0.00011	-0.04916	0.0002	-0.0163	0
106	SLE QP 1	-0.00788	-0.00002	-0.04768	0.0002	-0.0159	0
106	SLO 1	-0.01812	-0.32028	-0.05204	0.2749	-0.0146	0.0116
106	SLO 2	-0.01812	-0.32028	-0.05204	0.2749	-0.0146	0.0116
106	SLO 3	-0.01812	0.32025	-0.05204	-0.2746	-0.0146	-0.0117
106	SLO 4	-0.01812	0.32025	-0.05204	-0.2746	-0.0146	-0.0117
106	SLO 5	-0.01095	-1.06758	-0.04899	0.9161	-0.0155	0.0389
106	SLO 6	-0.01095	-1.06758	-0.04899	0.9161	-0.0155	0.0389
106	SLO 7	-0.01095	1.06755	-0.04899	-0.9157	-0.0155	-0.0389
106	SLO 8	-0.01095	1.06755	-0.04899	-0.9157	-0.0155	-0.0389
106	SLO 9	-0.00481	-1.06758	-0.04638	0.9161	-0.0163	0.0389
106	SLO 10	-0.00481	-1.06758	-0.04638	0.9161	-0.0163	0.0389
106	SLO 11	-0.00481	1.06755	-0.04638	-0.9157	-0.0163	-0.0389
106	SLO 12	-0.00481	1.06755	-0.04638	-0.9157	-0.0163	-0.0389
106	SLO 13	0.00236	-0.32028	-0.04333	0.2749	-0.0172	0.0116
106	SLO 14	0.00236	-0.32028	-0.04333	0.2749	-0.0172	0.0116
106	SLO 15	0.00236	0.32025	-0.04333	-0.2746	-0.0172	-0.0117
106	SLO 16	0.00236	0.32025	-0.04333	-0.2746	-0.0172	-0.0117
106	SLD 1	-0.0163	-0.29594	-0.05126	0.254	-0.0148	0.0108
106	SLD 2	-0.0163	-0.29594	-0.05126	0.254	-0.0148	0.0108
106	SLD 3	-0.0163	0.29591	-0.05126	-0.2537	-0.0148	-0.0108
106	SLD 4	-0.0163	0.29591	-0.05126	-0.2537	-0.0148	-0.0108
106	SLD 5	-0.0104	-0.98643	-0.04876	0.8464	-0.0156	0.0359
106	SLD 6	-0.0104	-0.98643	-0.04876	0.8464	-0.0156	0.0359
106	SLD 7	-0.0104	0.9864	-0.04876	-0.8461	-0.0156	-0.036
106	SLD 8	-0.0104	0.9864	-0.04876	-0.8461	-0.0156	-0.036
106	SLD 9	-0.00536	-0.98643	-0.04661	0.8464	-0.0162	0.0359
106	SLD 10	-0.00536	-0.98643	-0.04661	0.8464	-0.0162	0.0359
106	SLD 11	-0.00536	0.9864	-0.04661	-0.8461	-0.0162	-0.036
106	SLD 12	-0.00536	0.9864	-0.04661	-0.8461	-0.0162	-0.036
106	SLD 13	0.00054	-0.29594	-0.04411	0.254	-0.017	0.0108
106	SLD 14	0.00054	-0.29594	-0.04411	0.254	-0.017	0.0108
106	SLD 15	0.00054	0.29591	-0.04411	-0.2537	-0.017	-0.0108
106	SLD 16	0.00054	0.29591	-0.04411	-0.2537	-0.017	-0.0108
106	SLV 1	-0.02601	-0.78052	-0.0554	0.6698	-0.0135	0.0284
106	SLV 2	-0.02601	-0.78052	-0.0554	0.6698	-0.0135	0.0284
106	SLV 3	-0.02601	0.78049	-0.05539	-0.6695	-0.0135	-0.0285
106	SLV 4	-0.02601	0.78049	-0.05539	-0.6695	-0.0135	-0.0285
106	SLV 5	-0.01332	-2.60169	-0.05	2.2322	-0.0152	0.0947
106	SLV 6	-0.01332	-2.60169	-0.05	2.2322	-0.0152	0.0947
106	SLV 7	-0.01332	2.60166	-0.05	-2.2319	-0.0152	-0.0948
106	SLV 8	-0.01332	2.60166	-0.05	-2.2319	-0.0152	-0.0948
106	SLV 9	-0.00244	-2.60169	-0.04537	2.2322	-0.0166	0.0947
106	SLV 10	-0.00244	-2.60169	-0.04537	2.2322	-0.0166	0.0947
106	SLV 11	-0.00244	2.60166	-0.04537	-2.2319	-0.0166	-0.0948
106	SLV 12	-0.00244	2.60166	-0.04537	-2.2319	-0.0166	-0.0948
106	SLV 13	0.01026	-0.78052	-0.03997	0.6698	-0.0182	0.0284
106	SLV 14	0.01026	-0.78052	-0.03997	0.6698	-0.0182	0.0284
106	SLV 15	0.01026	0.78049	-0.03997	-0.6695	-0.0182	-0.0285
106	SLV 16	0.01026	0.78049	-0.03997	-0.6695	-0.0182	-0.0285
107	SLU 1	-0.00542	-0.00003	-0.11973	0.0003	0.1121	0.0001
107	SLU 2	-0.00542	-0.00003	-0.11974	0.0003	0.1121	0.0001
107	SLU 3	-0.00635	-0.00002	-0.12608	0.0003	0.1191	0.0001
107	SLU 4	-0.00773	0	-0.13558	0.0003	0.1297	0.0001
107	SLU 5	-0.00773	0	-0.13559	0.0003	0.1298	0.0001
107	SLU 6	-0.00637	-0.00003	-0.13223	0.0003	0.1241	0.0001
107	SLU 7	-0.00729	-0.00002	-0.13857	0.0003	0.1312	0.0001
107	SLU 8	-0.00868	0	-0.14807	0.0003	0.1418	0.0001
107	SLU 9	-0.00868	0	-0.14808	0.0003	0.1418	0.0001
107	SLU 10	-0.00732	-0.00003	-0.14471	0.0003	0.1362	0.0001
107	SLU 11	-0.00732	-0.00003	-0.14472	0.0003	0.1362	0.0001
107	SLU 12	-0.00824	-0.00002	-0.15105	0.0003	0.1432	0.0001
107	SLU 13	-0.00824	-0.00002	-0.15106	0.0003	0.1432	0.0001
107	SLU 14	-0.00569	-0.00017	-0.1316	0.0004	0.1222	0.0001
107	SLU 15	-0.00662	-0.00016	-0.13794	0.0003	0.1292	0.0001
107	SLU 16	-0.00801	-0.00014	-0.14744	0.0004	0.1398	0.0001
107	SLU 17	-0.00801	-0.00014	-0.14745	0.0003	0.1398	0.0001
107	SLU 18	-0.00664	-0.00017	-0.14409	0.0004	0.1342	0.0001
107	SLU 19	-0.00757	-0.00016	-0.15043	0.0004	0.1413	0.0001
107	SLU 20	-0.00896	-0.00014	-0.15993	0.0004	0.1519	0.0001
107	SLU 21	-0.00896	-0.00014	-0.15994	0.0004	0.1519	0.0001
107	SLU 22	-0.00759	-0.00017	-0.15657	0.0004	0.1462	0.0001
107	SLU 23	-0.00759	-0.00017	-0.15658	0.0004	0.1463	0.0001
107	SLU 24	-0.00851	-0.00016	-0.16291	0.0004	0.1533	0.0001
107	SLU 25	-0.00851	-0.00016	-0.16292	0.0004	0.1533	0.0001
107	SLU 26	-0.0061	-0.00038	-0.14938	0.0005	0.1373	0.0001
107	SLU 27	-0.0061	-0.00038	-0.14939	0.0005	0.1373	0.0001
107	SLU 28	-0.00703	-0.00037	-0.15572	0.0005	0.1443	0.0001
107	SLU 29	-0.00703	-0.00037	-0.15573	0.0005	0.1444	0.0001
107	SLU 30	-0.00705	-0.00038	-0.16187	0.0005	0.1493	0.0001
107	SLU 31	-0.00705	-0.00038	-0.16188	0.0005	0.1493	0.0001
107	SLU 32	-0.00798	-0.00037	-0.16821	0.0005	0.1564	0.0001
107	SLU 33	-0.00798	-0.00037	-0.16822	0.0005	0.1564	0.0001
107	SLU 34	-0.00542	-0.00003	-0.11973	0.0003	0.1121	0.0001
107	SLU 35	-0.00542	-0.00003	-0.11974	0.0003	0.1121	0.0001
107	SLU 36	-0.00635	-0.00002	-0.12608	0.0003	0.1191	0.0001
107	SLU 37	-0.00773	0	-0.13558	0.0003	0.1297	0.0001
107	SLU 38	-0.00773	0	-0.13559	0.0003	0.1298	0.0001
107	SLU 39	-0.00637	-0.00003	-0.13223	0.0003	0.1241	0.0001
107	SLU 40	-0.00729	-0.00002	-0.13857	0.0003	0.1312	0.0001
107	SLU 41	-0.00868	0	-0.14807	0.0003	0.1418	0.0001
107	SLU 42	-0.00868	0	-0.14808	0.0003	0.1418	0.0001

Nodo	Cont.	Spostamento			Rotazione		
Ind.	N.br.	ux	uy	uz	rx	ry	rz
107	SLU 43	-0.00732	-0.00003	-0.14471	0.0003	0.1362	0.0001
107	SLU 44	-0.00732	-0.00003	-0.14472	0.0003	0.1362	0.0001
107	SLU 45	-0.00824	-0.00002	-0.15105	0.0003	0.1432	0.0001
107	SLU 46	-0.00824	-0.00002	-0.15106	0.0003	0.1432	0.0001
107	SLU 47	-0.00569	-0.00017	-0.1316	0.0004	0.1222	0.0001
107	SLU 48	-0.00662	-0.00016	-0.13794	0.0003	0.1292	0.0001
107	SLU 49	-0.00801	-0.00014	-0.14744	0.0004	0.1398	0.0001
107	SLU 50	-0.00801	-0.00014	-0.14745	0.0003	0.1398	0.0001
107	SLU 51	-0.00664	-0.00017	-0.14409	0.0004	0.1342	0.0001
107	SLU 52	-0.00757	-0.00016	-0.15043	0.0004	0.1413	0.0001
107	SLU 53	-0.00896	-0.00014	-0.15993	0.0004	0.1519	0.0001
107	SLU 54	-0.00896	-0.00014	-0.15994	0.0004	0.1519	0.0001
107	SLU 55	-0.00759	-0.00017	-0.15657	0.0004	0.1462	0.0001
107	SLU 56	-0.00759	-0.00017	-0.15658	0.0004	0.1463	0.0001
107	SLU 57	-0.00851	-0.00016	-0.16291	0.0004	0.1533	0.0001
107	SLU 58	-0.00851	-0.00016	-0.16292	0.0004	0.1533	0.0001
107	SLU 59	-0.0061	-0.00038	-0.14938	0.0005	0.1373	0.0001
107	SLU 60	-0.0061	-0.00038	-0.14939	0.0005	0.1373	0.0001
107	SLU 61	-0.00703	-0.00037	-0.15572	0.0005	0.1443	0.0001
107	SLU 62	-0.00703	-0.00037	-0.15573	0.0005	0.1444	0.0001
107	SLU 63	-0.00705	-0.00038	-0.16187	0.0005	0.1493	0.0001
107	SLU 64	-0.00705	-0.00038	-0.16188	0.0005	0.1493	0.0001
107	SLU 65	-0.00798	-0.00037	-0.16821	0.0005	0.1564	0.0001
107	SLU 66	-0.00798	-0.00037	-0.16822	0.0005	0.1564	0.0001
107	SLU 67	-0.00705	-0.00004	-0.15565	0.0004	0.1457	0.0001
107	SLU 68	-0.00705	-0.00004	-0.15566	0.0004	0.1457	0.0001
107	SLU 69	-0.00797	-0.00003	-0.162	0.0004	0.1528	0.0001
107	SLU 70	-0.00936	-0.00001	-0.1715	0.0004	0.1634	0.0001
107	SLU 71	-0.00936	-0.00001	-0.17151	0.0004	0.1634	0.0001
107	SLU 72	-0.00799	-0.00004	-0.16815	0.0004	0.1577	0.0001
107	SLU 73	-0.00892	-0.00003	-0.17449	0.0004	0.1648	0.0001
107	SLU 74	-0.01031	-0.00001	-0.18399	0.0004	0.1754	0.0001
107	SLU 75	-0.01031	-0.00001	-0.184	0.0004	0.1754	0.0001
107	SLU 76	-0.00894	-0.00004	-0.18063	0.0004	0.1698	0.0001
107	SLU 77	-0.00894	-0.00004	-0.18064	0.0004	0.1698	0.0001
107	SLU 78	-0.00987	-0.00003	-0.18697	0.0004	0.1768	0.0001
107	SLU 79	-0.00987	-0.00003	-0.18698	0.0004	0.1769	0.0001
107	SLU 80	-0.00732	-0.00018	-0.16752	0.0004	0.1558	0.0001
107	SLU 81	-0.00825	-0.00017	-0.17386	0.0004	0.1629	0.0001
107	SLU 82	-0.00963	-0.00015	-0.18336	0.0004	0.1734	0.0001
107	SLU 83	-0.00963	-0.00015	-0.18337	0.0004	0.1735	0.0001
107	SLU 84	-0.00827	-0.00018	-0.18001	0.0004	0.1678	0.0001
107	SLU 85	-0.00919	-0.00017	-0.18635	0.0004	0.1749	0.0001
107	SLU 86	-0.01058	-0.00015	-0.19585	0.0005	0.1855	0.0001
107	SLU 87	-0.01058	-0.00015	-0.19586	0.0004	0.1855	0.0001
107	SLU 88	-0.00922	-0.00018	-0.19249	0.0005	0.1799	0.0001
107	SLU 89	-0.00922	-0.00018	-0.1925	0.0005	0.1799	0.0001
107	SLU 90	-0.01014	-0.00017	-0.19883	0.0005	0.1869	0.0001
107	SLU 91	-0.01014	-0.00017	-0.19884	0.0005	0.1869	0.0001
107	SLU 92	-0.00773	-0.00039	-0.1853	0.0006	0.1709	0.0001
107	SLU 93	-0.00773	-0.00039	-0.18531	0.0006	0.1709	0.0001
107	SLU 94	-0.00865	-0.00037	-0.19164	0.0006	0.178	0.0001
107	SLU 95	-0.00865	-0.00037	-0.19165	0.0006	0.178	0.0001
107	SLU 96	-0.00868	-0.00039	-0.19778	0.0006	0.1829	0.0001
107	SLU 97	-0.00868	-0.00039	-0.19779	0.0006	0.183	0.0001
107	SLU 98	-0.0096	-0.00037	-0.20413	0.0006	0.19	0.0001
107	SLU 99	-0.0096	-0.00038	-0.20414	0.0006	0.19	0.0001
107	SLU 100	-0.00705	-0.00004	-0.15565	0.0004	0.1457	0.0001
107	SLU 101	-0.00705	-0.00004	-0.15566	0.0004	0.1457	0.0001
107	SLU 102	-0.00797	-0.00003	-0.162	0.0004	0.1528	0.0001
107	SLU 103	-0.00936	-0.00001	-0.1715	0.0004	0.1634	0.0001
107	SLU 104	-0.00936	-0.00001	-0.17151	0.0004	0.1634	0.0001
107	SLU 105	-0.00799	-0.00004	-0.16815	0.0004	0.1577	0.0001
107	SLU 106	-0.00892	-0.00003	-0.17449	0.0004	0.1648	0.0001
107	SLU 107	-0.01031	-0.00001	-0.18399	0.0004	0.1754	0.0001
107	SLU 108	-0.01031	-0.00001	-0.184	0.0004	0.1754	0.0001
107	SLU 109	-0.00894	-0.00004	-0.18063	0.0004	0.1698	0.0001
107	SLU 110	-0.00894	-0.00004	-0.18064	0.0004	0.1698	0.0001
107	SLU 111	-0.00987	-0.00003	-0.18697	0.0004	0.1768	0.0001
107	SLU 112	-0.00987	-0.00003	-0.18698	0.0004	0.1769	0.0001
107	SLU 113	-0.00732	-0.00018	-0.16752	0.0004	0.1558	0.0001
107	SLU 114	-0.00825	-0.00017	-0.17386	0.0004	0.1629	0.0001
107	SLU 115	-0.00963	-0.00015	-0.18336	0.0004	0.1734	0.0001
107	SLU 116	-0.00963	-0.00015	-0.18337	0.0004	0.1735	0.0001
107	SLU 117	-0.00827	-0.00018	-0.18001	0.0004	0.1678	0.0001
107	SLU 118	-0.00919	-0.00017	-0.18635	0.0004	0.1749	0.0001
107	SLU 119	-0.01058	-0.00015	-0.19585	0.0005	0.1855	0.0001
107	SLU 120	-0.01058	-0.00015	-0.19586	0.0004	0.1855	0.0001
107	SLU 121	-0.00922	-0.00018	-0.19249	0.0005	0.1799	0.0001
107	SLU 122	-0.00922	-0.00018	-0.1925	0.0005	0.1799	0.0001
107	SLU 123	-0.01014	-0.00017	-0.19883	0.0005	0.1869	0.0001
107	SLU 124	-0.01014	-0.00017	-0.19884	0.0005	0.1869	0.0001
107	SLU 125	-0.00773	-0.00039	-0.1853	0.0006	0.1709	0.0001
107	SLU 126	-0.00773	-0.00039	-0.18531	0.0006	0.1709	0.0001
107	SLU 127	-0.00865	-0.00037	-0.19164	0.0006	0.178	0.0001
107	SLU 128	-0.00865	-0.00037	-0.19165	0.0006	0.178	0.0001
107	SLU 129	-0.00868	-0.00039	-0.19778	0.0006	0.1829	0.0001
107	SLU 130	-0.00868	-0.00039	-0.19779	0.0006	0.183	0.0001
107	SLU 131	-0.0096	-0.00037	-0.20413	0.0006	0.19	0.0001
107	SLU 132	-0.0096	-0.00038	-0.20414	0.0006	0.19	0.0001
107	SLE RA 1	-0.00542	-0.00003	-0.11973	0.0003	0.1121	0.0001
107	SLE RA 2	-0.00542	-0.00003	-0.11974	0.0003	0.1121	0.0001
107	SLE RA 3	-0.00604	-0.00002	-0.12397	0.0003	0.1168	0.0001
107	SLE RA 4	-0.00696	-0.00001	-0.1303	0.0003	0.1238	0.0001
107	SLE RA 5	-0.00696	-0.00001	-0.13031	0.0003	0.1239	0.0001

Nodo	Cont.	Spostamento			Rotazione		
Ind.	N.br.	ux	uy	uz	rx	ry	rz
107	SLE RA 6	-0.00605	-0.00003	-0.12806	0.0003	0.1201	0.0001
107	SLE RA 7	-0.00667	-0.00002	-0.13229	0.0003	0.1248	0.0001
107	SLE RA 8	-0.0076	-0.00001	-0.13863	0.0003	0.1319	0.0001
107	SLE RA 9	-0.0076	-0.00001	-0.13863	0.0003	0.1319	0.0001
107	SLE RA 10	-0.00668	-0.00003	-0.13638	0.0003	0.1281	0.0001
107	SLE RA 11	-0.00668	-0.00003	-0.13639	0.0003	0.1281	0.0001
107	SLE RA 12	-0.0073	-0.00002	-0.14061	0.0003	0.1328	0.0001
107	SLE RA 13	-0.0073	-0.00002	-0.14062	0.0003	0.1328	0.0001
107	SLE RA 14	-0.0056	-0.00012	-0.12764	0.0003	0.1188	0.0001
107	SLE RA 15	-0.00622	-0.00011	-0.13187	0.0003	0.1235	0.0001
107	SLE RA 16	-0.00715	-0.0001	-0.1382	0.0003	0.1306	0.0001
107	SLE RA 17	-0.00715	-0.0001	-0.13821	0.0003	0.1306	0.0001
107	SLE RA 18	-0.00623	-0.00012	-0.13597	0.0003	0.1268	0.0001
107	SLE RA 19	-0.00685	-0.00011	-0.1402	0.0003	0.1315	0.0001
107	SLE RA 20	-0.00778	-0.0001	-0.14653	0.0003	0.1386	0.0001
107	SLE RA 21	-0.00778	-0.0001	-0.14654	0.0003	0.1386	0.0001
107	SLE RA 22	-0.00687	-0.00012	-0.14429	0.0003	0.1348	0.0001
107	SLE RA 23	-0.00687	-0.00012	-0.14429	0.0003	0.1349	0.0001
107	SLE RA 24	-0.00748	-0.00011	-0.14852	0.0003	0.1396	0.0001
107	SLE RA 25	-0.00748	-0.00012	-0.14852	0.0003	0.1396	0.0001
107	SLE RA 26	-0.00587	-0.00026	-0.13949	0.0004	0.1289	0.0001
107	SLE RA 27	-0.00587	-0.00026	-0.1395	0.0004	0.1289	0.0001
107	SLE RA 28	-0.00649	-0.00025	-0.14372	0.0004	0.1336	0.0001
107	SLE RA 29	-0.00649	-0.00025	-0.14373	0.0004	0.1336	0.0001
107	SLE RA 30	-0.00651	-0.00026	-0.14782	0.0004	0.1369	0.0001
107	SLE RA 31	-0.00651	-0.00026	-0.14783	0.0004	0.1369	0.0001
107	SLE RA 32	-0.00712	-0.00025	-0.15205	0.0004	0.1416	0.0001
107	SLE RA 33	-0.00712	-0.00025	-0.15205	0.0004	0.1416	0.0001
107	SLE FR 1	-0.00542	-0.00003	-0.11973	0.0003	0.1121	0.0001
107	SLE FR 2	-0.00542	-0.00003	-0.11974	0.0003	0.1121	0.0001
107	SLE FR 3	-0.00604	-0.00002	-0.12396	0.0003	0.1168	0.0001
107	SLE FR 4	-0.00567	-0.00003	-0.12306	0.0003	0.1153	0.0001
107	SLE FR 5	-0.0056	-0.00012	-0.12764	0.0003	0.1188	0.0001
107	SLE QP 1	-0.00542	-0.00003	-0.11973	0.0003	0.1121	0.0001
107	SLO 1	-0.1465	-0.32025	-0.02041	0.2828	0.1175	-0.0083
107	SLO 2	-0.1465	-0.32025	-0.02041	0.2828	0.1175	-0.0083
107	SLO 3	-0.1465	0.32019	-0.02041	-0.2822	0.1175	0.0084
107	SLO 4	-0.1465	0.32019	-0.02041	-0.2822	0.1175	0.0084
107	SLO 5	-0.04774	-1.06742	-0.08993	0.9419	0.1137	-0.0277
107	SLO 6	-0.04774	-1.06742	-0.08993	0.9419	0.1137	-0.0277
107	SLO 7	-0.04774	1.06736	-0.08993	-0.9413	0.1137	0.0278
107	SLO 8	-0.04774	1.06736	-0.08993	-0.9413	0.1137	0.0278
107	SLO 9	0.0369	-1.06742	-0.14952	0.9419	0.1104	-0.0277
107	SLO 10	0.0369	-1.06742	-0.14952	0.9419	0.1104	-0.0277
107	SLO 11	0.0369	1.06736	-0.14952	-0.9413	0.1104	0.0278
107	SLO 12	0.0369	1.06736	-0.14952	-0.9413	0.1104	0.0278
107	SLO 13	0.13566	-0.32025	-0.21904	0.2828	0.1066	-0.0083
107	SLO 14	0.13566	-0.32025	-0.21904	0.2828	0.1066	-0.0083
107	SLO 15	0.13566	0.32019	-0.21904	-0.2822	0.1066	0.0084
107	SLO 16	0.13566	0.32019	-0.21904	-0.2822	0.1066	0.0084
107	SLD 1	-0.12118	-0.2959	-0.03824	0.2613	0.1165	-0.0076
107	SLD 2	-0.12118	-0.2959	-0.03824	0.2613	0.1165	-0.0076
107	SLD 3	-0.12118	0.29585	-0.03824	-0.2607	0.1165	0.0077
107	SLD 4	-0.12118	0.29585	-0.03824	-0.2607	0.1165	0.0077
107	SLD 5	-0.04015	-0.98628	-0.09528	0.8703	0.1134	-0.0256
107	SLD 6	-0.04015	-0.98628	-0.09528	0.8703	0.1134	-0.0256
107	SLD 7	-0.04015	0.98623	-0.09528	-0.8697	0.1134	0.0257
107	SLD 8	-0.04015	0.98623	-0.09528	-0.8697	0.1134	0.0257
107	SLD 9	0.02931	-0.98628	-0.14418	0.8703	0.1107	-0.0256
107	SLD 10	0.02931	-0.98628	-0.14418	0.8703	0.1107	-0.0256
107	SLD 11	0.02931	0.98623	-0.14418	-0.8697	0.1107	0.0257
107	SLD 12	0.02931	0.98623	-0.14418	-0.8697	0.1107	0.0257
107	SLD 13	0.11034	-0.2959	-0.20122	0.2613	0.1076	-0.0076
107	SLD 14	0.11034	-0.2959	-0.20122	0.2613	0.1076	-0.0076
107	SLD 15	0.11034	0.29585	-0.20122	-0.2607	0.1076	0.0077
107	SLD 16	0.11034	0.29585	-0.20122	-0.2607	0.1076	0.0077
107	SLV 1	-0.26403	-0.78041	0.06232	0.6887	0.122	-0.0202
107	SLV 2	-0.26403	-0.78041	0.06232	0.6887	0.122	-0.0202
107	SLV 3	-0.26403	0.78035	0.06232	-0.6881	0.122	0.0203
107	SLV 4	-0.26403	0.78035	0.06232	-0.6881	0.122	0.0203
107	SLV 5	-0.083	-2.60129	-0.06511	2.2949	0.115	-0.0675
107	SLV 6	-0.083	-2.60129	-0.06511	2.2949	0.115	-0.0675
107	SLV 7	-0.083	2.60123	-0.06511	-2.2944	0.115	0.0676
107	SLV 8	-0.083	2.60123	-0.06511	-2.2944	0.115	0.0676
107	SLV 9	0.07216	-2.60129	-0.17434	2.2949	0.1091	-0.0675
107	SLV 10	0.07216	-2.60129	-0.17434	2.2949	0.1091	-0.0675
107	SLV 11	0.07216	2.60123	-0.17434	-2.2944	0.1091	0.0676
107	SLV 12	0.07216	2.60123	-0.17434	-2.2944	0.1091	0.0676
107	SLV 13	0.25319	-0.78041	-0.30178	0.6887	0.1021	-0.0202
107	SLV 14	0.25319	-0.78041	-0.30178	0.6887	0.1021	-0.0202
107	SLV 15	0.25319	0.78035	-0.30178	-0.6881	0.1021	0.0203
107	SLV 16	0.25319	0.78035	-0.30178	-0.6881	0.1021	0.0203
108	SLU 1	0.00542	-0.00003	-0.11973	0.0003	-0.1121	-0.0001
108	SLU 2	0.00542	-0.00003	-0.11974	0.0003	-0.1121	-0.0001
108	SLU 3	0.00635	-0.00002	-0.12608	0.0003	-0.1191	-0.0001
108	SLU 4	0.00773	0	-0.13558	0.0003	-0.1297	-0.0001
108	SLU 5	0.00773	0	-0.13559	0.0003	-0.1298	-0.0001
108	SLU 6	0.00689	-0.00003	-0.13179	0.0003	-0.1241	-0.0001
108	SLU 7	0.00781	-0.00002	-0.13813	0.0003	-0.1312	-0.0001
108	SLU 8	0.0092	0	-0.14763	0.0003	-0.1418	-0.0001
108	SLU 9	0.0092	0	-0.14764	0.0003	-0.1418	-0.0001
108	SLU 10	0.00836	-0.00003	-0.14382	0.0003	-0.1361	-0.0001
108	SLU 11	0.00836	-0.00003	-0.14383	0.0003	-0.1361	-0.0001
108	SLU 12	0.00928	-0.00002	-0.15016	0.0003	-0.1432	-0.0001
108	SLU 13	0.00928	-0.00002	-0.15017	0.0003	-0.1432	-0.0001

Nodo	Cont.	Spostamento			Rotazione		
Ind.	N.br.	ux	uy	uz	rx	ry	rz
108	SLU 14	0.00656	-0.00017	-0.13086	0.0004	-0.1221	-0.0001
108	SLU 15	0.00748	-0.00016	-0.13721	0.0003	-0.1292	-0.0001
108	SLU 16	0.00887	-0.00014	-0.1467	0.0004	-0.1398	-0.0001
108	SLU 17	0.00887	-0.00014	-0.14671	0.0003	-0.1398	-0.0001
108	SLU 18	0.00803	-0.00017	-0.14291	0.0004	-0.1342	-0.0001
108	SLU 19	0.00895	-0.00016	-0.14925	0.0004	-0.1413	-0.0001
108	SLU 20	0.01034	-0.00014	-0.15875	0.0004	-0.1518	-0.0001
108	SLU 21	0.01034	-0.00014	-0.15876	0.0004	-0.1519	-0.0001
108	SLU 22	0.00949	-0.00017	-0.15494	0.0004	-0.1462	-0.0001
108	SLU 23	0.00949	-0.00017	-0.15495	0.0004	-0.1462	-0.0001
108	SLU 24	0.01042	-0.00016	-0.16129	0.0004	-0.1533	-0.0001
108	SLU 25	0.01042	-0.00016	-0.1613	0.0004	-0.1533	-0.0001
108	SLU 26	0.00827	-0.00038	-0.14753	0.0005	-0.1372	-0.0001
108	SLU 27	0.00827	-0.00038	-0.14754	0.0005	-0.1372	-0.0001
108	SLU 28	0.00919	-0.00037	-0.15387	0.0005	-0.1443	-0.0001
108	SLU 29	0.00919	-0.00037	-0.15388	0.0005	-0.1443	-0.0001
108	SLU 30	0.00973	-0.00038	-0.15958	0.0005	-0.1493	-0.0001
108	SLU 31	0.00973	-0.00038	-0.15959	0.0005	-0.1493	-0.0001
108	SLU 32	0.01066	-0.00037	-0.16592	0.0005	-0.1563	-0.0001
108	SLU 33	0.01066	-0.00037	-0.16593	0.0005	-0.1564	-0.0001
108	SLU 34	0.00542	-0.00003	-0.11973	0.0003	-0.1121	-0.0001
108	SLU 35	0.00542	-0.00003	-0.11974	0.0003	-0.1121	-0.0001
108	SLU 36	0.00635	-0.00002	-0.12608	0.0003	-0.1191	-0.0001
108	SLU 37	0.00773	0	-0.13558	0.0003	-0.1297	-0.0001
108	SLU 38	0.00773	0	-0.13559	0.0003	-0.1298	-0.0001
108	SLU 39	0.00689	-0.00003	-0.13179	0.0003	-0.1241	-0.0001
108	SLU 40	0.00781	-0.00002	-0.13813	0.0003	-0.1312	-0.0001
108	SLU 41	0.0092	0	-0.14763	0.0003	-0.1418	-0.0001
108	SLU 42	0.0092	0	-0.14764	0.0003	-0.1418	-0.0001
108	SLU 43	0.00836	-0.00003	-0.14382	0.0003	-0.1361	-0.0001
108	SLU 44	0.00836	-0.00003	-0.14383	0.0003	-0.1361	-0.0001
108	SLU 45	0.00928	-0.00002	-0.15016	0.0003	-0.1432	-0.0001
108	SLU 46	0.00928	-0.00002	-0.15017	0.0003	-0.1432	-0.0001
108	SLU 47	0.00656	-0.00017	-0.13086	0.0004	-0.1221	-0.0001
108	SLU 48	0.00748	-0.00016	-0.13721	0.0003	-0.1292	-0.0001
108	SLU 49	0.00887	-0.00014	-0.1467	0.0004	-0.1398	-0.0001
108	SLU 50	0.00887	-0.00014	-0.14671	0.0003	-0.1398	-0.0001
108	SLU 51	0.00803	-0.00017	-0.14291	0.0004	-0.1342	-0.0001
108	SLU 52	0.00895	-0.00016	-0.14925	0.0004	-0.1413	-0.0001
108	SLU 53	0.01034	-0.00014	-0.15875	0.0004	-0.1518	-0.0001
108	SLU 54	0.01034	-0.00014	-0.15876	0.0004	-0.1519	-0.0001
108	SLU 55	0.00949	-0.00017	-0.15494	0.0004	-0.1462	-0.0001
108	SLU 56	0.00949	-0.00017	-0.15495	0.0004	-0.1462	-0.0001
108	SLU 57	0.01042	-0.00016	-0.16129	0.0004	-0.1533	-0.0001
108	SLU 58	0.01042	-0.00016	-0.1613	0.0004	-0.1533	-0.0001
108	SLU 59	0.00827	-0.00038	-0.14753	0.0005	-0.1372	-0.0001
108	SLU 60	0.00827	-0.00038	-0.14754	0.0005	-0.1372	-0.0001
108	SLU 61	0.00919	-0.00037	-0.15387	0.0005	-0.1443	-0.0001
108	SLU 62	0.00919	-0.00037	-0.15388	0.0005	-0.1443	-0.0001
108	SLU 63	0.00973	-0.00038	-0.15958	0.0005	-0.1493	-0.0001
108	SLU 64	0.00973	-0.00038	-0.15959	0.0005	-0.1493	-0.0001
108	SLU 65	0.01066	-0.00037	-0.16592	0.0005	-0.1563	-0.0001
108	SLU 66	0.01066	-0.00037	-0.16593	0.0005	-0.1564	-0.0001
108	SLU 67	0.00705	-0.00004	-0.15565	0.0004	-0.1457	-0.0001
108	SLU 68	0.00705	-0.00004	-0.15566	0.0004	-0.1457	-0.0001
108	SLU 69	0.00797	-0.00003	-0.162	0.0004	-0.1528	-0.0001
108	SLU 70	0.00936	-0.00001	-0.1715	0.0004	-0.1634	-0.0001
108	SLU 71	0.00936	-0.00001	-0.17151	0.0004	-0.1634	-0.0001
108	SLU 72	0.00851	-0.00004	-0.16771	0.0004	-0.1577	-0.0001
108	SLU 73	0.00944	-0.00003	-0.17405	0.0004	-0.1648	-0.0001
108	SLU 74	0.01083	-0.00001	-0.18355	0.0004	-0.1754	-0.0001
108	SLU 75	0.01083	-0.00001	-0.18356	0.0004	-0.1754	-0.0001
108	SLU 76	0.00998	-0.00004	-0.17974	0.0004	-0.1697	-0.0001
108	SLU 77	0.00998	-0.00004	-0.17975	0.0004	-0.1698	-0.0001
108	SLU 78	0.01091	-0.00003	-0.18608	0.0004	-0.1768	-0.0001
108	SLU 79	0.01091	-0.00003	-0.18609	0.0004	-0.1768	-0.0001
108	SLU 80	0.00819	-0.00018	-0.16678	0.0004	-0.1558	-0.0001
108	SLU 81	0.00911	-0.00017	-0.17312	0.0004	-0.1628	-0.0001
108	SLU 82	0.0105	-0.00015	-0.18262	0.0004	-0.1734	-0.0001
108	SLU 83	0.0105	-0.00015	-0.18263	0.0004	-0.1734	-0.0001
108	SLU 84	0.00965	-0.00018	-0.17883	0.0004	-0.1678	-0.0001
108	SLU 85	0.01058	-0.00017	-0.18517	0.0004	-0.1749	-0.0001
108	SLU 86	0.01197	-0.00015	-0.19467	0.0005	-0.1855	-0.0001
108	SLU 87	0.01197	-0.00015	-0.19468	0.0004	-0.1855	-0.0001
108	SLU 88	0.01112	-0.00018	-0.19086	0.0005	-0.1798	-0.0001
108	SLU 89	0.01112	-0.00018	-0.19087	0.0005	-0.1798	-0.0001
108	SLU 90	0.01205	-0.00017	-0.1972	0.0005	-0.1869	-0.0001
108	SLU 91	0.01205	-0.00017	-0.19721	0.0005	-0.1869	-0.0001
108	SLU 92	0.00989	-0.00039	-0.18345	0.0006	-0.1708	-0.0001
108	SLU 93	0.00989	-0.00039	-0.18346	0.0006	-0.1709	-0.0001
108	SLU 94	0.01082	-0.00037	-0.18979	0.0006	-0.1779	-0.0001
108	SLU 95	0.01082	-0.00037	-0.1898	0.0006	-0.1779	-0.0001
108	SLU 96	0.01136	-0.00039	-0.1955	0.0006	-0.1829	-0.0001
108	SLU 97	0.01136	-0.00039	-0.19551	0.0006	-0.1829	-0.0001
108	SLU 98	0.01229	-0.00038	-0.20184	0.0006	-0.19	-0.0001
108	SLU 99	0.01229	-0.00038	-0.20185	0.0006	-0.19	-0.0001
108	SLU 100	0.00705	-0.00004	-0.15565	0.0004	-0.1457	-0.0001
108	SLU 101	0.00705	-0.00004	-0.15566	0.0004	-0.1457	-0.0001
108	SLU 102	0.00797	-0.00003	-0.162	0.0004	-0.1528	-0.0001
108	SLU 103	0.00936	-0.00001	-0.1715	0.0004	-0.1634	-0.0001
108	SLU 104	0.00936	-0.00001	-0.17151	0.0004	-0.1634	-0.0001
108	SLU 105	0.00851	-0.00004	-0.16771	0.0004	-0.1577	-0.0001
108	SLU 106	0.00944	-0.00003	-0.17405	0.0004	-0.1648	-0.0001
108	SLU 107	0.01083	-0.00001	-0.18355	0.0004	-0.1754	-0.0001
108	SLU 108	0.01083	-0.00001	-0.18356	0.0004	-0.1754	-0.0001

Nodo	Cont.	Spostamento			Rotazione		
Ind.	N.br.	ux	uy	uz	rx	ry	rz
108	SLU 109	0.00998	-0.00004	-0.17974	0.0004	-0.1697	-0.0001
108	SLU 110	0.00998	-0.00004	-0.17975	0.0004	-0.1698	-0.0001
108	SLU 111	0.01091	-0.00003	-0.18608	0.0004	-0.1768	-0.0001
108	SLU 112	0.01091	-0.00003	-0.18609	0.0004	-0.1768	-0.0001
108	SLU 113	0.00819	-0.00018	-0.16678	0.0004	-0.1558	-0.0001
108	SLU 114	0.00911	-0.00017	-0.17312	0.0004	-0.1628	-0.0001
108	SLU 115	0.0105	-0.00015	-0.18262	0.0004	-0.1734	-0.0001
108	SLU 116	0.0105	-0.00015	-0.18263	0.0004	-0.1734	-0.0001
108	SLU 117	0.00965	-0.00018	-0.17883	0.0004	-0.1678	-0.0001
108	SLU 118	0.01058	-0.00017	-0.18517	0.0004	-0.1749	-0.0001
108	SLU 119	0.01197	-0.00015	-0.19467	0.0005	-0.1855	-0.0001
108	SLU 120	0.01197	-0.00015	-0.19468	0.0004	-0.1855	-0.0001
108	SLU 121	0.01112	-0.00018	-0.19086	0.0005	-0.1798	-0.0001
108	SLU 122	0.01112	-0.00018	-0.19087	0.0005	-0.1798	-0.0001
108	SLU 123	0.01205	-0.00017	-0.1972	0.0005	-0.1869	-0.0001
108	SLU 124	0.01205	-0.00017	-0.19721	0.0005	-0.1869	-0.0001
108	SLU 125	0.00989	-0.00039	-0.18345	0.0006	-0.1708	-0.0001
108	SLU 126	0.00989	-0.00039	-0.18346	0.0006	-0.1709	-0.0001
108	SLU 127	0.01082	-0.00037	-0.18979	0.0006	-0.1779	-0.0001
108	SLU 128	0.01082	-0.00037	-0.1898	0.0006	-0.1779	-0.0001
108	SLU 129	0.01136	-0.00039	-0.1955	0.0006	-0.1829	-0.0001
108	SLU 130	0.01136	-0.00039	-0.19551	0.0006	-0.1829	-0.0001
108	SLU 131	0.01229	-0.00038	-0.20184	0.0006	-0.19	-0.0001
108	SLU 132	0.01229	-0.00038	-0.20185	0.0006	-0.19	-0.0001
108	SLE RA 1	0.00542	-0.00003	-0.11973	0.0003	-0.1121	-0.0001
108	SLE RA 2	0.00542	-0.00003	-0.11974	0.0003	-0.1121	-0.0001
108	SLE RA 3	0.00604	-0.00002	-0.12397	0.0003	-0.1168	-0.0001
108	SLE RA 4	0.00696	-0.00001	-0.1303	0.0003	-0.1238	-0.0001
108	SLE RA 5	0.00696	-0.00001	-0.13031	0.0003	-0.1239	-0.0001
108	SLE RA 6	0.0064	-0.00003	-0.12777	0.0003	-0.1201	-0.0001
108	SLE RA 7	0.00702	-0.00002	-0.132	0.0003	-0.1248	-0.0001
108	SLE RA 8	0.00794	-0.00001	-0.13833	0.0003	-0.1319	-0.0001
108	SLE RA 9	0.00794	-0.00001	-0.13834	0.0003	-0.1319	-0.0001
108	SLE RA 10	0.00738	-0.00003	-0.13579	0.0003	-0.1281	-0.0001
108	SLE RA 11	0.00738	-0.00003	-0.1358	0.0003	-0.1281	-0.0001
108	SLE RA 12	0.00799	-0.00002	-0.14002	0.0003	-0.1328	-0.0001
108	SLE RA 13	0.00799	-0.00002	-0.14003	0.0003	-0.1328	-0.0001
108	SLE RA 14	0.00618	-0.00012	-0.12715	0.0003	-0.1188	-0.0001
108	SLE RA 15	0.0068	-0.00011	-0.13138	0.0003	-0.1235	-0.0001
108	SLE RA 16	0.00772	-0.0001	-0.13771	0.0003	-0.1306	-0.0001
108	SLE RA 17	0.00772	-0.0001	-0.13772	0.0003	-0.1306	-0.0001
108	SLE RA 18	0.00716	-0.00012	-0.13518	0.0003	-0.1268	-0.0001
108	SLE RA 19	0.00778	-0.00011	-0.13941	0.0003	-0.1315	-0.0001
108	SLE RA 20	0.0087	-0.0001	-0.14574	0.0003	-0.1386	-0.0001
108	SLE RA 21	0.0087	-0.0001	-0.14575	0.0003	-0.1386	-0.0001
108	SLE RA 22	0.00814	-0.00012	-0.14321	0.0003	-0.1348	-0.0001
108	SLE RA 23	0.00814	-0.00012	-0.14321	0.0003	-0.1348	-0.0001
108	SLE RA 24	0.00875	-0.00011	-0.14743	0.0003	-0.1395	-0.0001
108	SLE RA 25	0.00875	-0.00012	-0.14744	0.0003	-0.1395	-0.0001
108	SLE RA 26	0.00732	-0.00026	-0.13826	0.0004	-0.1288	-0.0001
108	SLE RA 27	0.00732	-0.00026	-0.13827	0.0004	-0.1288	-0.0001
108	SLE RA 28	0.00794	-0.00025	-0.14249	0.0004	-0.1336	-0.0001
108	SLE RA 29	0.00794	-0.00025	-0.1425	0.0004	-0.1336	-0.0001
108	SLE RA 30	0.0083	-0.00026	-0.1463	0.0004	-0.1369	-0.0001
108	SLE RA 31	0.0083	-0.00026	-0.1463	0.0004	-0.1369	-0.0001
108	SLE RA 32	0.00891	-0.00025	-0.15052	0.0004	-0.1416	-0.0001
108	SLE RA 33	0.00891	-0.00025	-0.15053	0.0004	-0.1416	-0.0001
108	SLE FR 1	0.00542	-0.00003	-0.11973	0.0003	-0.1121	-0.0001
108	SLE FR 2	0.00542	-0.00003	-0.11974	0.0003	-0.1121	-0.0001
108	SLE FR 3	0.00604	-0.00002	-0.12396	0.0003	-0.1168	-0.0001
108	SLE FR 4	0.00581	-0.00003	-0.12294	0.0003	-0.1153	-0.0001
108	SLE FR 5	0.00618	-0.00012	-0.12714	0.0003	-0.1188	-0.0001
108	SLE QP 1	0.00542	-0.00003	-0.11973	0.0003	-0.1121	-0.0001
108	SLO 1	-0.13566	-0.32025	-0.21904	0.2828	-0.1066	0.0083
108	SLO 2	-0.13566	-0.32025	-0.21904	0.2828	-0.1066	0.0083
108	SLO 3	-0.13566	0.32019	-0.21904	-0.2822	-0.1066	-0.0084
108	SLO 4	-0.13566	0.32019	-0.21904	-0.2822	-0.1066	-0.0084
108	SLO 5	-0.0369	-1.06742	-0.14952	0.9419	-0.1104	0.0277
108	SLO 6	-0.0369	-1.06742	-0.14952	0.9419	-0.1104	0.0277
108	SLO 7	-0.0369	1.06736	-0.14952	-0.9413	-0.1104	-0.0278
108	SLO 8	-0.0369	1.06736	-0.14952	-0.9413	-0.1104	-0.0278
108	SLO 9	0.04774	-1.06742	-0.08993	0.9419	-0.1137	0.0277
108	SLO 10	0.04774	-1.06742	-0.08993	0.9419	-0.1137	0.0277
108	SLO 11	0.04774	1.06736	-0.08993	-0.9413	-0.1137	-0.0278
108	SLO 12	0.04774	1.06736	-0.08993	-0.9413	-0.1137	-0.0278
108	SLO 13	0.1465	-0.32025	-0.02041	0.2828	-0.1175	0.0083
108	SLO 14	0.1465	-0.32025	-0.02041	0.2828	-0.1175	0.0083
108	SLO 15	0.1465	0.32019	-0.02041	-0.2822	-0.1175	-0.0084
108	SLO 16	0.1465	0.32019	-0.02041	-0.2822	-0.1175	-0.0084
108	SLD 1	-0.11034	-0.2959	-0.20122	0.2613	-0.1076	0.0076
108	SLD 2	-0.11034	-0.2959	-0.20122	0.2613	-0.1076	0.0076
108	SLD 3	-0.11034	0.29585	-0.20122	-0.2607	-0.1076	-0.0077
108	SLD 4	-0.11034	0.29585	-0.20122	-0.2607	-0.1076	-0.0077
108	SLD 5	-0.02931	-0.98628	-0.14418	0.8703	-0.1107	0.0256
108	SLD 6	-0.02931	-0.98628	-0.14418	0.8703	-0.1107	0.0256
108	SLD 7	-0.02931	0.98623	-0.14418	-0.8697	-0.1107	-0.0257
108	SLD 8	-0.02931	0.98623	-0.14418	-0.8697	-0.1107	-0.0257
108	SLD 9	0.04015	-0.98628	-0.09528	0.8703	-0.1134	0.0256
108	SLD 10	0.04015	-0.98628	-0.09528	0.8703	-0.1134	0.0256
108	SLD 11	0.04015	0.98623	-0.09528	-0.8697	-0.1134	-0.0257
108	SLD 12	0.04015	0.98623	-0.09528	-0.8697	-0.1134	-0.0257
108	SLD 13	0.12118	-0.2959	-0.03824	0.2613	-0.1165	0.0076
108	SLD 14	0.12118	-0.2959	-0.03824	0.2613	-0.1165	0.0076
108	SLD 15	0.12118	0.29585	-0.03824	-0.2607	-0.1165	-0.0077
108	SLD 16	0.12118	0.29585	-0.03824	-0.2607	-0.1165	-0.0077

Nodo	Cont.	Spostamento			Rotazione		
Ind.	N.br.	ux	uy	uz	rx	ry	rz
108	SLV 1	-0.25319	-0.78041	-0.30178	0.6887	-0.1021	0.0202
108	SLV 2	-0.25319	-0.78041	-0.30178	0.6887	-0.1021	0.0202
108	SLV 3	-0.25319	0.78035	-0.30178	-0.6881	-0.1021	-0.0203
108	SLV 4	-0.25319	0.78035	-0.30178	-0.6881	-0.1021	-0.0203
108	SLV 5	-0.07216	-2.60129	-0.17434	2.2949	-0.1091	0.0675
108	SLV 6	-0.07216	-2.60129	-0.17434	2.2949	-0.1091	0.0675
108	SLV 7	-0.07216	2.60123	-0.17434	-2.2944	-0.1091	-0.0676
108	SLV 8	-0.07216	2.60123	-0.17434	-2.2944	-0.1091	-0.0676
108	SLV 9	0.083	-2.60129	-0.06511	2.2949	-0.115	0.0675
108	SLV 10	0.083	-2.60129	-0.06511	2.2949	-0.115	0.0675
108	SLV 11	0.083	2.60123	-0.06511	-2.2944	-0.115	-0.0676
108	SLV 12	0.083	2.60123	-0.06511	-2.2944	-0.115	-0.0676
108	SLV 13	0.26403	-0.78041	0.06232	0.6887	-0.122	0.0202
108	SLV 14	0.26403	-0.78041	0.06232	0.6887	-0.122	0.0202
108	SLV 15	0.26403	0.78035	0.06232	-0.6881	-0.122	-0.0203
108	SLV 16	0.26403	0.78035	0.06232	-0.6881	-0.122	-0.0203
109	SLU 1	-0.00542	-0.00004	-0.11974	0.0005	0.1121	0.0001
109	SLU 2	-0.00542	-0.00004	-0.11974	0.0005	0.1121	0.0001
109	SLU 3	-0.00635	-0.00003	-0.12608	0.0005	0.1192	0.0001
109	SLU 4	-0.00774	-0.00001	-0.13559	0.0005	0.1298	0.0001
109	SLU 5	-0.00774	-0.00001	-0.13559	0.0005	0.1298	0.0001
109	SLU 6	-0.00647	-0.00004	-0.13216	0.0005	0.1241	0.0001
109	SLU 7	-0.0074	-0.00003	-0.1385	0.0005	0.1312	0.0001
109	SLU 8	-0.00879	-0.00001	-0.14801	0.0005	0.1418	0.0001
109	SLU 9	-0.00879	-0.00001	-0.14801	0.0005	0.1418	0.0001
109	SLU 10	-0.00753	-0.00004	-0.14457	0.0005	0.1362	0.0001
109	SLU 11	-0.00753	-0.00004	-0.14457	0.0005	0.1362	0.0001
109	SLU 12	-0.00845	-0.00003	-0.15092	0.0005	0.1433	0.0001
109	SLU 13	-0.00845	-0.00003	-0.15092	0.0005	0.1433	0.0001
109	SLU 14	-0.00587	-0.00018	-0.13148	0.0005	0.1222	0.0001
109	SLU 15	-0.00679	-0.00017	-0.13782	0.0005	0.1292	0.0001
109	SLU 16	-0.00818	-0.00015	-0.14733	0.0006	0.1399	0.0001
109	SLU 17	-0.00818	-0.00015	-0.14733	0.0005	0.1399	0.0001
109	SLU 18	-0.00692	-0.00018	-0.1439	0.0006	0.1342	0.0001
109	SLU 19	-0.00785	-0.00017	-0.15024	0.0006	0.1413	0.0001
109	SLU 20	-0.00923	-0.00015	-0.15975	0.0006	0.1519	0.0001
109	SLU 21	-0.00923	-0.00015	-0.15975	0.0006	0.1519	0.0001
109	SLU 22	-0.00797	-0.00018	-0.15631	0.0006	0.1463	0.0001
109	SLU 23	-0.00797	-0.00018	-0.15631	0.0006	0.1463	0.0001
109	SLU 24	-0.0089	-0.00017	-0.16266	0.0006	0.1534	0.0001
109	SLU 25	-0.0089	-0.00017	-0.16266	0.0006	0.1534	0.0001
109	SLU 26	-0.00654	-0.00039	-0.14909	0.0007	0.1373	0.0001
109	SLU 27	-0.00654	-0.00039	-0.14909	0.0007	0.1373	0.0001
109	SLU 28	-0.00746	-0.00038	-0.15543	0.0007	0.1444	0.0001
109	SLU 29	-0.00746	-0.00038	-0.15543	0.0007	0.1444	0.0001
109	SLU 30	-0.00759	-0.00039	-0.1615	0.0007	0.1494	0.0001
109	SLU 31	-0.00759	-0.00039	-0.1615	0.0007	0.1494	0.0001
109	SLU 32	-0.00852	-0.00038	-0.16785	0.0007	0.1564	0.0001
109	SLU 33	-0.00852	-0.00038	-0.16785	0.0007	0.1564	0.0001
109	SLU 34	-0.00542	-0.00004	-0.11974	0.0005	0.1121	0.0001
109	SLU 35	-0.00542	-0.00004	-0.11974	0.0005	0.1121	0.0001
109	SLU 36	-0.00635	-0.00003	-0.12608	0.0005	0.1192	0.0001
109	SLU 37	-0.00774	-0.00001	-0.13559	0.0005	0.1298	0.0001
109	SLU 38	-0.00774	-0.00001	-0.13559	0.0005	0.1298	0.0001
109	SLU 39	-0.00647	-0.00004	-0.13216	0.0005	0.1241	0.0001
109	SLU 40	-0.0074	-0.00003	-0.1385	0.0005	0.1312	0.0001
109	SLU 41	-0.00879	-0.00001	-0.14801	0.0005	0.1418	0.0001
109	SLU 42	-0.00879	-0.00001	-0.14801	0.0005	0.1418	0.0001
109	SLU 43	-0.00753	-0.00004	-0.14457	0.0005	0.1362	0.0001
109	SLU 44	-0.00753	-0.00004	-0.14457	0.0005	0.1362	0.0001
109	SLU 45	-0.00845	-0.00003	-0.15092	0.0005	0.1433	0.0001
109	SLU 46	-0.00845	-0.00003	-0.15092	0.0005	0.1433	0.0001
109	SLU 47	-0.00587	-0.00018	-0.13148	0.0005	0.1222	0.0001
109	SLU 48	-0.00679	-0.00017	-0.13782	0.0005	0.1292	0.0001
109	SLU 49	-0.00818	-0.00015	-0.14733	0.0006	0.1399	0.0001
109	SLU 50	-0.00818	-0.00015	-0.14733	0.0005	0.1399	0.0001
109	SLU 51	-0.00692	-0.00018	-0.1439	0.0006	0.1342	0.0001
109	SLU 52	-0.00785	-0.00017	-0.15024	0.0006	0.1413	0.0001
109	SLU 53	-0.00923	-0.00015	-0.15975	0.0006	0.1519	0.0001
109	SLU 54	-0.00923	-0.00015	-0.15975	0.0006	0.1519	0.0001
109	SLU 55	-0.00797	-0.00018	-0.15631	0.0006	0.1463	0.0001
109	SLU 56	-0.00797	-0.00018	-0.15631	0.0006	0.1463	0.0001
109	SLU 57	-0.0089	-0.00017	-0.16266	0.0006	0.1534	0.0001
109	SLU 58	-0.0089	-0.00017	-0.16266	0.0006	0.1534	0.0001
109	SLU 59	-0.00654	-0.00039	-0.14909	0.0007	0.1373	0.0001
109	SLU 60	-0.00654	-0.00039	-0.14909	0.0007	0.1373	0.0001
109	SLU 61	-0.00746	-0.00038	-0.15543	0.0007	0.1444	0.0001
109	SLU 62	-0.00746	-0.00038	-0.15543	0.0007	0.1444	0.0001
109	SLU 63	-0.00759	-0.00039	-0.1615	0.0007	0.1494	0.0001
109	SLU 64	-0.00759	-0.00039	-0.1615	0.0007	0.1494	0.0001
109	SLU 65	-0.00852	-0.00038	-0.16785	0.0007	0.1564	0.0001
109	SLU 66	-0.00852	-0.00038	-0.16785	0.0007	0.1564	0.0001
109	SLU 67	-0.00705	-0.00005	-0.15566	0.0006	0.1457	0.0001
109	SLU 68	-0.00705	-0.00005	-0.15566	0.0006	0.1457	0.0001
109	SLU 69	-0.00797	-0.00004	-0.162	0.0006	0.1528	0.0001
109	SLU 70	-0.00936	-0.00002	-0.17152	0.0006	0.1634	0.0001
109	SLU 71	-0.00936	-0.00002	-0.17152	0.0006	0.1634	0.0001
109	SLU 72	-0.0081	-0.00005	-0.16808	0.0006	0.1578	0.0001
109	SLU 73	-0.00903	-0.00004	-0.17442	0.0006	0.1648	0.0001
109	SLU 74	-0.01042	-0.00002	-0.18393	0.0006	0.1754	0.0001
109	SLU 75	-0.01042	-0.00003	-0.18393	0.0006	0.1754	0.0001
109	SLU 76	-0.00915	-0.00005	-0.1805	0.0006	0.1698	0.0001
109	SLU 77	-0.00915	-0.00005	-0.1805	0.0006	0.1698	0.0001
109	SLU 78	-0.01008	-0.00004	-0.18684	0.0006	0.1769	0.0001
109	SLU 79	-0.01008	-0.00004	-0.18684	0.0006	0.1769	0.0001

Nodo	Cont.	Spostamento			Rotazione		
Ind.	N.br.	ux	uy	uz	rx	ry	rz
109	SLU 80	-0.00749	-0.00019	-0.1674	0.0007	0.1558	0.0001
109	SLU 81	-0.00842	-0.00018	-0.17374	0.0007	0.1629	0.0001
109	SLU 82	-0.00981	-0.00016	-0.18325	0.0007	0.1735	0.0001
109	SLU 83	-0.00981	-0.00016	-0.18325	0.0007	0.1735	0.0001
109	SLU 84	-0.00855	-0.00019	-0.17982	0.0007	0.1678	0.0001
109	SLU 85	-0.00947	-0.00018	-0.18616	0.0007	0.1749	0.0001
109	SLU 86	-0.01086	-0.00017	-0.19567	0.0007	0.1855	0.0001
109	SLU 87	-0.01086	-0.00017	-0.19567	0.0007	0.1855	0.0001
109	SLU 88	-0.0096	-0.00019	-0.19224	0.0007	0.1799	0.0001
109	SLU 89	-0.0096	-0.0002	-0.19224	0.0007	0.1799	0.0001
109	SLU 90	-0.01053	-0.00018	-0.19858	0.0007	0.187	0.0002
109	SLU 91	-0.01053	-0.00018	-0.19858	0.0007	0.187	0.0002
109	SLU 92	-0.00816	-0.0004	-0.18501	0.0008	0.1709	0.0002
109	SLU 93	-0.00816	-0.0004	-0.18501	0.0008	0.1709	0.0002
109	SLU 94	-0.00909	-0.00039	-0.19135	0.0008	0.178	0.0002
109	SLU 95	-0.00909	-0.00039	-0.19135	0.0008	0.178	0.0002
109	SLU 96	-0.00922	-0.0004	-0.19743	0.0008	0.183	0.0002
109	SLU 97	-0.00922	-0.0004	-0.19743	0.0008	0.183	0.0002
109	SLU 98	-0.01014	-0.00039	-0.20377	0.0008	0.1901	0.0002
109	SLU 99	-0.01014	-0.00039	-0.20377	0.0008	0.1901	0.0002
109	SLU 100	-0.00705	-0.00005	-0.15566	0.0006	0.1457	0.0001
109	SLU 101	-0.00705	-0.00005	-0.15566	0.0006	0.1457	0.0001
109	SLU 102	-0.00797	-0.00004	-0.162	0.0006	0.1528	0.0001
109	SLU 103	-0.00936	-0.00002	-0.17152	0.0006	0.1634	0.0001
109	SLU 104	-0.00936	-0.00002	-0.17152	0.0006	0.1634	0.0001
109	SLU 105	-0.0081	-0.00005	-0.16808	0.0006	0.1578	0.0001
109	SLU 106	-0.00903	-0.00004	-0.17442	0.0006	0.1648	0.0001
109	SLU 107	-0.01042	-0.00002	-0.18393	0.0006	0.1754	0.0001
109	SLU 108	-0.01042	-0.00003	-0.18393	0.0006	0.1754	0.0001
109	SLU 109	-0.00915	-0.00005	-0.1805	0.0006	0.1698	0.0001
109	SLU 110	-0.00915	-0.00005	-0.1805	0.0006	0.1698	0.0001
109	SLU 111	-0.01008	-0.00004	-0.18684	0.0006	0.1769	0.0001
109	SLU 112	-0.01008	-0.00004	-0.18684	0.0006	0.1769	0.0001
109	SLU 113	-0.00749	-0.00019	-0.1674	0.0007	0.1558	0.0001
109	SLU 114	-0.00842	-0.00018	-0.17374	0.0007	0.1629	0.0001
109	SLU 115	-0.00981	-0.00016	-0.18325	0.0007	0.1735	0.0001
109	SLU 116	-0.00981	-0.00016	-0.18325	0.0007	0.1735	0.0001
109	SLU 117	-0.00855	-0.00019	-0.17982	0.0007	0.1678	0.0001
109	SLU 118	-0.00947	-0.00018	-0.18616	0.0007	0.1749	0.0001
109	SLU 119	-0.01086	-0.00017	-0.19567	0.0007	0.1855	0.0001
109	SLU 120	-0.01086	-0.00017	-0.19567	0.0007	0.1855	0.0001
109	SLU 121	-0.0096	-0.00019	-0.19224	0.0007	0.1799	0.0001
109	SLU 122	-0.0096	-0.0002	-0.19224	0.0007	0.1799	0.0001
109	SLU 123	-0.01053	-0.00018	-0.19858	0.0007	0.187	0.0002
109	SLU 124	-0.01053	-0.00018	-0.19858	0.0007	0.187	0.0002
109	SLU 125	-0.00816	-0.0004	-0.18501	0.0008	0.1709	0.0002
109	SLU 126	-0.00816	-0.0004	-0.18501	0.0008	0.1709	0.0002
109	SLU 127	-0.00909	-0.00039	-0.19135	0.0008	0.178	0.0002
109	SLU 128	-0.00909	-0.00039	-0.19135	0.0008	0.178	0.0002
109	SLU 129	-0.00922	-0.0004	-0.19743	0.0008	0.183	0.0002
109	SLU 130	-0.00922	-0.0004	-0.19743	0.0008	0.183	0.0002
109	SLU 131	-0.01014	-0.00039	-0.20377	0.0008	0.1901	0.0002
109	SLU 132	-0.01014	-0.00039	-0.20377	0.0008	0.1901	0.0002
109	SLE RA 1	-0.00542	-0.00004	-0.11974	0.0005	0.1121	0.0001
109	SLE RA 2	-0.00542	-0.00004	-0.11974	0.0005	0.1121	0.0001
109	SLE RA 3	-0.00604	-0.00003	-0.12397	0.0005	0.1168	0.0001
109	SLE RA 4	-0.00696	-0.00002	-0.13031	0.0005	0.1239	0.0001
109	SLE RA 5	-0.00696	-0.00002	-0.13031	0.0005	0.1239	0.0001
109	SLE RA 6	-0.00612	-0.00004	-0.12802	0.0005	0.1201	0.0001
109	SLE RA 7	-0.00674	-0.00003	-0.13225	0.0005	0.1248	0.0001
109	SLE RA 8	-0.00767	-0.00002	-0.13859	0.0005	0.1319	0.0001
109	SLE RA 9	-0.00767	-0.00002	-0.13859	0.0005	0.1319	0.0001
109	SLE RA 10	-0.00682	-0.00004	-0.1363	0.0005	0.1281	0.0001
109	SLE RA 11	-0.00682	-0.00004	-0.1363	0.0005	0.1281	0.0001
109	SLE RA 12	-0.00744	-0.00003	-0.14052	0.0005	0.1329	0.0001
109	SLE RA 13	-0.00744	-0.00003	-0.14052	0.0005	0.1329	0.0001
109	SLE RA 14	-0.00572	-0.00013	-0.12757	0.0005	0.1188	0.0001
109	SLE RA 15	-0.00634	-0.00013	-0.13179	0.0005	0.1235	0.0001
109	SLE RA 16	-0.00726	-0.00011	-0.13814	0.0005	0.1306	0.0001
109	SLE RA 17	-0.00726	-0.00011	-0.13814	0.0005	0.1306	0.0001
109	SLE RA 18	-0.00642	-0.00013	-0.13584	0.0005	0.1268	0.0001
109	SLE RA 19	-0.00704	-0.00013	-0.14007	0.0005	0.1316	0.0001
109	SLE RA 20	-0.00796	-0.00012	-0.14641	0.0005	0.1386	0.0001
109	SLE RA 21	-0.00796	-0.00012	-0.14641	0.0005	0.1386	0.0001
109	SLE RA 22	-0.00712	-0.00013	-0.14412	0.0005	0.1349	0.0001
109	SLE RA 23	-0.00712	-0.00014	-0.14412	0.0005	0.1349	0.0001
109	SLE RA 24	-0.00774	-0.00013	-0.14835	0.0005	0.1396	0.0001
109	SLE RA 25	-0.00774	-0.00013	-0.14835	0.0005	0.1396	0.0001
109	SLE RA 26	-0.00617	-0.00027	-0.1393	0.0006	0.1289	0.0001
109	SLE RA 27	-0.00617	-0.00027	-0.1393	0.0006	0.1289	0.0001
109	SLE RA 28	-0.00678	-0.00027	-0.14353	0.0006	0.1336	0.0001
109	SLE RA 29	-0.00678	-0.00027	-0.14353	0.0006	0.1336	0.0001
109	SLE RA 30	-0.00687	-0.00027	-0.14758	0.0006	0.1369	0.0001
109	SLE RA 31	-0.00687	-0.00027	-0.14758	0.0006	0.1369	0.0001
109	SLE RA 32	-0.00748	-0.00027	-0.15181	0.0006	0.1417	0.0001
109	SLE RA 33	-0.00748	-0.00027	-0.15181	0.0006	0.1417	0.0001
109	SLE FR 1	-0.00542	-0.00004	-0.11974	0.0005	0.1121	0.0001
109	SLE FR 2	-0.00542	-0.00004	-0.11974	0.0005	0.1121	0.0001
109	SLE FR 3	-0.00604	-0.00003	-0.12397	0.0005	0.1168	0.0001
109	SLE FR 4	-0.0057	-0.00004	-0.12305	0.0005	0.1153	0.0001
109	SLE FR 5	-0.00572	-0.00013	-0.12757	0.0005	0.1188	0.0001
109	SLE QP 1	-0.00542	-0.00004	-0.11974	0.0005	0.1121	0.0001
109	SLO 1	-0.14664	-0.32022	-0.02032	0.2826	0.1175	-0.0083
109	SLO 2	-0.14664	-0.32022	-0.02032	0.2826	0.1175	-0.0083
109	SLO 3	-0.14664	0.32014	-0.02032	-0.2817	0.1175	0.0085

Nodo	Cont.	Spostamento			Rotazione		
Ind.	N.br.	ux	uy	uz	rx	ry	rz
109	SLO 4	-0.14664	0.32014	-0.02032	-0.2817	0.1175	0.0085
109	SLO 5	-0.04779	-1.06732	-0.08991	0.941	0.1137	-0.0279
109	SLO 6	-0.04779	-1.06732	-0.08991	0.941	0.1137	-0.0279
109	SLO 7	-0.04779	1.06724	-0.08991	-0.9401	0.1137	0.0281
109	SLO 8	-0.04779	1.06724	-0.08991	-0.9401	0.1137	0.0281
109	SLO 9	0.03694	-1.06732	-0.14956	0.941	0.1104	-0.0279
109	SLO 10	0.03694	-1.06732	-0.14956	0.941	0.1104	-0.0279
109	SLO 11	0.03694	1.06724	-0.14956	-0.9401	0.1104	0.0281
109	SLO 12	0.03694	1.06724	-0.14956	-0.9401	0.1104	0.0281
109	SLO 13	0.1358	-0.32022	-0.21916	0.2826	0.1067	-0.0083
109	SLO 14	0.1358	-0.32022	-0.21916	0.2826	0.1067	-0.0083
109	SLO 15	0.1358	0.32014	-0.21916	-0.2817	0.1067	0.0085
109	SLO 16	0.1358	0.32014	-0.21916	-0.2817	0.1067	0.0085
109	SLD 1	-0.1213	-0.29588	-0.03816	0.2612	0.1165	-0.0077
109	SLD 2	-0.1213	-0.29588	-0.03816	0.2612	0.1165	-0.0077
109	SLD 3	-0.1213	0.29581	-0.03816	-0.2603	0.1165	0.0079
109	SLD 4	-0.1213	0.29581	-0.03816	-0.2603	0.1165	0.0079
109	SLD 5	-0.04018	-0.98619	-0.09527	0.8695	0.1134	-0.0258
109	SLD 6	-0.04018	-0.98619	-0.09527	0.8695	0.1134	-0.0258
109	SLD 7	-0.04018	0.98611	-0.09527	-0.8686	0.1134	0.026
109	SLD 8	-0.04018	0.98611	-0.09527	-0.8686	0.1134	0.026
109	SLD 9	0.02934	-0.98619	-0.14421	0.8695	0.1107	-0.0258
109	SLD 10	0.02934	-0.98619	-0.14421	0.8695	0.1107	-0.0258
109	SLD 11	0.02934	0.98611	-0.14421	-0.8686	0.1107	0.026
109	SLD 12	0.02934	0.98611	-0.14421	-0.8686	0.1107	0.026
109	SLD 13	0.11046	-0.29589	-0.20132	0.2612	0.1076	-0.0077
109	SLD 14	0.11046	-0.29589	-0.20132	0.2612	0.1076	-0.0077
109	SLD 15	0.11046	0.29581	-0.20132	-0.2603	0.1076	0.0079
109	SLD 16	0.11046	0.29581	-0.20132	-0.2603	0.1076	0.0079
109	SLV 1	-0.26429	-0.78034	0.0625	0.6881	0.122	-0.0204
109	SLV 2	-0.26429	-0.78034	0.0625	0.6881	0.122	-0.0204
109	SLV 3	-0.26429	0.78026	0.0625	-0.6872	0.122	0.0206
109	SLV 4	-0.26429	0.78026	0.0625	-0.6872	0.122	0.0206
109	SLV 5	-0.08308	-2.60103	-0.06507	2.2926	0.1151	-0.0682
109	SLV 6	-0.08308	-2.60103	-0.06507	2.2926	0.1151	-0.0682
109	SLV 7	-0.08308	2.60095	-0.06507	-2.2917	0.1151	0.0684
109	SLV 8	-0.08308	2.60095	-0.06507	-2.2917	0.1151	0.0684
109	SLV 9	0.07224	-2.60103	-0.17441	2.2926	0.1091	-0.0682
109	SLV 10	0.07224	-2.60103	-0.17441	2.2926	0.1091	-0.0682
109	SLV 11	0.07224	2.60095	-0.17441	-2.2917	0.1091	0.0684
109	SLV 12	0.07224	2.60095	-0.17441	-2.2917	0.1091	0.0684
109	SLV 13	0.25345	-0.78034	-0.30198	0.6881	0.1021	-0.0204
109	SLV 14	0.25345	-0.78034	-0.30198	0.6881	0.1021	-0.0204
109	SLV 15	0.25345	0.78026	-0.30198	-0.6872	0.1021	0.0206
109	SLV 16	0.25345	0.78026	-0.30198	-0.6872	0.1021	0.0206
110	SLU 1	0.00542	-0.00004	-0.11974	0.0005	-0.1121	-0.0001
110	SLU 2	0.00542	-0.00004	-0.11974	0.0005	-0.1121	-0.0001
110	SLU 3	0.00635	-0.00003	-0.12608	0.0005	-0.1192	-0.0001
110	SLU 4	0.00774	-0.00001	-0.13559	0.0005	-0.1298	-0.0001
110	SLU 5	0.00774	-0.00001	-0.13559	0.0005	-0.1298	-0.0001
110	SLU 6	0.00678	-0.00004	-0.13186	0.0005	-0.1241	-0.0001
110	SLU 7	0.00771	-0.00003	-0.1382	0.0005	-0.1312	-0.0001
110	SLU 8	0.0091	-0.00001	-0.14771	0.0005	-0.1418	-0.0001
110	SLU 9	0.0091	-0.00001	-0.14771	0.0005	-0.1418	-0.0001
110	SLU 10	0.00814	-0.00004	-0.14398	0.0005	-0.1361	-0.0001
110	SLU 11	0.00814	-0.00004	-0.14398	0.0005	-0.1361	-0.0001
110	SLU 12	0.00907	-0.00003	-0.15032	0.0005	-0.1432	-0.0001
110	SLU 13	0.00907	-0.00003	-0.15032	0.0005	-0.1432	-0.0001
110	SLU 14	0.00638	-0.00018	-0.13098	0.0005	-0.1221	-0.0001
110	SLU 15	0.00731	-0.00017	-0.13732	0.0005	-0.1292	-0.0001
110	SLU 16	0.0087	-0.00015	-0.14683	0.0006	-0.1398	-0.0001
110	SLU 17	0.0087	-0.00015	-0.14683	0.0005	-0.1398	-0.0001
110	SLU 18	0.00774	-0.00018	-0.1431	0.0006	-0.1342	-0.0001
110	SLU 19	0.00867	-0.00017	-0.14944	0.0006	-0.1412	-0.0001
110	SLU 20	0.01006	-0.00015	-0.15895	0.0006	-0.1518	-0.0001
110	SLU 21	0.01006	-0.00015	-0.15895	0.0006	-0.1518	-0.0001
110	SLU 22	0.00911	-0.00018	-0.15522	0.0006	-0.1462	-0.0001
110	SLU 23	0.00911	-0.00018	-0.15522	0.0006	-0.1462	-0.0001
110	SLU 24	0.01003	-0.00017	-0.16156	0.0006	-0.1533	-0.0001
110	SLU 25	0.01003	-0.00017	-0.16156	0.0006	-0.1533	-0.0001
110	SLU 26	0.00783	-0.00039	-0.14784	0.0007	-0.1372	-0.0001
110	SLU 27	0.00783	-0.00039	-0.14784	0.0007	-0.1372	-0.0001
110	SLU 28	0.00875	-0.00038	-0.15418	0.0007	-0.1443	-0.0001
110	SLU 29	0.00875	-0.00038	-0.15418	0.0007	-0.1443	-0.0001
110	SLU 30	0.00919	-0.00039	-0.15996	0.0007	-0.1492	-0.0001
110	SLU 31	0.00919	-0.00039	-0.15996	0.0007	-0.1492	-0.0001
110	SLU 32	0.01011	-0.00038	-0.1663	0.0007	-0.1563	-0.0001
110	SLU 33	0.01011	-0.00038	-0.1663	0.0007	-0.1563	-0.0001
110	SLU 34	0.00542	-0.00004	-0.11974	0.0005	-0.1121	-0.0001
110	SLU 35	0.00542	-0.00004	-0.11974	0.0005	-0.1121	-0.0001
110	SLU 36	0.00635	-0.00003	-0.12608	0.0005	-0.1192	-0.0001
110	SLU 37	0.00774	-0.00001	-0.13559	0.0005	-0.1298	-0.0001
110	SLU 38	0.00774	-0.00001	-0.13559	0.0005	-0.1298	-0.0001
110	SLU 39	0.00678	-0.00004	-0.13186	0.0005	-0.1241	-0.0001
110	SLU 40	0.00771	-0.00003	-0.1382	0.0005	-0.1312	-0.0001
110	SLU 41	0.0091	-0.00001	-0.14771	0.0005	-0.1418	-0.0001
110	SLU 42	0.0091	-0.00001	-0.14771	0.0005	-0.1418	-0.0001
110	SLU 43	0.00814	-0.00004	-0.14398	0.0005	-0.1361	-0.0001
110	SLU 44	0.00814	-0.00004	-0.14398	0.0005	-0.1361	-0.0001
110	SLU 45	0.00907	-0.00003	-0.15032	0.0005	-0.1432	-0.0001
110	SLU 46	0.00907	-0.00003	-0.15032	0.0005	-0.1432	-0.0001
110	SLU 47	0.00638	-0.00018	-0.13098	0.0005	-0.1221	-0.0001
110	SLU 48	0.00731	-0.00017	-0.13732	0.0005	-0.1292	-0.0001
110	SLU 49	0.0087	-0.00015	-0.14683	0.0006	-0.1398	-0.0001
110	SLU 50	0.0087	-0.00015	-0.14683	0.0005	-0.1398	-0.0001

Nodo	Cont.	Spostamento			Rotazione		
Ind.	N.br.	ux	uy	uz	rx	ry	rz
110	SLU 51	0.00774	-0.00018	-0.1431	0.0006	-0.1342	-0.0001
110	SLU 52	0.00867	-0.00017	-0.14944	0.0006	-0.1412	-0.0001
110	SLU 53	0.01006	-0.00015	-0.15895	0.0006	-0.1518	-0.0001
110	SLU 54	0.01006	-0.00015	-0.15895	0.0006	-0.1518	-0.0001
110	SLU 55	0.00911	-0.00018	-0.15522	0.0006	-0.1462	-0.0001
110	SLU 56	0.00911	-0.00018	-0.15522	0.0006	-0.1462	-0.0001
110	SLU 57	0.01003	-0.00017	-0.16156	0.0006	-0.1533	-0.0001
110	SLU 58	0.01003	-0.00017	-0.16156	0.0006	-0.1533	-0.0001
110	SLU 59	0.00783	-0.00039	-0.14784	0.0007	-0.1372	-0.0001
110	SLU 60	0.00783	-0.00039	-0.14784	0.0007	-0.1372	-0.0001
110	SLU 61	0.00875	-0.00038	-0.15418	0.0007	-0.1443	-0.0001
110	SLU 62	0.00875	-0.00038	-0.15418	0.0007	-0.1443	-0.0001
110	SLU 63	0.00919	-0.00039	-0.15996	0.0007	-0.1492	-0.0001
110	SLU 64	0.00919	-0.00039	-0.15996	0.0007	-0.1492	-0.0001
110	SLU 65	0.01011	-0.00038	-0.1663	0.0007	-0.1563	-0.0001
110	SLU 66	0.01011	-0.00038	-0.1663	0.0007	-0.1563	-0.0001
110	SLU 67	0.00705	-0.00005	-0.15566	0.0006	-0.1457	-0.0001
110	SLU 68	0.00705	-0.00005	-0.15566	0.0006	-0.1457	-0.0001
110	SLU 69	0.00797	-0.00004	-0.162	0.0006	-0.1528	-0.0001
110	SLU 70	0.00936	-0.00002	-0.17152	0.0006	-0.1634	-0.0001
110	SLU 71	0.00936	-0.00002	-0.17152	0.0006	-0.1634	-0.0001
110	SLU 72	0.00841	-0.00005	-0.16778	0.0006	-0.1577	-0.0001
110	SLU 73	0.00934	-0.00004	-0.17412	0.0006	-0.1648	-0.0001
110	SLU 74	0.01072	-0.00002	-0.18363	0.0006	-0.1754	-0.0001
110	SLU 75	0.01072	-0.00003	-0.18363	0.0006	-0.1754	-0.0001
110	SLU 76	0.00977	-0.00005	-0.1799	0.0006	-0.1698	-0.0001
110	SLU 77	0.00977	-0.00005	-0.1799	0.0006	-0.1698	-0.0001
110	SLU 78	0.0107	-0.00004	-0.18624	0.0006	-0.1768	-0.0001
110	SLU 79	0.0107	-0.00004	-0.18624	0.0006	-0.1768	-0.0001
110	SLU 80	0.00801	-0.00019	-0.1669	0.0007	-0.1558	-0.0001
110	SLU 81	0.00894	-0.00018	-0.17324	0.0007	-0.1628	-0.0001
110	SLU 82	0.01032	-0.00016	-0.18276	0.0007	-0.1734	-0.0001
110	SLU 83	0.01032	-0.00016	-0.18276	0.0007	-0.1734	-0.0001
110	SLU 84	0.00937	-0.00019	-0.17902	0.0007	-0.1678	-0.0001
110	SLU 85	0.0103	-0.00018	-0.18536	0.0007	-0.1749	-0.0001
110	SLU 86	0.01169	-0.00017	-0.19487	0.0007	-0.1855	-0.0001
110	SLU 87	0.01169	-0.00017	-0.19487	0.0007	-0.1855	-0.0001
110	SLU 88	0.01073	-0.00019	-0.19114	0.0007	-0.1798	-0.0001
110	SLU 89	0.01073	-0.0002	-0.19114	0.0007	-0.1798	-0.0001
110	SLU 90	0.01166	-0.00018	-0.19748	0.0007	-0.1869	-0.0002
110	SLU 91	0.01166	-0.00018	-0.19748	0.0007	-0.1869	-0.0002
110	SLU 92	0.00945	-0.0004	-0.18376	0.0008	-0.1708	-0.0002
110	SLU 93	0.00945	-0.0004	-0.18376	0.0008	-0.1708	-0.0002
110	SLU 94	0.01038	-0.00039	-0.1901	0.0008	-0.1779	-0.0002
110	SLU 95	0.01038	-0.00039	-0.1901	0.0008	-0.1779	-0.0002
110	SLU 96	0.01081	-0.0004	-0.19588	0.0008	-0.1829	-0.0002
110	SLU 97	0.01081	-0.0004	-0.19588	0.0008	-0.1829	-0.0002
110	SLU 98	0.01174	-0.00039	-0.20222	0.0008	-0.1899	-0.0002
110	SLU 99	0.01174	-0.00039	-0.20222	0.0008	-0.1899	-0.0002
110	SLU 100	0.00705	-0.00005	-0.15566	0.0006	-0.1457	-0.0001
110	SLU 101	0.00705	-0.00005	-0.15566	0.0006	-0.1457	-0.0001
110	SLU 102	0.00797	-0.00004	-0.162	0.0006	-0.1528	-0.0001
110	SLU 103	0.00936	-0.00002	-0.17152	0.0006	-0.1634	-0.0001
110	SLU 104	0.00936	-0.00002	-0.17152	0.0006	-0.1634	-0.0001
110	SLU 105	0.00841	-0.00005	-0.16778	0.0006	-0.1577	-0.0001
110	SLU 106	0.00934	-0.00004	-0.17412	0.0006	-0.1648	-0.0001
110	SLU 107	0.01072	-0.00002	-0.18363	0.0006	-0.1754	-0.0001
110	SLU 108	0.01072	-0.00003	-0.18363	0.0006	-0.1754	-0.0001
110	SLU 109	0.00977	-0.00005	-0.1799	0.0006	-0.1698	-0.0001
110	SLU 110	0.00977	-0.00005	-0.1799	0.0006	-0.1698	-0.0001
110	SLU 111	0.0107	-0.00004	-0.18624	0.0006	-0.1768	-0.0001
110	SLU 112	0.0107	-0.00004	-0.18624	0.0006	-0.1768	-0.0001
110	SLU 113	0.00801	-0.00019	-0.1669	0.0007	-0.1558	-0.0001
110	SLU 114	0.00894	-0.00018	-0.17324	0.0007	-0.1628	-0.0001
110	SLU 115	0.01032	-0.00016	-0.18276	0.0007	-0.1734	-0.0001
110	SLU 116	0.01032	-0.00016	-0.18276	0.0007	-0.1734	-0.0001
110	SLU 117	0.00937	-0.00019	-0.17902	0.0007	-0.1678	-0.0001
110	SLU 118	0.0103	-0.00018	-0.18536	0.0007	-0.1749	-0.0001
110	SLU 119	0.01169	-0.00017	-0.19487	0.0007	-0.1855	-0.0001
110	SLU 120	0.01169	-0.00017	-0.19487	0.0007	-0.1855	-0.0001
110	SLU 121	0.01073	-0.00019	-0.19114	0.0007	-0.1798	-0.0001
110	SLU 122	0.01073	-0.0002	-0.19114	0.0007	-0.1798	-0.0001
110	SLU 123	0.01166	-0.00018	-0.19748	0.0007	-0.1869	-0.0002
110	SLU 124	0.01166	-0.00018	-0.19748	0.0007	-0.1869	-0.0002
110	SLU 125	0.00945	-0.0004	-0.18376	0.0008	-0.1708	-0.0002
110	SLU 126	0.00945	-0.0004	-0.18376	0.0008	-0.1708	-0.0002
110	SLU 127	0.01038	-0.00039	-0.1901	0.0008	-0.1779	-0.0002
110	SLU 128	0.01038	-0.00039	-0.1901	0.0008	-0.1779	-0.0002
110	SLU 129	0.01081	-0.0004	-0.19588	0.0008	-0.1829	-0.0002
110	SLU 130	0.01081	-0.0004	-0.19588	0.0008	-0.1829	-0.0002
110	SLU 131	0.01174	-0.00039	-0.20222	0.0008	-0.1899	-0.0002
110	SLU 132	0.01174	-0.00039	-0.20222	0.0008	-0.1899	-0.0002
110	SLE RA 1	0.00542	-0.00004	-0.11974	0.0005	-0.1121	-0.0001
110	SLE RA 2	0.00542	-0.00004	-0.11974	0.0005	-0.1121	-0.0001
110	SLE RA 3	0.00604	-0.00003	-0.12397	0.0005	-0.1168	-0.0001
110	SLE RA 4	0.00696	-0.00002	-0.13031	0.0005	-0.1239	-0.0001
110	SLE RA 5	0.00696	-0.00002	-0.13031	0.0005	-0.1239	-0.0001
110	SLE RA 6	0.00633	-0.00004	-0.12782	0.0005	-0.1201	-0.0001
110	SLE RA 7	0.00695	-0.00003	-0.13205	0.0005	-0.1248	-0.0001
110	SLE RA 8	0.00787	-0.00002	-0.13839	0.0005	-0.1319	-0.0001
110	SLE RA 9	0.00787	-0.00002	-0.13839	0.0005	-0.1319	-0.0001
110	SLE RA 10	0.00724	-0.00004	-0.1359	0.0005	-0.1281	-0.0001
110	SLE RA 11	0.00724	-0.00004	-0.1359	0.0005	-0.1281	-0.0001
110	SLE RA 12	0.00785	-0.00003	-0.14013	0.0005	-0.1328	-0.0001
110	SLE RA 13	0.00785	-0.00003	-0.14013	0.0005	-0.1328	-0.0001

Nodo	Cont.	Spostamento			Rotazione		
Ind.	N.br.	ux	uy	uz	rx	ry	rz
110	SLE RA 14	0.00606	-0.00013	-0.12723	0.0005	-0.1188	-0.0001
110	SLE RA 15	0.00668	-0.00013	-0.13146	0.0005	-0.1235	-0.0001
110	SLE RA 16	0.00761	-0.00011	-0.1378	0.0005	-0.1306	-0.0001
110	SLE RA 17	0.00761	-0.00011	-0.1378	0.0005	-0.1306	-0.0001
110	SLE RA 18	0.00697	-0.00013	-0.13531	0.0005	-0.1268	-0.0001
110	SLE RA 19	0.00759	-0.00013	-0.13954	0.0005	-0.1315	-0.0001
110	SLE RA 20	0.00851	-0.00012	-0.14588	0.0005	-0.1386	-0.0001
110	SLE RA 21	0.00851	-0.00012	-0.14588	0.0005	-0.1386	-0.0001
110	SLE RA 22	0.00788	-0.00014	-0.14339	0.0005	-0.1348	-0.0001
110	SLE RA 23	0.00788	-0.00014	-0.14339	0.0005	-0.1348	-0.0001
110	SLE RA 24	0.0085	-0.00013	-0.14762	0.0005	-0.1395	-0.0001
110	SLE RA 25	0.0085	-0.00013	-0.14762	0.0005	-0.1395	-0.0001
110	SLE RA 26	0.00702	-0.00027	-0.13847	0.0006	-0.1288	-0.0001
110	SLE RA 27	0.00702	-0.00027	-0.13847	0.0006	-0.1288	-0.0001
110	SLE RA 28	0.00764	-0.00027	-0.1427	0.0006	-0.1335	-0.0001
110	SLE RA 29	0.00764	-0.00027	-0.1427	0.0006	-0.1335	-0.0001
110	SLE RA 30	0.00793	-0.00027	-0.14655	0.0006	-0.1369	-0.0001
110	SLE RA 31	0.00793	-0.00028	-0.14655	0.0006	-0.1369	-0.0001
110	SLE RA 32	0.00855	-0.00027	-0.15078	0.0006	-0.1416	-0.0001
110	SLE RA 33	0.00855	-0.00027	-0.15078	0.0006	-0.1416	-0.0001
110	SLE FR 1	0.00542	-0.00004	-0.11974	0.0005	-0.1121	-0.0001
110	SLE FR 2	0.00542	-0.00004	-0.11974	0.0005	-0.1121	-0.0001
110	SLE FR 3	0.00604	-0.00003	-0.12397	0.0005	-0.1168	-0.0001
110	SLE FR 4	0.00578	-0.00004	-0.12297	0.0005	-0.1153	-0.0001
110	SLE FR 5	0.00606	-0.00013	-0.12723	0.0005	-0.1188	-0.0001
110	SLE QP 1	0.00542	-0.00004	-0.11974	0.0005	-0.1121	-0.0001
110	SLO 1	-0.1358	-0.32022	-0.21916	0.2826	-0.1067	0.0083
110	SLO 2	-0.1358	-0.32022	-0.21916	0.2826	-0.1067	0.0083
110	SLO 3	-0.1358	0.32014	-0.21916	-0.2817	-0.1067	-0.0085
110	SLO 4	-0.1358	0.32014	-0.21916	-0.2817	-0.1067	-0.0085
110	SLO 5	-0.03694	-1.06732	-0.14956	0.941	-0.1104	0.0279
110	SLO 6	-0.03694	-1.06732	-0.14956	0.941	-0.1104	0.0279
110	SLO 7	-0.03694	1.06724	-0.14956	-0.9401	-0.1104	-0.0281
110	SLO 8	-0.03694	1.06724	-0.14956	-0.9401	-0.1104	-0.0281
110	SLO 9	0.04779	-1.06732	-0.08991	0.941	-0.1137	0.0279
110	SLO 10	0.04779	-1.06732	-0.08991	0.941	-0.1137	0.0279
110	SLO 11	0.04779	1.06724	-0.08991	-0.9401	-0.1137	-0.0281
110	SLO 12	0.04779	1.06724	-0.08991	-0.9401	-0.1137	-0.0281
110	SLO 13	0.14664	-0.32022	-0.02032	0.2826	-0.1175	0.0083
110	SLO 14	0.14664	-0.32022	-0.02032	0.2826	-0.1175	0.0083
110	SLO 15	0.14664	0.32014	-0.02032	-0.2817	-0.1175	-0.0085
110	SLO 16	0.14664	0.32014	-0.02032	-0.2817	-0.1175	-0.0085
110	SLD 1	-0.11046	-0.29589	-0.20132	0.2612	-0.1076	0.0077
110	SLD 2	-0.11046	-0.29589	-0.20132	0.2612	-0.1076	0.0077
110	SLD 3	-0.11046	0.29581	-0.20132	-0.2603	-0.1076	-0.0079
110	SLD 4	-0.11046	0.29581	-0.20132	-0.2603	-0.1076	-0.0079
110	SLD 5	-0.02934	-0.98619	-0.14421	0.8695	-0.1107	0.0258
110	SLD 6	-0.02934	-0.98619	-0.14421	0.8695	-0.1107	0.0258
110	SLD 7	-0.02934	0.98611	-0.14421	-0.8686	-0.1107	-0.026
110	SLD 8	-0.02934	0.98611	-0.14421	-0.8686	-0.1107	-0.026
110	SLD 9	0.04018	-0.98619	-0.09527	0.8695	-0.1134	0.0258
110	SLD 10	0.04018	-0.98619	-0.09527	0.8695	-0.1134	0.0258
110	SLD 11	0.04018	0.98611	-0.09527	-0.8686	-0.1134	-0.026
110	SLD 12	0.04018	0.98611	-0.09527	-0.8686	-0.1134	-0.026
110	SLD 13	0.1213	-0.29588	-0.03816	0.2612	-0.1165	0.0077
110	SLD 14	0.1213	-0.29588	-0.03816	0.2612	-0.1165	0.0077
110	SLD 15	0.1213	0.29581	-0.03816	-0.2603	-0.1165	-0.0079
110	SLD 16	0.1213	0.29581	-0.03816	-0.2603	-0.1165	-0.0079
110	SLV 1	-0.25345	-0.78034	-0.30198	0.6881	-0.1021	0.0204
110	SLV 2	-0.25345	-0.78034	-0.30198	0.6881	-0.1021	0.0204
110	SLV 3	-0.25345	0.78026	-0.30198	-0.6872	-0.1021	-0.0206
110	SLV 4	-0.25345	0.78026	-0.30198	-0.6872	-0.1021	-0.0206
110	SLV 5	-0.07224	-2.60103	-0.17441	2.2926	-0.1091	0.0682
110	SLV 6	-0.07224	-2.60103	-0.17441	2.2926	-0.1091	0.0682
110	SLV 7	-0.07224	2.60095	-0.17441	-2.2917	-0.1091	-0.0684
110	SLV 8	-0.07224	2.60095	-0.17441	-2.2917	-0.1091	-0.0684
110	SLV 9	0.08308	-2.60103	-0.06507	2.2926	-0.1151	0.0682
110	SLV 10	0.08308	-2.60103	-0.06507	2.2926	-0.1151	0.0682
110	SLV 11	0.08308	2.60095	-0.06507	-2.2917	-0.1151	-0.0684
110	SLV 12	0.08308	2.60095	-0.06507	-2.2917	-0.1151	-0.0684
110	SLV 13	0.26429	-0.78034	0.0625	0.6881	-0.122	0.0204
110	SLV 14	0.26429	-0.78034	0.0625	0.6881	-0.122	0.0204
110	SLV 15	0.26429	0.78026	0.0625	-0.6872	-0.122	-0.0206
110	SLV 16	0.26429	0.78026	0.0625	-0.6872	-0.122	-0.0206
111	SLU 1	-0.0056	-0.00005	-0.12074	0.0008	0.1119	0.0002
111	SLU 2	-0.0056	-0.00005	-0.12074	0.0008	0.1119	0.0002
111	SLU 3	-0.00606	-0.00004	-0.12393	0.0008	0.1154	0.0002
111	SLU 4	-0.00676	-0.00002	-0.12873	0.0008	0.1207	0.0002
111	SLU 5	-0.00676	-0.00002	-0.12873	0.0008	0.1207	0.0002
111	SLU 6	-0.00608	-0.00005	-0.12704	0.0008	0.1179	0.0002
111	SLU 7	-0.00655	-0.00004	-0.13024	0.0008	0.1215	0.0002
111	SLU 8	-0.00725	-0.00002	-0.13504	0.0008	0.1268	0.0002
111	SLU 9	-0.00725	-0.00002	-0.13504	0.0008	0.1268	0.0002
111	SLU 10	-0.00657	-0.00005	-0.13335	0.0008	0.124	0.0002
111	SLU 11	-0.00657	-0.00005	-0.13335	0.0008	0.124	0.0002
111	SLU 12	-0.00704	-0.00004	-0.13655	0.0008	0.1275	0.0002
111	SLU 13	-0.00704	-0.00004	-0.13655	0.0008	0.1275	0.0002
111	SLU 14	-0.00575	-0.00019	-0.12673	0.0009	0.1169	0.0002
111	SLU 15	-0.00622	-0.00018	-0.12993	0.0009	0.1205	0.0002
111	SLU 16	-0.00691	-0.00016	-0.13472	0.0009	0.1258	0.0002
111	SLU 17	-0.00691	-0.00016	-0.13472	0.0009	0.1258	0.0002
111	SLU 18	-0.00624	-0.00019	-0.13304	0.0009	0.123	0.0002
111	SLU 19	-0.0067	-0.00018	-0.13623	0.0009	0.1265	0.0002
111	SLU 20	-0.0074	-0.00016	-0.14103	0.0009	0.1318	0.0002
111	SLU 21	-0.0074	-0.00016	-0.14103	0.0009	0.1318	0.0002

Nodo	Cont.	Spostamento			Rotazione		
Ind.	N.br.	ux	uy	uz	rx	ry	rz
111	SLU 22	-0.00673	-0.00019	-0.13934	0.0009	0.129	0.0002
111	SLU 23	-0.00673	-0.00019	-0.13934	0.0009	0.129	0.0002
111	SLU 24	-0.00719	-0.00018	-0.14254	0.0009	0.1326	0.0002
111	SLU 25	-0.00719	-0.00018	-0.14254	0.0009	0.1326	0.0002
111	SLU 26	-0.00598	-0.0004	-0.13572	0.001	0.1245	0.0002
111	SLU 27	-0.00598	-0.0004	-0.13572	0.001	0.1245	0.0002
111	SLU 28	-0.00645	-0.00039	-0.13892	0.001	0.1281	0.0002
111	SLU 29	-0.00645	-0.00039	-0.13892	0.001	0.1281	0.0002
111	SLU 30	-0.00647	-0.0004	-0.14203	0.001	0.1306	0.0003
111	SLU 31	-0.00647	-0.0004	-0.14203	0.001	0.1306	0.0003
111	SLU 32	-0.00694	-0.00039	-0.14522	0.001	0.1341	0.0003
111	SLU 33	-0.00694	-0.00039	-0.14522	0.001	0.1341	0.0003
111	SLU 34	-0.0056	-0.00005	-0.12074	0.0008	0.1119	0.0002
111	SLU 35	-0.0056	-0.00005	-0.12074	0.0008	0.1119	0.0002
111	SLU 36	-0.00606	-0.00004	-0.12393	0.0008	0.1154	0.0002
111	SLU 37	-0.00676	-0.00002	-0.12873	0.0008	0.1207	0.0002
111	SLU 38	-0.00676	-0.00002	-0.12873	0.0008	0.1207	0.0002
111	SLU 39	-0.00608	-0.00005	-0.12704	0.0008	0.1179	0.0002
111	SLU 40	-0.00655	-0.00004	-0.13024	0.0008	0.1215	0.0002
111	SLU 41	-0.00725	-0.00002	-0.13504	0.0008	0.1268	0.0002
111	SLU 42	-0.00725	-0.00002	-0.13504	0.0008	0.1268	0.0002
111	SLU 43	-0.00657	-0.00005	-0.13335	0.0008	0.124	0.0002
111	SLU 44	-0.00657	-0.00005	-0.13335	0.0008	0.124	0.0002
111	SLU 45	-0.00704	-0.00004	-0.13655	0.0008	0.1275	0.0002
111	SLU 46	-0.00704	-0.00004	-0.13655	0.0008	0.1275	0.0002
111	SLU 47	-0.00575	-0.00019	-0.12673	0.0009	0.1169	0.0002
111	SLU 48	-0.00622	-0.00018	-0.12993	0.0009	0.1205	0.0002
111	SLU 49	-0.00691	-0.00016	-0.13472	0.0009	0.1258	0.0002
111	SLU 50	-0.00691	-0.00016	-0.13472	0.0009	0.1258	0.0002
111	SLU 51	-0.00624	-0.00019	-0.13304	0.0009	0.123	0.0002
111	SLU 52	-0.0067	-0.00018	-0.13623	0.0009	0.1265	0.0002
111	SLU 53	-0.0074	-0.00016	-0.14103	0.0009	0.1318	0.0002
111	SLU 54	-0.0074	-0.00016	-0.14103	0.0009	0.1318	0.0002
111	SLU 55	-0.00673	-0.00019	-0.13934	0.0009	0.129	0.0002
111	SLU 56	-0.00673	-0.00019	-0.13934	0.0009	0.129	0.0002
111	SLU 57	-0.00719	-0.00018	-0.14254	0.0009	0.1326	0.0002
111	SLU 58	-0.00719	-0.00018	-0.14254	0.0009	0.1326	0.0002
111	SLU 59	-0.00598	-0.0004	-0.13572	0.001	0.1245	0.0002
111	SLU 60	-0.00598	-0.0004	-0.13572	0.001	0.1245	0.0002
111	SLU 61	-0.00645	-0.00039	-0.13892	0.001	0.1281	0.0002
111	SLU 62	-0.00645	-0.00039	-0.13892	0.001	0.1281	0.0002
111	SLU 63	-0.00647	-0.0004	-0.14203	0.001	0.1306	0.0003
111	SLU 64	-0.00647	-0.0004	-0.14203	0.001	0.1306	0.0003
111	SLU 65	-0.00694	-0.00039	-0.14522	0.001	0.1341	0.0003
111	SLU 66	-0.00694	-0.00039	-0.14522	0.001	0.1341	0.0003
111	SLU 67	-0.00728	-0.00006	-0.15696	0.001	0.1454	0.0003
111	SLU 68	-0.00728	-0.00006	-0.15696	0.001	0.1454	0.0003
111	SLU 69	-0.00774	-0.00005	-0.16016	0.001	0.149	0.0003
111	SLU 70	-0.00844	-0.00004	-0.16495	0.001	0.1543	0.0003
111	SLU 71	-0.00844	-0.00004	-0.16495	0.001	0.1543	0.0003
111	SLU 72	-0.00776	-0.00007	-0.16326	0.001	0.1515	0.0003
111	SLU 73	-0.00823	-0.00005	-0.16646	0.001	0.155	0.0003
111	SLU 74	-0.00893	-0.00004	-0.17126	0.001	0.1604	0.0003
111	SLU 75	-0.00893	-0.00004	-0.17126	0.001	0.1604	0.0003
111	SLU 76	-0.00825	-0.00007	-0.16957	0.001	0.1575	0.0003
111	SLU 77	-0.00825	-0.00007	-0.16957	0.001	0.1575	0.0003
111	SLU 78	-0.00872	-0.00006	-0.17277	0.0011	0.1611	0.0003
111	SLU 79	-0.00872	-0.00006	-0.17277	0.001	0.1611	0.0003
111	SLU 80	-0.00743	-0.0002	-0.16295	0.0011	0.1505	0.0003
111	SLU 81	-0.0079	-0.00019	-0.16615	0.0011	0.1541	0.0003
111	SLU 82	-0.00859	-0.00018	-0.17095	0.0011	0.1594	0.0003
111	SLU 83	-0.00859	-0.00018	-0.17095	0.0011	0.1594	0.0003
111	SLU 84	-0.00792	-0.00021	-0.16926	0.0011	0.1566	0.0003
111	SLU 85	-0.00838	-0.0002	-0.17245	0.0011	0.1601	0.0003
111	SLU 86	-0.00908	-0.00018	-0.17725	0.0011	0.1654	0.0003
111	SLU 87	-0.00908	-0.00018	-0.17725	0.0011	0.1654	0.0003
111	SLU 88	-0.0084	-0.00021	-0.17556	0.0011	0.1626	0.0003
111	SLU 89	-0.0084	-0.00021	-0.17556	0.0011	0.1626	0.0003
111	SLU 90	-0.00887	-0.0002	-0.17876	0.0012	0.1661	0.0003
111	SLU 91	-0.00887	-0.0002	-0.17876	0.0011	0.1661	0.0003
111	SLU 92	-0.00766	-0.00041	-0.17194	0.0012	0.1581	0.0003
111	SLU 93	-0.00766	-0.00042	-0.17194	0.0012	0.1581	0.0003
111	SLU 94	-0.00813	-0.0004	-0.17514	0.0012	0.1616	0.0003
111	SLU 95	-0.00813	-0.0004	-0.17514	0.0012	0.1616	0.0003
111	SLU 96	-0.00815	-0.00042	-0.17825	0.0013	0.1641	0.0003
111	SLU 97	-0.00815	-0.00042	-0.17825	0.0013	0.1641	0.0003
111	SLU 98	-0.00861	-0.00041	-0.18144	0.0013	0.1677	0.0003
111	SLU 99	-0.00861	-0.00041	-0.18144	0.0013	0.1677	0.0003
111	SLU 100	-0.00728	-0.00006	-0.15696	0.001	0.1454	0.0003
111	SLU 101	-0.00728	-0.00006	-0.15696	0.001	0.1454	0.0003
111	SLU 102	-0.00774	-0.00005	-0.16016	0.001	0.149	0.0003
111	SLU 103	-0.00844	-0.00004	-0.16495	0.001	0.1543	0.0003
111	SLU 104	-0.00844	-0.00004	-0.16495	0.001	0.1543	0.0003
111	SLU 105	-0.00776	-0.00007	-0.16326	0.001	0.1515	0.0003
111	SLU 106	-0.00823	-0.00005	-0.16646	0.001	0.155	0.0003
111	SLU 107	-0.00893	-0.00004	-0.17126	0.001	0.1604	0.0003
111	SLU 108	-0.00893	-0.00004	-0.17126	0.001	0.1604	0.0003
111	SLU 109	-0.00825	-0.00007	-0.16957	0.001	0.1575	0.0003
111	SLU 110	-0.00825	-0.00007	-0.16957	0.001	0.1575	0.0003
111	SLU 111	-0.00872	-0.00006	-0.17277	0.0011	0.1611	0.0003
111	SLU 112	-0.00872	-0.00006	-0.17277	0.001	0.1611	0.0003
111	SLU 113	-0.00743	-0.0002	-0.16295	0.0011	0.1505	0.0003
111	SLU 114	-0.0079	-0.00019	-0.16615	0.0011	0.1541	0.0003
111	SLU 115	-0.00859	-0.00018	-0.17095	0.0011	0.1594	0.0003
111	SLU 116	-0.00859	-0.00018	-0.17095	0.0011	0.1594	0.0003

Nodo	Cont.	Spostamento			Rotazione		
Ind.	N.br.	ux	uy	uz	rx	ry	rz
111	SLU 117	-0.00792	-0.00021	-0.16926	0.0011	0.1566	0.0003
111	SLU 118	-0.00838	-0.0002	-0.17245	0.0011	0.1601	0.0003
111	SLU 119	-0.00908	-0.00018	-0.17725	0.0011	0.1654	0.0003
111	SLU 120	-0.00908	-0.00018	-0.17725	0.0011	0.1654	0.0003
111	SLU 121	-0.0084	-0.00021	-0.17556	0.0011	0.1626	0.0003
111	SLU 122	-0.0084	-0.00021	-0.17556	0.0011	0.1626	0.0003
111	SLU 123	-0.00887	-0.0002	-0.17876	0.0012	0.1661	0.0003
111	SLU 124	-0.00887	-0.0002	-0.17876	0.0011	0.1661	0.0003
111	SLU 125	-0.00766	-0.00041	-0.17194	0.0012	0.1581	0.0003
111	SLU 126	-0.00766	-0.00042	-0.17194	0.0012	0.1581	0.0003
111	SLU 127	-0.00813	-0.0004	-0.17514	0.0012	0.1616	0.0003
111	SLU 128	-0.00813	-0.0004	-0.17514	0.0012	0.1616	0.0003
111	SLU 129	-0.00815	-0.00042	-0.17825	0.0013	0.1641	0.0003
111	SLU 130	-0.00815	-0.00042	-0.17825	0.0013	0.1641	0.0003
111	SLU 131	-0.00861	-0.00041	-0.18144	0.0013	0.1677	0.0003
111	SLU 132	-0.00861	-0.00041	-0.18144	0.0013	0.1677	0.0003
111	SLE RA 1	-0.0056	-0.00005	-0.12074	0.0008	0.1119	0.0002
111	SLE RA 2	-0.0056	-0.00005	-0.12074	0.0008	0.1119	0.0002
111	SLE RA 3	-0.00591	-0.00004	-0.12287	0.0008	0.1142	0.0002
111	SLE RA 4	-0.00637	-0.00003	-0.12607	0.0008	0.1178	0.0002
111	SLE RA 5	-0.00637	-0.00003	-0.12607	0.0008	0.1178	0.0002
111	SLE RA 6	-0.00592	-0.00005	-0.12494	0.0008	0.1159	0.0002
111	SLE RA 7	-0.00623	-0.00004	-0.12707	0.0008	0.1183	0.0002
111	SLE RA 8	-0.0067	-0.00003	-0.13027	0.0008	0.1218	0.0002
111	SLE RA 9	-0.0067	-0.00003	-0.13027	0.0008	0.1218	0.0002
111	SLE RA 10	-0.00625	-0.00005	-0.12914	0.0008	0.1199	0.0002
111	SLE RA 11	-0.00625	-0.00005	-0.12914	0.0008	0.1199	0.0002
111	SLE RA 12	-0.00656	-0.00004	-0.13128	0.0008	0.1223	0.0002
111	SLE RA 13	-0.00656	-0.00004	-0.13128	0.0008	0.1223	0.0002
111	SLE RA 14	-0.0057	-0.00014	-0.12473	0.0008	0.1153	0.0002
111	SLE RA 15	-0.00601	-0.00014	-0.12686	0.0008	0.1176	0.0002
111	SLE RA 16	-0.00648	-0.00012	-0.13006	0.0008	0.1212	0.0002
111	SLE RA 17	-0.00648	-0.00012	-0.13006	0.0008	0.1212	0.0002
111	SLE RA 18	-0.00602	-0.00014	-0.12894	0.0008	0.1193	0.0002
111	SLE RA 19	-0.00633	-0.00014	-0.13107	0.0008	0.1216	0.0002
111	SLE RA 20	-0.0068	-0.00012	-0.13427	0.0009	0.1252	0.0002
111	SLE RA 21	-0.0068	-0.00013	-0.13427	0.0009	0.1252	0.0002
111	SLE RA 22	-0.00635	-0.00014	-0.13314	0.0009	0.1233	0.0002
111	SLE RA 23	-0.00635	-0.00014	-0.13314	0.0009	0.1233	0.0002
111	SLE RA 24	-0.00666	-0.00014	-0.13527	0.0009	0.1257	0.0002
111	SLE RA 25	-0.00666	-0.00014	-0.13527	0.0009	0.1257	0.0002
111	SLE RA 26	-0.00585	-0.00028	-0.13073	0.0009	0.1203	0.0002
111	SLE RA 27	-0.00585	-0.00028	-0.13073	0.0009	0.1203	0.0002
111	SLE RA 28	-0.00616	-0.00028	-0.13286	0.0009	0.1227	0.0002
111	SLE RA 29	-0.00616	-0.00028	-0.13286	0.0009	0.1227	0.0002
111	SLE RA 30	-0.00618	-0.00028	-0.13493	0.0009	0.1243	0.0002
111	SLE RA 31	-0.00618	-0.00028	-0.13493	0.0009	0.1243	0.0002
111	SLE RA 32	-0.00649	-0.00028	-0.13706	0.001	0.1267	0.0002
111	SLE RA 33	-0.00649	-0.00028	-0.13706	0.0009	0.1267	0.0002
111	SLE FR 1	-0.0056	-0.00005	-0.12074	0.0008	0.1119	0.0002
111	SLE FR 2	-0.0056	-0.00005	-0.12074	0.0008	0.1119	0.0002
111	SLE FR 3	-0.00591	-0.00004	-0.12287	0.0008	0.1142	0.0002
111	SLE FR 4	-0.00573	-0.00005	-0.12242	0.0008	0.1135	0.0002
111	SLE FR 5	-0.0057	-0.00014	-0.12473	0.0008	0.1153	0.0002
111	SLE QP 1	-0.0056	-0.00005	-0.12074	0.0008	0.1119	0.0002
111	SLO 1	-0.14427	-0.32021	-0.02308	0.2828	0.1172	-0.0082
111	SLO 2	-0.14427	-0.32021	-0.02308	0.2828	0.1172	-0.0082
111	SLO 3	-0.14427	0.32012	-0.02314	-0.2813	0.1172	0.0087
111	SLO 4	-0.14427	0.32012	-0.02314	-0.2813	0.1172	0.0087
111	SLO 5	-0.04719	-1.06727	-0.09135	0.9408	0.1135	-0.028
111	SLO 6	-0.04719	-1.06727	-0.09135	0.9408	0.1135	-0.028
111	SLO 7	-0.04721	1.06717	-0.09154	-0.9393	0.1135	0.0284
111	SLO 8	-0.04721	1.06717	-0.09154	-0.9393	0.1135	0.0284
111	SLO 9	0.03601	-1.06727	-0.14993	0.9408	0.1103	-0.028
111	SLO 10	0.03601	-1.06727	-0.14993	0.9408	0.1103	-0.028
111	SLO 11	0.036	1.06717	-0.15012	-0.9393	0.1103	0.0284
111	SLO 12	0.036	1.06717	-0.15012	-0.9393	0.1103	0.0284
111	SLO 13	0.13308	-0.32022	-0.21834	0.2828	0.1066	-0.0082
111	SLO 14	0.13308	-0.32022	-0.21834	0.2828	0.1066	-0.0082
111	SLO 15	0.13307	0.32012	-0.2184	-0.2812	0.1066	0.0087
111	SLO 16	0.13307	0.32012	-0.2184	-0.2812	0.1066	0.0087
111	SLD 1	-0.11938	-0.29588	-0.0406	0.2613	0.1162	-0.0076
111	SLD 2	-0.11938	-0.29588	-0.0406	0.2613	0.1162	-0.0076
111	SLD 3	-0.11939	0.29578	-0.04065	-0.2598	0.1163	0.008
111	SLD 4	-0.11939	0.29578	-0.04065	-0.2598	0.1163	0.008
111	SLD 5	-0.03972	-0.98615	-0.09661	0.8693	0.1132	-0.0258
111	SLD 6	-0.03972	-0.98615	-0.09661	0.8693	0.1132	-0.0258
111	SLD 7	-0.03974	0.98605	-0.09679	-0.8678	0.1132	0.0263
111	SLD 8	-0.03974	0.98605	-0.09679	-0.8678	0.1132	0.0263
111	SLD 9	0.02855	-0.98615	-0.14468	0.8694	0.1106	-0.0258
111	SLD 10	0.02855	-0.98615	-0.14468	0.8694	0.1106	-0.0258
111	SLD 11	0.02853	0.98605	-0.14486	-0.8678	0.1106	0.0263
111	SLD 12	0.02853	0.98605	-0.14486	-0.8678	0.1106	0.0263
111	SLD 13	0.10819	-0.29588	-0.20082	0.2613	0.1075	-0.0076
111	SLD 14	0.10819	-0.29588	-0.20082	0.2613	0.1075	-0.0076
111	SLD 15	0.10819	0.29578	-0.20087	-0.2598	0.1075	0.008
111	SLD 16	0.10819	0.29578	-0.20087	-0.2598	0.1075	0.008
111	SLV 1	-0.25979	-0.7803	0.0583	0.688	0.1216	-0.0204
111	SLV 2	-0.25979	-0.7803	0.0583	0.688	0.1216	-0.0204
111	SLV 3	-0.2598	0.78021	0.05816	-0.6865	0.1217	0.0208
111	SLV 4	-0.2598	0.78021	0.05816	-0.6865	0.1217	0.0208
111	SLV 5	-0.08183	-2.6009	-0.06681	2.2917	0.1148	-0.0685
111	SLV 6	-0.08183	-2.6009	-0.06681	2.2917	0.1148	-0.0685
111	SLV 7	-0.08188	2.6008	-0.06728	-2.2901	0.1149	0.069
111	SLV 8	-0.08188	2.6008	-0.06728	-2.2901	0.1149	0.069

Nodo	Cont.	Spostamento			Rotazione		
Ind.	N.br.	ux	uy	uz	rx	ry	rz
111	SLV 9	0.07068	-2.6009	-0.17419	2.2917	0.1089	-0.0685
111	SLV 10	0.07068	-2.6009	-0.17419	2.2917	0.1089	-0.0685
111	SLV 11	0.07064	2.6008	-0.17466	-2.2901	0.109	0.069
111	SLV 12	0.07064	2.6008	-0.17466	-2.2901	0.109	0.069
111	SLV 13	0.24861	-0.7803	-0.29963	0.688	0.1021	-0.0204
111	SLV 14	0.24861	-0.7803	-0.29963	0.688	0.1021	-0.0204
111	SLV 15	0.24859	0.78021	-0.29977	-0.6865	0.1021	0.0208
111	SLV 16	0.24859	0.78021	-0.29977	-0.6865	0.1021	0.0208
112	SLU 1	0.0056	-0.00005	-0.12074	0.0008	-0.1119	-0.0002
112	SLU 2	0.0056	-0.00005	-0.12074	0.0008	-0.1119	-0.0002
112	SLU 3	0.00606	-0.00004	-0.12393	0.0008	-0.1154	-0.0002
112	SLU 4	0.00676	-0.00002	-0.12873	0.0008	-0.1207	-0.0002
112	SLU 5	0.00676	-0.00002	-0.12873	0.0008	-0.1207	-0.0002
112	SLU 6	0.00633	-0.00005	-0.12684	0.0008	-0.1179	-0.0002
112	SLU 7	0.00679	-0.00004	-0.13003	0.0008	-0.1215	-0.0002
112	SLU 8	0.00749	-0.00002	-0.13483	0.0008	-0.1268	-0.0002
112	SLU 9	0.00749	-0.00002	-0.13483	0.0008	-0.1268	-0.0002
112	SLU 10	0.00706	-0.00005	-0.13294	0.0008	-0.124	-0.0002
112	SLU 11	0.00706	-0.00005	-0.13294	0.0008	-0.124	-0.0002
112	SLU 12	0.00753	-0.00004	-0.13613	0.0008	-0.1275	-0.0002
112	SLU 13	0.00753	-0.00004	-0.13613	0.0008	-0.1275	-0.0002
112	SLU 14	0.00616	-0.00019	-0.12639	0.0009	-0.1169	-0.0002
112	SLU 15	0.00663	-0.00018	-0.12958	0.0009	-0.1205	-0.0002
112	SLU 16	0.00732	-0.00016	-0.13438	0.0009	-0.1258	-0.0002
112	SLU 17	0.00732	-0.00016	-0.13438	0.0009	-0.1258	-0.0002
112	SLU 18	0.00689	-0.00019	-0.13248	0.0009	-0.123	-0.0002
112	SLU 19	0.00736	-0.00018	-0.13568	0.0009	-0.1265	-0.0002
112	SLU 20	0.00806	-0.00016	-0.14048	0.0009	-0.1318	-0.0002
112	SLU 21	0.00806	-0.00016	-0.14048	0.0009	-0.1318	-0.0002
112	SLU 22	0.00762	-0.00019	-0.13858	0.0009	-0.129	-0.0002
112	SLU 23	0.00762	-0.00019	-0.13858	0.0009	-0.129	-0.0002
112	SLU 24	0.00809	-0.00018	-0.14178	0.0009	-0.1326	-0.0002
112	SLU 25	0.00809	-0.00018	-0.14178	0.0009	-0.1326	-0.0002
112	SLU 26	0.007	-0.0004	-0.13486	0.001	-0.1245	-0.0002
112	SLU 27	0.007	-0.0004	-0.13486	0.001	-0.1245	-0.0002
112	SLU 28	0.00747	-0.00039	-0.13806	0.001	-0.1281	-0.0002
112	SLU 29	0.00747	-0.00039	-0.13806	0.001	-0.1281	-0.0002
112	SLU 30	0.00774	-0.0004	-0.14096	0.001	-0.1306	-0.0003
112	SLU 31	0.00774	-0.0004	-0.14096	0.001	-0.1306	-0.0003
112	SLU 32	0.0082	-0.00039	-0.14416	0.001	-0.1341	-0.0003
112	SLU 33	0.0082	-0.00039	-0.14416	0.001	-0.1341	-0.0003
112	SLU 34	0.0056	-0.00005	-0.12074	0.0008	-0.1119	-0.0002
112	SLU 35	0.0056	-0.00005	-0.12074	0.0008	-0.1119	-0.0002
112	SLU 36	0.00606	-0.00004	-0.12393	0.0008	-0.1154	-0.0002
112	SLU 37	0.00676	-0.00002	-0.12873	0.0008	-0.1207	-0.0002
112	SLU 38	0.00676	-0.00002	-0.12873	0.0008	-0.1207	-0.0002
112	SLU 39	0.00633	-0.00005	-0.12684	0.0008	-0.1179	-0.0002
112	SLU 40	0.00679	-0.00004	-0.13003	0.0008	-0.1215	-0.0002
112	SLU 41	0.00749	-0.00002	-0.13483	0.0008	-0.1268	-0.0002
112	SLU 42	0.00749	-0.00002	-0.13483	0.0008	-0.1268	-0.0002
112	SLU 43	0.00706	-0.00005	-0.13294	0.0008	-0.124	-0.0002
112	SLU 44	0.00706	-0.00005	-0.13294	0.0008	-0.124	-0.0002
112	SLU 45	0.00753	-0.00004	-0.13613	0.0008	-0.1275	-0.0002
112	SLU 46	0.00753	-0.00004	-0.13613	0.0008	-0.1275	-0.0002
112	SLU 47	0.00616	-0.00019	-0.12639	0.0009	-0.1169	-0.0002
112	SLU 48	0.00663	-0.00018	-0.12958	0.0009	-0.1205	-0.0002
112	SLU 49	0.00732	-0.00016	-0.13438	0.0009	-0.1258	-0.0002
112	SLU 50	0.00732	-0.00016	-0.13438	0.0009	-0.1258	-0.0002
112	SLU 51	0.00689	-0.00019	-0.13248	0.0009	-0.123	-0.0002
112	SLU 52	0.00736	-0.00018	-0.13568	0.0009	-0.1265	-0.0002
112	SLU 53	0.00806	-0.00016	-0.14048	0.0009	-0.1318	-0.0002
112	SLU 54	0.00806	-0.00016	-0.14048	0.0009	-0.1318	-0.0002
112	SLU 55	0.00762	-0.00019	-0.13858	0.0009	-0.129	-0.0002
112	SLU 56	0.00762	-0.00019	-0.13858	0.0009	-0.129	-0.0002
112	SLU 57	0.00809	-0.00018	-0.14178	0.0009	-0.1326	-0.0002
112	SLU 58	0.00809	-0.00018	-0.14178	0.0009	-0.1326	-0.0002
112	SLU 59	0.007	-0.0004	-0.13486	0.001	-0.1245	-0.0002
112	SLU 60	0.007	-0.0004	-0.13486	0.001	-0.1245	-0.0002
112	SLU 61	0.00747	-0.00039	-0.13806	0.001	-0.1281	-0.0002
112	SLU 62	0.00747	-0.00039	-0.13806	0.001	-0.1281	-0.0002
112	SLU 63	0.00774	-0.0004	-0.14096	0.001	-0.1306	-0.0003
112	SLU 64	0.00774	-0.0004	-0.14096	0.001	-0.1306	-0.0003
112	SLU 65	0.0082	-0.00039	-0.14416	0.001	-0.1341	-0.0003
112	SLU 66	0.0082	-0.00039	-0.14416	0.001	-0.1341	-0.0003
112	SLU 67	0.00728	-0.00006	-0.15696	0.001	-0.1454	-0.0003
112	SLU 68	0.00728	-0.00006	-0.15696	0.001	-0.1454	-0.0003
112	SLU 69	0.00774	-0.00005	-0.16016	0.001	-0.149	-0.0003
112	SLU 70	0.00844	-0.00004	-0.16495	0.001	-0.1543	-0.0003
112	SLU 71	0.00844	-0.00004	-0.16495	0.001	-0.1543	-0.0003
112	SLU 72	0.00801	-0.00007	-0.16306	0.001	-0.1515	-0.0003
112	SLU 73	0.00847	-0.00005	-0.16626	0.001	-0.155	-0.0003
112	SLU 74	0.00917	-0.00004	-0.17105	0.001	-0.1603	-0.0003
112	SLU 75	0.00917	-0.00004	-0.17105	0.001	-0.1603	-0.0003
112	SLU 76	0.00874	-0.00007	-0.16916	0.001	-0.1575	-0.0003
112	SLU 77	0.00874	-0.00007	-0.16916	0.001	-0.1575	-0.0003
112	SLU 78	0.00921	-0.00006	-0.17235	0.0011	-0.1611	-0.0003
112	SLU 79	0.00921	-0.00006	-0.17235	0.001	-0.1611	-0.0003
112	SLU 80	0.00784	-0.0002	-0.16261	0.0011	-0.1505	-0.0003
112	SLU 81	0.0083	-0.00019	-0.1658	0.0011	-0.1541	-0.0003
112	SLU 82	0.009	-0.00018	-0.1706	0.0011	-0.1594	-0.0003
112	SLU 83	0.009	-0.00018	-0.1706	0.0011	-0.1594	-0.0003
112	SLU 84	0.00857	-0.00021	-0.16871	0.0011	-0.1565	-0.0003
112	SLU 85	0.00904	-0.0002	-0.1719	0.0011	-0.1601	-0.0003
112	SLU 86	0.00973	-0.00018	-0.1767	0.0011	-0.1654	-0.0003
112	SLU 87	0.00973	-0.00018	-0.1767	0.0011	-0.1654	-0.0003

Nodo	Cont.	Spostamento			Rotazione		
Ind.	N.br.	ux	uy	uz	rx	ry	rz
112	SLU 88	0.0093	-0.00021	-0.1748	0.0011	-0.1626	-0.0003
112	SLU 89	0.0093	-0.00021	-0.1748	0.0011	-0.1626	-0.0003
112	SLU 90	0.00977	-0.0002	-0.178	0.0012	-0.1661	-0.0003
112	SLU 91	0.00977	-0.0002	-0.178	0.0011	-0.1661	-0.0003
112	SLU 92	0.00868	-0.00042	-0.17108	0.0012	-0.1581	-0.0003
112	SLU 93	0.00868	-0.00042	-0.17108	0.0012	-0.1581	-0.0003
112	SLU 94	0.00915	-0.0004	-0.17428	0.0012	-0.1616	-0.0003
112	SLU 95	0.00915	-0.0004	-0.17428	0.0012	-0.1616	-0.0003
112	SLU 96	0.00942	-0.00042	-0.17718	0.0013	-0.1641	-0.0003
112	SLU 97	0.00942	-0.00042	-0.17718	0.0013	-0.1641	-0.0003
112	SLU 98	0.00988	-0.00041	-0.18038	0.0013	-0.1677	-0.0003
112	SLU 99	0.00988	-0.00041	-0.18038	0.0013	-0.1677	-0.0003
112	SLU 100	0.00728	-0.00006	-0.15696	0.001	-0.1454	-0.0003
112	SLU 101	0.00728	-0.00006	-0.15696	0.001	-0.1454	-0.0003
112	SLU 102	0.00774	-0.00005	-0.16016	0.001	-0.149	-0.0003
112	SLU 103	0.00844	-0.00004	-0.16495	0.001	-0.1543	-0.0003
112	SLU 104	0.00844	-0.00004	-0.16495	0.001	-0.1543	-0.0003
112	SLU 105	0.00801	-0.00007	-0.16306	0.001	-0.1515	-0.0003
112	SLU 106	0.00847	-0.00005	-0.16626	0.001	-0.155	-0.0003
112	SLU 107	0.00917	-0.00004	-0.17105	0.001	-0.1603	-0.0003
112	SLU 108	0.00917	-0.00004	-0.17105	0.001	-0.1603	-0.0003
112	SLU 109	0.00874	-0.00007	-0.16916	0.001	-0.1575	-0.0003
112	SLU 110	0.00874	-0.00007	-0.16916	0.001	-0.1575	-0.0003
112	SLU 111	0.00921	-0.00006	-0.17235	0.0011	-0.1611	-0.0003
112	SLU 112	0.00921	-0.00006	-0.17235	0.001	-0.1611	-0.0003
112	SLU 113	0.00784	-0.0002	-0.16261	0.0011	-0.1505	-0.0003
112	SLU 114	0.0083	-0.00019	-0.1658	0.0011	-0.1541	-0.0003
112	SLU 115	0.009	-0.00018	-0.1706	0.0011	-0.1594	-0.0003
112	SLU 116	0.009	-0.00018	-0.1706	0.0011	-0.1594	-0.0003
112	SLU 117	0.00857	-0.00021	-0.16871	0.0011	-0.1565	-0.0003
112	SLU 118	0.00904	-0.0002	-0.1719	0.0011	-0.1601	-0.0003
112	SLU 119	0.00973	-0.00018	-0.1767	0.0011	-0.1654	-0.0003
112	SLU 120	0.00973	-0.00018	-0.1767	0.0011	-0.1654	-0.0003
112	SLU 121	0.0093	-0.00021	-0.1748	0.0011	-0.1626	-0.0003
112	SLU 122	0.0093	-0.00021	-0.1748	0.0011	-0.1626	-0.0003
112	SLU 123	0.00977	-0.0002	-0.178	0.0012	-0.1661	-0.0003
112	SLU 124	0.00977	-0.0002	-0.178	0.0011	-0.1661	-0.0003
112	SLU 125	0.00868	-0.00042	-0.17108	0.0012	-0.1581	-0.0003
112	SLU 126	0.00868	-0.00042	-0.17108	0.0012	-0.1581	-0.0003
112	SLU 127	0.00915	-0.0004	-0.17428	0.0012	-0.1616	-0.0003
112	SLU 128	0.00915	-0.0004	-0.17428	0.0012	-0.1616	-0.0003
112	SLU 129	0.00942	-0.00042	-0.17718	0.0013	-0.1641	-0.0003
112	SLU 130	0.00942	-0.00042	-0.17718	0.0013	-0.1641	-0.0003
112	SLU 131	0.00988	-0.00041	-0.18038	0.0013	-0.1677	-0.0003
112	SLU 132	0.00988	-0.00041	-0.18038	0.0013	-0.1677	-0.0003
112	SLE RA 1	0.0056	-0.00005	-0.12074	0.0008	-0.1119	-0.0002
112	SLE RA 2	0.0056	-0.00005	-0.12074	0.0008	-0.1119	-0.0002
112	SLE RA 3	0.00591	-0.00004	-0.12287	0.0008	-0.1142	-0.0002
112	SLE RA 4	0.00637	-0.00003	-0.12607	0.0008	-0.1178	-0.0002
112	SLE RA 5	0.00637	-0.00003	-0.12607	0.0008	-0.1178	-0.0002
112	SLE RA 6	0.00608	-0.00005	-0.1248	0.0008	-0.1159	-0.0002
112	SLE RA 7	0.0064	-0.00004	-0.12693	0.0008	-0.1183	-0.0002
112	SLE RA 8	0.00686	-0.00003	-0.13013	0.0008	-0.1218	-0.0002
112	SLE RA 9	0.00686	-0.00003	-0.13013	0.0008	-0.1218	-0.0002
112	SLE RA 10	0.00657	-0.00005	-0.12887	0.0008	-0.1199	-0.0002
112	SLE RA 11	0.00657	-0.00005	-0.12887	0.0008	-0.1199	-0.0002
112	SLE RA 12	0.00688	-0.00004	-0.131	0.0008	-0.1223	-0.0002
112	SLE RA 13	0.00688	-0.00004	-0.131	0.0008	-0.1223	-0.0002
112	SLE RA 14	0.00597	-0.00014	-0.1245	0.0008	-0.1153	-0.0002
112	SLE RA 15	0.00628	-0.00014	-0.12663	0.0008	-0.1176	-0.0002
112	SLE RA 16	0.00675	-0.00012	-0.12983	0.0008	-0.1212	-0.0002
112	SLE RA 17	0.00675	-0.00012	-0.12983	0.0008	-0.1212	-0.0002
112	SLE RA 18	0.00646	-0.00014	-0.12857	0.0008	-0.1193	-0.0002
112	SLE RA 19	0.00677	-0.00014	-0.1307	0.0008	-0.1216	-0.0002
112	SLE RA 20	0.00724	-0.00013	-0.1339	0.0009	-0.1252	-0.0002
112	SLE RA 21	0.00724	-0.00013	-0.1339	0.0009	-0.1252	-0.0002
112	SLE RA 22	0.00695	-0.00014	-0.13263	0.0009	-0.1233	-0.0002
112	SLE RA 23	0.00695	-0.00015	-0.13263	0.0009	-0.1233	-0.0002
112	SLE RA 24	0.00726	-0.00014	-0.13477	0.0009	-0.1257	-0.0002
112	SLE RA 25	0.00726	-0.00014	-0.13477	0.0009	-0.1257	-0.0002
112	SLE RA 26	0.00654	-0.00028	-0.13015	0.0009	-0.1203	-0.0002
112	SLE RA 27	0.00654	-0.00028	-0.13015	0.0009	-0.1203	-0.0002
112	SLE RA 28	0.00685	-0.00028	-0.13228	0.0009	-0.1227	-0.0002
112	SLE RA 29	0.00685	-0.00028	-0.13228	0.0009	-0.1227	-0.0002
112	SLE RA 30	0.00702	-0.00028	-0.13422	0.0009	-0.1243	-0.0002
112	SLE RA 31	0.00702	-0.00028	-0.13422	0.0009	-0.1243	-0.0002
112	SLE RA 32	0.00733	-0.00028	-0.13635	0.001	-0.1267	-0.0002
112	SLE RA 33	0.00733	-0.00028	-0.13635	0.0009	-0.1267	-0.0002
112	SLE FR 1	0.0056	-0.00005	-0.12074	0.0008	-0.1119	-0.0002
112	SLE FR 2	0.0056	-0.00005	-0.12074	0.0008	-0.1119	-0.0002
112	SLE FR 3	0.00591	-0.00004	-0.12287	0.0008	-0.1142	-0.0002
112	SLE FR 4	0.00579	-0.00005	-0.12236	0.0008	-0.1135	-0.0002
112	SLE FR 5	0.00597	-0.00014	-0.1245	0.0008	-0.1153	-0.0002
112	SLE QP 1	0.0056	-0.00005	-0.12074	0.0008	-0.1119	-0.0002
112	SLO 1	-0.13308	-0.32022	-0.21834	0.2828	-0.1066	0.0082
112	SLO 2	-0.13308	-0.32022	-0.21834	0.2828	-0.1066	0.0082
112	SLO 3	-0.13307	0.32012	-0.2184	-0.2812	-0.1066	-0.0087
112	SLO 4	-0.13307	0.32012	-0.2184	-0.2812	-0.1066	-0.0087
112	SLO 5	-0.03601	-1.06727	-0.14993	0.9408	-0.1103	0.028
112	SLO 6	-0.03601	-1.06727	-0.14993	0.9408	-0.1103	0.028
112	SLO 7	-0.036	1.06717	-0.15012	-0.9393	-0.1103	-0.0284
112	SLO 8	-0.036	1.06717	-0.15012	-0.9393	-0.1103	-0.0284
112	SLO 9	0.04719	-1.06727	-0.09135	0.9408	-0.1135	0.028
112	SLO 10	0.04719	-1.06727	-0.09135	0.9408	-0.1135	0.028
112	SLO 11	0.04721	1.06717	-0.09154	-0.9393	-0.1135	-0.0284

Nodo	Cont.	Spostamento			Rotazione		
Ind.	N.br.	ux	uy	uz	rx	ry	rz
112	SLO 12	0.04721	1.06717	-0.09154	-0.9393	-0.1135	-0.0284
112	SLO 13	0.14427	-0.32021	-0.02308	0.2828	-0.1172	0.0082
112	SLO 14	0.14427	-0.32021	-0.02308	0.2828	-0.1172	0.0082
112	SLO 15	0.14427	0.32012	-0.02314	-0.2813	-0.1172	-0.0087
112	SLO 16	0.14427	0.32012	-0.02314	-0.2813	-0.1172	-0.0087
112	SLD 1	-0.10819	-0.29588	-0.20082	0.2613	-0.1075	0.0076
112	SLD 2	-0.10819	-0.29588	-0.20082	0.2613	-0.1075	0.0076
112	SLD 3	-0.10819	0.29578	-0.20087	-0.2598	-0.1075	-0.008
112	SLD 4	-0.10819	0.29578	-0.20087	-0.2598	-0.1075	-0.008
112	SLD 5	-0.02855	-0.98615	-0.14468	0.8694	-0.1106	0.0258
112	SLD 6	-0.02855	-0.98615	-0.14468	0.8694	-0.1106	0.0258
112	SLD 7	-0.02853	0.98605	-0.14486	-0.8678	-0.1106	-0.0263
112	SLD 8	-0.02853	0.98605	-0.14486	-0.8678	-0.1106	-0.0263
112	SLD 9	0.03972	-0.98615	-0.09661	0.8693	-0.1132	0.0258
112	SLD 10	0.03972	-0.98615	-0.09661	0.8693	-0.1132	0.0258
112	SLD 11	0.03974	0.98605	-0.09679	-0.8678	-0.1132	-0.0263
112	SLD 12	0.03974	0.98605	-0.09679	-0.8678	-0.1132	-0.0263
112	SLD 13	0.11938	-0.29588	-0.0406	0.2613	-0.1162	0.0076
112	SLD 14	0.11938	-0.29588	-0.0406	0.2613	-0.1162	0.0076
112	SLD 15	0.11939	0.29578	-0.04065	-0.2598	-0.1163	-0.008
112	SLD 16	0.11939	0.29578	-0.04065	-0.2598	-0.1163	-0.008
112	SLV 1	-0.24861	-0.7803	-0.29963	0.688	-0.1021	0.0204
112	SLV 2	-0.24861	-0.7803	-0.29963	0.688	-0.1021	0.0204
112	SLV 3	-0.24859	0.78021	-0.29977	-0.6865	-0.1021	-0.0208
112	SLV 4	-0.24859	0.78021	-0.29977	-0.6865	-0.1021	-0.0208
112	SLV 5	-0.07068	-2.6009	-0.17419	2.2917	-0.1089	0.0685
112	SLV 6	-0.07068	-2.6009	-0.17419	2.2917	-0.1089	0.0685
112	SLV 7	-0.07064	2.6008	-0.17466	-2.2901	-0.109	-0.069
112	SLV 8	-0.07064	2.6008	-0.17466	-2.2901	-0.109	-0.069
112	SLV 9	0.08183	-2.6009	-0.06681	2.2917	-0.1148	0.0685
112	SLV 10	0.08183	-2.6009	-0.06681	2.2917	-0.1148	0.0685
112	SLV 11	0.08188	2.6008	-0.06728	-2.2901	-0.1149	-0.069
112	SLV 12	0.08188	2.6008	-0.06728	-2.2901	-0.1149	-0.069
112	SLV 13	0.25979	-0.7803	0.0583	0.688	-0.1216	0.0204
112	SLV 14	0.25979	-0.7803	0.0583	0.688	-0.1216	0.0204
112	SLV 15	0.2598	0.78021	0.05816	-0.6865	-0.1217	-0.0208
112	SLV 16	0.2598	0.78021	0.05816	-0.6865	-0.1217	-0.0208
113	SLU 1	0	-0.00001	-0.37671	-0.0003	0	0
113	SLU 2	0	-0.00001	-0.37671	-0.0003	0	0
113	SLU 3	0	0	-0.37671	-0.0003	0	0
113	SLU 4	0	0.00003	-0.37671	-0.0003	0	0
113	SLU 5	0	0.00003	-0.37671	-0.0003	0	0
113	SLU 6	0.00003	-0.00001	-0.39897	-0.0003	0	0
113	SLU 7	0.00003	0	-0.39897	-0.0003	0	0
113	SLU 8	0.00003	0.00003	-0.39897	-0.0004	0	0
113	SLU 9	0.00003	0.00003	-0.39897	-0.0004	0	0
113	SLU 10	0.00006	-0.00001	-0.42123	-0.0004	0	0
113	SLU 11	0.00006	-0.00001	-0.42123	-0.0004	0	0
113	SLU 12	0.00006	0.00001	-0.42123	-0.0004	0	0
113	SLU 13	0.00006	0	-0.42123	-0.0004	0	0
113	SLU 14	0.00005	-0.00017	-0.54949	-0.0003	0	0
113	SLU 15	0.00005	-0.00016	-0.54949	-0.0003	0	0
113	SLU 16	0.00005	-0.00014	-0.54949	-0.0003	0	0
113	SLU 17	0.00005	-0.00014	-0.54949	-0.0003	0	0
113	SLU 18	0.00008	-0.00017	-0.57175	-0.0003	0	0
113	SLU 19	0.00008	-0.00016	-0.57175	-0.0004	0	0
113	SLU 20	0.00008	-0.00014	-0.57175	-0.0004	0	0
113	SLU 21	0.00008	-0.00014	-0.57175	-0.0004	0	0
113	SLU 22	0.00012	-0.00017	-0.59401	-0.0004	-0.0001	0
113	SLU 23	0.00012	-0.00017	-0.59401	-0.0004	-0.0001	0
113	SLU 24	0.00012	-0.00016	-0.59401	-0.0004	-0.0001	0
113	SLU 25	0.00012	-0.00016	-0.59401	-0.0004	-0.0001	0
113	SLU 26	0.00013	-0.00041	-0.80866	-0.0003	-0.0001	0
113	SLU 27	0.00013	-0.00041	-0.80866	-0.0003	-0.0001	0
113	SLU 28	0.00013	-0.0004	-0.80866	-0.0003	-0.0001	0
113	SLU 29	0.00013	-0.0004	-0.80866	-0.0003	-0.0001	0
113	SLU 30	0.00016	-0.00041	-0.83092	-0.0004	-0.0001	0
113	SLU 31	0.00016	-0.00041	-0.83092	-0.0003	-0.0001	0
113	SLU 32	0.00016	-0.0004	-0.83092	-0.0004	-0.0001	0
113	SLU 33	0.00016	-0.0004	-0.83092	-0.0004	-0.0001	0
113	SLU 34	0	-0.00001	-0.37671	-0.0003	0	0
113	SLU 35	0	-0.00001	-0.37671	-0.0003	0	0
113	SLU 36	0	0	-0.37671	-0.0003	0	0
113	SLU 37	0	0.00003	-0.37671	-0.0003	0	0
113	SLU 38	0	0.00003	-0.37671	-0.0003	0	0
113	SLU 39	0.00003	-0.00001	-0.39897	-0.0003	0	0
113	SLU 40	0.00003	0	-0.39897	-0.0003	0	0
113	SLU 41	0.00003	0.00003	-0.39897	-0.0004	0	0
113	SLU 42	0.00003	0.00003	-0.39897	-0.0004	0	0
113	SLU 43	0.00006	-0.00001	-0.42123	-0.0004	0	0
113	SLU 44	0.00006	-0.00001	-0.42123	-0.0004	0	0
113	SLU 45	0.00006	0.00001	-0.42123	-0.0004	0	0
113	SLU 46	0.00006	0	-0.42123	-0.0004	0	0
113	SLU 47	0.00005	-0.00017	-0.54949	-0.0003	0	0
113	SLU 48	0.00005	-0.00016	-0.54949	-0.0003	0	0
113	SLU 49	0.00005	-0.00014	-0.54949	-0.0003	0	0
113	SLU 50	0.00005	-0.00014	-0.54949	-0.0003	0	0
113	SLU 51	0.00008	-0.00017	-0.57175	-0.0003	0	0
113	SLU 52	0.00008	-0.00016	-0.57175	-0.0004	0	0
113	SLU 53	0.00008	-0.00014	-0.57175	-0.0004	0	0
113	SLU 54	0.00008	-0.00014	-0.57175	-0.0004	0	0
113	SLU 55	0.00012	-0.00017	-0.59401	-0.0004	-0.0001	0
113	SLU 56	0.00012	-0.00017	-0.59401	-0.0004	-0.0001	0
113	SLU 57	0.00012	-0.00016	-0.59401	-0.0004	-0.0001	0
113	SLU 58	0.00012	-0.00016	-0.59401	-0.0004	-0.0001	0

Nodo	Cont.	Spostamento			Rotazione		
Ind.	N.br.	ux	uy	uz	rx	ry	rz
113	SLU 59	0.00013	-0.00041	-0.80866	-0.0003	-0.0001	0
113	SLU 60	0.00013	-0.00041	-0.80866	-0.0003	-0.0001	0
113	SLU 61	0.00013	-0.0004	-0.80866	-0.0003	-0.0001	0
113	SLU 62	0.00013	-0.0004	-0.80866	-0.0003	-0.0001	0
113	SLU 63	0.00016	-0.00041	-0.83092	-0.0004	-0.0001	0
113	SLU 64	0.00016	-0.00041	-0.83092	-0.0003	-0.0001	0
113	SLU 65	0.00016	-0.0004	-0.83092	-0.0004	-0.0001	0
113	SLU 66	0.00016	-0.0004	-0.83092	-0.0004	-0.0001	0
113	SLU 67	0	-0.00001	-0.48972	-0.0004	0	0
113	SLU 68	0	-0.00001	-0.48972	-0.0004	0	0
113	SLU 69	0	0	-0.48972	-0.0004	0	0
113	SLU 70	0	0.00002	-0.48972	-0.0004	0	0
113	SLU 71	0	0.00002	-0.48972	-0.0004	0	0
113	SLU 72	0.00003	-0.00001	-0.51198	-0.0004	0	0
113	SLU 73	0.00003	0	-0.51198	-0.0004	0	0
113	SLU 74	0.00003	0.00002	-0.51198	-0.0005	0	0
113	SLU 75	0.00003	0.00002	-0.51198	-0.0005	0	0
113	SLU 76	0.00006	-0.00001	-0.53424	-0.0005	0	0
113	SLU 77	0.00006	-0.00001	-0.53424	-0.0005	0	0
113	SLU 78	0.00006	0	-0.53424	-0.0005	0	0
113	SLU 79	0.00006	0	-0.53424	-0.0005	0	0
113	SLU 80	0.00005	-0.00017	-0.6625	-0.0004	0	0
113	SLU 81	0.00005	-0.00016	-0.6625	-0.0004	0	0
113	SLU 82	0.00005	-0.00014	-0.6625	-0.0005	0	0
113	SLU 83	0.00005	-0.00014	-0.6625	-0.0004	0	0
113	SLU 84	0.00008	-0.00017	-0.68476	-0.0004	0	0
113	SLU 85	0.00008	-0.00016	-0.68476	-0.0005	0	0
113	SLU 86	0.00008	-0.00014	-0.68476	-0.0005	0	0
113	SLU 87	0.00008	-0.00014	-0.68476	-0.0005	0	0
113	SLU 88	0.00012	-0.00017	-0.70702	-0.0005	-0.0001	0
113	SLU 89	0.00012	-0.00017	-0.70702	-0.0005	-0.0001	0
113	SLU 90	0.00012	-0.00016	-0.70702	-0.0005	-0.0001	0
113	SLU 91	0.00012	-0.00016	-0.70702	-0.0005	-0.0001	0
113	SLU 92	0.00013	-0.00041	-0.92168	-0.0004	-0.0001	0
113	SLU 93	0.00013	-0.00042	-0.92168	-0.0004	-0.0001	0
113	SLU 94	0.00013	-0.0004	-0.92168	-0.0004	-0.0001	0
113	SLU 95	0.00013	-0.0004	-0.92168	-0.0004	-0.0001	0
113	SLU 96	0.00016	-0.00041	-0.94394	-0.0005	-0.0001	0
113	SLU 97	0.00016	-0.00042	-0.94394	-0.0004	-0.0001	0
113	SLU 98	0.00016	-0.0004	-0.94394	-0.0005	-0.0001	0
113	SLU 99	0.00016	-0.0004	-0.94394	-0.0005	-0.0001	0
113	SLU 100	0	-0.00001	-0.48972	-0.0004	0	0
113	SLU 101	0	-0.00001	-0.48972	-0.0004	0	0
113	SLU 102	0	0	-0.48972	-0.0004	0	0
113	SLU 103	0	0.00002	-0.48972	-0.0004	0	0
113	SLU 104	0	0.00002	-0.48972	-0.0004	0	0
113	SLU 105	0.00003	-0.00001	-0.51198	-0.0004	0	0
113	SLU 106	0.00003	0	-0.51198	-0.0004	0	0
113	SLU 107	0.00003	0.00002	-0.51198	-0.0005	0	0
113	SLU 108	0.00003	0.00002	-0.51198	-0.0005	0	0
113	SLU 109	0.00006	-0.00001	-0.53424	-0.0005	0	0
113	SLU 110	0.00006	-0.00001	-0.53424	-0.0005	0	0
113	SLU 111	0.00006	0	-0.53424	-0.0005	0	0
113	SLU 112	0.00006	0	-0.53424	-0.0005	0	0
113	SLU 113	0.00005	-0.00017	-0.6625	-0.0004	0	0
113	SLU 114	0.00005	-0.00016	-0.6625	-0.0004	0	0
113	SLU 115	0.00005	-0.00014	-0.6625	-0.0005	0	0
113	SLU 116	0.00005	-0.00014	-0.6625	-0.0004	0	0
113	SLU 117	0.00008	-0.00017	-0.68476	-0.0004	0	0
113	SLU 118	0.00008	-0.00016	-0.68476	-0.0005	0	0
113	SLU 119	0.00008	-0.00014	-0.68476	-0.0005	0	0
113	SLU 120	0.00008	-0.00014	-0.68476	-0.0005	0	0
113	SLU 121	0.00012	-0.00017	-0.70702	-0.0005	-0.0001	0
113	SLU 122	0.00012	-0.00017	-0.70702	-0.0005	-0.0001	0
113	SLU 123	0.00012	-0.00016	-0.70702	-0.0005	-0.0001	0
113	SLU 124	0.00012	-0.00016	-0.70702	-0.0005	-0.0001	0
113	SLU 125	0.00013	-0.00041	-0.92168	-0.0004	-0.0001	0
113	SLU 126	0.00013	-0.00042	-0.92168	-0.0004	-0.0001	0
113	SLU 127	0.00013	-0.0004	-0.92168	-0.0004	-0.0001	0
113	SLU 128	0.00013	-0.0004	-0.92168	-0.0004	-0.0001	0
113	SLU 129	0.00016	-0.00041	-0.94394	-0.0005	-0.0001	0
113	SLU 130	0.00016	-0.00042	-0.94394	-0.0004	-0.0001	0
113	SLU 131	0.00016	-0.0004	-0.94394	-0.0005	-0.0001	0
113	SLU 132	0.00016	-0.0004	-0.94394	-0.0005	-0.0001	0
113	SLE RA 1	0	-0.00001	-0.37671	-0.0003	0	0
113	SLE RA 2	0	-0.00001	-0.37671	-0.0003	0	0
113	SLE RA 3	0	0	-0.37671	-0.0003	0	0
113	SLE RA 4	0	0.00001	-0.37671	-0.0003	0	0
113	SLE RA 5	0	0.00001	-0.37671	-0.0003	0	0
113	SLE RA 6	0.00002	-0.00001	-0.39155	-0.0003	0	0
113	SLE RA 7	0.00002	0	-0.39155	-0.0003	0	0
113	SLE RA 8	0.00002	0.00001	-0.39155	-0.0004	0	0
113	SLE RA 9	0.00002	0.00001	-0.39155	-0.0003	0	0
113	SLE RA 10	0.00004	-0.00001	-0.40639	-0.0003	0	0
113	SLE RA 11	0.00004	-0.00001	-0.40639	-0.0003	0	0
113	SLE RA 12	0.00004	0	-0.40639	-0.0004	0	0
113	SLE RA 13	0.00004	0	-0.40639	-0.0004	0	0
113	SLE RA 14	0.00004	-0.00012	-0.4919	-0.0003	0	0
113	SLE RA 15	0.00004	-0.00011	-0.4919	-0.0003	0	0
113	SLE RA 16	0.00004	-0.00009	-0.4919	-0.0003	0	0
113	SLE RA 17	0.00004	-0.00009	-0.4919	-0.0003	0	0
113	SLE RA 18	0.00006	-0.00012	-0.50674	-0.0003	0	0
113	SLE RA 19	0.00006	-0.00011	-0.50674	-0.0003	0	0
113	SLE RA 20	0.00006	-0.00009	-0.50674	-0.0004	0	0
113	SLE RA 21	0.00006	-0.00009	-0.50674	-0.0004	0	0

Nodo	Cont.	Spostamento			Rotazione		
Ind.	N.br.	ux	uy	uz	rx	ry	rz
113	SLE RA 22	0.00008	-0.00012	-0.52158	-0.0004	0	0
113	SLE RA 23	0.00008	-0.00012	-0.52158	-0.0003	0	0
113	SLE RA 24	0.00008	-0.00011	-0.52158	-0.0004	0	0
113	SLE RA 25	0.00008	-0.00011	-0.52158	-0.0004	0	0
113	SLE RA 26	0.00009	-0.00028	-0.66468	-0.0003	0	0
113	SLE RA 27	0.00009	-0.00028	-0.66468	-0.0003	0	0
113	SLE RA 28	0.00009	-0.00027	-0.66468	-0.0003	0	0
113	SLE RA 29	0.00009	-0.00027	-0.66468	-0.0003	0	0
113	SLE RA 30	0.00011	-0.00028	-0.67952	-0.0003	-0.0001	0
113	SLE RA 31	0.00011	-0.00028	-0.67952	-0.0003	-0.0001	0
113	SLE RA 32	0.00011	-0.00027	-0.67952	-0.0003	-0.0001	0
113	SLE RA 33	0.00011	-0.00027	-0.67952	-0.0003	-0.0001	0
113	SLE FR 1	0	-0.00001	-0.37671	-0.0003	0	0
113	SLE FR 2	0	-0.00001	-0.37671	-0.0003	0	0
113	SLE FR 3	0	0	-0.37671	-0.0003	0	0
113	SLE FR 4	0.00001	-0.00001	-0.38265	-0.0003	0	0
113	SLE FR 5	0.00004	-0.00012	-0.4919	-0.0003	0	0
113	SLE QP 1	0	-0.00001	-0.37671	-0.0003	0	0
113	SLO 1	-0.12771	-0.43508	-0.37675	0.314	0.0441	0
113	SLO 2	-0.12771	-0.43508	-0.37675	0.314	0.0441	0
113	SLO 3	-0.12771	0.43507	-0.37666	-0.3147	0.0441	0
113	SLO 4	-0.12771	0.43507	-0.37666	-0.3147	0.0441	0
113	SLO 5	-0.03831	-1.45026	-0.37686	1.0474	0.0132	0
113	SLO 6	-0.03831	-1.45026	-0.37686	1.0474	0.0132	0
113	SLO 7	-0.03831	1.45024	-0.37656	-1.0481	0.0132	0
113	SLO 8	-0.03831	1.45024	-0.37656	-1.0481	0.0132	0
113	SLO 9	0.03831	-1.45026	-0.37686	1.0474	-0.0132	0
113	SLO 10	0.03831	-1.45026	-0.37686	1.0474	-0.0132	0
113	SLO 11	0.03831	1.45024	-0.37656	-1.0481	-0.0132	0
113	SLO 12	0.03831	1.45024	-0.37656	-1.0481	-0.0132	0
113	SLO 13	0.12771	-0.43508	-0.37675	0.314	-0.0441	0
113	SLO 14	0.12771	-0.43508	-0.37675	0.314	-0.0441	0
113	SLO 15	0.12771	0.43507	-0.37666	-0.3147	-0.0441	0
113	SLO 16	0.12771	0.43507	-0.37666	-0.3147	-0.0441	0
113	SLD 1	-0.10479	-0.40201	-0.37675	0.2901	0.0362	0
113	SLD 2	-0.10479	-0.40201	-0.37675	0.2901	0.0362	0
113	SLD 3	-0.10479	0.402	-0.37667	-0.2908	0.0362	0
113	SLD 4	-0.10479	0.402	-0.37667	-0.2908	0.0362	0
113	SLD 5	-0.03144	-1.34002	-0.37685	0.9678	0.0109	0
113	SLD 6	-0.03144	-1.34002	-0.37685	0.9678	0.0109	0
113	SLD 7	-0.03144	1.34	-0.37657	-0.9684	0.0109	0
113	SLD 8	-0.03144	1.34	-0.37657	-0.9684	0.0109	0
113	SLD 9	0.03144	-1.34002	-0.37685	0.9678	-0.0109	0
113	SLD 10	0.03144	-1.34002	-0.37685	0.9678	-0.0109	0
113	SLD 11	0.03144	1.34	-0.37657	-0.9684	-0.0109	0
113	SLD 12	0.03144	1.34	-0.37657	-0.9684	-0.0109	0
113	SLD 13	0.10479	-0.40201	-0.37675	0.2901	-0.0362	0
113	SLD 14	0.10479	-0.40201	-0.37675	0.2901	-0.0362	0
113	SLD 15	0.10479	0.402	-0.37667	-0.2908	-0.0362	0
113	SLD 16	0.10479	0.402	-0.37667	-0.2908	-0.0362	0
113	SLV 1	-0.2341	-1.0603	-0.37682	0.7657	0.0809	0
113	SLV 2	-0.2341	-1.0603	-0.37682	0.7657	0.0809	0
113	SLV 3	-0.2341	1.06028	-0.3766	-0.7663	0.0809	0
113	SLV 4	-0.2341	1.06028	-0.3766	-0.7663	0.0809	0
113	SLV 5	-0.07023	-3.5343	-0.37707	2.553	0.0243	0
113	SLV 6	-0.07023	-3.5343	-0.37707	2.553	0.0243	0
113	SLV 7	-0.07023	3.53429	-0.37635	-2.5537	0.0243	0
113	SLV 8	-0.07023	3.53429	-0.37635	-2.5537	0.0243	0
113	SLV 9	0.07023	-3.5343	-0.37707	2.553	-0.0243	0
113	SLV 10	0.07023	-3.5343	-0.37707	2.553	-0.0243	0
113	SLV 11	0.07023	3.53429	-0.37635	-2.5537	-0.0243	0
113	SLV 12	0.07023	3.53429	-0.37635	-2.5537	-0.0243	0
113	SLV 13	0.2341	-1.0603	-0.37682	0.7657	-0.0809	0
113	SLV 14	0.2341	-1.0603	-0.37682	0.7657	-0.0809	0
113	SLV 15	0.2341	1.06028	-0.3766	-0.7663	-0.0809	0
113	SLV 16	0.2341	1.06028	-0.3766	-0.7663	-0.0809	0
114	SLU 1	0	-0.00001	-0.37611	0	0	0
114	SLU 2	0	-0.00001	-0.37611	0	0	0
114	SLU 3	0	0.00001	-0.37611	-0.0001	0	0
114	SLU 4	0	0.00003	-0.37611	-0.0001	0	0
114	SLU 5	0	0.00003	-0.37611	-0.0001	0	0
114	SLU 6	0.0001	-0.00001	-0.42043	0	0	0
114	SLU 7	0.0001	0.00001	-0.42043	-0.0001	0	0
114	SLU 8	0.0001	0.00003	-0.42043	-0.0001	0	0
114	SLU 9	0.0001	0.00003	-0.42043	-0.0001	0	0
114	SLU 10	0.0002	-0.00001	-0.46476	-0.0001	-0.0001	0
114	SLU 11	0.0002	-0.00001	-0.46476	-0.0001	-0.0001	0
114	SLU 12	0.0002	0.00001	-0.46476	-0.0001	-0.0001	0
114	SLU 13	0.0002	0.00001	-0.46476	-0.0001	-0.0001	0
114	SLU 14	0.00017	-0.00017	-0.72047	0	-0.0001	0
114	SLU 15	0.00017	-0.00015	-0.72047	0	-0.0001	0
114	SLU 16	0.00017	-0.00013	-0.72047	0	-0.0001	0
114	SLU 17	0.00017	-0.00013	-0.72047	0	-0.0001	0
114	SLU 18	0.00027	-0.00017	-0.76479	0	-0.0001	0
114	SLU 19	0.00027	-0.00016	-0.76479	0	-0.0001	0
114	SLU 20	0.00027	-0.00013	-0.76479	0	-0.0001	0
114	SLU 21	0.00027	-0.00013	-0.76479	0	-0.0001	0
114	SLU 22	0.00037	-0.00017	-0.80912	0	-0.0002	0
114	SLU 23	0.00037	-0.00017	-0.80912	0	-0.0002	0
114	SLU 24	0.00037	-0.00015	-0.80912	0	-0.0002	0
114	SLU 25	0.00037	-0.00016	-0.80912	0	-0.0002	0
114	SLU 26	0.00042	-0.00041	-1.23701	0.0001	-0.0002	0
114	SLU 27	0.00042	-0.00041	-1.23701	0.0001	-0.0002	0
114	SLU 28	0.00042	-0.0004	-1.23701	0.0001	-0.0002	0
114	SLU 29	0.00042	-0.0004	-1.23701	0.0001	-0.0002	0

Nodo	Cont.	Spostamento			Rotazione		
Ind.	N.br.	ux	uy	uz	rx	ry	rz
114	SLU 30	0.00052	-0.00041	-1.28134	0.0001	-0.0002	0
114	SLU 31	0.00052	-0.00041	-1.28134	0.0001	-0.0002	0
114	SLU 32	0.00052	-0.0004	-1.28134	0.0001	-0.0002	0
114	SLU 33	0.00052	-0.0004	-1.28134	0.0001	-0.0002	0
114	SLU 34	0	-0.00001	-0.37611	0	0	0
114	SLU 35	0	-0.00001	-0.37611	0	0	0
114	SLU 36	0	0.00001	-0.37611	-0.0001	0	0
114	SLU 37	0	0.00003	-0.37611	-0.0001	0	0
114	SLU 38	0	0.00003	-0.37611	-0.0001	0	0
114	SLU 39	0.0001	-0.00001	-0.42043	0	0	0
114	SLU 40	0.0001	0.00001	-0.42043	-0.0001	0	0
114	SLU 41	0.0001	0.00003	-0.42043	-0.0001	0	0
114	SLU 42	0.0001	0.00003	-0.42043	-0.0001	0	0
114	SLU 43	0.0002	-0.00001	-0.46476	-0.0001	-0.0001	0
114	SLU 44	0.0002	-0.00001	-0.46476	-0.0001	-0.0001	0
114	SLU 45	0.0002	0.00001	-0.46476	-0.0001	-0.0001	0
114	SLU 46	0.0002	0.00001	-0.46476	-0.0001	-0.0001	0
114	SLU 47	0.00017	-0.00017	-0.72047	0	-0.0001	0
114	SLU 48	0.00017	-0.00015	-0.72047	0	-0.0001	0
114	SLU 49	0.00017	-0.00013	-0.72047	0	-0.0001	0
114	SLU 50	0.00017	-0.00013	-0.72047	0	-0.0001	0
114	SLU 51	0.00027	-0.00017	-0.76479	0	-0.0001	0
114	SLU 52	0.00027	-0.00016	-0.76479	0	-0.0001	0
114	SLU 53	0.00027	-0.00013	-0.76479	0	-0.0001	0
114	SLU 54	0.00027	-0.00013	-0.76479	0	-0.0001	0
114	SLU 55	0.00037	-0.00017	-0.80912	0	-0.0002	0
114	SLU 56	0.00037	-0.00017	-0.80912	0	-0.0002	0
114	SLU 57	0.00037	-0.00015	-0.80912	0	-0.0002	0
114	SLU 58	0.00037	-0.00016	-0.80912	0	-0.0002	0
114	SLU 59	0.00042	-0.00041	-1.23701	0.0001	-0.0002	0
114	SLU 60	0.00042	-0.00041	-1.23701	0.0001	-0.0002	0
114	SLU 61	0.00042	-0.0004	-1.23701	0.0001	-0.0002	0
114	SLU 62	0.00042	-0.0004	-1.23701	0.0001	-0.0002	0
114	SLU 63	0.00052	-0.00041	-1.28134	0.0001	-0.0002	0
114	SLU 64	0.00052	-0.00041	-1.28134	0.0001	-0.0002	0
114	SLU 65	0.00052	-0.0004	-1.28134	0.0001	-0.0002	0
114	SLU 66	0.00052	-0.0004	-1.28134	0.0001	-0.0002	0
114	SLU 67	0	-0.00001	-0.48894	-0.0001	0	0
114	SLU 68	0	-0.00001	-0.48894	-0.0001	0	0
114	SLU 69	0	0	-0.48894	-0.0001	0	0
114	SLU 70	0	0.00003	-0.48894	-0.0001	0	0
114	SLU 71	0	0.00003	-0.48894	-0.0001	0	0
114	SLU 72	0.0001	-0.00001	-0.53326	-0.0001	0	0
114	SLU 73	0.0001	0	-0.53326	-0.0001	0	0
114	SLU 74	0.0001	0.00003	-0.53326	-0.0001	0	0
114	SLU 75	0.0001	0.00003	-0.53326	-0.0001	0	0
114	SLU 76	0.0002	-0.00001	-0.57759	-0.0001	-0.0001	0
114	SLU 77	0.0002	-0.00001	-0.57759	-0.0001	-0.0001	0
114	SLU 78	0.0002	0.00001	-0.57759	-0.0001	-0.0001	0
114	SLU 79	0.0002	0	-0.57759	-0.0001	-0.0001	0
114	SLU 80	0.00017	-0.00017	-0.8333	0	-0.0001	0
114	SLU 81	0.00017	-0.00016	-0.8333	0	-0.0001	0
114	SLU 82	0.00017	-0.00014	-0.8333	0	-0.0001	0
114	SLU 83	0.00017	-0.00014	-0.8333	0	-0.0001	0
114	SLU 84	0.00027	-0.00017	-0.87763	0	-0.0001	0
114	SLU 85	0.00027	-0.00016	-0.87763	0	-0.0001	0
114	SLU 86	0.00027	-0.00014	-0.87763	0	-0.0001	0
114	SLU 87	0.00027	-0.00014	-0.87763	0	-0.0001	0
114	SLU 88	0.00037	-0.00017	-0.92195	0	-0.0002	0
114	SLU 89	0.00037	-0.00017	-0.92195	0	-0.0002	0
114	SLU 90	0.00037	-0.00016	-0.92195	0	-0.0002	0
114	SLU 91	0.00037	-0.00016	-0.92195	0	-0.0002	0
114	SLU 92	0.00042	-0.00041	-1.34985	0.0001	-0.0002	0
114	SLU 93	0.00042	-0.00041	-1.34985	0.0001	-0.0002	0
114	SLU 94	0.00042	-0.0004	-1.34985	0.0001	-0.0002	0
114	SLU 95	0.00042	-0.0004	-1.34985	0.0001	-0.0002	0
114	SLU 96	0.00052	-0.00041	-1.39417	0.0001	-0.0002	0
114	SLU 97	0.00052	-0.00041	-1.39417	0.0001	-0.0002	0
114	SLU 98	0.00052	-0.0004	-1.39417	0.0001	-0.0002	0
114	SLU 99	0.00052	-0.0004	-1.39417	0.0001	-0.0002	0
114	SLU 100	0	-0.00001	-0.48894	-0.0001	0	0
114	SLU 101	0	-0.00001	-0.48894	-0.0001	0	0
114	SLU 102	0	0	-0.48894	-0.0001	0	0
114	SLU 103	0	0.00003	-0.48894	-0.0001	0	0
114	SLU 104	0	0.00003	-0.48894	-0.0001	0	0
114	SLU 105	0.0001	-0.00001	-0.53326	-0.0001	0	0
114	SLU 106	0.0001	0	-0.53326	-0.0001	0	0
114	SLU 107	0.0001	0.00003	-0.53326	-0.0001	0	0
114	SLU 108	0.0001	0.00003	-0.53326	-0.0001	0	0
114	SLU 109	0.0002	-0.00001	-0.57759	-0.0001	-0.0001	0
114	SLU 110	0.0002	-0.00001	-0.57759	-0.0001	-0.0001	0
114	SLU 111	0.0002	0.00001	-0.57759	-0.0001	-0.0001	0
114	SLU 112	0.0002	0	-0.57759	-0.0001	-0.0001	0
114	SLU 113	0.00017	-0.00017	-0.8333	0	-0.0001	0
114	SLU 114	0.00017	-0.00016	-0.8333	0	-0.0001	0
114	SLU 115	0.00017	-0.00014	-0.8333	0	-0.0001	0
114	SLU 116	0.00017	-0.00014	-0.8333	0	-0.0001	0
114	SLU 117	0.00027	-0.00017	-0.87763	0	-0.0001	0
114	SLU 118	0.00027	-0.00016	-0.87763	0	-0.0001	0
114	SLU 119	0.00027	-0.00014	-0.87763	0	-0.0001	0
114	SLU 120	0.00027	-0.00014	-0.87763	0	-0.0001	0
114	SLU 121	0.00037	-0.00017	-0.92195	0	-0.0002	0
114	SLU 122	0.00037	-0.00017	-0.92195	0	-0.0002	0
114	SLU 123	0.00037	-0.00016	-0.92195	0	-0.0002	0
114	SLU 124	0.00037	-0.00016	-0.92195	0	-0.0002	0

Nodo	Cont.	Spostamento			Rotazione		
Ind.	N.br.	ux	uy	uz	rx	ry	rz
114	SLU 125	0.00042	-0.00041	-1.34985	0.0001	-0.0002	0
114	SLU 126	0.00042	-0.00041	-1.34985	0.0001	-0.0002	0
114	SLU 127	0.00042	-0.0004	-1.34985	0.0001	-0.0002	0
114	SLU 128	0.00042	-0.0004	-1.34985	0.0001	-0.0002	0
114	SLU 129	0.00052	-0.00041	-1.39417	0.0001	-0.0002	0
114	SLU 130	0.00052	-0.00041	-1.39417	0.0001	-0.0002	0
114	SLU 131	0.00052	-0.0004	-1.39417	0.0001	-0.0002	0
114	SLU 132	0.00052	-0.0004	-1.39417	0.0001	-0.0002	0
114	SLE RA 1	0	-0.00001	-0.37611	0	0	0
114	SLE RA 2	0	-0.00001	-0.37611	0	0	0
114	SLE RA 3	0	0	-0.37611	-0.0001	0	0
114	SLE RA 4	0	0.00002	-0.37611	-0.0001	0	0
114	SLE RA 5	0	0.00002	-0.37611	-0.0001	0	0
114	SLE RA 6	0.00007	-0.00001	-0.40566	0	0	0
114	SLE RA 7	0.00007	0	-0.40566	-0.0001	0	0
114	SLE RA 8	0.00007	0.00002	-0.40566	-0.0001	0	0
114	SLE RA 9	0.00007	0.00002	-0.40566	-0.0001	0	0
114	SLE RA 10	0.00013	-0.00001	-0.43521	-0.0001	-0.0001	0
114	SLE RA 11	0.00013	-0.00001	-0.43521	-0.0001	-0.0001	0
114	SLE RA 12	0.00013	0	-0.43521	-0.0001	-0.0001	0
114	SLE RA 13	0.00013	0	-0.43521	-0.0001	-0.0001	0
114	SLE RA 14	0.00011	-0.00011	-0.60568	0	0	0
114	SLE RA 15	0.00011	-0.00011	-0.60568	0	0	0
114	SLE RA 16	0.00011	-0.00009	-0.60568	0	0	0
114	SLE RA 17	0.00011	-0.00009	-0.60568	0	0	0
114	SLE RA 18	0.00018	-0.00011	-0.63523	0	-0.0001	0
114	SLE RA 19	0.00018	-0.00011	-0.63523	0	-0.0001	0
114	SLE RA 20	0.00018	-0.00009	-0.63523	0	-0.0001	0
114	SLE RA 21	0.00018	-0.00009	-0.63523	0	-0.0001	0
114	SLE RA 22	0.00025	-0.00011	-0.66478	0	-0.0001	0
114	SLE RA 23	0.00025	-0.00011	-0.66478	0	-0.0001	0
114	SLE RA 24	0.00025	-0.0001	-0.66478	0	-0.0001	0
114	SLE RA 25	0.00025	-0.00011	-0.66478	0	-0.0001	0
114	SLE RA 26	0.00028	-0.00028	-0.95004	0	-0.0001	0
114	SLE RA 27	0.00028	-0.00028	-0.95004	0	-0.0001	0
114	SLE RA 28	0.00028	-0.00027	-0.95004	0	-0.0001	0
114	SLE RA 29	0.00028	-0.00027	-0.95004	0	-0.0001	0
114	SLE RA 30	0.00035	-0.00028	-0.97959	0	-0.0001	0
114	SLE RA 31	0.00035	-0.00028	-0.97959	0	-0.0001	0
114	SLE RA 32	0.00035	-0.00027	-0.97959	0	-0.0001	0
114	SLE RA 33	0.00035	-0.00027	-0.97959	0	-0.0001	0
114	SLE FR 1	0	-0.00001	-0.37611	0	0	0
114	SLE FR 2	0	-0.00001	-0.37611	0	0	0
114	SLE FR 3	0	0	-0.37611	-0.0001	0	0
114	SLE FR 4	0.00003	-0.00001	-0.38793	0	0	0
114	SLE FR 5	0.00011	-0.00011	-0.60568	0	0	0
114	SLE QP 1	0	-0.00001	-0.37611	0	0	0
114	SLO 1	-0.13006	-0.435	-0.37611	0.314	0.0449	0
114	SLO 2	-0.13006	-0.435	-0.37611	0.314	0.0449	0
114	SLO 3	-0.13006	0.43499	-0.37611	-0.3141	0.0449	0
114	SLO 4	-0.13006	0.43499	-0.37611	-0.3141	0.0449	0
114	SLO 5	-0.03902	-1.44998	-0.37611	1.0468	0.0135	0
114	SLO 6	-0.03902	-1.44998	-0.37611	1.0468	0.0135	0
114	SLO 7	-0.03902	1.44997	-0.37611	-1.0469	0.0135	0
114	SLO 8	-0.03902	1.44997	-0.37611	-1.0469	0.0135	0
114	SLO 9	0.03902	-1.44998	-0.37611	1.0468	-0.0135	0
114	SLO 10	0.03902	-1.44998	-0.37611	1.0468	-0.0135	0
114	SLO 11	0.03902	1.44997	-0.37611	-1.0469	-0.0135	0
114	SLO 12	0.03902	1.44997	-0.37611	-1.0469	-0.0135	0
114	SLO 13	0.13006	-0.435	-0.37611	0.314	-0.0449	0
114	SLO 14	0.13006	-0.435	-0.37611	0.314	-0.0449	0
114	SLO 15	0.13006	0.43499	-0.37611	-0.3141	-0.0449	0
114	SLO 16	0.13006	0.43499	-0.37611	-0.3141	-0.0449	0
114	SLD 1	-0.10672	-0.40193	-0.37611	0.2901	0.0369	0
114	SLD 2	-0.10672	-0.40193	-0.37611	0.2901	0.0369	0
114	SLD 3	-0.10672	0.40192	-0.37611	-0.2902	0.0369	0
114	SLD 4	-0.10672	0.40192	-0.37611	-0.2902	0.0369	0
114	SLD 5	-0.03201	-1.33976	-0.37611	0.9673	0.0111	0
114	SLD 6	-0.03201	-1.33976	-0.37611	0.9673	0.0111	0
114	SLD 7	-0.03201	1.33975	-0.37611	-0.9674	0.0111	0
114	SLD 8	-0.03201	1.33975	-0.37611	-0.9674	0.0111	0
114	SLD 9	0.03201	-1.33976	-0.37611	0.9673	-0.0111	0
114	SLD 10	0.03201	-1.33976	-0.37611	0.9673	-0.0111	0
114	SLD 11	0.03201	1.33975	-0.37611	-0.9674	-0.0111	0
114	SLD 12	0.03201	1.33975	-0.37611	-0.9674	-0.0111	0
114	SLD 13	0.10672	-0.40193	-0.37611	0.2901	-0.0369	0
114	SLD 14	0.10672	-0.40193	-0.37611	0.2901	-0.0369	0
114	SLD 15	0.10672	0.40192	-0.37611	-0.2902	-0.0369	0
114	SLD 16	0.10672	0.40192	-0.37611	-0.2902	-0.0369	0
114	SLV 1	-0.2384	-1.06009	-0.37611	0.7653	0.0824	0
114	SLV 2	-0.2384	-1.06009	-0.37611	0.7653	0.0824	0
114	SLV 3	-0.2384	1.06008	-0.37611	-0.7654	0.0824	0
114	SLV 4	-0.2384	1.06008	-0.37611	-0.7654	0.0824	0
114	SLV 5	-0.07152	-3.53363	-0.37611	2.5512	0.0247	0
114	SLV 6	-0.07152	-3.53363	-0.37611	2.5512	0.0247	0
114	SLV 7	-0.07152	3.53361	-0.37611	-2.5513	0.0247	0
114	SLV 8	-0.07152	3.53361	-0.37611	-2.5513	0.0247	0
114	SLV 9	0.07152	-3.53363	-0.37611	2.5512	-0.0247	0
114	SLV 10	0.07152	-3.53363	-0.37611	2.5512	-0.0247	0
114	SLV 11	0.07152	3.53361	-0.37611	-2.5513	-0.0247	0
114	SLV 12	0.07152	3.53361	-0.37611	-2.5513	-0.0247	0
114	SLV 13	0.2384	-1.06009	-0.37611	0.7653	-0.0824	0
114	SLV 14	0.2384	-1.06009	-0.37611	0.7653	-0.0824	0
114	SLV 15	0.2384	1.06008	-0.37611	-0.7654	-0.0824	0
114	SLV 16	0.2384	1.06008	-0.37611	-0.7654	-0.0824	0

Nodo	Cont.	Spostamento			Rotazione		
Ind.	N.br.	ux	uy	uz	rx	ry	rz
115	SLU 1	0	0	-0.37607	0	0	0
115	SLU 2	0	-0.00001	-0.37609	0	0	0
115	SLU 3	0	0.00001	-0.37609	0	0	0
115	SLU 4	0	0.00003	-0.37607	0	0	0
115	SLU 5	0	0.00003	-0.37609	0	0	0
115	SLU 6	0.00009	-0.00001	-0.40938	0	0	0
115	SLU 7	0.00009	0.00001	-0.40938	0	0	0
115	SLU 8	0.00009	0.00003	-0.40936	0	0	0
115	SLU 9	0.00009	0.00003	-0.40937	0	0	0
115	SLU 10	0.00019	0	-0.44265	0	-0.0001	0
115	SLU 11	0.00019	-0.00001	-0.44266	0	-0.0001	0
115	SLU 12	0.00019	0.00001	-0.44265	0	-0.0001	0
115	SLU 13	0.00019	0.00001	-0.44266	0	-0.0001	0
115	SLU 14	0.00016	-0.00017	-0.56683	0.0001	-0.0001	0
115	SLU 15	0.00016	-0.00015	-0.56683	0.0001	-0.0001	0
115	SLU 16	0.00016	-0.00013	-0.56681	0.0001	-0.0001	0
115	SLU 17	0.00016	-0.00013	-0.56682	0.0001	-0.0001	0
115	SLU 18	0.00025	-0.00017	-0.60012	0.0001	-0.0001	0
115	SLU 19	0.00025	-0.00015	-0.60012	0.0001	-0.0001	0
115	SLU 20	0.00025	-0.00013	-0.6001	0.0001	-0.0001	0
115	SLU 21	0.00025	-0.00013	-0.60011	0.0001	-0.0001	0
115	SLU 22	0.00035	-0.00017	-0.63339	0.0001	-0.0002	0
115	SLU 23	0.00035	-0.00017	-0.6334	0.0001	-0.0002	0
115	SLU 24	0.00035	-0.00015	-0.63339	0.0001	-0.0002	0
115	SLU 25	0.00035	-0.00015	-0.6334	0.0001	-0.0002	0
115	SLU 26	0.0004	-0.00041	-0.85292	0.0002	-0.0002	0
115	SLU 27	0.0004	-0.00041	-0.85293	0.0002	-0.0002	0
115	SLU 28	0.0004	-0.00039	-0.85292	0.0002	-0.0002	0
115	SLU 29	0.0004	-0.00039	-0.85293	0.0002	-0.0002	0
115	SLU 30	0.00049	-0.00041	-0.88621	0.0002	-0.0002	0
115	SLU 31	0.00049	-0.00041	-0.88622	0.0002	-0.0002	0
115	SLU 32	0.00049	-0.00039	-0.88621	0.0002	-0.0002	0
115	SLU 33	0.00049	-0.00039	-0.88622	0.0002	-0.0002	0
115	SLU 34	0	0	-0.37607	0	0	0
115	SLU 35	0	-0.00001	-0.37609	0	0	0
115	SLU 36	0	0.00001	-0.37609	0	0	0
115	SLU 37	0	0.00003	-0.37607	0	0	0
115	SLU 38	0	0.00003	-0.37609	0	0	0
115	SLU 39	0.00009	-0.00001	-0.40938	0	0	0
115	SLU 40	0.00009	0.00001	-0.40938	0	0	0
115	SLU 41	0.00009	0.00003	-0.40936	0	0	0
115	SLU 42	0.00009	0.00003	-0.40937	0	0	0
115	SLU 43	0.00019	0	-0.44265	0	-0.0001	0
115	SLU 44	0.00019	-0.00001	-0.44266	0	-0.0001	0
115	SLU 45	0.00019	0.00001	-0.44265	0	-0.0001	0
115	SLU 46	0.00019	0.00001	-0.44266	0	-0.0001	0
115	SLU 47	0.00016	-0.00017	-0.56683	0.0001	-0.0001	0
115	SLU 48	0.00016	-0.00015	-0.56683	0.0001	-0.0001	0
115	SLU 49	0.00016	-0.00013	-0.56681	0.0001	-0.0001	0
115	SLU 50	0.00016	-0.00013	-0.56682	0.0001	-0.0001	0
115	SLU 51	0.00025	-0.00017	-0.60012	0.0001	-0.0001	0
115	SLU 52	0.00025	-0.00015	-0.60012	0.0001	-0.0001	0
115	SLU 53	0.00025	-0.00013	-0.6001	0.0001	-0.0001	0
115	SLU 54	0.00025	-0.00013	-0.60011	0.0001	-0.0001	0
115	SLU 55	0.00035	-0.00017	-0.63339	0.0001	-0.0002	0
115	SLU 56	0.00035	-0.00017	-0.6334	0.0001	-0.0002	0
115	SLU 57	0.00035	-0.00015	-0.63339	0.0001	-0.0002	0
115	SLU 58	0.00035	-0.00015	-0.6334	0.0001	-0.0002	0
115	SLU 59	0.0004	-0.00041	-0.85292	0.0002	-0.0002	0
115	SLU 60	0.0004	-0.00041	-0.85293	0.0002	-0.0002	0
115	SLU 61	0.0004	-0.00039	-0.85292	0.0002	-0.0002	0
115	SLU 62	0.0004	-0.00039	-0.85293	0.0002	-0.0002	0
115	SLU 63	0.00049	-0.00041	-0.88621	0.0002	-0.0002	0
115	SLU 64	0.00049	-0.00041	-0.88622	0.0002	-0.0002	0
115	SLU 65	0.00049	-0.00039	-0.88621	0.0002	-0.0002	0
115	SLU 66	0.00049	-0.00039	-0.88622	0.0002	-0.0002	0
115	SLU 67	0	-0.00001	-0.48889	0	0	0
115	SLU 68	0	-0.00001	-0.48891	0	0	0
115	SLU 69	0	0.00001	-0.48891	0	0	0
115	SLU 70	0	0.00003	-0.48889	0	0	0
115	SLU 71	0	0.00003	-0.48891	0	0	0
115	SLU 72	0.00009	-0.00001	-0.5222	0	0	0
115	SLU 73	0.00009	0.00001	-0.5222	0	0	0
115	SLU 74	0.00009	0.00003	-0.52218	0	0	0
115	SLU 75	0.00009	0.00003	-0.5222	0	0	0
115	SLU 76	0.00019	-0.00001	-0.55547	0	-0.0001	0
115	SLU 77	0.00019	-0.00001	-0.55548	0	-0.0001	0
115	SLU 78	0.00019	0.00001	-0.55547	0	-0.0001	0
115	SLU 79	0.00019	0.00001	-0.55548	0	-0.0001	0
115	SLU 80	0.00016	-0.00017	-0.67965	0.0001	-0.0001	0
115	SLU 81	0.00016	-0.00015	-0.67965	0.0001	-0.0001	0
115	SLU 82	0.00016	-0.00013	-0.67963	0.0001	-0.0001	0
115	SLU 83	0.00016	-0.00013	-0.67965	0.0001	-0.0001	0
115	SLU 84	0.00025	-0.00017	-0.71294	0.0001	-0.0001	0
115	SLU 85	0.00025	-0.00015	-0.71294	0.0001	-0.0001	0
115	SLU 86	0.00025	-0.00013	-0.71292	0.0001	-0.0001	0
115	SLU 87	0.00025	-0.00013	-0.71293	0.0001	-0.0001	0
115	SLU 88	0.00035	-0.00017	-0.74621	0.0001	-0.0002	0
115	SLU 89	0.00035	-0.00017	-0.74622	0.0001	-0.0002	0
115	SLU 90	0.00035	-0.00015	-0.74621	0.0001	-0.0002	0
115	SLU 91	0.00035	-0.00015	-0.74622	0.0001	-0.0002	0
115	SLU 92	0.0004	-0.00041	-0.96574	0.0002	-0.0002	0
115	SLU 93	0.0004	-0.00041	-0.96575	0.0002	-0.0002	0
115	SLU 94	0.0004	-0.00039	-0.96574	0.0002	-0.0002	0
115	SLU 95	0.0004	-0.00039	-0.96575	0.0002	-0.0002	0

Nodo	Cont.	Spostamento			Rotazione		
Ind.	N.br.	ux	uy	uz	rx	ry	rz
115	SLU 96	0.00049	-0.00041	-0.99903	0.0002	-0.0002	0
115	SLU 97	0.00049	-0.00041	-0.99904	0.0002	-0.0002	0
115	SLU 98	0.00049	-0.00039	-0.99903	0.0002	-0.0002	0
115	SLU 99	0.00049	-0.00039	-0.99904	0.0002	-0.0002	0
115	SLU 100	0	-0.00001	-0.48889	0	0	0
115	SLU 101	0	-0.00001	-0.48891	0	0	0
115	SLU 102	0	0.00001	-0.48891	0	0	0
115	SLU 103	0	0.00003	-0.48889	0	0	0
115	SLU 104	0	0.00003	-0.48891	0	0	0
115	SLU 105	0.00009	-0.00001	-0.5222	0	0	0
115	SLU 106	0.00009	0.00001	-0.5222	0	0	0
115	SLU 107	0.00009	0.00003	-0.52218	0	0	0
115	SLU 108	0.00009	0.00003	-0.5222	0	0	0
115	SLU 109	0.00019	-0.00001	-0.55547	0	-0.0001	0
115	SLU 110	0.00019	-0.00001	-0.55548	0	-0.0001	0
115	SLU 111	0.00019	0.00001	-0.55547	0	-0.0001	0
115	SLU 112	0.00019	0.00001	-0.55548	0	-0.0001	0
115	SLU 113	0.00016	-0.00017	-0.67965	0.0001	-0.0001	0
115	SLU 114	0.00016	-0.00015	-0.67965	0.0001	-0.0001	0
115	SLU 115	0.00016	-0.00013	-0.67963	0.0001	-0.0001	0
115	SLU 116	0.00016	-0.00013	-0.67965	0.0001	-0.0001	0
115	SLU 117	0.00025	-0.00017	-0.71294	0.0001	-0.0001	0
115	SLU 118	0.00025	-0.00015	-0.71294	0.0001	-0.0001	0
115	SLU 119	0.00025	-0.00013	-0.71292	0.0001	-0.0001	0
115	SLU 120	0.00025	-0.00013	-0.71293	0.0001	-0.0001	0
115	SLU 121	0.00035	-0.00017	-0.74621	0.0001	-0.0002	0
115	SLU 122	0.00035	-0.00017	-0.74622	0.0001	-0.0002	0
115	SLU 123	0.00035	-0.00015	-0.74621	0.0001	-0.0002	0
115	SLU 124	0.00035	-0.00015	-0.74622	0.0001	-0.0002	0
115	SLU 125	0.0004	-0.00041	-0.96574	0.0002	-0.0002	0
115	SLU 126	0.0004	-0.00041	-0.96575	0.0002	-0.0002	0
115	SLU 127	0.0004	-0.00039	-0.96574	0.0002	-0.0002	0
115	SLU 128	0.0004	-0.00039	-0.96575	0.0002	-0.0002	0
115	SLU 129	0.00049	-0.00041	-0.99903	0.0002	-0.0002	0
115	SLU 130	0.00049	-0.00041	-0.99904	0.0002	-0.0002	0
115	SLU 131	0.00049	-0.00039	-0.99903	0.0002	-0.0002	0
115	SLU 132	0.00049	-0.00039	-0.99904	0.0002	-0.0002	0
115	SLE RA 1	0	0	-0.37607	0	0	0
115	SLE RA 2	0	0	-0.37608	0	0	0
115	SLE RA 3	0	0	-0.37608	0	0	0
115	SLE RA 4	0	0.00002	-0.37607	0	0	0
115	SLE RA 5	0	0.00002	-0.37608	0	0	0
115	SLE RA 6	0.00006	0	-0.39828	0	0	0
115	SLE RA 7	0.00006	0	-0.39828	0	0	0
115	SLE RA 8	0.00006	0.00002	-0.39826	0	0	0
115	SLE RA 9	0.00006	0.00002	-0.39827	0	0	0
115	SLE RA 10	0.00013	0	-0.42046	0	-0.0001	0
115	SLE RA 11	0.00013	0	-0.42047	0	-0.0001	0
115	SLE RA 12	0.00013	0	-0.42046	0	-0.0001	0
115	SLE RA 13	0.00013	0	-0.42047	0	-0.0001	0
115	SLE RA 14	0.00011	-0.00011	-0.50324	0.0001	0	0
115	SLE RA 15	0.00011	-0.0001	-0.50324	0.0001	0	0
115	SLE RA 16	0.00011	-0.00009	-0.50323	0.0001	0	0
115	SLE RA 17	0.00011	-0.00009	-0.50324	0.0001	0	0
115	SLE RA 18	0.00017	-0.00011	-0.52544	0.0001	-0.0001	0
115	SLE RA 19	0.00017	-0.0001	-0.52544	0.0001	-0.0001	0
115	SLE RA 20	0.00017	-0.00009	-0.52542	0.0001	-0.0001	0
115	SLE RA 21	0.00017	-0.00009	-0.52543	0.0001	-0.0001	0
115	SLE RA 22	0.00023	-0.00011	-0.54761	0.0001	-0.0001	0
115	SLE RA 23	0.00023	-0.00011	-0.54762	0.0001	-0.0001	0
115	SLE RA 24	0.00023	-0.0001	-0.54761	0.0001	-0.0001	0
115	SLE RA 25	0.00023	-0.0001	-0.54762	0.0001	-0.0001	0
115	SLE RA 26	0.00026	-0.00027	-0.69397	0.0001	-0.0001	0
115	SLE RA 27	0.00026	-0.00027	-0.69398	0.0001	-0.0001	0
115	SLE RA 28	0.00026	-0.00026	-0.69397	0.0001	-0.0001	0
115	SLE RA 29	0.00026	-0.00026	-0.69398	0.0001	-0.0001	0
115	SLE RA 30	0.00033	-0.00027	-0.71616	0.0001	-0.0001	0
115	SLE RA 31	0.00033	-0.00027	-0.71617	0.0001	-0.0001	0
115	SLE RA 32	0.00033	-0.00026	-0.71616	0.0001	-0.0001	0
115	SLE RA 33	0.00033	-0.00026	-0.71617	0.0001	-0.0001	0
115	SLE FR 1	0	0	-0.37607	0	0	0
115	SLE FR 2	0	0	-0.37608	0	0	0
115	SLE FR 3	0	0.00001	-0.37607	0	0	0
115	SLE FR 4	0.00003	0	-0.38495	0	0	0
115	SLE FR 5	0.00011	-0.00011	-0.50323	0.0001	0	0
115	SLE QP 1	0	0	-0.37607	0	0	0
115	SLO 1	-0.12993	-0.43483	-0.37607	0.3136	0.0449	0
115	SLO 2	-0.12993	-0.43483	-0.37607	0.3136	0.0449	0
115	SLO 3	-0.12993	0.43482	-0.37607	-0.3135	0.0449	0
115	SLO 4	-0.12993	0.43482	-0.37607	-0.3135	0.0449	0
115	SLO 5	-0.03898	-1.44942	-0.37607	1.0452	0.0135	0
115	SLO 6	-0.03898	-1.44942	-0.37607	1.0452	0.0135	0
115	SLO 7	-0.03898	1.44941	-0.37607	-1.0451	0.0135	0
115	SLO 8	-0.03898	1.44941	-0.37607	-1.0451	0.0135	0
115	SLO 9	0.03898	-1.44942	-0.37607	1.0452	-0.0135	0
115	SLO 10	0.03898	-1.44942	-0.37607	1.0452	-0.0135	0
115	SLO 11	0.03898	1.44941	-0.37607	-1.0451	-0.0135	0
115	SLO 12	0.03898	1.44941	-0.37607	-1.0451	-0.0135	0
115	SLO 13	0.12993	-0.43483	-0.37607	0.3136	-0.0449	0
115	SLO 14	0.12993	-0.43483	-0.37607	0.3136	-0.0449	0
115	SLO 15	0.12993	0.43482	-0.37607	-0.3135	-0.0449	0
115	SLO 16	0.12993	0.43482	-0.37607	-0.3135	-0.0449	0
115	SLD 1	-0.10661	-0.40178	-0.37607	0.2897	0.0368	0
115	SLD 2	-0.10661	-0.40178	-0.37607	0.2897	0.0368	0
115	SLD 3	-0.10661	0.40177	-0.37607	-0.2897	0.0368	0

Nodo	Cont.	Spostamento			Rotazione		
Ind.	N.br.	ux	uy	uz	rx	ry	rz
115	SLD 4	-0.10661	0.40177	-0.37607	-0.2897	0.0368	0
115	SLD 5	-0.03198	-1.33924	-0.37607	0.9657	0.011	0
115	SLD 6	-0.03198	-1.33924	-0.37607	0.9657	0.011	0
115	SLD 7	-0.03198	1.33924	-0.37607	-0.9657	0.011	0
115	SLD 8	-0.03198	1.33924	-0.37607	-0.9657	0.011	0
115	SLD 9	0.03198	-1.33924	-0.37607	0.9657	-0.011	0
115	SLD 10	0.03198	-1.33924	-0.37607	0.9657	-0.011	0
115	SLD 11	0.03198	1.33924	-0.37607	-0.9657	-0.011	0
115	SLD 12	0.03198	1.33924	-0.37607	-0.9657	-0.011	0
115	SLD 13	0.10661	-0.40178	-0.37607	0.2897	-0.0368	0
115	SLD 14	0.10661	-0.40178	-0.37607	0.2897	-0.0368	0
115	SLD 15	0.10661	0.40177	-0.37607	-0.2897	-0.0368	0
115	SLD 16	0.10661	0.40177	-0.37607	-0.2897	-0.0368	0
115	SLV 1	-0.23817	-1.05968	-0.37607	0.7641	0.0823	0
115	SLV 2	-0.23817	-1.05968	-0.37607	0.7641	0.0823	0
115	SLV 3	-0.23817	1.05967	-0.37607	-0.7641	0.0823	0
115	SLV 4	-0.23817	1.05967	-0.37607	-0.7641	0.0823	0
115	SLV 5	-0.07145	-3.53227	-0.37607	2.5471	0.0247	0
115	SLV 6	-0.07145	-3.53227	-0.37607	2.5471	0.0247	0
115	SLV 7	-0.07145	3.53226	-0.37607	-2.547	0.0247	0
115	SLV 8	-0.07145	3.53226	-0.37607	-2.547	0.0247	0
115	SLV 9	0.07145	-3.53227	-0.37607	2.5471	-0.0247	0
115	SLV 10	0.07145	-3.53227	-0.37607	2.5471	-0.0247	0
115	SLV 11	0.07145	3.53226	-0.37607	-2.547	-0.0247	0
115	SLV 12	0.07145	3.53226	-0.37607	-2.547	-0.0247	0
115	SLV 13	0.23817	-1.05968	-0.37607	0.7641	-0.0823	0
115	SLV 14	0.23817	-1.05968	-0.37607	0.7641	-0.0823	0
115	SLV 15	0.23817	1.05967	-0.37607	-0.7641	-0.0823	0
115	SLV 16	0.23817	1.05967	-0.37607	-0.7641	-0.0823	0
116	SLU 1	0	0	-0.04742	0	0	0
116	SLU 2	0	0	-0.21519	0	0	0
116	SLU 3	0	0.00001	-0.21519	0	0	0
116	SLU 4	0	0.00003	-0.04742	-0.0001	0	0
116	SLU 5	0	0.00003	-0.17325	0	0	0
116	SLU 6	0	0	-0.21789	0	0	0
116	SLU 7	0	0.00001	-0.21789	0	0	0
116	SLU 8	0	0.00003	-0.05012	-0.0001	0	0
116	SLU 9	0	0.00003	-0.17595	0	0	0
116	SLU 10	0	0	-0.05282	0	0	0
116	SLU 11	0	0	-0.17865	0	0	0
116	SLU 12	0	0.00001	-0.05282	0	0	0
116	SLU 13	0	0.00001	-0.17865	0	0	0
116	SLU 14	0	-0.00016	-0.21768	0	0	0
116	SLU 15	0	-0.00015	-0.21768	0	0	0
116	SLU 16	0	-0.00013	-0.04991	0	0	0
116	SLU 17	0	-0.00013	-0.17574	0	0	0
116	SLU 18	0	-0.00016	-0.22039	0	0	0
116	SLU 19	0	-0.00015	-0.22039	0	0	0
116	SLU 20	0	-0.00013	-0.05261	0	0	0
116	SLU 21	0	-0.00013	-0.17844	0	0	0
116	SLU 22	0	-0.00016	-0.05532	0	0	0
116	SLU 23	0	-0.00016	-0.18114	0	0	0
116	SLU 24	0	-0.00015	-0.05532	0	0	0
116	SLU 25	0	-0.00015	-0.18114	0	0	0
116	SLU 26	0	-0.0004	-0.05366	0.0001	0	0
116	SLU 27	0	-0.0004	-0.17948	0.0001	0	0
116	SLU 28	0	-0.00039	-0.05366	0.0001	0	0
116	SLU 29	0	-0.00039	-0.17948	0.0001	0	0
116	SLU 30	0	-0.0004	-0.05636	0.0001	0	0
116	SLU 31	0	-0.0004	-0.18219	0.0001	0	0
116	SLU 32	0	-0.00039	-0.05636	0.0001	0	0
116	SLU 33	0	-0.00039	-0.18219	0.0001	0	0
116	SLU 34	0	0	-0.04742	0	0	0
116	SLU 35	0	0	-0.21519	0	0	0
116	SLU 36	0	0.00001	-0.21519	0	0	0
116	SLU 37	0	0.00003	-0.04742	-0.0001	0	0
116	SLU 38	0	0.00003	-0.17325	0	0	0
116	SLU 39	0	0	-0.21789	0	0	0
116	SLU 40	0	0.00001	-0.21789	0	0	0
116	SLU 41	0	0.00003	-0.05012	-0.0001	0	0
116	SLU 42	0	0.00003	-0.17595	0	0	0
116	SLU 43	0	0	-0.05282	0	0	0
116	SLU 44	0	0	-0.17865	0	0	0
116	SLU 45	0	0.00001	-0.05282	0	0	0
116	SLU 46	0	0.00001	-0.17865	0	0	0
116	SLU 47	0	-0.00016	-0.21768	0	0	0
116	SLU 48	0	-0.00015	-0.21768	0	0	0
116	SLU 49	0	-0.00013	-0.04991	0	0	0
116	SLU 50	0	-0.00013	-0.17574	0	0	0
116	SLU 51	0	-0.00016	-0.22039	0	0	0
116	SLU 52	0	-0.00015	-0.22039	0	0	0
116	SLU 53	0	-0.00013	-0.05261	0	0	0
116	SLU 54	0	-0.00013	-0.17844	0	0	0
116	SLU 55	0	-0.00016	-0.05532	0	0	0
116	SLU 56	0	-0.00016	-0.18114	0	0	0
116	SLU 57	0	-0.00015	-0.05532	0	0	0
116	SLU 58	0	-0.00015	-0.18114	0	0	0
116	SLU 59	0	-0.0004	-0.05366	0.0001	0	0
116	SLU 60	0	-0.0004	-0.17948	0.0001	0	0
116	SLU 61	0	-0.00039	-0.05366	0.0001	0	0
116	SLU 62	0	-0.00039	-0.17948	0.0001	0	0
116	SLU 63	0	-0.0004	-0.05636	0.0001	0	0
116	SLU 64	0	-0.0004	-0.18219	0.0001	0	0
116	SLU 65	0	-0.00039	-0.05636	0.0001	0	0
116	SLU 66	0	-0.00039	-0.18219	0.0001	0	0

Nodo	Cont.	Spostamento			Rotazione		
Ind.	N.br.	ux	uy	uz	rx	ry	rz
116	SLU 67	0	0	-0.06164	0	0	0
116	SLU 68	0	0	-0.22941	0	0	0
116	SLU 69	0	0.00001	-0.22941	0	0	0
116	SLU 70	0	0.00003	-0.06164	-0.0001	0	0
116	SLU 71	0	0.00003	-0.18747	-0.0001	0	0
116	SLU 72	0	0	-0.23211	0	0	0
116	SLU 73	0	0.00001	-0.23211	0	0	0
116	SLU 74	0	0.00003	-0.06434	-0.0001	0	0
116	SLU 75	0	0.00003	-0.19017	-0.0001	0	0
116	SLU 76	0	0	-0.06704	0	0	0
116	SLU 77	0	0	-0.19287	0	0	0
116	SLU 78	0	0.00001	-0.06704	-0.0001	0	0
116	SLU 79	0	0.00001	-0.19287	-0.0001	0	0
116	SLU 80	0	-0.00016	-0.23191	0	0	0
116	SLU 81	0	-0.00015	-0.23191	0	0	0
116	SLU 82	0	-0.00013	-0.06414	0	0	0
116	SLU 83	0	-0.00013	-0.18997	0	0	0
116	SLU 84	0	-0.00016	-0.23461	0	0	0
116	SLU 85	0	-0.00015	-0.23461	0	0	0
116	SLU 86	0	-0.00013	-0.06684	0	0	0
116	SLU 87	0	-0.00013	-0.19267	0	0	0
116	SLU 88	0	-0.00016	-0.06954	0	0	0
116	SLU 89	0	-0.00016	-0.19537	0	0	0
116	SLU 90	0	-0.00015	-0.06954	0	0	0
116	SLU 91	0	-0.00015	-0.19537	0	0	0
116	SLU 92	0	-0.0004	-0.06788	0.0001	0	0
116	SLU 93	0	-0.0004	-0.19371	0.0001	0	0
116	SLU 94	0	-0.00039	-0.06788	0.0001	0	0
116	SLU 95	0	-0.00039	-0.19371	0.0001	0	0
116	SLU 96	0	-0.0004	-0.07058	0.0001	0	0
116	SLU 97	0	-0.0004	-0.19641	0.0001	0	0
116	SLU 98	0	-0.00039	-0.07058	0.0001	0	0
116	SLU 99	0	-0.00039	-0.19641	0.0001	0	0
116	SLU 100	0	0	-0.06164	0	0	0
116	SLU 101	0	0	-0.22941	0	0	0
116	SLU 102	0	0.00001	-0.22941	0	0	0
116	SLU 103	0	0.00003	-0.06164	-0.0001	0	0
116	SLU 104	0	0.00003	-0.18747	-0.0001	0	0
116	SLU 105	0	0	-0.23211	0	0	0
116	SLU 106	0	0.00001	-0.23211	0	0	0
116	SLU 107	0	0.00003	-0.06434	-0.0001	0	0
116	SLU 108	0	0.00003	-0.19017	-0.0001	0	0
116	SLU 109	0	0	-0.06704	0	0	0
116	SLU 110	0	0	-0.19287	0	0	0
116	SLU 111	0	0.00001	-0.06704	-0.0001	0	0
116	SLU 112	0	0.00001	-0.19287	-0.0001	0	0
116	SLU 113	0	-0.00016	-0.23191	0	0	0
116	SLU 114	0	-0.00015	-0.23191	0	0	0
116	SLU 115	0	-0.00013	-0.06414	0	0	0
116	SLU 116	0	-0.00013	-0.18997	0	0	0
116	SLU 117	0	-0.00016	-0.23461	0	0	0
116	SLU 118	0	-0.00015	-0.23461	0	0	0
116	SLU 119	0	-0.00013	-0.06684	0	0	0
116	SLU 120	0	-0.00013	-0.19267	0	0	0
116	SLU 121	0	-0.00016	-0.06954	0	0	0
116	SLU 122	0	-0.00016	-0.19537	0	0	0
116	SLU 123	0	-0.00015	-0.06954	0	0	0
116	SLU 124	0	-0.00015	-0.19537	0	0	0
116	SLU 125	0	-0.0004	-0.06788	0.0001	0	0
116	SLU 126	0	-0.0004	-0.19371	0.0001	0	0
116	SLU 127	0	-0.00039	-0.06788	0.0001	0	0
116	SLU 128	0	-0.00039	-0.19371	0.0001	0	0
116	SLU 129	0	-0.0004	-0.07058	0.0001	0	0
116	SLU 130	0	-0.0004	-0.19641	0.0001	0	0
116	SLU 131	0	-0.00039	-0.07058	0.0001	0	0
116	SLU 132	0	-0.00039	-0.19641	0.0001	0	0
116	SLE RA 1	0	0	-0.04742	0	0	0
116	SLE RA 2	0	0	-0.15926	0	0	0
116	SLE RA 3	0	0.00001	-0.15926	0	0	0
116	SLE RA 4	0	0.00002	-0.04742	0	0	0
116	SLE RA 5	0	0.00002	-0.1313	0	0	0
116	SLE RA 6	0	0	-0.16107	0	0	0
116	SLE RA 7	0	0.00001	-0.16107	0	0	0
116	SLE RA 8	0	0.00002	-0.04922	0	0	0
116	SLE RA 9	0	0.00002	-0.1331	0	0	0
116	SLE RA 10	0	0	-0.05102	0	0	0
116	SLE RA 11	0	0	-0.1349	0	0	0
116	SLE RA 12	0	0.00001	-0.05102	0	0	0
116	SLE RA 13	0	0.00001	-0.1349	0	0	0
116	SLE RA 14	0	-0.00011	-0.16093	0	0	0
116	SLE RA 15	0	-0.0001	-0.16093	0	0	0
116	SLE RA 16	0	-0.00009	-0.04908	0	0	0
116	SLE RA 17	0	-0.00009	-0.13297	0	0	0
116	SLE RA 18	0	-0.00011	-0.16273	0	0	0
116	SLE RA 19	0	-0.0001	-0.16273	0	0	0
116	SLE RA 20	0	-0.00009	-0.05088	0	0	0
116	SLE RA 21	0	-0.00009	-0.13477	0	0	0
116	SLE RA 22	0	-0.00011	-0.05268	0	0	0
116	SLE RA 23	0	-0.00011	-0.13657	0	0	0
116	SLE RA 24	0	-0.0001	-0.05268	0	0	0
116	SLE RA 25	0	-0.0001	-0.13657	0	0	0
116	SLE RA 26	0	-0.00027	-0.05158	0.0001	0	0
116	SLE RA 27	0	-0.00027	-0.13546	0.0001	0	0
116	SLE RA 28	0	-0.00026	-0.05158	0.0001	0	0
116	SLE RA 29	0	-0.00026	-0.13546	0.0001	0	0

Nodo	Cont.	Spostamento			Rotazione		
Ind.	N.br.	ux	uy	uz	rx	ry	rz
116	SLE RA 30	0	-0.00027	-0.05338	0.0001	0	0
116	SLE RA 31	0	-0.00027	-0.13726	0.0001	0	0
116	SLE RA 32	0	-0.00026	-0.05338	0.0001	0	0
116	SLE RA 33	0	-0.00026	-0.13726	0.0001	0	0
116	SLE FR 1	0	0	-0.04742	0	0	0
116	SLE FR 2	0	0	-0.1313	0	0	0
116	SLE FR 3	0	0.00001	-0.04742	0	0	0
116	SLE FR 4	0	0	-0.04814	0	0	0
116	SLE FR 5	0	-0.00011	-0.04908	0	0	0
116	SLE QP 1	0	0	-0.04742	0	0	0
116	SLO 1	-0.00866	-0.43458	-0.04742	0.2653	0.0018	0
116	SLO 2	-0.00866	-0.43458	-0.04742	0.2653	0.0018	0
116	SLO 3	-0.00866	0.43457	-0.04742	-0.2654	0.0018	0
116	SLO 4	-0.00866	0.43457	-0.04742	-0.2654	0.0018	0
116	SLO 5	-0.0026	-1.44858	-0.04742	0.8844	0.0005	0
116	SLO 6	-0.0026	-1.44858	-0.04742	0.8844	0.0005	0
116	SLO 7	-0.0026	1.44858	-0.04742	-0.8844	0.0005	0
116	SLO 8	-0.0026	1.44858	-0.04742	-0.8844	0.0005	0
116	SLO 9	0.0026	-1.44858	-0.04742	0.8844	-0.0005	0
116	SLO 10	0.0026	-1.44858	-0.04742	0.8844	-0.0005	0
116	SLO 11	0.0026	1.44858	-0.04742	-0.8844	-0.0005	0
116	SLO 12	0.0026	1.44858	-0.04742	-0.8844	-0.0005	0
116	SLO 13	0.00866	-0.43458	-0.04742	0.2653	-0.0018	0
116	SLO 14	0.00866	-0.43458	-0.04742	0.2653	-0.0018	0
116	SLO 15	0.00866	0.43457	-0.04742	-0.2654	-0.0018	0
116	SLO 16	0.00866	0.43457	-0.04742	-0.2654	-0.0018	0
116	SLD 1	-0.00712	-0.40154	-0.04742	0.2451	0.0015	0
116	SLD 2	-0.00712	-0.40154	-0.04742	0.2451	0.0015	0
116	SLD 3	-0.00712	0.40154	-0.04742	-0.2452	0.0015	0
116	SLD 4	-0.00712	0.40154	-0.04742	-0.2452	0.0015	0
116	SLD 5	-0.00214	-1.33847	-0.04742	0.8171	0.0004	0
116	SLD 6	-0.00214	-1.33847	-0.04742	0.8171	0.0004	0
116	SLD 7	-0.00214	1.33846	-0.04742	-0.8172	0.0004	0
116	SLD 8	-0.00214	1.33846	-0.04742	-0.8172	0.0004	0
116	SLD 9	0.00214	-1.33847	-0.04742	0.8171	-0.0004	0
116	SLD 10	0.00214	-1.33847	-0.04742	0.8171	-0.0004	0
116	SLD 11	0.00214	1.33846	-0.04742	-0.8172	-0.0004	0
116	SLD 12	0.00214	1.33846	-0.04742	-0.8172	-0.0004	0
116	SLD 13	0.00712	-0.40154	-0.04742	0.2451	-0.0015	0
116	SLD 14	0.00712	-0.40154	-0.04742	0.2451	-0.0015	0
116	SLD 15	0.00712	0.40154	-0.04742	-0.2452	-0.0015	0
116	SLD 16	0.00712	0.40154	-0.04742	-0.2452	-0.0015	0
116	SLV 1	-0.01534	-1.05907	-0.04742	0.6466	0.0032	0
116	SLV 2	-0.01534	-1.05907	-0.04742	0.6466	0.0032	0
116	SLV 3	-0.01534	1.05906	-0.04742	-0.6466	0.0032	0
116	SLV 4	-0.01534	1.05906	-0.04742	-0.6466	0.0032	0
116	SLV 5	-0.0046	-3.53022	-0.04742	2.1553	0.001	0
116	SLV 6	-0.0046	-3.53022	-0.04742	2.1553	0.001	0
116	SLV 7	-0.0046	3.53022	-0.04742	-2.1553	0.001	0
116	SLV 8	-0.0046	3.53022	-0.04742	-2.1553	0.001	0
116	SLV 9	0.0046	-3.53022	-0.04742	2.1553	-0.001	0
116	SLV 10	0.0046	-3.53022	-0.04742	2.1553	-0.001	0
116	SLV 11	0.0046	3.53022	-0.04742	-2.1553	-0.001	0
116	SLV 12	0.0046	3.53022	-0.04742	-2.1553	-0.001	0
116	SLV 13	0.01534	-1.05907	-0.04742	0.6466	-0.0032	0
116	SLV 14	0.01534	-1.05907	-0.04742	0.6466	-0.0032	0
116	SLV 15	0.01534	1.05906	-0.04742	-0.6466	-0.0032	0
116	SLV 16	0.01534	1.05906	-0.04742	-0.6466	-0.0032	0
117	SLU 1	0	0	-0.04768	0	0	0
117	SLU 2	0	0	-0.38321	0	0	0
117	SLU 3	0	0.00001	-0.38321	0	0	0
117	SLU 4	0	0.00003	-0.04768	0	0	0
117	SLU 5	0	0.00003	-0.29933	0	0	0
117	SLU 6	-0.00013	0	-0.38651	0	0.0002	0
117	SLU 7	-0.00013	0.00001	-0.38651	0	0.0002	0
117	SLU 8	-0.00013	0.00003	-0.05098	0	0.0002	0
117	SLU 9	-0.00013	0.00003	-0.30263	0	0.0002	0
117	SLU 10	-0.00025	0	-0.05427	0	0.0004	0
117	SLU 11	-0.00025	0	-0.30592	0	0.0004	0
117	SLU 12	-0.00025	0.00001	-0.05427	0	0.0004	0
117	SLU 13	-0.00025	0.00001	-0.30592	0	0.0004	0
117	SLU 14	-0.00021	-0.00016	-0.38469	0.0001	0.0003	0
117	SLU 15	-0.00021	-0.00015	-0.38469	0.0001	0.0003	0
117	SLU 16	-0.00021	-0.00013	-0.04916	0	0.0003	0
117	SLU 17	-0.00021	-0.00013	-0.30081	0.0001	0.0003	0
117	SLU 18	-0.00034	-0.00016	-0.38799	0.0001	0.0005	0
117	SLU 19	-0.00034	-0.00015	-0.38799	0.0001	0.0005	0
117	SLU 20	-0.00034	-0.00013	-0.05246	0	0.0005	0
117	SLU 21	-0.00034	-0.00013	-0.30411	0	0.0005	0
117	SLU 22	-0.00047	-0.00016	-0.05576	0.0001	0.0007	0
117	SLU 23	-0.00047	-0.00016	-0.30741	0.0001	0.0007	0
117	SLU 24	-0.00047	-0.00015	-0.05576	0.0001	0.0007	0
117	SLU 25	-0.00047	-0.00015	-0.30741	0.0001	0.0007	0
117	SLU 26	-0.00053	-0.0004	-0.05138	0.0002	0.0008	0
117	SLU 27	-0.00053	-0.0004	-0.30303	0.0002	0.0008	0
117	SLU 28	-0.00053	-0.00039	-0.05138	0.0002	0.0008	0
117	SLU 29	-0.00053	-0.00039	-0.30303	0.0002	0.0008	0
117	SLU 30	-0.00066	-0.0004	-0.05468	0.0002	0.001	0
117	SLU 31	-0.00066	-0.0004	-0.30633	0.0002	0.001	0
117	SLU 32	-0.00066	-0.00039	-0.05468	0.0002	0.001	0
117	SLU 33	-0.00066	-0.00039	-0.30633	0.0002	0.001	0
117	SLU 34	0	0	-0.04768	0	0	0
117	SLU 35	0	0	-0.38321	0	0	0
117	SLU 36	0	0.00001	-0.38321	0	0	0
117	SLU 37	0	0.00003	-0.04768	0	0	0

Nodo	Cont.	Spostamento			Rotazione		
Ind.	N.br.	ux	uy	uz	rx	ry	rz
117	SLU 38	0	0.00003	-0.29933	0	0	0
117	SLU 39	-0.00013	0	-0.38651	0	0.0002	0
117	SLU 40	-0.00013	0.00001	-0.38651	0	0.0002	0
117	SLU 41	-0.00013	0.00003	-0.05098	0	0.0002	0
117	SLU 42	-0.00013	0.00003	-0.30263	0	0.0002	0
117	SLU 43	-0.00025	0	-0.05427	0	0.0004	0
117	SLU 44	-0.00025	0	-0.30592	0	0.0004	0
117	SLU 45	-0.00025	0.00001	-0.05427	0	0.0004	0
117	SLU 46	-0.00025	0.00001	-0.30592	0	0.0004	0
117	SLU 47	-0.00021	-0.00016	-0.38469	0.0001	0.0003	0
117	SLU 48	-0.00021	-0.00015	-0.38469	0.0001	0.0003	0
117	SLU 49	-0.00021	-0.00013	-0.04916	0	0.0003	0
117	SLU 50	-0.00021	-0.00013	-0.30081	0.0001	0.0003	0
117	SLU 51	-0.00034	-0.00016	-0.38799	0.0001	0.0005	0
117	SLU 52	-0.00034	-0.00015	-0.38799	0.0001	0.0005	0
117	SLU 53	-0.00034	-0.00013	-0.05246	0	0.0005	0
117	SLU 54	-0.00034	-0.00013	-0.30411	0	0.0005	0
117	SLU 55	-0.00047	-0.00016	-0.05576	0.0001	0.0007	0
117	SLU 56	-0.00047	-0.00016	-0.30741	0.0001	0.0007	0
117	SLU 57	-0.00047	-0.00015	-0.05576	0.0001	0.0007	0
117	SLU 58	-0.00047	-0.00015	-0.30741	0.0001	0.0007	0
117	SLU 59	-0.00053	-0.0004	-0.05138	0.0002	0.0008	0
117	SLU 60	-0.00053	-0.0004	-0.30303	0.0002	0.0008	0
117	SLU 61	-0.00053	-0.00039	-0.05138	0.0002	0.0008	0
117	SLU 62	-0.00053	-0.00039	-0.30303	0.0002	0.0008	0
117	SLU 63	-0.00066	-0.0004	-0.05468	0.0002	0.001	0
117	SLU 64	-0.00066	-0.0004	-0.30633	0.0002	0.001	0
117	SLU 65	-0.00066	-0.00039	-0.05468	0.0002	0.001	0
117	SLU 66	-0.00066	-0.00039	-0.30633	0.0002	0.001	0
117	SLU 67	0	0	-0.06198	0	0	0
117	SLU 68	0	0	-0.39751	0	0	0
117	SLU 69	0	0.00001	-0.39751	0	0	0
117	SLU 70	0	0.00003	-0.06198	0	0	0
117	SLU 71	0	0.00003	-0.31363	0	0	0
117	SLU 72	-0.00013	0	-0.40081	0	0.0002	0
117	SLU 73	-0.00013	0.00001	-0.40081	0	0.0002	0
117	SLU 74	-0.00013	0.00003	-0.06528	0	0.0002	0
117	SLU 75	-0.00013	0.00003	-0.31693	0	0.0002	0
117	SLU 76	-0.00025	0	-0.06858	0	0.0004	0
117	SLU 77	-0.00025	0	-0.32023	0	0.0004	0
117	SLU 78	-0.00025	0.00001	-0.06858	0	0.0004	0
117	SLU 79	-0.00025	0.00001	-0.32023	0	0.0004	0
117	SLU 80	-0.00021	-0.00016	-0.399	0.0001	0.0003	0
117	SLU 81	-0.00021	-0.00015	-0.399	0.0001	0.0003	0
117	SLU 82	-0.00021	-0.00013	-0.06346	0	0.0003	0
117	SLU 83	-0.00021	-0.00013	-0.31511	0	0.0003	0
117	SLU 84	-0.00034	-0.00016	-0.40229	0.0001	0.0005	0
117	SLU 85	-0.00034	-0.00015	-0.40229	0.0001	0.0005	0
117	SLU 86	-0.00034	-0.00013	-0.06676	0	0.0005	0
117	SLU 87	-0.00034	-0.00013	-0.31841	0	0.0005	0
117	SLU 88	-0.00047	-0.00016	-0.07006	0.0001	0.0007	0
117	SLU 89	-0.00047	-0.00016	-0.32171	0.0001	0.0007	0
117	SLU 90	-0.00047	-0.00015	-0.07006	0	0.0007	0
117	SLU 91	-0.00047	-0.00015	-0.32171	0.0001	0.0007	0
117	SLU 92	-0.00053	-0.0004	-0.06569	0.0002	0.0008	0
117	SLU 93	-0.00053	-0.0004	-0.31734	0.0002	0.0008	0
117	SLU 94	-0.00053	-0.00039	-0.06569	0.0002	0.0008	0
117	SLU 95	-0.00053	-0.00039	-0.31734	0.0002	0.0008	0
117	SLU 96	-0.00066	-0.0004	-0.06898	0.0002	0.001	0
117	SLU 97	-0.00066	-0.0004	-0.32063	0.0002	0.001	0
117	SLU 98	-0.00066	-0.00039	-0.06898	0.0002	0.001	0
117	SLU 99	-0.00066	-0.00039	-0.32063	0.0002	0.001	0
117	SLU 100	0	0	-0.06198	0	0	0
117	SLU 101	0	0	-0.39751	0	0	0
117	SLU 102	0	0.00001	-0.39751	0	0	0
117	SLU 103	0	0.00003	-0.06198	0	0	0
117	SLU 104	0	0.00003	-0.31363	0	0	0
117	SLU 105	-0.00013	0	-0.40081	0	0.0002	0
117	SLU 106	-0.00013	0.00001	-0.40081	0	0.0002	0
117	SLU 107	-0.00013	0.00003	-0.06528	0	0.0002	0
117	SLU 108	-0.00013	0.00003	-0.31693	0	0.0002	0
117	SLU 109	-0.00025	0	-0.06858	0	0.0004	0
117	SLU 110	-0.00025	0	-0.32023	0	0.0004	0
117	SLU 111	-0.00025	0.00001	-0.06858	0	0.0004	0
117	SLU 112	-0.00025	0.00001	-0.32023	0	0.0004	0
117	SLU 113	-0.00021	-0.00016	-0.399	0.0001	0.0003	0
117	SLU 114	-0.00021	-0.00015	-0.399	0.0001	0.0003	0
117	SLU 115	-0.00021	-0.00013	-0.06346	0	0.0003	0
117	SLU 116	-0.00021	-0.00013	-0.31511	0	0.0003	0
117	SLU 117	-0.00034	-0.00016	-0.40229	0.0001	0.0005	0
117	SLU 118	-0.00034	-0.00015	-0.40229	0.0001	0.0005	0
117	SLU 119	-0.00034	-0.00013	-0.06676	0	0.0005	0
117	SLU 120	-0.00034	-0.00013	-0.31841	0	0.0005	0
117	SLU 121	-0.00047	-0.00016	-0.07006	0.0001	0.0007	0
117	SLU 122	-0.00047	-0.00016	-0.32171	0.0001	0.0007	0
117	SLU 123	-0.00047	-0.00015	-0.07006	0	0.0007	0
117	SLU 124	-0.00047	-0.00015	-0.32171	0.0001	0.0007	0
117	SLU 125	-0.00053	-0.0004	-0.06569	0.0002	0.0008	0
117	SLU 126	-0.00053	-0.0004	-0.31734	0.0002	0.0008	0
117	SLU 127	-0.00053	-0.00039	-0.06569	0.0002	0.0008	0
117	SLU 128	-0.00053	-0.00039	-0.31734	0.0002	0.0008	0
117	SLU 129	-0.00066	-0.0004	-0.06898	0.0002	0.001	0
117	SLU 130	-0.00066	-0.0004	-0.32063	0.0002	0.001	0
117	SLU 131	-0.00066	-0.00039	-0.06898	0.0002	0.001	0
117	SLU 132	-0.00066	-0.00039	-0.32063	0.0002	0.001	0

Nodo	Cont.	Spostamento			Rotazione		
Ind.	N.br.	ux	uy	uz	rx	ry	rz
117	SLE RA 1	0	0	-0.04768	0	0	0
117	SLE RA 2	0	0	-0.27137	0	0	0
117	SLE RA 3	0	0.00001	-0.27137	0	0	0
117	SLE RA 4	0	0.00002	-0.04768	0	0	0
117	SLE RA 5	0	0.00002	-0.21544	0	0	0
117	SLE RA 6	-0.00008	0	-0.27356	0	0.0001	0
117	SLE RA 7	-0.00008	0.00001	-0.27356	0	0.0001	0
117	SLE RA 8	-0.00008	0.00002	-0.04988	0	0.0001	0
117	SLE RA 9	-0.00008	0.00002	-0.21764	0	0.0001	0
117	SLE RA 10	-0.00017	0	-0.05207	0	0.0003	0
117	SLE RA 11	-0.00017	0	-0.21984	0	0.0003	0
117	SLE RA 12	-0.00017	0.00001	-0.05207	0	0.0003	0
117	SLE RA 13	-0.00017	0.00001	-0.21984	0	0.0003	0
117	SLE RA 14	-0.00014	-0.00011	-0.27235	0	0.0002	0
117	SLE RA 15	-0.00014	-0.0001	-0.27235	0	0.0002	0
117	SLE RA 16	-0.00014	-0.00009	-0.04866	0	0.0002	0
117	SLE RA 17	-0.00014	-0.00009	-0.21643	0	0.0002	0
117	SLE RA 18	-0.00023	-0.00011	-0.27455	0	0.0003	0
117	SLE RA 19	-0.00023	-0.0001	-0.27455	0	0.0003	0
117	SLE RA 20	-0.00023	-0.00009	-0.05086	0	0.0003	0
117	SLE RA 21	-0.00023	-0.00009	-0.21863	0	0.0003	0
117	SLE RA 22	-0.00031	-0.00011	-0.05306	0	0.0005	0
117	SLE RA 23	-0.00031	-0.00011	-0.22083	0	0.0005	0
117	SLE RA 24	-0.00031	-0.0001	-0.05306	0	0.0005	0
117	SLE RA 25	-0.00031	-0.0001	-0.22083	0	0.0005	0
117	SLE RA 26	-0.00035	-0.00027	-0.05015	0.0001	0.0005	0
117	SLE RA 27	-0.00035	-0.00027	-0.21791	0.0001	0.0005	0
117	SLE RA 28	-0.00035	-0.00026	-0.05015	0.0001	0.0005	0
117	SLE RA 29	-0.00035	-0.00026	-0.21791	0.0001	0.0005	0
117	SLE RA 30	-0.00044	-0.00027	-0.05235	0.0001	0.0007	0
117	SLE RA 31	-0.00044	-0.00027	-0.22011	0.0001	0.0007	0
117	SLE RA 32	-0.00044	-0.00026	-0.05235	0.0001	0.0007	0
117	SLE RA 33	-0.00044	-0.00026	-0.22011	0.0001	0.0007	0
117	SLE FR 1	0	0	-0.04768	0	0	0
117	SLE FR 2	0	0	-0.21544	0	0	0
117	SLE FR 3	0	0.00001	-0.04768	0	0	0
117	SLE FR 4	-0.00003	0	-0.04856	0	0.0001	0
117	SLE FR 5	-0.00014	-0.00011	-0.04866	0	0.0002	0
117	SLE QP 1	0	0	-0.04768	0	0	0
117	SLO 1	-0.0087	-0.4345	-0.04768	0.2652	0.0018	0
117	SLO 2	-0.0087	-0.4345	-0.04768	0.2652	0.0018	0
117	SLO 3	-0.0087	0.4345	-0.04768	-0.2652	0.0018	0
117	SLO 4	-0.0087	0.4345	-0.04768	-0.2652	0.0018	0
117	SLO 5	-0.00261	-1.44833	-0.04768	0.884	0.0005	0
117	SLO 6	-0.00261	-1.44833	-0.04768	0.884	0.0005	0
117	SLO 7	-0.00261	1.44833	-0.04768	-0.884	0.0005	0
117	SLO 8	-0.00261	1.44833	-0.04768	-0.884	0.0005	0
117	SLO 9	0.00261	-1.44833	-0.04768	0.884	-0.0005	0
117	SLO 10	0.00261	-1.44833	-0.04768	0.884	-0.0005	0
117	SLO 11	0.00261	1.44833	-0.04768	-0.884	-0.0005	0
117	SLO 12	0.00261	1.44833	-0.04768	-0.884	-0.0005	0
117	SLO 13	0.0087	-0.4345	-0.04768	0.2652	-0.0018	0
117	SLO 14	0.0087	-0.4345	-0.04768	0.2652	-0.0018	0
117	SLO 15	0.0087	0.4345	-0.04768	-0.2652	-0.0018	0
117	SLO 16	0.0087	0.4345	-0.04768	-0.2652	-0.0018	0
117	SLD 1	-0.00715	-0.40147	-0.04768	0.245	0.0015	0
117	SLD 2	-0.00715	-0.40147	-0.04768	0.245	0.0015	0
117	SLD 3	-0.00715	0.40147	-0.04768	-0.245	0.0015	0
117	SLD 4	-0.00715	0.40147	-0.04768	-0.245	0.0015	0
117	SLD 5	-0.00215	-1.33823	-0.04768	0.8168	0.0004	0
117	SLD 6	-0.00215	-1.33823	-0.04768	0.8168	0.0004	0
117	SLD 7	-0.00215	1.33823	-0.04768	-0.8168	0.0004	0
117	SLD 8	-0.00215	1.33823	-0.04768	-0.8168	0.0004	0
117	SLD 9	0.00215	-1.33823	-0.04768	0.8168	-0.0004	0
117	SLD 10	0.00215	-1.33823	-0.04768	0.8168	-0.0004	0
117	SLD 11	0.00215	1.33823	-0.04768	-0.8168	-0.0004	0
117	SLD 12	0.00215	1.33823	-0.04768	-0.8168	-0.0004	0
117	SLD 13	0.00715	-0.40147	-0.04768	0.245	-0.0015	0
117	SLD 14	0.00715	-0.40147	-0.04768	0.245	-0.0015	0
117	SLD 15	0.00715	0.40147	-0.04768	-0.245	-0.0015	0
117	SLD 16	0.00715	0.40147	-0.04768	-0.245	-0.0015	0
117	SLV 1	-0.01541	-1.05888	-0.04768	0.6463	0.0032	0
117	SLV 2	-0.01541	-1.05888	-0.04768	0.6463	0.0032	0
117	SLV 3	-0.01541	1.05888	-0.04768	-0.6463	0.0032	0
117	SLV 4	-0.01541	1.05888	-0.04768	-0.6463	0.0032	0
117	SLV 5	-0.00462	-3.52961	-0.04768	2.1543	0.001	0
117	SLV 6	-0.00462	-3.52961	-0.04768	2.1543	0.001	0
117	SLV 7	-0.00462	3.52961	-0.04768	-2.1543	0.001	0
117	SLV 8	-0.00462	3.52961	-0.04768	-2.1543	0.001	0
117	SLV 9	0.00462	-3.52961	-0.04768	2.1543	-0.001	0
117	SLV 10	0.00462	-3.52961	-0.04768	2.1543	-0.001	0
117	SLV 11	0.00462	3.52961	-0.04768	-2.1543	-0.001	0
117	SLV 12	0.00462	3.52961	-0.04768	-2.1543	-0.001	0
117	SLV 13	0.01541	-1.05888	-0.04768	0.6463	-0.0032	0
117	SLV 14	0.01541	-1.05888	-0.04768	0.6463	-0.0032	0
117	SLV 15	0.01541	1.05888	-0.04768	-0.6463	-0.0032	0
117	SLV 16	0.01541	1.05888	-0.04768	-0.6463	-0.0032	0
118	SLU 1	0	0	-0.04768	0	0	0
118	SLU 2	0	0	-0.48728	0	0	0
118	SLU 3	0	0.00001	-0.48728	0	0	0
118	SLU 4	0	0.00003	-0.04768	0	0	0
118	SLU 5	0	0.00003	-0.37738	0	0	0
118	SLU 6	-0.00013	0	-0.49178	0	0.0002	0
118	SLU 7	-0.00013	0.00001	-0.49178	0	0.0002	0
118	SLU 8	-0.00013	0.00003	-0.05217	0	0.0002	0

Nodo	Cont.	Spostamento			Rotazione		
Ind.	N.br.	ux	uy	uz	rx	ry	rz
118	SLU 9	-0.00013	0.00003	-0.38188	0	0.0002	0
118	SLU 10	-0.00025	0	-0.05667	0	0.0004	0
118	SLU 11	-0.00025	0	-0.38638	0	0.0004	0
118	SLU 12	-0.00025	0.00001	-0.05667	0	0.0004	0
118	SLU 13	-0.00025	0.00001	-0.38638	0	0.0004	0
118	SLU 14	-0.00021	-0.00016	-0.48852	0.0001	0.0003	0
118	SLU 15	-0.00021	-0.00015	-0.48852	0.0001	0.0003	0
118	SLU 16	-0.00021	-0.00013	-0.04891	0.0001	0.0003	0
118	SLU 17	-0.00021	-0.00013	-0.37862	0.0001	0.0003	0
118	SLU 18	-0.00034	-0.00016	-0.49302	0.0001	0.0005	0
118	SLU 19	-0.00034	-0.00015	-0.49302	0.0001	0.0005	0
118	SLU 20	-0.00034	-0.00013	-0.05341	0.0001	0.0005	0
118	SLU 21	-0.00034	-0.00013	-0.38312	0.0001	0.0005	0
118	SLU 22	-0.00047	-0.00016	-0.05791	0.0001	0.0007	0
118	SLU 23	-0.00047	-0.00016	-0.38762	0.0001	0.0007	0
118	SLU 24	-0.00047	-0.00015	-0.05791	0.0001	0.0007	0
118	SLU 25	-0.00047	-0.00015	-0.38762	0.0001	0.0007	0
118	SLU 26	-0.00053	-0.0004	-0.05076	0.0002	0.0008	0
118	SLU 27	-0.00053	-0.0004	-0.38047	0.0002	0.0008	0
118	SLU 28	-0.00053	-0.00039	-0.05076	0.0002	0.0008	0
118	SLU 29	-0.00053	-0.00039	-0.38047	0.0002	0.0008	0
118	SLU 30	-0.00066	-0.0004	-0.05526	0.0002	0.001	0
118	SLU 31	-0.00066	-0.0004	-0.38497	0.0002	0.001	0
118	SLU 32	-0.00066	-0.00039	-0.05526	0.0002	0.001	0
118	SLU 33	-0.00066	-0.00039	-0.38497	0.0002	0.001	0
118	SLU 34	0	0	-0.04768	0	0	0
118	SLU 35	0	0	-0.48728	0	0	0
118	SLU 36	0	0.00001	-0.48728	0	0	0
118	SLU 37	0	0.00003	-0.04768	0	0	0
118	SLU 38	0	0.00003	-0.37738	0	0	0
118	SLU 39	-0.00013	0	-0.49178	0	0.0002	0
118	SLU 40	-0.00013	0.00001	-0.49178	0	0.0002	0
118	SLU 41	-0.00013	0.00003	-0.05217	0	0.0002	0
118	SLU 42	-0.00013	0.00003	-0.38188	0	0.0002	0
118	SLU 43	-0.00025	0	-0.05667	0	0.0004	0
118	SLU 44	-0.00025	0	-0.38638	0	0.0004	0
118	SLU 45	-0.00025	0.00001	-0.05667	0	0.0004	0
118	SLU 46	-0.00025	0.00001	-0.38638	0	0.0004	0
118	SLU 47	-0.00021	-0.00016	-0.48852	0.0001	0.0003	0
118	SLU 48	-0.00021	-0.00015	-0.48852	0.0001	0.0003	0
118	SLU 49	-0.00021	-0.00013	-0.04891	0.0001	0.0003	0
118	SLU 50	-0.00021	-0.00013	-0.37862	0.0001	0.0003	0
118	SLU 51	-0.00034	-0.00016	-0.49302	0.0001	0.0005	0
118	SLU 52	-0.00034	-0.00015	-0.49302	0.0001	0.0005	0
118	SLU 53	-0.00034	-0.00013	-0.05341	0.0001	0.0005	0
118	SLU 54	-0.00034	-0.00013	-0.38312	0.0001	0.0005	0
118	SLU 55	-0.00047	-0.00016	-0.05791	0.0001	0.0007	0
118	SLU 56	-0.00047	-0.00016	-0.38762	0.0001	0.0007	0
118	SLU 57	-0.00047	-0.00015	-0.05791	0.0001	0.0007	0
118	SLU 58	-0.00047	-0.00015	-0.38762	0.0001	0.0007	0
118	SLU 59	-0.00053	-0.0004	-0.05076	0.0002	0.0008	0
118	SLU 60	-0.00053	-0.0004	-0.38047	0.0002	0.0008	0
118	SLU 61	-0.00053	-0.00039	-0.05076	0.0002	0.0008	0
118	SLU 62	-0.00053	-0.00039	-0.38047	0.0002	0.0008	0
118	SLU 63	-0.00066	-0.0004	-0.05526	0.0002	0.001	0
118	SLU 64	-0.00066	-0.0004	-0.38497	0.0002	0.001	0
118	SLU 65	-0.00066	-0.00039	-0.05526	0.0002	0.001	0
118	SLU 66	-0.00066	-0.00039	-0.38497	0.0002	0.001	0
118	SLU 67	0	0	-0.06198	0	0	0
118	SLU 68	0	0	-0.50159	0	0	0
118	SLU 69	0	0.00001	-0.50159	0	0	0
118	SLU 70	0	0.00003	-0.06198	0	0	0
118	SLU 71	0	0.00003	-0.39169	0	0	0
118	SLU 72	-0.00013	0	-0.50609	0	0.0002	0
118	SLU 73	-0.00013	0.00001	-0.50609	0	0.0002	0
118	SLU 74	-0.00013	0.00003	-0.06648	0	0.0002	0
118	SLU 75	-0.00013	0.00003	-0.39618	0	0.0002	0
118	SLU 76	-0.00025	0	-0.07098	0	0.0004	0
118	SLU 77	-0.00025	0	-0.40068	0	0.0004	0
118	SLU 78	-0.00025	0.00001	-0.07098	0	0.0004	0
118	SLU 79	-0.00025	0.00001	-0.40068	0	0.0004	0
118	SLU 80	-0.00021	-0.00016	-0.50282	0.0001	0.0003	0
118	SLU 81	-0.00021	-0.00015	-0.50282	0.0001	0.0003	0
118	SLU 82	-0.00021	-0.00013	-0.06321	0.0001	0.0003	0
118	SLU 83	-0.00021	-0.00013	-0.39292	0.0001	0.0003	0
118	SLU 84	-0.00034	-0.00016	-0.50732	0.0001	0.0005	0
118	SLU 85	-0.00034	-0.00015	-0.50732	0.0001	0.0005	0
118	SLU 86	-0.00034	-0.00013	-0.06771	0.0001	0.0005	0
118	SLU 87	-0.00034	-0.00013	-0.39742	0.0001	0.0005	0
118	SLU 88	-0.00047	-0.00016	-0.07221	0.0001	0.0007	0
118	SLU 89	-0.00047	-0.00016	-0.40192	0.0001	0.0007	0
118	SLU 90	-0.00047	-0.00015	-0.07221	0.0001	0.0007	0
118	SLU 91	-0.00047	-0.00015	-0.40192	0.0001	0.0007	0
118	SLU 92	-0.00053	-0.0004	-0.06507	0.0002	0.0008	0
118	SLU 93	-0.00053	-0.0004	-0.39477	0.0002	0.0008	0
118	SLU 94	-0.00053	-0.00039	-0.06507	0.0002	0.0008	0
118	SLU 95	-0.00053	-0.00039	-0.39477	0.0002	0.0008	0
118	SLU 96	-0.00066	-0.0004	-0.06957	0.0002	0.001	0
118	SLU 97	-0.00066	-0.0004	-0.39927	0.0002	0.001	0
118	SLU 98	-0.00066	-0.00039	-0.06957	0.0002	0.001	0
118	SLU 99	-0.00066	-0.00039	-0.39927	0.0002	0.001	0
118	SLU 100	0	0	-0.06198	0	0	0
118	SLU 101	0	0	-0.50159	0	0	0
118	SLU 102	0	0.00001	-0.50159	0	0	0
118	SLU 103	0	0.00003	-0.06198	0	0	0

Nodo	Cont.	Spostamento			Rotazione		
Ind.	N.br.	ux	uy	uz	rx	ry	rz
118	SLU 104	0	0.00003	-0.39169	0	0	0
118	SLU 105	-0.00013	0	-0.50609	0	0.0002	0
118	SLU 106	-0.00013	0.00001	-0.50609	0	0.0002	0
118	SLU 107	-0.00013	0.00003	-0.06648	0	0.0002	0
118	SLU 108	-0.00013	0.00003	-0.39618	0	0.0002	0
118	SLU 109	-0.00025	0	-0.07098	0	0.0004	0
118	SLU 110	-0.00025	0	-0.40068	0	0.0004	0
118	SLU 111	-0.00025	0.00001	-0.07098	0	0.0004	0
118	SLU 112	-0.00025	0.00001	-0.40068	0	0.0004	0
118	SLU 113	-0.00021	-0.00016	-0.50282	0.0001	0.0003	0
118	SLU 114	-0.00021	-0.00015	-0.50282	0.0001	0.0003	0
118	SLU 115	-0.00021	-0.00013	-0.06321	0.0001	0.0003	0
118	SLU 116	-0.00021	-0.00013	-0.39292	0.0001	0.0003	0
118	SLU 117	-0.00034	-0.00016	-0.50732	0.0001	0.0005	0
118	SLU 118	-0.00034	-0.00015	-0.50732	0.0001	0.0005	0
118	SLU 119	-0.00034	-0.00013	-0.06771	0.0001	0.0005	0
118	SLU 120	-0.00034	-0.00013	-0.39742	0.0001	0.0005	0
118	SLU 121	-0.00047	-0.00016	-0.07221	0.0001	0.0007	0
118	SLU 122	-0.00047	-0.00016	-0.40192	0.0001	0.0007	0
118	SLU 123	-0.00047	-0.00015	-0.07221	0.0001	0.0007	0
118	SLU 124	-0.00047	-0.00015	-0.40192	0.0001	0.0007	0
118	SLU 125	-0.00053	-0.0004	-0.06507	0.0002	0.0008	0
118	SLU 126	-0.00053	-0.0004	-0.39477	0.0002	0.0008	0
118	SLU 127	-0.00053	-0.00039	-0.06507	0.0002	0.0008	0
118	SLU 128	-0.00053	-0.00039	-0.39477	0.0002	0.0008	0
118	SLU 129	-0.00066	-0.0004	-0.06957	0.0002	0.001	0
118	SLU 130	-0.00066	-0.0004	-0.39927	0.0002	0.001	0
118	SLU 131	-0.00066	-0.00039	-0.06957	0.0002	0.001	0
118	SLU 132	-0.00066	-0.00039	-0.39927	0.0002	0.001	0
118	SLE RA 1	0	0	-0.04768	0	0	0
118	SLE RA 2	0	0	-0.34075	0	0	0
118	SLE RA 3	0	0.00001	-0.34075	0	0	0
118	SLE RA 4	0	0.00002	-0.04768	0	0	0
118	SLE RA 5	0	0.00002	-0.26748	0	0	0
118	SLE RA 6	-0.00008	0	-0.34375	0	0.0001	0
118	SLE RA 7	-0.00008	0.00001	-0.34375	0	0.0001	0
118	SLE RA 8	-0.00008	0.00002	-0.05068	0	0.0001	0
118	SLE RA 9	-0.00008	0.00002	-0.27048	0	0.0001	0
118	SLE RA 10	-0.00017	0	-0.05367	0	0.0003	0
118	SLE RA 11	-0.00017	0	-0.27348	0	0.0003	0
118	SLE RA 12	-0.00017	0.00001	-0.05367	0	0.0003	0
118	SLE RA 13	-0.00017	0.00001	-0.27348	0	0.0003	0
118	SLE RA 14	-0.00014	-0.00011	-0.34157	0.0001	0.0002	0
118	SLE RA 15	-0.00014	-0.0001	-0.34157	0.0001	0.0002	0
118	SLE RA 16	-0.00014	-0.00008	-0.0485	0	0.0002	0
118	SLE RA 17	-0.00014	-0.00008	-0.2683	0	0.0002	0
118	SLE RA 18	-0.00023	-0.00011	-0.34457	0.0001	0.0003	0
118	SLE RA 19	-0.00023	-0.0001	-0.34457	0.0001	0.0003	0
118	SLE RA 20	-0.00023	-0.00008	-0.0515	0	0.0003	0
118	SLE RA 21	-0.00023	-0.00008	-0.2713	0	0.0003	0
118	SLE RA 22	-0.00031	-0.00011	-0.0545	0.0001	0.0005	0
118	SLE RA 23	-0.00031	-0.00011	-0.2743	0.0001	0.0005	0
118	SLE RA 24	-0.00031	-0.0001	-0.0545	0	0.0005	0
118	SLE RA 25	-0.00031	-0.0001	-0.2743	0.0001	0.0005	0
118	SLE RA 26	-0.00035	-0.00027	-0.04973	0.0001	0.0005	0
118	SLE RA 27	-0.00035	-0.00027	-0.26954	0.0001	0.0005	0
118	SLE RA 28	-0.00035	-0.00026	-0.04973	0.0001	0.0005	0
118	SLE RA 29	-0.00035	-0.00026	-0.26954	0.0001	0.0005	0
118	SLE RA 30	-0.00044	-0.00027	-0.05273	0.0001	0.0007	0
118	SLE RA 31	-0.00044	-0.00027	-0.27254	0.0001	0.0007	0
118	SLE RA 32	-0.00044	-0.00026	-0.05273	0.0001	0.0007	0
118	SLE RA 33	-0.00044	-0.00026	-0.27254	0.0001	0.0007	0
118	SLE FR 1	0	0	-0.04768	0	0	0
118	SLE FR 2	0	0	-0.26748	0	0	0
118	SLE FR 3	0	0.00001	-0.04768	0	0	0
118	SLE FR 4	-0.00003	0	-0.04888	0	0.0001	0
118	SLE FR 5	-0.00014	-0.00011	-0.0485	0.0001	0.0002	0
118	SLE QP 1	0	0	-0.04768	0	0	0
118	SLO 1	-0.0087	-0.43447	-0.04768	0.2652	0.0018	0
118	SLO 2	-0.0087	-0.43447	-0.04768	0.2652	0.0018	0
118	SLO 3	-0.0087	0.43447	-0.04768	-0.2652	0.0018	0
118	SLO 4	-0.0087	0.43447	-0.04768	-0.2652	0.0018	0
118	SLO 5	-0.00261	-1.44824	-0.04768	0.8838	0.0005	0
118	SLO 6	-0.00261	-1.44824	-0.04768	0.8838	0.0005	0
118	SLO 7	-0.00261	1.44824	-0.04768	-0.8838	0.0005	0
118	SLO 8	-0.00261	1.44824	-0.04768	-0.8838	0.0005	0
118	SLO 9	0.00261	-1.44824	-0.04768	0.8838	-0.0005	0
118	SLO 10	0.00261	-1.44824	-0.04768	0.8838	-0.0005	0
118	SLO 11	0.00261	1.44824	-0.04768	-0.8838	-0.0005	0
118	SLO 12	0.00261	1.44824	-0.04768	-0.8838	-0.0005	0
118	SLO 13	0.0087	-0.43447	-0.04768	0.2652	-0.0018	0
118	SLO 14	0.0087	-0.43447	-0.04768	0.2652	-0.0018	0
118	SLO 15	0.0087	0.43447	-0.04768	-0.2652	-0.0018	0
118	SLO 16	0.0087	0.43447	-0.04768	-0.2652	-0.0018	0
118	SLD 1	-0.00715	-0.40145	-0.04768	0.245	0.0015	0
118	SLD 2	-0.00715	-0.40145	-0.04768	0.245	0.0015	0
118	SLD 3	-0.00715	0.40145	-0.04768	-0.245	0.0015	0
118	SLD 4	-0.00715	0.40145	-0.04768	-0.245	0.0015	0
118	SLD 5	-0.00215	-1.33816	-0.04768	0.8167	0.0004	0
118	SLD 6	-0.00215	-1.33816	-0.04768	0.8167	0.0004	0
118	SLD 7	-0.00215	1.33816	-0.04768	-0.8167	0.0004	0
118	SLD 8	-0.00215	1.33816	-0.04768	-0.8167	0.0004	0
118	SLD 9	0.00215	-1.33816	-0.04768	0.8167	-0.0004	0
118	SLD 10	0.00215	-1.33816	-0.04768	0.8167	-0.0004	0
118	SLD 11	0.00215	1.33816	-0.04768	-0.8167	-0.0004	0

Nodo	Cont.	Spostamento			Rotazione		
Ind.	N.br.	ux	uy	uz	rx	ry	rz
118	SLD 12	0.00215	1.33816	-0.04768	-0.8167	-0.0004	0
118	SLD 13	0.00715	-0.40145	-0.04768	0.245	-0.0015	0
118	SLD 14	0.00715	-0.40145	-0.04768	0.245	-0.0015	0
118	SLD 15	0.00715	0.40145	-0.04768	-0.245	-0.0015	0
118	SLD 16	0.00715	0.40145	-0.04768	-0.245	-0.0015	0
118	SLV 1	-0.01541	-1.05882	-0.04768	0.6462	0.0032	0
118	SLV 2	-0.01541	-1.05882	-0.04768	0.6462	0.0032	0
118	SLV 3	-0.01541	1.05882	-0.04768	-0.6462	0.0032	0
118	SLV 4	-0.01541	1.05882	-0.04768	-0.6462	0.0032	0
118	SLV 5	-0.00462	-3.5294	-0.04768	2.1539	0.001	0
118	SLV 6	-0.00462	-3.5294	-0.04768	2.1539	0.001	0
118	SLV 7	-0.00462	3.5294	-0.04768	-2.1539	0.001	0
118	SLV 8	-0.00462	3.5294	-0.04768	-2.1539	0.001	0
118	SLV 9	0.00462	-3.5294	-0.04768	2.1539	-0.001	0
118	SLV 10	0.00462	-3.5294	-0.04768	2.1539	-0.001	0
118	SLV 11	0.00462	3.5294	-0.04768	-2.1539	-0.001	0
118	SLV 12	0.00462	3.5294	-0.04768	-2.1539	-0.001	0
118	SLV 13	0.01541	-1.05882	-0.04768	0.6462	-0.0032	0
118	SLV 14	0.01541	-1.05882	-0.04768	0.6462	-0.0032	0
118	SLV 15	0.01541	1.05882	-0.04768	-0.6462	-0.0032	0
118	SLV 16	0.01541	1.05882	-0.04768	-0.6462	-0.0032	0
119	SLU 1	0	0	-0.04768	0	0	0
119	SLU 2	0	0	-0.59128	0	0	0
119	SLU 3	0	0.00001	-0.59128	0	0	0
119	SLU 4	0	0.00003	-0.04768	0	0	0
119	SLU 5	0	0.00003	-0.45538	0	0	0
119	SLU 6	0	0	-0.59638	0	0	0
119	SLU 7	0	0.00001	-0.59638	0	0	0
119	SLU 8	0	0.00003	-0.05278	0	0	0
119	SLU 9	0	0.00003	-0.46048	0	0	0
119	SLU 10	0	0	-0.05788	0	0	0
119	SLU 11	0	0	-0.46558	0	0	0
119	SLU 12	0	0.00001	-0.05788	0	0	0
119	SLU 13	0	0.00001	-0.46558	0	0	0
119	SLU 14	0	-0.00016	-0.59128	0.0001	0	0
119	SLU 15	0	-0.00015	-0.59128	0.0001	0	0
119	SLU 16	0	-0.00013	-0.04768	0.0001	0	0
119	SLU 17	0	-0.00013	-0.45538	0.0001	0	0
119	SLU 18	0	-0.00016	-0.59638	0.0001	0	0
119	SLU 19	0	-0.00015	-0.59638	0.0001	0	0
119	SLU 20	0	-0.00013	-0.05278	0.0001	0	0
119	SLU 21	0	-0.00013	-0.46048	0.0001	0	0
119	SLU 22	0	-0.00016	-0.05788	0.0001	0	0
119	SLU 23	0	-0.00016	-0.46558	0.0001	0	0
119	SLU 24	0	-0.00015	-0.05788	0.0001	0	0
119	SLU 25	0	-0.00015	-0.46558	0.0001	0	0
119	SLU 26	0	-0.0004	-0.04768	0.0002	0	0
119	SLU 27	0	-0.0004	-0.45538	0.0002	0	0
119	SLU 28	0	-0.00039	-0.04768	0.0002	0	0
119	SLU 29	0	-0.00039	-0.45538	0.0002	0	0
119	SLU 30	0	-0.0004	-0.05278	0.0002	0	0
119	SLU 31	0	-0.0004	-0.46048	0.0002	0	0
119	SLU 32	0	-0.00039	-0.05278	0.0002	0	0
119	SLU 33	0	-0.00039	-0.46048	0.0002	0	0
119	SLU 34	0	0	-0.04768	0	0	0
119	SLU 35	0	0	-0.59128	0	0	0
119	SLU 36	0	0.00001	-0.59128	0	0	0
119	SLU 37	0	0.00003	-0.04768	0	0	0
119	SLU 38	0	0.00003	-0.45538	0	0	0
119	SLU 39	0	0	-0.59638	0	0	0
119	SLU 40	0	0.00001	-0.59638	0	0	0
119	SLU 41	0	0.00003	-0.05278	0	0	0
119	SLU 42	0	0.00003	-0.46048	0	0	0
119	SLU 43	0	0	-0.05788	0	0	0
119	SLU 44	0	0	-0.46558	0	0	0
119	SLU 45	0	0.00001	-0.05788	0	0	0
119	SLU 46	0	0.00001	-0.46558	0	0	0
119	SLU 47	0	-0.00016	-0.59128	0.0001	0	0
119	SLU 48	0	-0.00015	-0.59128	0.0001	0	0
119	SLU 49	0	-0.00013	-0.04768	0.0001	0	0
119	SLU 50	0	-0.00013	-0.45538	0.0001	0	0
119	SLU 51	0	-0.00016	-0.59638	0.0001	0	0
119	SLU 52	0	-0.00015	-0.59638	0.0001	0	0
119	SLU 53	0	-0.00013	-0.05278	0.0001	0	0
119	SLU 54	0	-0.00013	-0.46048	0.0001	0	0
119	SLU 55	0	-0.00016	-0.05788	0.0001	0	0
119	SLU 56	0	-0.00016	-0.46558	0.0001	0	0
119	SLU 57	0	-0.00015	-0.05788	0.0001	0	0
119	SLU 58	0	-0.00015	-0.46558	0.0001	0	0
119	SLU 59	0	-0.0004	-0.04768	0.0002	0	0
119	SLU 60	0	-0.0004	-0.45538	0.0002	0	0
119	SLU 61	0	-0.00039	-0.04768	0.0002	0	0
119	SLU 62	0	-0.00039	-0.45538	0.0002	0	0
119	SLU 63	0	-0.0004	-0.05278	0.0002	0	0
119	SLU 64	0	-0.0004	-0.46048	0.0002	0	0
119	SLU 65	0	-0.00039	-0.05278	0.0002	0	0
119	SLU 66	0	-0.00039	-0.46048	0.0002	0	0
119	SLU 67	0	0	-0.06198	0	0	0
119	SLU 68	0	0	-0.60558	0	0	0
119	SLU 69	0	0.00001	-0.60558	0	0	0
119	SLU 70	0	0.00004	-0.06198	0	0	0
119	SLU 71	0	0.00003	-0.46968	0	0	0
119	SLU 72	0	0	-0.61068	0	0	0
119	SLU 73	0	0.00001	-0.61068	0	0	0
119	SLU 74	0	0.00004	-0.06708	0	0	0

Nodo	Cont.	Spostamento			Rotazione		
Ind.	N.br.	ux	uy	uz	rx	ry	rz
119	SLU 75	0	0.00003	-0.47478	0	0	0
119	SLU 76	0	0	-0.07218	0	0	0
119	SLU 77	0	0	-0.47988	0	0	0
119	SLU 78	0	0.00001	-0.07218	0	0	0
119	SLU 79	0	0.00001	-0.47988	0	0	0
119	SLU 80	0	-0.00016	-0.60558	0.0001	0	0
119	SLU 81	0	-0.00015	-0.60558	0.0001	0	0
119	SLU 82	0	-0.00013	-0.06198	0.0001	0	0
119	SLU 83	0	-0.00013	-0.46968	0.0001	0	0
119	SLU 84	0	-0.00016	-0.61068	0.0001	0	0
119	SLU 85	0	-0.00015	-0.61068	0.0001	0	0
119	SLU 86	0	-0.00013	-0.06708	0.0001	0	0
119	SLU 87	0	-0.00013	-0.47478	0.0001	0	0
119	SLU 88	0	-0.00016	-0.07218	0.0001	0	0
119	SLU 89	0	-0.00016	-0.47988	0.0001	0	0
119	SLU 90	0	-0.00015	-0.07218	0.0001	0	0
119	SLU 91	0	-0.00015	-0.47988	0.0001	0	0
119	SLU 92	0	-0.0004	-0.06198	0.0002	0	0
119	SLU 93	0	-0.0004	-0.46968	0.0002	0	0
119	SLU 94	0	-0.00039	-0.06198	0.0002	0	0
119	SLU 95	0	-0.00039	-0.46968	0.0002	0	0
119	SLU 96	0	-0.0004	-0.06708	0.0002	0	0
119	SLU 97	0	-0.0004	-0.47478	0.0002	0	0
119	SLU 98	0	-0.00039	-0.06708	0.0002	0	0
119	SLU 99	0	-0.00039	-0.47478	0.0002	0	0
119	SLU 100	0	0	-0.06198	0	0	0
119	SLU 101	0	0	-0.60558	0	0	0
119	SLU 102	0	0.00001	-0.60558	0	0	0
119	SLU 103	0	0.00004	-0.06198	0	0	0
119	SLU 104	0	0.00003	-0.46968	0	0	0
119	SLU 105	0	0	-0.61068	0	0	0
119	SLU 106	0	0.00001	-0.61068	0	0	0
119	SLU 107	0	0.00004	-0.06708	0	0	0
119	SLU 108	0	0.00003	-0.47478	0	0	0
119	SLU 109	0	0	-0.07218	0	0	0
119	SLU 110	0	0	-0.47988	0	0	0
119	SLU 111	0	0.00001	-0.07218	0	0	0
119	SLU 112	0	0.00001	-0.47988	0	0	0
119	SLU 113	0	-0.00016	-0.60558	0.0001	0	0
119	SLU 114	0	-0.00015	-0.60558	0.0001	0	0
119	SLU 115	0	-0.00013	-0.06198	0.0001	0	0
119	SLU 116	0	-0.00013	-0.46968	0.0001	0	0
119	SLU 117	0	-0.00016	-0.61068	0.0001	0	0
119	SLU 118	0	-0.00015	-0.61068	0.0001	0	0
119	SLU 119	0	-0.00013	-0.06708	0.0001	0	0
119	SLU 120	0	-0.00013	-0.47478	0.0001	0	0
119	SLU 121	0	-0.00016	-0.07218	0.0001	0	0
119	SLU 122	0	-0.00016	-0.47988	0.0001	0	0
119	SLU 123	0	-0.00015	-0.07218	0.0001	0	0
119	SLU 124	0	-0.00015	-0.47988	0.0001	0	0
119	SLU 125	0	-0.0004	-0.06198	0.0002	0	0
119	SLU 126	0	-0.0004	-0.46968	0.0002	0	0
119	SLU 127	0	-0.00039	-0.06198	0.0002	0	0
119	SLU 128	0	-0.00039	-0.46968	0.0002	0	0
119	SLU 129	0	-0.0004	-0.06708	0.0002	0	0
119	SLU 130	0	-0.0004	-0.47478	0.0002	0	0
119	SLU 131	0	-0.00039	-0.06708	0.0002	0	0
119	SLU 132	0	-0.00039	-0.47478	0.0002	0	0
119	SLE RA 1	0	0	-0.04768	0	0	0
119	SLE RA 2	0	0	-0.41008	0	0	0
119	SLE RA 3	0	0.00001	-0.41008	0	0	0
119	SLE RA 4	0	0.00002	-0.04768	0	0	0
119	SLE RA 5	0	0.00002	-0.31948	0	0	0
119	SLE RA 6	0	0	-0.41348	0	0	0
119	SLE RA 7	0	0.00001	-0.41348	0	0	0
119	SLE RA 8	0	0.00002	-0.05108	0	0	0
119	SLE RA 9	0	0.00002	-0.32288	0	0	0
119	SLE RA 10	0	0	-0.05448	0	0	0
119	SLE RA 11	0	0	-0.32628	0	0	0
119	SLE RA 12	0	0.00001	-0.05448	0	0	0
119	SLE RA 13	0	0.00001	-0.32628	0	0	0
119	SLE RA 14	0	-0.00011	-0.41008	0.0001	0	0
119	SLE RA 15	0	-0.0001	-0.41008	0.0001	0	0
119	SLE RA 16	0	-0.00008	-0.04768	0.0001	0	0
119	SLE RA 17	0	-0.00008	-0.31948	0.0001	0	0
119	SLE RA 18	0	-0.00011	-0.41348	0.0001	0	0
119	SLE RA 19	0	-0.0001	-0.41348	0.0001	0	0
119	SLE RA 20	0	-0.00008	-0.05108	0.0001	0	0
119	SLE RA 21	0	-0.00008	-0.32288	0.0001	0	0
119	SLE RA 22	0	-0.00011	-0.05448	0.0001	0	0
119	SLE RA 23	0	-0.00011	-0.32628	0.0001	0	0
119	SLE RA 24	0	-0.0001	-0.05448	0.0001	0	0
119	SLE RA 25	0	-0.0001	-0.32628	0.0001	0	0
119	SLE RA 26	0	-0.00027	-0.04768	0.0001	0	0
119	SLE RA 27	0	-0.00027	-0.31948	0.0001	0	0
119	SLE RA 28	0	-0.00026	-0.04768	0.0001	0	0
119	SLE RA 29	0	-0.00026	-0.31948	0.0001	0	0
119	SLE RA 30	0	-0.00027	-0.05108	0.0001	0	0
119	SLE RA 31	0	-0.00027	-0.32288	0.0001	0	0
119	SLE RA 32	0	-0.00026	-0.05108	0.0001	0	0
119	SLE RA 33	0	-0.00026	-0.32288	0.0001	0	0
119	SLE FR 1	0	0	-0.04768	0	0	0
119	SLE FR 2	0	0	-0.31948	0	0	0
119	SLE FR 3	0	0.00001	-0.04768	0	0	0
119	SLE FR 4	0	0	-0.04904	0	0	0

Nodo	Cont.	Spostamento			Rotazione		
Ind.	N.br.	ux	uy	uz	rx	ry	rz
119	SLE FR 5	0	-0.00011	-0.04768	0.0001	0	0
119	SLE QP 1	0	0	-0.04768	0	0	0
119	SLO 1	-0.0087	-0.4345	-0.04768	0.2652	0.0018	0
119	SLO 2	-0.0087	-0.4345	-0.04768	0.2652	0.0018	0
119	SLO 3	-0.0087	0.4345	-0.04768	-0.2652	0.0018	0
119	SLO 4	-0.0087	0.4345	-0.04768	-0.2652	0.0018	0
119	SLO 5	-0.00261	-1.44833	-0.04768	0.884	0.0005	0
119	SLO 6	-0.00261	-1.44833	-0.04768	0.884	0.0005	0
119	SLO 7	-0.00261	1.44833	-0.04768	-0.884	0.0005	0
119	SLO 8	-0.00261	1.44833	-0.04768	-0.884	0.0005	0
119	SLO 9	0.00261	-1.44833	-0.04768	0.884	-0.0005	0
119	SLO 10	0.00261	-1.44833	-0.04768	0.884	-0.0005	0
119	SLO 11	0.00261	1.44833	-0.04768	-0.884	-0.0005	0
119	SLO 12	0.00261	1.44833	-0.04768	-0.884	-0.0005	0
119	SLO 13	0.0087	-0.4345	-0.04768	0.2652	-0.0018	0
119	SLO 14	0.0087	-0.4345	-0.04768	0.2652	-0.0018	0
119	SLO 15	0.0087	0.4345	-0.04768	-0.2652	-0.0018	0
119	SLO 16	0.0087	0.4345	-0.04768	-0.2652	-0.0018	0
119	SLD 1	-0.00715	-0.40147	-0.04768	0.245	0.0015	0
119	SLD 2	-0.00715	-0.40147	-0.04768	0.245	0.0015	0
119	SLD 3	-0.00715	0.40147	-0.04768	-0.245	0.0015	0
119	SLD 4	-0.00715	0.40147	-0.04768	-0.245	0.0015	0
119	SLD 5	-0.00215	-1.33823	-0.04768	0.8168	0.0004	0
119	SLD 6	-0.00215	-1.33823	-0.04768	0.8168	0.0004	0
119	SLD 7	-0.00215	1.33823	-0.04768	-0.8168	0.0004	0
119	SLD 8	-0.00215	1.33823	-0.04768	-0.8168	0.0004	0
119	SLD 9	0.00215	-1.33823	-0.04768	0.8168	-0.0004	0
119	SLD 10	0.00215	-1.33823	-0.04768	0.8168	-0.0004	0
119	SLD 11	0.00215	1.33823	-0.04768	-0.8168	-0.0004	0
119	SLD 12	0.00215	1.33823	-0.04768	-0.8168	-0.0004	0
119	SLD 13	0.00715	-0.40147	-0.04768	0.245	-0.0015	0
119	SLD 14	0.00715	-0.40147	-0.04768	0.245	-0.0015	0
119	SLD 15	0.00715	0.40147	-0.04768	-0.245	-0.0015	0
119	SLD 16	0.00715	0.40147	-0.04768	-0.245	-0.0015	0
119	SLV 1	-0.01541	-1.05888	-0.04768	0.6463	0.0032	0
119	SLV 2	-0.01541	-1.05888	-0.04768	0.6463	0.0032	0
119	SLV 3	-0.01541	1.05888	-0.04768	-0.6463	0.0032	0
119	SLV 4	-0.01541	1.05888	-0.04768	-0.6463	0.0032	0
119	SLV 5	-0.00462	-3.52961	-0.04768	2.1543	0.001	0
119	SLV 6	-0.00462	-3.52961	-0.04768	2.1543	0.001	0
119	SLV 7	-0.00462	3.52961	-0.04768	-2.1543	0.001	0
119	SLV 8	-0.00462	3.52961	-0.04768	-2.1543	0.001	0
119	SLV 9	0.00462	-3.52961	-0.04768	2.1543	-0.001	0
119	SLV 10	0.00462	-3.52961	-0.04768	2.1543	-0.001	0
119	SLV 11	0.00462	3.52961	-0.04768	-2.1543	-0.001	0
119	SLV 12	0.00462	3.52961	-0.04768	-2.1543	-0.001	0
119	SLV 13	0.01541	-1.05888	-0.04768	0.6463	-0.0032	0
119	SLV 14	0.01541	-1.05888	-0.04768	0.6463	-0.0032	0
119	SLV 15	0.01541	1.05888	-0.04768	-0.6463	-0.0032	0
119	SLV 16	0.01541	1.05888	-0.04768	-0.6463	-0.0032	0
120	SLU 1	0	0	-0.04742	0	0	0
120	SLU 2	0	0	-0.3192	0	0	0
120	SLU 3	0	0.00001	-0.32062	0	0	0
120	SLU 4	0	0.00004	-0.05097	0	0	0
120	SLU 5	0	0.00004	-0.25481	0	0	0
120	SLU 6	0	0	-0.32431	0	0	0
120	SLU 7	0	0.00001	-0.32573	0	0	0
120	SLU 8	0	0.00004	-0.05608	0	0	0
120	SLU 9	0	0.00004	-0.25992	0	0	0
120	SLU 10	0.00001	0	-0.05764	0	0	0
120	SLU 11	0.00001	0	-0.26147	0	0	0
120	SLU 12	0.00001	0.00002	-0.05906	0	0	0
120	SLU 13	0.00001	0.00001	-0.26289	0	0	0
120	SLU 14	0.00001	-0.00016	-0.32146	0.0001	0	0
120	SLU 15	0.00001	-0.00015	-0.32288	0.0001	0	0
120	SLU 16	0.00001	-0.00012	-0.05323	0.0001	0	0
120	SLU 17	0.00001	-0.00012	-0.25707	0.0001	0	0
120	SLU 18	0.00001	-0.00016	-0.32657	0.0001	0	0
120	SLU 19	0.00001	-0.00015	-0.32799	0.0001	0	0
120	SLU 20	0.00001	-0.00012	-0.05834	0.0001	0	0
120	SLU 21	0.00001	-0.00012	-0.26218	0.0001	0	0
120	SLU 22	0.00001	-0.00016	-0.0599	0.0001	0	0
120	SLU 23	0.00001	-0.00016	-0.26373	0.0001	0	0
120	SLU 24	0.00001	-0.00014	-0.06132	0.0001	0	0
120	SLU 25	0.00001	-0.00015	-0.26515	0.0001	0	0
120	SLU 26	0.00002	-0.0004	-0.05307	0.0002	0	0
120	SLU 27	0.00002	-0.0004	-0.2569	0.0002	0	0
120	SLU 28	0.00002	-0.00039	-0.05449	0.0002	0	0
120	SLU 29	0.00002	-0.00039	-0.25833	0.0002	0	0
120	SLU 30	0.00002	-0.0004	-0.05818	0.0002	0	0
120	SLU 31	0.00002	-0.0004	-0.26201	0.0002	0	0
120	SLU 32	0.00002	-0.00039	-0.0596	0.0002	0	0
120	SLU 33	0.00002	-0.00039	-0.26344	0.0002	0	0
120	SLU 34	0	0	-0.04742	0	0	0
120	SLU 35	0	0	-0.3192	0	0	0
120	SLU 36	0	0.00001	-0.32062	0	0	0
120	SLU 37	0	0.00004	-0.05097	0	0	0
120	SLU 38	0	0.00004	-0.25481	0	0	0
120	SLU 39	0	0	-0.32431	0	0	0
120	SLU 40	0	0.00001	-0.32573	0	0	0
120	SLU 41	0	0.00004	-0.05608	0	0	0
120	SLU 42	0	0.00004	-0.25992	0	0	0
120	SLU 43	0.00001	0	-0.05764	0	0	0
120	SLU 44	0.00001	0	-0.26147	0	0	0
120	SLU 45	0.00001	0.00002	-0.05906	0	0	0

Nodo	Cont.	Spostamento			Rotazione		
Ind.	N.br.	ux	uy	uz	rx	ry	rz
120	SLU 46	0.00001	0.00001	-0.26289	0	0	0
120	SLU 47	0.00001	-0.00016	-0.32146	0.0001	0	0
120	SLU 48	0.00001	-0.00015	-0.32288	0.0001	0	0
120	SLU 49	0.00001	-0.00012	-0.05323	0.0001	0	0
120	SLU 50	0.00001	-0.00012	-0.25707	0.0001	0	0
120	SLU 51	0.00001	-0.00016	-0.32657	0.0001	0	0
120	SLU 52	0.00001	-0.00015	-0.32799	0.0001	0	0
120	SLU 53	0.00001	-0.00012	-0.05834	0.0001	0	0
120	SLU 54	0.00001	-0.00012	-0.26218	0.0001	0	0
120	SLU 55	0.00001	-0.00016	-0.0599	0.0001	0	0
120	SLU 56	0.00001	-0.00016	-0.26373	0.0001	0	0
120	SLU 57	0.00001	-0.00014	-0.06132	0.0001	0	0
120	SLU 58	0.00001	-0.00015	-0.26515	0.0001	0	0
120	SLU 59	0.00002	-0.0004	-0.05307	0.0002	0	0
120	SLU 60	0.00002	-0.0004	-0.2569	0.0002	0	0
120	SLU 61	0.00002	-0.00039	-0.05449	0.0002	0	0
120	SLU 62	0.00002	-0.00039	-0.25833	0.0002	0	0
120	SLU 63	0.00002	-0.0004	-0.05818	0.0002	0	0
120	SLU 64	0.00002	-0.0004	-0.26201	0.0002	0	0
120	SLU 65	0.00002	-0.00039	-0.0596	0.0002	0	0
120	SLU 66	0.00002	-0.00039	-0.26344	0.0002	0	0
120	SLU 67	0	0	-0.06164	0	0	0
120	SLU 68	0	0	-0.33342	0	0	0
120	SLU 69	0	0.00001	-0.33484	0	0	0
120	SLU 70	0	0.00004	-0.0652	0	0	0
120	SLU 71	0	0.00004	-0.26903	0	0	0
120	SLU 72	0	0	-0.33853	0	0	0
120	SLU 73	0	0.00002	-0.33995	0	0	0
120	SLU 74	0	0.00004	-0.07031	0	0	0
120	SLU 75	0	0.00004	-0.27414	0	0	0
120	SLU 76	0.00001	0	-0.07186	0	0	0
120	SLU 77	0.00001	0	-0.2757	0	0	0
120	SLU 78	0.00001	0.00002	-0.07328	0	0	0
120	SLU 79	0.00001	0.00002	-0.27712	0	0	0
120	SLU 80	0.00001	-0.00016	-0.33568	0.0001	0	0
120	SLU 81	0.00001	-0.00015	-0.33711	0.0001	0	0
120	SLU 82	0.00001	-0.00012	-0.06746	0.0001	0	0
120	SLU 83	0.00001	-0.00012	-0.27129	0.0001	0	0
120	SLU 84	0.00001	-0.00016	-0.34079	0.0001	0	0
120	SLU 85	0.00001	-0.00015	-0.34221	0.0001	0	0
120	SLU 86	0.00001	-0.00012	-0.07257	0.0001	0	0
120	SLU 87	0.00001	-0.00012	-0.2764	0.0001	0	0
120	SLU 88	0.00001	-0.00016	-0.07412	0.0001	0	0
120	SLU 89	0.00001	-0.00016	-0.27796	0.0001	0	0
120	SLU 90	0.00001	-0.00014	-0.07554	0.0001	0	0
120	SLU 91	0.00001	-0.00014	-0.27938	0.0001	0	0
120	SLU 92	0.00002	-0.0004	-0.06729	0.0002	0	0
120	SLU 93	0.00002	-0.0004	-0.27113	0.0002	0	0
120	SLU 94	0.00002	-0.00038	-0.06871	0.0002	0	0
120	SLU 95	0.00002	-0.00039	-0.27255	0.0002	0	0
120	SLU 96	0.00002	-0.0004	-0.0724	0.0002	0	0
120	SLU 97	0.00002	-0.0004	-0.27624	0.0002	0	0
120	SLU 98	0.00002	-0.00038	-0.07382	0.0002	0	0
120	SLU 99	0.00002	-0.00039	-0.27766	0.0002	0	0
120	SLU 100	0	0	-0.06164	0	0	0
120	SLU 101	0	0	-0.33342	0	0	0
120	SLU 102	0	0.00001	-0.33484	0	0	0
120	SLU 103	0	0.00004	-0.0652	0	0	0
120	SLU 104	0	0.00004	-0.26903	0	0	0
120	SLU 105	0	0	-0.33853	0	0	0
120	SLU 106	0	0.00002	-0.33995	0	0	0
120	SLU 107	0	0.00004	-0.07031	0	0	0
120	SLU 108	0	0.00004	-0.27414	0	0	0
120	SLU 109	0.00001	0	-0.07186	0	0	0
120	SLU 110	0.00001	0	-0.2757	0	0	0
120	SLU 111	0.00001	0.00002	-0.07328	0	0	0
120	SLU 112	0.00001	0.00002	-0.27712	0	0	0
120	SLU 113	0.00001	-0.00016	-0.33568	0.0001	0	0
120	SLU 114	0.00001	-0.00015	-0.33711	0.0001	0	0
120	SLU 115	0.00001	-0.00012	-0.06746	0.0001	0	0
120	SLU 116	0.00001	-0.00012	-0.27129	0.0001	0	0
120	SLU 117	0.00001	-0.00016	-0.34079	0.0001	0	0
120	SLU 118	0.00001	-0.00015	-0.34221	0.0001	0	0
120	SLU 119	0.00001	-0.00012	-0.07257	0.0001	0	0
120	SLU 120	0.00001	-0.00012	-0.2764	0.0001	0	0
120	SLU 121	0.00001	-0.00016	-0.07412	0.0001	0	0
120	SLU 122	0.00001	-0.00016	-0.27796	0.0001	0	0
120	SLU 123	0.00001	-0.00014	-0.07554	0.0001	0	0
120	SLU 124	0.00001	-0.00014	-0.27938	0.0001	0	0
120	SLU 125	0.00002	-0.0004	-0.06729	0.0002	0	0
120	SLU 126	0.00002	-0.0004	-0.27113	0.0002	0	0
120	SLU 127	0.00002	-0.00038	-0.06871	0.0002	0	0
120	SLU 128	0.00002	-0.00039	-0.27255	0.0002	0	0
120	SLU 129	0.00002	-0.0004	-0.0724	0.0002	0	0
120	SLU 130	0.00002	-0.0004	-0.27624	0.0002	0	0
120	SLU 131	0.00002	-0.00038	-0.07382	0.0002	0	0
120	SLU 132	0.00002	-0.00039	-0.27766	0.0002	0	0
120	SLE RA 1	0	0	-0.04742	0	0	0
120	SLE RA 2	0	0	-0.2286	0	0	0
120	SLE RA 3	0	0.00001	-0.22955	0	0	0
120	SLE RA 4	0	0.00002	-0.04979	0	0	0
120	SLE RA 5	0	0.00002	-0.18568	0	0	0
120	SLE RA 6	0	0	-0.23201	0	0	0
120	SLE RA 7	0	0.00001	-0.23296	0	0	0
120	SLE RA 8	0	0.00002	-0.05319	0	0	0

Nodo	Cont.	Spostamento			Rotazione		
Ind.	N.br.	ux	uy	uz	rx	ry	rz
120	SLE RA 9	0	0.00002	-0.18908	0	0	0
120	SLE RA 10	0	0	-0.05423	0	0	0
120	SLE RA 11	0	0	-0.19012	0	0	0
120	SLE RA 12	0	0.00001	-0.05518	0	0	0
120	SLE RA 13	0	0.00001	-0.19107	0	0	0
120	SLE RA 14	0	-0.00011	-0.23011	0.0001	0	0
120	SLE RA 15	0	-0.0001	-0.23106	0.0001	0	0
120	SLE RA 16	0	-0.00008	-0.05129	0.0001	0	0
120	SLE RA 17	0	-0.00008	-0.18718	0.0001	0	0
120	SLE RA 18	0.00001	-0.00011	-0.23352	0.0001	0	0
120	SLE RA 19	0.00001	-0.0001	-0.23447	0.0001	0	0
120	SLE RA 20	0.00001	-0.00008	-0.0547	0.0001	0	0
120	SLE RA 21	0.00001	-0.00008	-0.19059	0.0001	0	0
120	SLE RA 22	0.00001	-0.00011	-0.05574	0.0001	0	0
120	SLE RA 23	0.00001	-0.00011	-0.19163	0.0001	0	0
120	SLE RA 24	0.00001	-0.0001	-0.05668	0.0001	0	0
120	SLE RA 25	0.00001	-0.0001	-0.19258	0.0001	0	0
120	SLE RA 26	0.00001	-0.00027	-0.05118	0.0002	0	0
120	SLE RA 27	0.00001	-0.00027	-0.18707	0.0002	0	0
120	SLE RA 28	0.00001	-0.00026	-0.05213	0.0002	0	0
120	SLE RA 29	0.00001	-0.00026	-0.18802	0.0002	0	0
120	SLE RA 30	0.00001	-0.00027	-0.05459	0.0002	0	0
120	SLE RA 31	0.00001	-0.00027	-0.19048	0.0002	0	0
120	SLE RA 32	0.00001	-0.00026	-0.05554	0.0002	0	0
120	SLE RA 33	0.00001	-0.00026	-0.19143	0.0002	0	0
120	SLE FR 1	0	0	-0.04742	0	0	0
120	SLE FR 2	0	0	-0.18331	0	0	0
120	SLE FR 3	0	0.00001	-0.04836	0	0	0
120	SLE FR 4	0	0	-0.04878	0	0	0
120	SLE FR 5	0	-0.00011	-0.04892	0.0001	0	0
120	SLE QP 1	0	0	-0.04742	0	0	0
120	SLO 1	-0.00866	-0.43457	-0.04742	0.2654	0.0018	0
120	SLO 2	-0.00866	-0.43457	-0.04742	0.2654	0.0018	0
120	SLO 3	-0.00866	0.43458	-0.04742	-0.2653	0.0018	0
120	SLO 4	-0.00866	0.43458	-0.04742	-0.2653	0.0018	0
120	SLO 5	-0.0026	-1.44858	-0.04742	0.8844	0.0005	0
120	SLO 6	-0.0026	-1.44858	-0.04742	0.8844	0.0005	0
120	SLO 7	-0.0026	1.44858	-0.04742	-0.8844	0.0005	0
120	SLO 8	-0.0026	1.44858	-0.04742	-0.8844	0.0005	0
120	SLO 9	0.0026	-1.44858	-0.04742	0.8844	-0.0005	0
120	SLO 10	0.0026	-1.44858	-0.04742	0.8844	-0.0005	0
120	SLO 11	0.0026	1.44858	-0.04742	-0.8844	-0.0005	0
120	SLO 12	0.0026	1.44858	-0.04742	-0.8844	-0.0005	0
120	SLO 13	0.00866	-0.43457	-0.04742	0.2654	-0.0018	0
120	SLO 14	0.00866	-0.43457	-0.04742	0.2654	-0.0018	0
120	SLO 15	0.00866	0.43458	-0.04742	-0.2653	-0.0018	0
120	SLO 16	0.00866	0.43458	-0.04742	-0.2653	-0.0018	0
120	SLD 1	-0.00712	-0.40154	-0.04742	0.2452	0.0015	0
120	SLD 2	-0.00712	-0.40154	-0.04742	0.2452	0.0015	0
120	SLD 3	-0.00712	0.40154	-0.04742	-0.2451	0.0015	0
120	SLD 4	-0.00712	0.40154	-0.04742	-0.2451	0.0015	0
120	SLD 5	-0.00214	-1.33846	-0.04742	0.8172	0.0004	0
120	SLD 6	-0.00214	-1.33846	-0.04742	0.8172	0.0004	0
120	SLD 7	-0.00214	1.33847	-0.04742	-0.8171	0.0004	0
120	SLD 8	-0.00214	1.33847	-0.04742	-0.8171	0.0004	0
120	SLD 9	0.00214	-1.33846	-0.04742	0.8172	-0.0004	0
120	SLD 10	0.00214	-1.33846	-0.04742	0.8172	-0.0004	0
120	SLD 11	0.00214	1.33847	-0.04742	-0.8171	-0.0004	0
120	SLD 12	0.00214	1.33847	-0.04742	-0.8171	-0.0004	0
120	SLD 13	0.00712	-0.40154	-0.04742	0.2452	-0.0015	0
120	SLD 14	0.00712	-0.40154	-0.04742	0.2452	-0.0015	0
120	SLD 15	0.00712	0.40154	-0.04742	-0.2451	-0.0015	0
120	SLD 16	0.00712	0.40154	-0.04742	-0.2451	-0.0015	0
120	SLV 1	-0.01534	-1.05906	-0.04742	0.6466	0.0032	0
120	SLV 2	-0.01534	-1.05906	-0.04742	0.6466	0.0032	0
120	SLV 3	-0.01534	1.05907	-0.04742	-0.6466	0.0032	0
120	SLV 4	-0.01534	1.05907	-0.04742	-0.6466	0.0032	0
120	SLV 5	-0.0046	-3.53022	-0.04742	2.1553	0.001	0
120	SLV 6	-0.0046	-3.53022	-0.04742	2.1553	0.001	0
120	SLV 7	-0.0046	3.53022	-0.04742	-2.1553	0.001	0
120	SLV 8	-0.0046	3.53022	-0.04742	-2.1553	0.001	0
120	SLV 9	0.0046	-3.53022	-0.04742	2.1553	-0.001	0
120	SLV 10	0.0046	-3.53022	-0.04742	2.1553	-0.001	0
120	SLV 11	0.0046	3.53022	-0.04742	-2.1553	-0.001	0
120	SLV 12	0.0046	3.53022	-0.04742	-2.1553	-0.001	0
120	SLV 13	0.01534	-1.05906	-0.04742	0.6466	-0.0032	0
120	SLV 14	0.01534	-1.05906	-0.04742	0.6466	-0.0032	0
120	SLV 15	0.01534	1.05907	-0.04742	-0.6466	-0.0032	0
120	SLV 16	0.01534	1.05907	-0.04742	-0.6466	-0.0032	0
121	SLU 1	0	0	-0.37607	0	0	0
121	SLU 2	0	0	-0.3761	0	0	0
121	SLU 3	0	0.00002	-0.40215	0	0	0
121	SLU 4	0	0.00004	-0.44119	0	0	0
121	SLU 5	0	0.00004	-0.44122	0	0	0
121	SLU 6	0.00023	0	-0.42057	0	-0.0001	0
121	SLU 7	0.00023	0.00002	-0.44662	0	-0.0001	0
121	SLU 8	0.00023	0.00004	-0.48566	0	-0.0001	0
121	SLU 9	0.00023	0.00004	-0.48569	0	-0.0001	0
121	SLU 10	0.00047	0	-0.46501	0	-0.0002	0
121	SLU 11	0.00047	0	-0.46504	0	-0.0002	0
121	SLU 12	0.00047	0.00002	-0.49106	0	-0.0002	0
121	SLU 13	0.00047	0.00002	-0.49108	0	-0.0002	0
121	SLU 14	0.00039	-0.00016	-0.41343	0	-0.0002	0
121	SLU 15	0.00039	-0.00014	-0.43948	0	-0.0002	0
121	SLU 16	0.00039	-0.00012	-0.47852	0	-0.0002	0

Nodo	Cont.	Spostamento			Rotazione		
Ind.	N.br.	ux	uy	uz	rx	ry	rz
121	SLU 17	0.00039	-0.00012	-0.47854	0	-0.0002	0
121	SLU 18	0.00062	-0.00016	-0.4579	0	-0.0003	0
121	SLU 19	0.00062	-0.00014	-0.48395	0	-0.0003	0
121	SLU 20	0.00062	-0.00012	-0.52299	0	-0.0003	0
121	SLU 21	0.00062	-0.00012	-0.52301	0	-0.0003	0
121	SLU 22	0.00086	-0.00016	-0.50234	0	-0.0004	0
121	SLU 23	0.00086	-0.00016	-0.50236	0	-0.0004	0
121	SLU 24	0.00086	-0.00014	-0.52839	0	-0.0004	0
121	SLU 25	0.00086	-0.00014	-0.52841	0	-0.0004	0
121	SLU 26	0.00097	-0.0004	-0.46939	0.0001	-0.0004	0
121	SLU 27	0.00097	-0.0004	-0.46941	0.0001	-0.0004	0
121	SLU 28	0.00097	-0.00038	-0.49543	0.0001	-0.0004	0
121	SLU 29	0.00097	-0.00038	-0.49546	0.0001	-0.0004	0
121	SLU 30	0.00121	-0.0004	-0.51386	0.0001	-0.0006	0
121	SLU 31	0.00121	-0.0004	-0.51388	0.0001	-0.0006	0
121	SLU 32	0.00121	-0.00038	-0.5399	0.0001	-0.0006	0
121	SLU 33	0.00121	-0.00038	-0.53993	0.0001	-0.0006	0
121	SLU 34	0	0	-0.37607	0	0	0
121	SLU 35	0	0	-0.3761	0	0	0
121	SLU 36	0	0.00002	-0.40215	0	0	0
121	SLU 37	0	0.00004	-0.44119	0	0	0
121	SLU 38	0	0.00004	-0.44122	0	0	0
121	SLU 39	0.00023	0	-0.42057	0	-0.0001	0
121	SLU 40	0.00023	0.00002	-0.44662	0	-0.0001	0
121	SLU 41	0.00023	0.00004	-0.48566	0	-0.0001	0
121	SLU 42	0.00023	0.00004	-0.48569	0	-0.0001	0
121	SLU 43	0.00047	0	-0.46501	0	-0.0002	0
121	SLU 44	0.00047	0	-0.46504	0	-0.0002	0
121	SLU 45	0.00047	0.00002	-0.49106	0	-0.0002	0
121	SLU 46	0.00047	0.00002	-0.49108	0	-0.0002	0
121	SLU 47	0.00039	-0.00016	-0.41343	0	-0.0002	0
121	SLU 48	0.00039	-0.00014	-0.43948	0	-0.0002	0
121	SLU 49	0.00039	-0.00012	-0.47852	0	-0.0002	0
121	SLU 50	0.00039	-0.00012	-0.47854	0	-0.0002	0
121	SLU 51	0.00062	-0.00016	-0.4579	0	-0.0003	0
121	SLU 52	0.00062	-0.00014	-0.48395	0	-0.0003	0
121	SLU 53	0.00062	-0.00012	-0.52299	0	-0.0003	0
121	SLU 54	0.00062	-0.00012	-0.52301	0	-0.0003	0
121	SLU 55	0.00086	-0.00016	-0.50234	0	-0.0004	0
121	SLU 56	0.00086	-0.00016	-0.50236	0	-0.0004	0
121	SLU 57	0.00086	-0.00014	-0.52839	0	-0.0004	0
121	SLU 58	0.00086	-0.00014	-0.52841	0	-0.0004	0
121	SLU 59	0.00097	-0.0004	-0.46939	0.0001	-0.0004	0
121	SLU 60	0.00097	-0.0004	-0.46941	0.0001	-0.0004	0
121	SLU 61	0.00097	-0.00038	-0.49543	0.0001	-0.0004	0
121	SLU 62	0.00097	-0.00038	-0.49546	0.0001	-0.0004	0
121	SLU 63	0.00121	-0.0004	-0.51386	0.0001	-0.0006	0
121	SLU 64	0.00121	-0.0004	-0.51388	0.0001	-0.0006	0
121	SLU 65	0.00121	-0.00038	-0.5399	0.0001	-0.0006	0
121	SLU 66	0.00121	-0.00038	-0.53993	0.0001	-0.0006	0
121	SLU 67	0	0.00001	-0.48889	0	0	0
121	SLU 68	0	0	-0.48892	0	0	0
121	SLU 69	0	0.00002	-0.51497	0	0	0
121	SLU 70	0	0.00004	-0.55401	0	0	0
121	SLU 71	0	0.00004	-0.55404	-0.0001	0	0
121	SLU 72	0.00023	0	-0.53339	0	-0.0001	0
121	SLU 73	0.00023	0.00002	-0.55944	0	-0.0001	0
121	SLU 74	0.00023	0.00004	-0.59848	-0.0001	-0.0001	0
121	SLU 75	0.00023	0.00004	-0.59851	-0.0001	-0.0001	0
121	SLU 76	0.00047	0.00001	-0.57783	0	-0.0002	0
121	SLU 77	0.00047	0	-0.57786	0	-0.0002	0
121	SLU 78	0.00047	0.00002	-0.60388	0	-0.0002	0
121	SLU 79	0.00047	0.00002	-0.60391	0	-0.0002	0
121	SLU 80	0.00039	-0.00016	-0.52625	0	-0.0002	0
121	SLU 81	0.00039	-0.00014	-0.5523	0	-0.0002	0
121	SLU 82	0.00039	-0.00012	-0.59134	0	-0.0002	0
121	SLU 83	0.00039	-0.00012	-0.59136	0	-0.0002	0
121	SLU 84	0.00062	-0.00016	-0.57072	0	-0.0003	0
121	SLU 85	0.00062	-0.00014	-0.59677	0	-0.0003	0
121	SLU 86	0.00062	-0.00012	-0.63581	0	-0.0003	0
121	SLU 87	0.00062	-0.00012	-0.63583	0	-0.0003	0
121	SLU 88	0.00086	-0.00015	-0.61516	0	-0.0004	0
121	SLU 89	0.00086	-0.00016	-0.61518	0	-0.0004	0
121	SLU 90	0.00086	-0.00014	-0.64121	0	-0.0004	0
121	SLU 91	0.00086	-0.00014	-0.64123	0	-0.0004	0
121	SLU 92	0.00097	-0.0004	-0.58221	0.0001	-0.0004	0
121	SLU 93	0.00097	-0.0004	-0.58223	0.0001	-0.0004	0
121	SLU 94	0.00097	-0.00038	-0.60826	0.0001	-0.0004	0
121	SLU 95	0.00097	-0.00038	-0.60828	0.0001	-0.0004	0
121	SLU 96	0.00121	-0.00039	-0.62668	0.0001	-0.0006	0
121	SLU 97	0.00121	-0.0004	-0.6267	0.0001	-0.0006	0
121	SLU 98	0.00121	-0.00038	-0.65273	0.0001	-0.0006	0
121	SLU 99	0.00121	-0.00038	-0.65275	0.0001	-0.0006	0
121	SLU 100	0	0.00001	-0.48889	0	0	0
121	SLU 101	0	0	-0.48892	0	0	0
121	SLU 102	0	0.00002	-0.51497	0	0	0
121	SLU 103	0	0.00004	-0.55401	0	0	0
121	SLU 104	0	0.00004	-0.55404	-0.0001	0	0
121	SLU 105	0.00023	0	-0.53339	0	-0.0001	0
121	SLU 106	0.00023	0.00002	-0.55944	0	-0.0001	0
121	SLU 107	0.00023	0.00004	-0.59848	-0.0001	-0.0001	0
121	SLU 108	0.00023	0.00004	-0.59851	-0.0001	-0.0001	0
121	SLU 109	0.00047	0.00001	-0.57783	0	-0.0002	0
121	SLU 110	0.00047	0	-0.57786	0	-0.0002	0
121	SLU 111	0.00047	0.00002	-0.60388	0	-0.0002	0

Nodo	Cont.	Spostamento			Rotazione		
Ind.	N.br.	ux	uy	uz	rx	ry	rz
121	SLU 112	0.00047	0.00002	-0.60391	0	-0.0002	0
121	SLU 113	0.00039	-0.00016	-0.52625	0	-0.0002	0
121	SLU 114	0.00039	-0.00014	-0.5523	0	-0.0002	0
121	SLU 115	0.00039	-0.00012	-0.59134	0	-0.0002	0
121	SLU 116	0.00039	-0.00012	-0.59136	0	-0.0002	0
121	SLU 117	0.00062	-0.00016	-0.57072	0	-0.0003	0
121	SLU 118	0.00062	-0.00014	-0.59677	0	-0.0003	0
121	SLU 119	0.00062	-0.00012	-0.63581	0	-0.0003	0
121	SLU 120	0.00062	-0.00012	-0.63583	0	-0.0003	0
121	SLU 121	0.00086	-0.00015	-0.61516	0	-0.0004	0
121	SLU 122	0.00086	-0.00016	-0.61518	0	-0.0004	0
121	SLU 123	0.00086	-0.00014	-0.64121	0	-0.0004	0
121	SLU 124	0.00086	-0.00014	-0.64123	0	-0.0004	0
121	SLU 125	0.00097	-0.0004	-0.58221	0.0001	-0.0004	0
121	SLU 126	0.00097	-0.0004	-0.58223	0.0001	-0.0004	0
121	SLU 127	0.00097	-0.00038	-0.60826	0.0001	-0.0004	0
121	SLU 128	0.00097	-0.00038	-0.60828	0.0001	-0.0004	0
121	SLU 129	0.00121	-0.00039	-0.62668	0.0001	-0.0006	0
121	SLU 130	0.00121	-0.0004	-0.6267	0.0001	-0.0006	0
121	SLU 131	0.00121	-0.00038	-0.65273	0.0001	-0.0006	0
121	SLU 132	0.00121	-0.00038	-0.65275	0.0001	-0.0006	0
121	SLE RA 1	0	0	-0.37607	0	0	0
121	SLE RA 2	0	0	-0.37609	0	0	0
121	SLE RA 3	0	0.00001	-0.39346	0	0	0
121	SLE RA 4	0	0.00003	-0.41948	0	0	0
121	SLE RA 5	0	0.00003	-0.4195	0	0	0
121	SLE RA 6	0.00016	0	-0.40574	0	-0.0001	0
121	SLE RA 7	0.00016	0.00001	-0.4231	0	-0.0001	0
121	SLE RA 8	0.00016	0.00003	-0.44913	0	-0.0001	0
121	SLE RA 9	0.00016	0.00003	-0.44915	0	-0.0001	0
121	SLE RA 10	0.00031	0	-0.43537	0	-0.0001	0
121	SLE RA 11	0.00031	0	-0.43538	0	-0.0001	0
121	SLE RA 12	0.00031	0.00001	-0.45273	0	-0.0001	0
121	SLE RA 13	0.00031	0.00001	-0.45275	0	-0.0001	0
121	SLE RA 14	0.00026	-0.0001	-0.40098	0	-0.0001	0
121	SLE RA 15	0.00026	-0.00009	-0.41834	0	-0.0001	0
121	SLE RA 16	0.00026	-0.00008	-0.44437	0	-0.0001	0
121	SLE RA 17	0.00026	-0.00008	-0.44438	0	-0.0001	0
121	SLE RA 18	0.00042	-0.0001	-0.43062	0	-0.0002	0
121	SLE RA 19	0.00042	-0.00009	-0.44799	0	-0.0002	0
121	SLE RA 20	0.00042	-0.00008	-0.47402	0	-0.0002	0
121	SLE RA 21	0.00042	-0.00008	-0.47403	0	-0.0002	0
121	SLE RA 22	0.00057	-0.0001	-0.46025	0	-0.0003	0
121	SLE RA 23	0.00057	-0.0001	-0.46026	0	-0.0003	0
121	SLE RA 24	0.00057	-0.00009	-0.47761	0	-0.0003	0
121	SLE RA 25	0.00057	-0.00009	-0.47763	0	-0.0003	0
121	SLE RA 26	0.00065	-0.00026	-0.43828	0.0001	-0.0003	0
121	SLE RA 27	0.00065	-0.00026	-0.4383	0.0001	-0.0003	0
121	SLE RA 28	0.00065	-0.00025	-0.45565	0.0001	-0.0003	0
121	SLE RA 29	0.00065	-0.00025	-0.45566	0.0001	-0.0003	0
121	SLE RA 30	0.00081	-0.00026	-0.46793	0.0001	-0.0004	0
121	SLE RA 31	0.00081	-0.00026	-0.46794	0.0001	-0.0004	0
121	SLE RA 32	0.00081	-0.00025	-0.48529	0.0001	-0.0004	0
121	SLE RA 33	0.00081	-0.00025	-0.48531	0.0001	-0.0004	0
121	SLE FR 1	0	0	-0.37607	0	0	0
121	SLE FR 2	0	0	-0.37609	0	0	0
121	SLE FR 3	0	0.00001	-0.39344	0	0	0
121	SLE FR 4	0.00006	0	-0.38793	0	0	0
121	SLE FR 5	0.00026	-0.0001	-0.40095	0	-0.0001	0
121	SLE QP 1	0	0	-0.37607	0	0	0
121	SLO 1	-0.12993	-0.43482	-0.37607	0.3135	0.0449	0
121	SLO 2	-0.12993	-0.43482	-0.37607	0.3135	0.0449	0
121	SLO 3	-0.12993	0.43483	-0.37607	-0.3136	0.0449	0
121	SLO 4	-0.12993	0.43483	-0.37607	-0.3136	0.0449	0
121	SLO 5	-0.03898	-1.44941	-0.37607	1.0451	0.0135	0
121	SLO 6	-0.03898	-1.44941	-0.37607	1.0451	0.0135	0
121	SLO 7	-0.03898	1.44942	-0.37607	-1.0452	0.0135	0
121	SLO 8	-0.03898	1.44942	-0.37607	-1.0452	0.0135	0
121	SLO 9	0.03898	-1.44941	-0.37607	1.0451	-0.0135	0
121	SLO 10	0.03898	-1.44941	-0.37607	1.0451	-0.0135	0
121	SLO 11	0.03898	1.44942	-0.37607	-1.0452	-0.0135	0
121	SLO 12	0.03898	1.44942	-0.37607	-1.0452	-0.0135	0
121	SLO 13	0.12993	-0.43482	-0.37607	0.3135	-0.0449	0
121	SLO 14	0.12993	-0.43482	-0.37607	0.3135	-0.0449	0
121	SLO 15	0.12993	0.43483	-0.37607	-0.3136	-0.0449	0
121	SLO 16	0.12993	0.43483	-0.37607	-0.3136	-0.0449	0
121	SLD 1	-0.10661	-0.40177	-0.37607	0.2897	0.0368	0
121	SLD 2	-0.10661	-0.40177	-0.37607	0.2897	0.0368	0
121	SLD 3	-0.10661	0.40178	-0.37607	-0.2897	0.0368	0
121	SLD 4	-0.10661	0.40178	-0.37607	-0.2897	0.0368	0
121	SLD 5	-0.03198	-1.33924	-0.37607	0.9657	0.011	0
121	SLD 6	-0.03198	-1.33924	-0.37607	0.9657	0.011	0
121	SLD 7	-0.03198	1.33924	-0.37607	-0.9657	0.011	0
121	SLD 8	-0.03198	1.33924	-0.37607	-0.9657	0.011	0
121	SLD 9	0.03198	-1.33924	-0.37607	0.9657	-0.011	0
121	SLD 10	0.03198	-1.33924	-0.37607	0.9657	-0.011	0
121	SLD 11	0.03198	1.33924	-0.37607	-0.9657	-0.011	0
121	SLD 12	0.03198	1.33924	-0.37607	-0.9657	-0.011	0
121	SLD 13	0.10661	-0.40177	-0.37607	0.2897	-0.0368	0
121	SLD 14	0.10661	-0.40177	-0.37607	0.2897	-0.0368	0
121	SLD 15	0.10661	0.40178	-0.37607	-0.2897	-0.0368	0
121	SLD 16	0.10661	0.40178	-0.37607	-0.2897	-0.0368	0
121	SLV 1	-0.23817	-1.05967	-0.37607	0.7641	0.0823	0
121	SLV 2	-0.23817	-1.05967	-0.37607	0.7641	0.0823	0
121	SLV 3	-0.23817	1.05968	-0.37607	-0.7641	0.0823	0

Nodo	Cont.	Spostamento			Rotazione		
Ind.	N.br.	ux	uy	uz	rx	ry	rz
121	SLV 4	-0.23817	1.05968	-0.37607	-0.7641	0.0823	0
121	SLV 5	-0.07145	-3.53226	-0.37607	2.547	0.0247	0
121	SLV 6	-0.07145	-3.53226	-0.37607	2.547	0.0247	0
121	SLV 7	-0.07145	3.53227	-0.37607	-2.5471	0.0247	0
121	SLV 8	-0.07145	3.53227	-0.37607	-2.5471	0.0247	0
121	SLV 9	0.07145	-3.53226	-0.37607	2.547	-0.0247	0
121	SLV 10	0.07145	-3.53226	-0.37607	2.547	-0.0247	0
121	SLV 11	0.07145	3.53227	-0.37607	-2.5471	-0.0247	0
121	SLV 12	0.07145	3.53227	-0.37607	-2.5471	-0.0247	0
121	SLV 13	0.23817	-1.05967	-0.37607	0.7641	-0.0823	0
121	SLV 14	0.23817	-1.05967	-0.37607	0.7641	-0.0823	0
121	SLV 15	0.23817	1.05968	-0.37607	-0.7641	-0.0823	0
121	SLV 16	0.23817	1.05968	-0.37607	-0.7641	-0.0823	0
122	SLU 1	0	0.00001	-0.37611	0	0	0
122	SLU 2	0	0.00001	-0.37611	0	0	0
122	SLU 3	0	0.00002	-0.40216	0	0	0
122	SLU 4	0	0.00004	-0.44123	0	0	0
122	SLU 5	0	0.00004	-0.44123	0	0	0
122	SLU 6	0.00014	0.00001	-0.42057	0.0001	-0.0001	0
122	SLU 7	0.00014	0.00002	-0.44662	0	-0.0001	0
122	SLU 8	0.00014	0.00004	-0.48569	0	-0.0001	0
122	SLU 9	0.00014	0.00004	-0.48569	0	-0.0001	0
122	SLU 10	0.00027	0.00001	-0.46504	0.0001	-0.0002	0
122	SLU 11	0.00027	0.00001	-0.46504	0.0001	-0.0002	0
122	SLU 12	0.00027	0.00002	-0.49109	0	-0.0002	0
122	SLU 13	0.00027	0.00002	-0.49109	0	-0.0002	0
122	SLU 14	0.00023	-0.00015	-0.41342	0.0001	-0.0001	0
122	SLU 15	0.00023	-0.00014	-0.43947	0.0001	-0.0001	0
122	SLU 16	0.00023	-0.00012	-0.47854	0.0001	-0.0001	0
122	SLU 17	0.00023	-0.00012	-0.47854	0.0001	-0.0001	0
122	SLU 18	0.00037	-0.00015	-0.45789	0.0001	-0.0002	0
122	SLU 19	0.00037	-0.00014	-0.48394	0.0001	-0.0002	0
122	SLU 20	0.00037	-0.00012	-0.52301	0.0001	-0.0002	0
122	SLU 21	0.00037	-0.00012	-0.52301	0.0001	-0.0002	0
122	SLU 22	0.0005	-0.00015	-0.50235	0.0001	-0.0003	0
122	SLU 23	0.0005	-0.00015	-0.50235	0.0001	-0.0003	0
122	SLU 24	0.0005	-0.00014	-0.5284	0.0001	-0.0003	0
122	SLU 25	0.0005	-0.00014	-0.5284	0.0001	-0.0003	0
122	SLU 26	0.00057	-0.00039	-0.46939	0.0002	-0.0003	0
122	SLU 27	0.00057	-0.00039	-0.46939	0.0002	-0.0003	0
122	SLU 28	0.00057	-0.00038	-0.49544	0.0002	-0.0003	0
122	SLU 29	0.00057	-0.00038	-0.49544	0.0002	-0.0003	0
122	SLU 30	0.00071	-0.00039	-0.51386	0.0002	-0.0004	0
122	SLU 31	0.00071	-0.00039	-0.51386	0.0002	-0.0004	0
122	SLU 32	0.00071	-0.00038	-0.53991	0.0002	-0.0004	0
122	SLU 33	0.00071	-0.00038	-0.53991	0.0002	-0.0004	0
122	SLU 34	0	0.00001	-0.37611	0	0	0
122	SLU 35	0	0.00001	-0.37611	0	0	0
122	SLU 36	0	0.00002	-0.40216	0	0	0
122	SLU 37	0	0.00004	-0.44123	0	0	0
122	SLU 38	0	0.00004	-0.44123	0	0	0
122	SLU 39	0.00014	0.00001	-0.42057	0.0001	-0.0001	0
122	SLU 40	0.00014	0.00002	-0.44662	0	-0.0001	0
122	SLU 41	0.00014	0.00004	-0.48569	0	-0.0001	0
122	SLU 42	0.00014	0.00004	-0.48569	0	-0.0001	0
122	SLU 43	0.00027	0.00001	-0.46504	0.0001	-0.0002	0
122	SLU 44	0.00027	0.00001	-0.46504	0.0001	-0.0002	0
122	SLU 45	0.00027	0.00002	-0.49109	0	-0.0002	0
122	SLU 46	0.00027	0.00002	-0.49109	0	-0.0002	0
122	SLU 47	0.00023	-0.00015	-0.41342	0.0001	-0.0001	0
122	SLU 48	0.00023	-0.00014	-0.43947	0.0001	-0.0001	0
122	SLU 49	0.00023	-0.00012	-0.47854	0.0001	-0.0001	0
122	SLU 50	0.00023	-0.00012	-0.47854	0.0001	-0.0001	0
122	SLU 51	0.00037	-0.00015	-0.45789	0.0001	-0.0002	0
122	SLU 52	0.00037	-0.00014	-0.48394	0.0001	-0.0002	0
122	SLU 53	0.00037	-0.00012	-0.52301	0.0001	-0.0002	0
122	SLU 54	0.00037	-0.00012	-0.52301	0.0001	-0.0002	0
122	SLU 55	0.0005	-0.00015	-0.50235	0.0001	-0.0003	0
122	SLU 56	0.0005	-0.00015	-0.50235	0.0001	-0.0003	0
122	SLU 57	0.0005	-0.00014	-0.5284	0.0001	-0.0003	0
122	SLU 58	0.0005	-0.00014	-0.5284	0.0001	-0.0003	0
122	SLU 59	0.00057	-0.00039	-0.46939	0.0002	-0.0003	0
122	SLU 60	0.00057	-0.00039	-0.46939	0.0002	-0.0003	0
122	SLU 61	0.00057	-0.00038	-0.49544	0.0002	-0.0003	0
122	SLU 62	0.00057	-0.00038	-0.49544	0.0002	-0.0003	0
122	SLU 63	0.00071	-0.00039	-0.51386	0.0002	-0.0004	0
122	SLU 64	0.00071	-0.00039	-0.51386	0.0002	-0.0004	0
122	SLU 65	0.00071	-0.00038	-0.53991	0.0002	-0.0004	0
122	SLU 66	0.00071	-0.00038	-0.53991	0.0002	-0.0004	0
122	SLU 67	0	0.00001	-0.48894	0.0001	0	0
122	SLU 68	0	0.00001	-0.48894	0.0001	0	0
122	SLU 69	0	0.00002	-0.51499	0.0001	0	0
122	SLU 70	0	0.00004	-0.55406	0.0001	0	0
122	SLU 71	0	0.00004	-0.55406	0.0001	0	0
122	SLU 72	0.00014	0.00001	-0.5334	0.0001	-0.0001	0
122	SLU 73	0.00014	0.00002	-0.55945	0.0001	-0.0001	0
122	SLU 74	0.00014	0.00004	-0.59853	0.0001	-0.0001	0
122	SLU 75	0.00014	0.00004	-0.59853	0.0001	-0.0001	0
122	SLU 76	0.00027	0.00001	-0.57787	0.0001	-0.0002	0
122	SLU 77	0.00027	0.00001	-0.57787	0.0001	-0.0002	0
122	SLU 78	0.00027	0.00002	-0.60392	0.0001	-0.0002	0
122	SLU 79	0.00027	0.00002	-0.60392	0.0001	-0.0002	0
122	SLU 80	0.00023	-0.00015	-0.52625	0.0001	-0.0001	0
122	SLU 81	0.00023	-0.00014	-0.5523	0.0001	-0.0001	0
122	SLU 82	0.00023	-0.00012	-0.59138	0.0001	-0.0001	0

Nodo	Cont.	Spostamento			Rotazione		
Ind.	N.br.	ux	uy	uz	rx	ry	rz
122	SLU 83	0.00023	-0.00012	-0.59138	0.0001	-0.0001	0
122	SLU 84	0.00037	-0.00015	-0.57072	0.0001	-0.0002	0
122	SLU 85	0.00037	-0.00014	-0.59677	0.0001	-0.0002	0
122	SLU 86	0.00037	-0.00012	-0.63584	0.0001	-0.0002	0
122	SLU 87	0.00037	-0.00012	-0.63584	0.0001	-0.0002	0
122	SLU 88	0.0005	-0.00015	-0.61518	0.0001	-0.0003	0
122	SLU 89	0.0005	-0.00015	-0.61518	0.0001	-0.0003	0
122	SLU 90	0.0005	-0.00014	-0.64123	0.0001	-0.0003	0
122	SLU 91	0.0005	-0.00014	-0.64123	0.0001	-0.0003	0
122	SLU 92	0.00057	-0.00039	-0.58223	0.0002	-0.0003	0
122	SLU 93	0.00057	-0.00039	-0.58223	0.0002	-0.0003	0
122	SLU 94	0.00057	-0.00038	-0.60828	0.0002	-0.0003	0
122	SLU 95	0.00057	-0.00038	-0.60828	0.0002	-0.0003	0
122	SLU 96	0.00071	-0.00039	-0.62669	0.0002	-0.0004	0
122	SLU 97	0.00071	-0.00039	-0.62669	0.0002	-0.0004	0
122	SLU 98	0.00071	-0.00038	-0.65274	0.0002	-0.0004	0
122	SLU 99	0.00071	-0.00038	-0.65274	0.0002	-0.0004	0
122	SLU 100	0	0.00001	-0.48894	0.0001	0	0
122	SLU 101	0	0.00001	-0.48894	0.0001	0	0
122	SLU 102	0	0.00002	-0.51499	0.0001	0	0
122	SLU 103	0	0.00004	-0.55406	0.0001	0	0
122	SLU 104	0	0.00004	-0.55406	0.0001	0	0
122	SLU 105	0.00014	0.00001	-0.5334	0.0001	-0.0001	0
122	SLU 106	0.00014	0.00002	-0.55945	0.0001	-0.0001	0
122	SLU 107	0.00014	0.00004	-0.59853	0.0001	-0.0001	0
122	SLU 108	0.00014	0.00004	-0.59853	0.0001	-0.0001	0
122	SLU 109	0.00027	0.00001	-0.57787	0.0001	-0.0002	0
122	SLU 110	0.00027	0.00001	-0.57787	0.0001	-0.0002	0
122	SLU 111	0.00027	0.00002	-0.60392	0.0001	-0.0002	0
122	SLU 112	0.00027	0.00002	-0.60392	0.0001	-0.0002	0
122	SLU 113	0.00023	-0.00015	-0.52625	0.0001	-0.0001	0
122	SLU 114	0.00023	-0.00014	-0.5523	0.0001	-0.0001	0
122	SLU 115	0.00023	-0.00012	-0.59138	0.0001	-0.0001	0
122	SLU 116	0.00023	-0.00012	-0.59138	0.0001	-0.0001	0
122	SLU 117	0.00037	-0.00015	-0.57072	0.0001	-0.0002	0
122	SLU 118	0.00037	-0.00014	-0.59677	0.0001	-0.0002	0
122	SLU 119	0.00037	-0.00012	-0.63584	0.0001	-0.0002	0
122	SLU 120	0.00037	-0.00012	-0.63584	0.0001	-0.0002	0
122	SLU 121	0.0005	-0.00015	-0.61518	0.0001	-0.0003	0
122	SLU 122	0.0005	-0.00015	-0.61518	0.0001	-0.0003	0
122	SLU 123	0.0005	-0.00014	-0.64123	0.0001	-0.0003	0
122	SLU 124	0.0005	-0.00014	-0.64123	0.0001	-0.0003	0
122	SLU 125	0.00057	-0.00039	-0.58223	0.0002	-0.0003	0
122	SLU 126	0.00057	-0.00039	-0.58223	0.0002	-0.0003	0
122	SLU 127	0.00057	-0.00038	-0.60828	0.0002	-0.0003	0
122	SLU 128	0.00057	-0.00038	-0.60828	0.0002	-0.0003	0
122	SLU 129	0.00071	-0.00039	-0.62669	0.0002	-0.0004	0
122	SLU 130	0.00071	-0.00039	-0.62669	0.0002	-0.0004	0
122	SLU 131	0.00071	-0.00038	-0.65274	0.0002	-0.0004	0
122	SLU 132	0.00071	-0.00038	-0.65274	0.0002	-0.0004	0
122	SLE RA 1	0	0.00001	-0.37611	0	0	0
122	SLE RA 2	0	0.00001	-0.37611	0	0	0
122	SLE RA 3	0	0.00001	-0.39347	0	0	0
122	SLE RA 4	0	0.00003	-0.41952	0	0	0
122	SLE RA 5	0	0.00003	-0.41952	0	0	0
122	SLE RA 6	0.00009	0.00001	-0.40575	0.0001	-0.0001	0
122	SLE RA 7	0.00009	0.00001	-0.42312	0	-0.0001	0
122	SLE RA 8	0.00009	0.00003	-0.44916	0	-0.0001	0
122	SLE RA 9	0.00009	0.00003	-0.44916	0	-0.0001	0
122	SLE RA 10	0.00018	0.00001	-0.43539	0.0001	-0.0001	0
122	SLE RA 11	0.00018	0.00001	-0.43539	0.0001	-0.0001	0
122	SLE RA 12	0.00018	0.00002	-0.45276	0	-0.0001	0
122	SLE RA 13	0.00018	0.00001	-0.45276	0	-0.0001	0
122	SLE RA 14	0.00015	-0.0001	-0.40098	0.0001	-0.0001	0
122	SLE RA 15	0.00015	-0.00009	-0.41835	0.0001	-0.0001	0
122	SLE RA 16	0.00015	-0.00008	-0.4444	0.0001	-0.0001	0
122	SLE RA 17	0.00015	-0.00008	-0.4444	0.0001	-0.0001	0
122	SLE RA 18	0.00024	-0.0001	-0.43063	0.0001	-0.0001	0
122	SLE RA 19	0.00024	-0.00009	-0.44799	0.0001	-0.0001	0
122	SLE RA 20	0.00024	-0.00008	-0.47404	0.0001	-0.0001	0
122	SLE RA 21	0.00024	-0.00008	-0.47404	0.0001	-0.0001	0
122	SLE RA 22	0.00033	-0.0001	-0.46027	0.0001	-0.0002	0
122	SLE RA 23	0.00033	-0.0001	-0.46027	0.0001	-0.0002	0
122	SLE RA 24	0.00033	-0.00009	-0.47764	0.0001	-0.0002	0
122	SLE RA 25	0.00033	-0.00009	-0.47764	0.0001	-0.0002	0
122	SLE RA 26	0.00038	-0.00026	-0.4383	0.0002	-0.0002	0
122	SLE RA 27	0.00038	-0.00026	-0.4383	0.0002	-0.0002	0
122	SLE RA 28	0.00038	-0.00025	-0.45566	0.0002	-0.0002	0
122	SLE RA 29	0.00038	-0.00025	-0.45566	0.0002	-0.0002	0
122	SLE RA 30	0.00047	-0.00026	-0.46794	0.0002	-0.0003	0
122	SLE RA 31	0.00047	-0.00026	-0.46794	0.0002	-0.0003	0
122	SLE RA 32	0.00047	-0.00025	-0.48531	0.0002	-0.0003	0
122	SLE RA 33	0.00047	-0.00025	-0.48531	0.0002	-0.0003	0
122	SLE FR 1	0	0.00001	-0.37611	0	0	0
122	SLE FR 2	0	0.00001	-0.37611	0	0	0
122	SLE FR 3	0	0.00002	-0.39347	0	0	0
122	SLE FR 4	0.00004	0.00001	-0.38796	0	0	0
122	SLE FR 5	0.00015	-0.0001	-0.40098	0.0001	-0.0001	0
122	SLE QP 1	0	0.00001	-0.37611	0	0	0
122	SLO 1	-0.13006	-0.43499	-0.37611	0.3141	0.0449	0
122	SLO 2	-0.13006	-0.43499	-0.37611	0.3141	0.0449	0
122	SLO 3	-0.13006	0.435	-0.37611	-0.314	0.0449	0
122	SLO 4	-0.13006	0.435	-0.37611	-0.314	0.0449	0
122	SLO 5	-0.03902	-1.44997	-0.37611	1.0469	0.0135	0
122	SLO 6	-0.03902	-1.44997	-0.37611	1.0469	0.0135	0

Nodo	Cont.	Spostamento			Rotazione		
Ind.	N.br.	ux	uy	uz	rx	ry	rz
122	SLO 7	-0.03902	1.44998	-0.37611	-1.0468	0.0135	0
122	SLO 8	-0.03902	1.44998	-0.37611	-1.0468	0.0135	0
122	SLO 9	0.03902	-1.44997	-0.37611	1.0469	-0.0135	0
122	SLO 10	0.03902	-1.44997	-0.37611	1.0469	-0.0135	0
122	SLO 11	0.03902	1.44998	-0.37611	-1.0468	-0.0135	0
122	SLO 12	0.03902	1.44998	-0.37611	-1.0468	-0.0135	0
122	SLO 13	0.13006	-0.43499	-0.37611	0.3141	-0.0449	0
122	SLO 14	0.13006	-0.43499	-0.37611	0.3141	-0.0449	0
122	SLO 15	0.13006	0.435	-0.37611	-0.314	-0.0449	0
122	SLO 16	0.13006	0.435	-0.37611	-0.314	-0.0449	0
122	SLD 1	-0.10672	-0.40192	-0.37611	0.2902	0.0369	0
122	SLD 2	-0.10672	-0.40192	-0.37611	0.2902	0.0369	0
122	SLD 3	-0.10672	0.40193	-0.37611	-0.2901	0.0369	0
122	SLD 4	-0.10672	0.40193	-0.37611	-0.2901	0.0369	0
122	SLD 5	-0.03201	-1.33975	-0.37611	0.9674	0.0111	0
122	SLD 6	-0.03201	-1.33975	-0.37611	0.9674	0.0111	0
122	SLD 7	-0.03201	1.33976	-0.37611	-0.9673	0.0111	0
122	SLD 8	-0.03201	1.33976	-0.37611	-0.9673	0.0111	0
122	SLD 9	0.03201	-1.33975	-0.37611	0.9674	-0.0111	0
122	SLD 10	0.03201	-1.33975	-0.37611	0.9674	-0.0111	0
122	SLD 11	0.03201	1.33976	-0.37611	-0.9673	-0.0111	0
122	SLD 12	0.03201	1.33976	-0.37611	-0.9673	-0.0111	0
122	SLD 13	0.10672	-0.40192	-0.37611	0.2902	-0.0369	0
122	SLD 14	0.10672	-0.40192	-0.37611	0.2902	-0.0369	0
122	SLD 15	0.10672	0.40193	-0.37611	-0.2901	-0.0369	0
122	SLD 16	0.10672	0.40193	-0.37611	-0.2901	-0.0369	0
122	SLV 1	-0.2384	-1.06008	-0.37611	0.7654	0.0824	0
122	SLV 2	-0.2384	-1.06008	-0.37611	0.7654	0.0824	0
122	SLV 3	-0.2384	1.06009	-0.37611	-0.7653	0.0824	0
122	SLV 4	-0.2384	1.06009	-0.37611	-0.7653	0.0824	0
122	SLV 5	-0.07152	-3.53361	-0.37611	2.5513	0.0247	0
122	SLV 6	-0.07152	-3.53361	-0.37611	2.5513	0.0247	0
122	SLV 7	-0.07152	3.53363	-0.37611	-2.5512	0.0247	0
122	SLV 8	-0.07152	3.53363	-0.37611	-2.5512	0.0247	0
122	SLV 9	0.07152	-3.53361	-0.37611	2.5513	-0.0247	0
122	SLV 10	0.07152	-3.53361	-0.37611	2.5513	-0.0247	0
122	SLV 11	0.07152	3.53363	-0.37611	-2.5512	-0.0247	0
122	SLV 12	0.07152	3.53363	-0.37611	-2.5512	-0.0247	0
122	SLV 13	0.2384	-1.06008	-0.37611	0.7654	-0.0824	0
122	SLV 14	0.2384	-1.06008	-0.37611	0.7654	-0.0824	0
122	SLV 15	0.2384	1.06009	-0.37611	-0.7653	-0.0824	0
122	SLV 16	0.2384	1.06009	-0.37611	-0.7653	-0.0824	0
123	SLU 1	0	0.00001	-0.37671	0.0003	0	0
123	SLU 2	0	0.00001	-0.37671	0.0003	0	0
123	SLU 3	0	0.00002	-0.38978	0.0003	0	0
123	SLU 4	0	0.00004	-0.40937	0.0003	0	0
123	SLU 5	0	0.00004	-0.40937	0.0003	0	0
123	SLU 6	0.00011	0.00001	-0.39905	0.0003	0	0
123	SLU 7	0.00011	0.00002	-0.41211	0.0003	0	0
123	SLU 8	0.00011	0.00004	-0.43171	0.0003	0	0
123	SLU 9	0.00011	0.00004	-0.43171	0.0003	0	0
123	SLU 10	0.00022	0.00001	-0.42139	0.0004	-0.0001	0
123	SLU 11	0.00022	0.00001	-0.42139	0.0004	-0.0001	0
123	SLU 12	0.00022	0.00002	-0.43445	0.0004	-0.0001	0
123	SLU 13	0.00022	0.00002	-0.43445	0.0004	-0.0001	0
123	SLU 14	0.00018	-0.00015	-0.39549	0.0004	-0.0001	0
123	SLU 15	0.00018	-0.00014	-0.40855	0.0004	-0.0001	0
123	SLU 16	0.00018	-0.00012	-0.42815	0.0004	-0.0001	0
123	SLU 17	0.00018	-0.00012	-0.42815	0.0004	-0.0001	0
123	SLU 18	0.00029	-0.00015	-0.41782	0.0004	-0.0001	0
123	SLU 19	0.00029	-0.00014	-0.43089	0.0004	-0.0001	0
123	SLU 20	0.00029	-0.00012	-0.45049	0.0004	-0.0001	0
123	SLU 21	0.00029	-0.00012	-0.45049	0.0004	-0.0001	0
123	SLU 22	0.0004	-0.00015	-0.44016	0.0004	-0.0002	0
123	SLU 23	0.0004	-0.00015	-0.44016	0.0004	-0.0002	0
123	SLU 24	0.0004	-0.00014	-0.45323	0.0004	-0.0002	0
123	SLU 25	0.0004	-0.00014	-0.45323	0.0004	-0.0002	0
123	SLU 26	0.00046	-0.00039	-0.42365	0.0005	-0.0002	0
123	SLU 27	0.00046	-0.00039	-0.42365	0.0005	-0.0002	0
123	SLU 28	0.00046	-0.00038	-0.43672	0.0005	-0.0002	0
123	SLU 29	0.00046	-0.00038	-0.43672	0.0005	-0.0002	0
123	SLU 30	0.00057	-0.00039	-0.44599	0.0005	-0.0003	0
123	SLU 31	0.00057	-0.00039	-0.44599	0.0005	-0.0003	0
123	SLU 32	0.00057	-0.00038	-0.45905	0.0005	-0.0003	0
123	SLU 33	0.00057	-0.00038	-0.45905	0.0005	-0.0003	0
123	SLU 34	0	0.00001	-0.37671	0.0003	0	0
123	SLU 35	0	0.00001	-0.37671	0.0003	0	0
123	SLU 36	0	0.00002	-0.38978	0.0003	0	0
123	SLU 37	0	0.00004	-0.40937	0.0003	0	0
123	SLU 38	0	0.00004	-0.40937	0.0003	0	0
123	SLU 39	0.00011	0.00001	-0.39905	0.0003	0	0
123	SLU 40	0.00011	0.00002	-0.41211	0.0003	0	0
123	SLU 41	0.00011	0.00004	-0.43171	0.0003	0	0
123	SLU 42	0.00011	0.00004	-0.43171	0.0003	0	0
123	SLU 43	0.00022	0.00001	-0.42139	0.0004	-0.0001	0
123	SLU 44	0.00022	0.00001	-0.42139	0.0004	-0.0001	0
123	SLU 45	0.00022	0.00002	-0.43445	0.0004	-0.0001	0
123	SLU 46	0.00022	0.00002	-0.43445	0.0004	-0.0001	0
123	SLU 47	0.00018	-0.00015	-0.39549	0.0004	-0.0001	0
123	SLU 48	0.00018	-0.00014	-0.40855	0.0004	-0.0001	0
123	SLU 49	0.00018	-0.00012	-0.42815	0.0004	-0.0001	0
123	SLU 50	0.00018	-0.00012	-0.42815	0.0004	-0.0001	0
123	SLU 51	0.00029	-0.00015	-0.41782	0.0004	-0.0001	0
123	SLU 52	0.00029	-0.00014	-0.43089	0.0004	-0.0001	0
123	SLU 53	0.00029	-0.00012	-0.45049	0.0004	-0.0001	0

Nodo	Cont.	Spostamento			Rotazione		
Ind.	N.br.	ux	uy	uz	rx	ry	rz
123	SLU 54	0.00029	-0.00012	-0.45049	0.0004	-0.0001	0
123	SLU 55	0.0004	-0.00015	-0.44016	0.0004	-0.0002	0
123	SLU 56	0.0004	-0.00015	-0.44016	0.0004	-0.0002	0
123	SLU 57	0.0004	-0.00014	-0.45323	0.0004	-0.0002	0
123	SLU 58	0.0004	-0.00014	-0.45323	0.0004	-0.0002	0
123	SLU 59	0.00046	-0.00039	-0.42365	0.0005	-0.0002	0
123	SLU 60	0.00046	-0.00039	-0.42365	0.0005	-0.0002	0
123	SLU 61	0.00046	-0.00038	-0.43672	0.0005	-0.0002	0
123	SLU 62	0.00046	-0.00038	-0.43672	0.0005	-0.0002	0
123	SLU 63	0.00057	-0.00039	-0.44599	0.0005	-0.0003	0
123	SLU 64	0.00057	-0.00039	-0.44599	0.0005	-0.0003	0
123	SLU 65	0.00057	-0.00038	-0.45905	0.0005	-0.0003	0
123	SLU 66	0.00057	-0.00038	-0.45905	0.0005	-0.0003	0
123	SLU 67	0	0.00001	-0.48972	0.0004	0	0
123	SLU 68	0	0.00001	-0.48972	0.0004	0	0
123	SLU 69	0	0.00002	-0.50279	0.0004	0	0
123	SLU 70	0	0.00004	-0.52239	0.0004	0	0
123	SLU 71	0	0.00004	-0.52239	0.0004	0	0
123	SLU 72	0.00011	0.00001	-0.51206	0.0004	0	0
123	SLU 73	0.00011	0.00002	-0.52513	0.0004	0	0
123	SLU 74	0.00011	0.00004	-0.54473	0.0004	0	0
123	SLU 75	0.00011	0.00004	-0.54473	0.0004	0	0
123	SLU 76	0.00022	0.00001	-0.5344	0.0005	-0.0001	0
123	SLU 77	0.00022	0.00001	-0.5344	0.0005	-0.0001	0
123	SLU 78	0.00022	0.00002	-0.54747	0.0005	-0.0001	0
123	SLU 79	0.00022	0.00002	-0.54747	0.0005	-0.0001	0
123	SLU 80	0.00018	-0.00015	-0.5085	0.0005	-0.0001	0
123	SLU 81	0.00018	-0.00014	-0.52156	0.0005	-0.0001	0
123	SLU 82	0.00018	-0.00012	-0.54116	0.0005	-0.0001	0
123	SLU 83	0.00018	-0.00012	-0.54116	0.0005	-0.0001	0
123	SLU 84	0.00029	-0.00015	-0.53084	0.0005	-0.0001	0
123	SLU 85	0.00029	-0.00014	-0.5439	0.0005	-0.0001	0
123	SLU 86	0.00029	-0.00012	-0.5635	0.0005	-0.0001	0
123	SLU 87	0.00029	-0.00012	-0.5635	0.0005	-0.0001	0
123	SLU 88	0.0004	-0.00015	-0.55318	0.0005	-0.0002	0
123	SLU 89	0.0004	-0.00015	-0.55318	0.0005	-0.0002	0
123	SLU 90	0.0004	-0.00014	-0.56624	0.0005	-0.0002	0
123	SLU 91	0.0004	-0.00014	-0.56624	0.0005	-0.0002	0
123	SLU 92	0.00046	-0.00039	-0.53666	0.0006	-0.0002	0
123	SLU 93	0.00046	-0.00039	-0.53666	0.0006	-0.0002	0
123	SLU 94	0.00046	-0.00038	-0.54973	0.0006	-0.0002	0
123	SLU 95	0.00046	-0.00038	-0.54973	0.0006	-0.0002	0
123	SLU 96	0.00057	-0.00039	-0.559	0.0006	-0.0003	0
123	SLU 97	0.00057	-0.00039	-0.559	0.0006	-0.0003	0
123	SLU 98	0.00057	-0.00038	-0.57207	0.0006	-0.0003	0
123	SLU 99	0.00057	-0.00038	-0.57207	0.0006	-0.0003	0
123	SLU 100	0	0.00001	-0.48972	0.0004	0	0
123	SLU 101	0	0.00001	-0.48972	0.0004	0	0
123	SLU 102	0	0.00002	-0.50279	0.0004	0	0
123	SLU 103	0	0.00004	-0.52239	0.0004	0	0
123	SLU 104	0	0.00004	-0.52239	0.0004	0	0
123	SLU 105	0.00011	0.00001	-0.51206	0.0004	0	0
123	SLU 106	0.00011	0.00002	-0.52513	0.0004	0	0
123	SLU 107	0.00011	0.00004	-0.54473	0.0004	0	0
123	SLU 108	0.00011	0.00004	-0.54473	0.0004	0	0
123	SLU 109	0.00022	0.00001	-0.5344	0.0005	-0.0001	0
123	SLU 110	0.00022	0.00001	-0.5344	0.0005	-0.0001	0
123	SLU 111	0.00022	0.00002	-0.54747	0.0005	-0.0001	0
123	SLU 112	0.00022	0.00002	-0.54747	0.0005	-0.0001	0
123	SLU 113	0.00018	-0.00015	-0.5085	0.0005	-0.0001	0
123	SLU 114	0.00018	-0.00014	-0.52156	0.0005	-0.0001	0
123	SLU 115	0.00018	-0.00012	-0.54116	0.0005	-0.0001	0
123	SLU 116	0.00018	-0.00012	-0.54116	0.0005	-0.0001	0
123	SLU 117	0.00029	-0.00015	-0.53084	0.0005	-0.0001	0
123	SLU 118	0.00029	-0.00014	-0.5439	0.0005	-0.0001	0
123	SLU 119	0.00029	-0.00012	-0.5635	0.0005	-0.0001	0
123	SLU 120	0.00029	-0.00012	-0.5635	0.0005	-0.0001	0
123	SLU 121	0.0004	-0.00015	-0.55318	0.0005	-0.0002	0
123	SLU 122	0.0004	-0.00015	-0.55318	0.0005	-0.0002	0
123	SLU 123	0.0004	-0.00014	-0.56624	0.0005	-0.0002	0
123	SLU 124	0.0004	-0.00014	-0.56624	0.0005	-0.0002	0
123	SLU 125	0.00046	-0.00039	-0.53666	0.0006	-0.0002	0
123	SLU 126	0.00046	-0.00039	-0.53666	0.0006	-0.0002	0
123	SLU 127	0.00046	-0.00038	-0.54973	0.0006	-0.0002	0
123	SLU 128	0.00046	-0.00038	-0.54973	0.0006	-0.0002	0
123	SLU 129	0.00057	-0.00039	-0.559	0.0006	-0.0003	0
123	SLU 130	0.00057	-0.00039	-0.559	0.0006	-0.0003	0
123	SLU 131	0.00057	-0.00038	-0.57207	0.0006	-0.0003	0
123	SLU 132	0.00057	-0.00038	-0.57207	0.0006	-0.0003	0
123	SLE RA 1	0	0.00001	-0.37671	0.0003	0	0
123	SLE RA 2	0	0.00001	-0.37671	0.0003	0	0
123	SLE RA 3	0	0.00002	-0.38542	0.0003	0	0
123	SLE RA 4	0	0.00003	-0.39849	0.0003	0	0
123	SLE RA 5	0	0.00003	-0.39849	0.0003	0	0
123	SLE RA 6	0.00007	0.00001	-0.3916	0.0003	0	0
123	SLE RA 7	0.00007	0.00002	-0.40031	0.0003	0	0
123	SLE RA 8	0.00007	0.00003	-0.41338	0.0003	0	0
123	SLE RA 9	0.00007	0.00003	-0.41338	0.0003	0	0
123	SLE RA 10	0.00015	0.00001	-0.40649	0.0003	-0.0001	0
123	SLE RA 11	0.00015	0.00001	-0.40649	0.0003	-0.0001	0
123	SLE RA 12	0.00015	0.00002	-0.4152	0.0003	-0.0001	0
123	SLE RA 13	0.00015	0.00002	-0.4152	0.0003	-0.0001	0
123	SLE RA 14	0.00012	-0.0001	-0.38923	0.0004	-0.0001	0
123	SLE RA 15	0.00012	-0.00009	-0.39794	0.0004	-0.0001	0
123	SLE RA 16	0.00012	-0.00008	-0.411	0.0004	-0.0001	0

Nodo	Cont.	Spostamento			Rotazione		
Ind.	N.br.	ux	uy	uz	rx	ry	rz
123	SLE RA 17	0.00012	-0.00008	-0.411	0.0004	-0.0001	0
123	SLE RA 18	0.0002	-0.0001	-0.40412	0.0004	-0.0001	0
123	SLE RA 19	0.0002	-0.00009	-0.41283	0.0004	-0.0001	0
123	SLE RA 20	0.0002	-0.00008	-0.4259	0.0004	-0.0001	0
123	SLE RA 21	0.0002	-0.00008	-0.4259	0.0004	-0.0001	0
123	SLE RA 22	0.00027	-0.0001	-0.41901	0.0004	-0.0001	0
123	SLE RA 23	0.00027	-0.0001	-0.41901	0.0004	-0.0001	0
123	SLE RA 24	0.00027	-0.00009	-0.42772	0.0004	-0.0001	0
123	SLE RA 25	0.00027	-0.00009	-0.42772	0.0004	-0.0001	0
123	SLE RA 26	0.00031	-0.00026	-0.408	0.0005	-0.0001	0
123	SLE RA 27	0.00031	-0.00026	-0.408	0.0005	-0.0001	0
123	SLE RA 28	0.00031	-0.00025	-0.41671	0.0005	-0.0001	0
123	SLE RA 29	0.00031	-0.00025	-0.41671	0.0005	-0.0001	0
123	SLE RA 30	0.00038	-0.00026	-0.42289	0.0005	-0.0002	0
123	SLE RA 31	0.00038	-0.00026	-0.42289	0.0005	-0.0002	0
123	SLE RA 32	0.00038	-0.00025	-0.43161	0.0005	-0.0002	0
123	SLE RA 33	0.00038	-0.00025	-0.43161	0.0005	-0.0002	0
123	SLE FR 1	0	0.00001	-0.37671	0.0003	0	0
123	SLE FR 2	0	0.00001	-0.37671	0.0003	0	0
123	SLE FR 3	0	0.00002	-0.38542	0.0003	0	0
123	SLE FR 4	0.00003	0.00001	-0.38267	0.0003	0	0
123	SLE FR 5	0.00012	-0.0001	-0.38923	0.0004	-0.0001	0
123	SLE QP 1	0	0.00001	-0.37671	0.0003	0	0
123	SLO 1	-0.12771	-0.43507	-0.37666	0.3147	0.0441	0
123	SLO 2	-0.12771	-0.43507	-0.37666	0.3147	0.0441	0
123	SLO 3	-0.12771	0.43508	-0.37675	-0.314	0.0441	0
123	SLO 4	-0.12771	0.43508	-0.37675	-0.314	0.0441	0
123	SLO 5	-0.03831	-1.45024	-0.37656	1.0481	0.0132	0
123	SLO 6	-0.03831	-1.45024	-0.37656	1.0481	0.0132	0
123	SLO 7	-0.03831	1.45026	-0.37686	-1.0474	0.0132	0
123	SLO 8	-0.03831	1.45026	-0.37686	-1.0474	0.0132	0
123	SLO 9	0.03831	-1.45024	-0.37656	1.0481	-0.0132	0
123	SLO 10	0.03831	-1.45024	-0.37656	1.0481	-0.0132	0
123	SLO 11	0.03831	1.45026	-0.37686	-1.0474	-0.0132	0
123	SLO 12	0.03831	1.45026	-0.37686	-1.0474	-0.0132	0
123	SLO 13	0.12771	-0.43507	-0.37666	0.3147	-0.0441	0
123	SLO 14	0.12771	-0.43507	-0.37666	0.3147	-0.0441	0
123	SLO 15	0.12771	0.43508	-0.37675	-0.314	-0.0441	0
123	SLO 16	0.12771	0.43508	-0.37675	-0.314	-0.0441	0
123	SLD 1	-0.10479	-0.402	-0.37667	0.2908	0.0362	0
123	SLD 2	-0.10479	-0.402	-0.37667	0.2908	0.0362	0
123	SLD 3	-0.10479	0.40201	-0.37675	-0.2901	0.0362	0
123	SLD 4	-0.10479	0.40201	-0.37675	-0.2901	0.0362	0
123	SLD 5	-0.03144	-1.34	-0.37657	0.9684	0.0109	0
123	SLD 6	-0.03144	-1.34	-0.37657	0.9684	0.0109	0
123	SLD 7	-0.03144	1.34002	-0.37685	-0.9678	0.0109	0
123	SLD 8	-0.03144	1.34002	-0.37685	-0.9678	0.0109	0
123	SLD 9	0.03144	-1.34	-0.37657	0.9684	-0.0109	0
123	SLD 10	0.03144	-1.34	-0.37657	0.9684	-0.0109	0
123	SLD 11	0.03144	1.34002	-0.37685	-0.9678	-0.0109	0
123	SLD 12	0.03144	1.34002	-0.37685	-0.9678	-0.0109	0
123	SLD 13	0.10479	-0.402	-0.37667	0.2908	-0.0362	0
123	SLD 14	0.10479	-0.402	-0.37667	0.2908	-0.0362	0
123	SLD 15	0.10479	0.40201	-0.37675	-0.2901	-0.0362	0
123	SLD 16	0.10479	0.40201	-0.37675	-0.2901	-0.0362	0
123	SLV 1	-0.2341	-1.06028	-0.3766	0.7663	0.0809	0
123	SLV 2	-0.2341	-1.06028	-0.3766	0.7663	0.0809	0
123	SLV 3	-0.2341	1.0603	-0.37682	-0.7657	0.0809	0
123	SLV 4	-0.2341	1.0603	-0.37682	-0.7657	0.0809	0
123	SLV 5	-0.07023	-3.53429	-0.37635	2.5537	0.0243	0
123	SLV 6	-0.07023	-3.53429	-0.37635	2.5537	0.0243	0
123	SLV 7	-0.07023	3.5343	-0.37707	-2.553	0.0243	0
123	SLV 8	-0.07023	3.5343	-0.37707	-2.553	0.0243	0
123	SLV 9	0.07023	-3.53429	-0.37635	2.5537	-0.0243	0
123	SLV 10	0.07023	-3.53429	-0.37635	2.5537	-0.0243	0
123	SLV 11	0.07023	3.5343	-0.37707	-2.553	-0.0243	0
123	SLV 12	0.07023	3.5343	-0.37707	-2.553	-0.0243	0
123	SLV 13	0.2341	-1.06028	-0.3766	0.7663	-0.0809	0
123	SLV 14	0.2341	-1.06028	-0.3766	0.7663	-0.0809	0
123	SLV 15	0.2341	1.0603	-0.37682	-0.7657	-0.0809	0
123	SLV 16	0.2341	1.0603	-0.37682	-0.7657	-0.0809	0

8.2.4 Spostamenti nodali nei modi

***Nodo**: nodo interessato dallo spostamento.*
***Ind.**: indice del nodo.*
***Cont.**: condizione o combinazione di carico a cui si riferisce lo spostamento.*
***N.br.**: nome breve della condizione o combinazione di carico.*
***Spostamento**: spostamento traslazionale del nodo.*
***ux**: componente X dello spostamento del nodo. [cm]*
***uy**: componente Y dello spostamento del nodo. [cm]*
***uz**: componente Z dello spostamento del nodo. [cm]*
***Rotazione**: spostamento rotazionale del nodo.*
***rx**: componente X della rotazione del nodo. [deg]*
***ry**: componente Y della rotazione del nodo. [deg]*
***rz**: componente Z della rotazione del nodo. [deg]*

Nodo	Cont.	Spostamento			Rotazione		
Ind.	N.br.	ux	uy	uz	rx	ry	rz
2	MVBR 1	0	0	0	0.0207	0	0.0483
2	MVBR 2	0	0	0	0.0001	-0.0325	0.0003
2	MVBR 3	0	0	0	0.0002	-0.0046	0.0007
3	MVBR 1	0	0	0	0.0207	0	-0.0483
3	MVBR 2	0	0	0	-0.0001	-0.0325	0.0003
3	MVBR 3	0	0	0	-0.0002	-0.0046	0.0007
4	MVBR 1	0	0	0	0.0209	0	0.0489
4	MVBR 2	0	0	0	0	-0.0331	-0.0001
4	MVBR 3	0	0	0	0.0001	-0.0011	0.0003
5	MVBR 1	0	0	0	0.0209	0	-0.0489
5	MVBR 2	0	0	0	0	-0.0331	-0.0001
5	MVBR 3	0	0	0	-0.0001	-0.0011	0.0003
6	MVBR 1	0	0	0	0.0209	0	0.0489
6	MVBR 2	0	0	0	0.0016	-0.0331	0.0038
6	MVBR 3	0	0	0	-0.0015	-0.0013	-0.0035
7	MVBR 1	0	0	0	0.0209	0	-0.0489
7	MVBR 2	0	0	0	-0.0016	-0.0331	0.0038
7	MVBR 3	0	0	0	0.0015	-0.0013	-0.0035
8	MVBR 1	0	0	0	0.0204	0	0.0477
8	MVBR 2	0	0	0	0.0007	0	0.0017
8	MVBR 3	0	0	0	-0.0007	-0.0475	-0.0015
9	MVBR 1	0	0	0	0.0204	0	-0.0477
9	MVBR 2	0	0	0	-0.0007	0	0.0017
9	MVBR 3	0	0	0	0.0007	-0.0475	-0.0015
10	MVBR 1	0	0	0	0.0204	0	0.0477
10	MVBR 3	0	0	0	0	-0.0477	0
11	MVBR 1	0	0	0	0.0204	0	-0.0477
11	MVBR 3	0	0	0	0	-0.0477	0
12	MVBR 1	0	0	0	0.0204	0	0.0477
12	MVBR 3	0	0	0	0	-0.0477	0
13	MVBR 1	0	0	0	0.0204	0	-0.0477
13	MVBR 3	0	0	0	0	-0.0477	0
14	MVBR 1	0	0	0	0.0204	0	0.0477
14	MVBR 3	0	0	0	0	-0.0477	0
15	MVBR 1	0	0	0	0.0204	0	-0.0477
15	MVBR 3	0	0	0	0	-0.0477	0
16	MVBR 1	0	0	0	0.0204	0	0.0477
16	MVBR 2	0	0	0	-0.0007	0	-0.0017
16	MVBR 3	0	0	0	0.0007	-0.0475	0.0015
17	MVBR 1	0	0	0	0.0204	0	-0.0477
17	MVBR 2	0	0	0	0.0007	0	-0.0017
17	MVBR 3	0	0	0	-0.0007	-0.0475	0.0015
18	MVBR 1	0	0	0	0.0209	0	0.0489
18	MVBR 2	0	0	0	-0.0016	-0.0331	-0.0038
18	MVBR 3	0	0	0	0.0015	-0.0013	0.0035
19	MVBR 1	0	0	0	0.0209	0	-0.0489
19	MVBR 2	0	0	0	0.0016	-0.0331	-0.0038
19	MVBR 3	0	0	0	-0.0015	-0.0013	0.0035
20	MVBR 1	0	0	0	0.0209	0	0.0489
20	MVBR 2	0	0	0	0	-0.0331	0.0001
20	MVBR 3	0	0	0	-0.0001	-0.0011	-0.0003
21	MVBR 1	0	0	0	0.0209	0	-0.0489
21	MVBR 2	0	0	0	0	-0.0331	0.0001
21	MVBR 3	0	0	0	0.0001	-0.0011	-0.0003
22	MVBR 1	0	0	0	0.0207	0	0.0483
22	MVBR 2	0	0	0	-0.0001	-0.0325	-0.0003
22	MVBR 3	0	0	0	-0.0002	-0.0047	-0.0007
23	MVBR 1	0	0	0	0.0207	0	-0.0483
23	MVBR 2	0	0	0	0.0001	-0.0325	-0.0003
23	MVBR 3	0	0	0	0.0002	-0.0047	-0.0007
24	MVBR 1	0	0.00005	0.00001	0.0239	0	0.0571
24	MVBR 2	-0.05576	0.00001	0.02375	0	-0.0299	0
24	MVBR 3	-0.0069	0.00008	0.00328	-0.0001	-0.0018	-0.0002
25	MVBR 1	0	0.00082	0	0.007	0	0.0003
25	MVBR 2	-0.0542	0.00001	0.09734	0	0.0043	0
25	MVBR 3	-0.00527	0.00003	0.00684	0.0001	0.0006	0
26	MVBR 1	0	0.00082	0	0.007	0	-0.0003
26	MVBR 2	-0.0542	-0.00001	-0.09734	0	0.0043	0
26	MVBR 3	-0.00527	-0.00003	-0.00684	-0.0001	0.0006	0
27	MVBR 1	0	0.00005	0.00001	0.0239	0	-0.0571
27	MVBR 2	-0.05576	-0.00001	-0.02375	0	-0.0299	0
27	MVBR 3	-0.0069	-0.00008	-0.00328	0.0001	-0.0018	-0.0002
28	MVBR 2	-0.05646	0.00001	0.02397	0.0001	-0.0302	0.0003
28	MVBR 3	-0.00462	0.00005	0.00196	-0.0008	-0.0001	-0.0018
29	MVBR 1	0	0.00004	0	0.0239	0	0.0571
29	MVBR 2	-0.05678	0	0.02418	0	-0.0304	0
29	MVBR 3	-0.00075	0.00003	0.00063	0	0.0015	-0.0001
30	MVBR 1	0	0.00081	0	0.0071	0	0.0003
30	MVBR 2	-0.05519	0	0.09914	0	0.0043	0
30	MVBR 3	0.00072	0.00001	-0.00394	0	0.0001	0
31	MVBR 1	0	0.00081	0	0.0071	0	-0.0003
31	MVBR 2	-0.05519	0	-0.09914	0	0.0043	0
31	MVBR 3	0.00072	-0.00001	0.00394	0	0.0001	0
32	MVBR 1	0	0.00004	0	0.0239	0	-0.0571
32	MVBR 2	-0.05678	0	-0.02418	0	-0.0304	0
32	MVBR 3	-0.00075	-0.00003	-0.00063	0	0.0015	-0.0001
33	MVBR 1	0	0.00004	0	0.0239	0	0.0571
33	MVBR 2	-0.05673	0	0.02416	0	-0.0304	0
33	MVBR 3	-0.0011	0.00001	0.00078	0	0.0013	0
34	MVBR 1	0	0.00081	0	0.0071	0	0.0003
34	MVBR 2	-0.05514	0	0.09904	0.0005	0.0043	0
34	MVBR 3	0.00038	0	-0.00333	-0.0005	0.0002	0
35	MVBR 1	0	0.00081	0	0.0071	0	-0.0003
35	MVBR 2	-0.05514	0	-0.09904	-0.0005	0.0043	0
35	MVBR 3	0.00038	0	0.00333	0.0005	0.0002	0

Nodo	Cont.	Spostamento			Rotazione		
Ind.	N.br.	ux	uy	uz	rx	ry	rz
36	MVBR 1	0	0.00004	0	0.0239	0	-0.0571
36	MVBR 2	-0.05673	0	-0.02416	0	-0.0304	0
36	MVBR 3	-0.0011	-0.00001	-0.00078	0	0.0013	0
37	MVBR 1	0	0.00005	0	0.0238	0	0.0571
37	MVBR 3	-0.07816	0	0.03404	0	-0.0269	0
38	MVBR 1	0	0.00047	0	-0.0501	0	0.0005
38	MVBR 3	-0.07533	-0.00001	0.06649	0	0.0074	0
39	MVBR 1	0	0.00047	0	-0.0501	0	-0.0005
39	MVBR 3	-0.07533	0.00001	-0.06649	0	0.0074	0
40	MVBR 1	0	0.00005	0	0.0238	0	-0.0571
40	MVBR 3	-0.07816	0	-0.03404	0	-0.0269	0
41	MVBR 1	0	0.00005	0	0.0238	0	0.0571
41	MVBR 3	-0.07851	0	0.03419	0	-0.027	0
42	MVBR 1	0	0.00049	0	-0.05	0	0.0005
42	MVBR 3	-0.07567	0	0.06679	0	0.0075	0
43	MVBR 1	0	0.00049	0	-0.05	0	-0.0005
43	MVBR 3	-0.07567	0	-0.06679	0	0.0075	0
44	MVBR 1	0	0.00005	0	0.0238	0	-0.0571
44	MVBR 3	-0.07851	0	-0.03419	0	-0.027	0
45	MVBR 1	0	0.00005	0	0.0238	0	0.0571
45	MVBR 3	-0.07851	0	0.03419	0	-0.027	0
46	MVBR 1	0	0.00049	0	-0.05	0	0.0005
46	MVBR 3	-0.07567	0	0.06679	0	0.0075	0
47	MVBR 1	0	0.00049	0	-0.05	0	-0.0005
47	MVBR 3	-0.07567	0	-0.06679	0	0.0075	0
48	MVBR 1	0	0.00005	0	0.0238	0	-0.0571
48	MVBR 3	-0.07851	0	-0.03419	0	-0.027	0
49	MVBR 1	0	0.00005	0	0.0238	0	0.0571
49	MVBR 3	-0.07851	0	0.03419	0	-0.027	0
50	MVBR 1	0	0.00049	0	-0.05	0	0.0005
50	MVBR 3	-0.07567	0	0.06679	0	0.0075	0
51	MVBR 1	0	0.00049	0	-0.05	0	-0.0005
51	MVBR 3	-0.07567	0	-0.06679	0	0.0075	0
52	MVBR 1	0	0.00005	0	0.0238	0	-0.0571
52	MVBR 3	-0.07851	0	-0.03419	0	-0.027	0
53	MVBR 1	0	0.00005	0	0.0238	0	0.0571
53	MVBR 3	-0.07816	0	0.03404	0	-0.0269	0
54	MVBR 1	0	0.00047	0	-0.0501	0	0.0005
54	MVBR 3	-0.07533	0.00001	0.06649	0	0.0074	0
55	MVBR 1	0	0.00047	0	-0.0501	0	-0.0005
55	MVBR 3	-0.07533	-0.00001	-0.06649	0	0.0074	0
56	MVBR 1	0	0.00005	0	0.0238	0	-0.0571
56	MVBR 3	-0.07816	0	-0.03404	0	-0.0269	0
57	MVBR 1	0	0.00004	0	0.0239	0	0.0571
57	MVBR 2	-0.05673	0	0.02416	0	-0.0304	0
57	MVBR 3	-0.0011	-0.00001	0.00078	0	0.0013	0
58	MVBR 1	0	0.00081	0	0.0071	0	0.0003
58	MVBR 2	-0.05514	0	0.09904	-0.0005	0.0043	0
58	MVBR 3	0.00038	0	-0.00333	0.0005	0.0002	0
59	MVBR 1	0	0.00081	0	0.0071	0	-0.0003
59	MVBR 2	-0.05514	0	-0.09904	0.0005	0.0043	0
59	MVBR 3	0.00038	0	0.00333	-0.0005	0.0002	0
60	MVBR 1	0	0.00004	0	0.0239	0	-0.0571
60	MVBR 2	-0.05673	0	-0.02416	0	-0.0304	0
60	MVBR 3	-0.0011	0.00001	-0.00078	0	0.0013	0
61	MVBR 1	0	0.00004	0	0.0239	0	0.0571
61	MVBR 2	-0.05678	0	0.02418	0	-0.0304	0
61	MVBR 3	-0.00075	-0.00003	0.00063	0	0.0015	0.0001
62	MVBR 1	0	0.00081	0	0.0071	0	0.0003
62	MVBR 2	-0.05519	0	0.09914	0	0.0043	0
62	MVBR 3	0.00072	-0.00001	-0.00394	0	0.0001	0
63	MVBR 1	0	0.00081	0	0.0071	0	-0.0003
63	MVBR 2	-0.05519	0	-0.09914	0	0.0043	0
63	MVBR 3	0.00072	0.00001	0.00394	0	0.0001	0
64	MVBR 1	0	0.00004	0	0.0239	0	-0.0571
64	MVBR 2	-0.05678	0	-0.02418	0	-0.0304	0
64	MVBR 3	-0.00075	0.00003	-0.00063	0	0.0015	0.0001
65	MVBR 1	0	0.00005	-0.00001	0.0239	0	0.0571
65	MVBR 2	-0.05576	-0.00001	0.02375	0	-0.0299	0
65	MVBR 3	-0.0069	-0.00008	0.00328	0.0001	-0.0018	0.0002
66	MVBR 1	0	0.00082	0	0.007	0	0.0003
66	MVBR 2	-0.0542	-0.00001	0.09734	0	0.0043	0
66	MVBR 3	-0.00527	-0.00003	0.00685	-0.0001	0.0006	0
67	MVBR 1	0	0.00082	0	0.007	0	-0.0003
67	MVBR 2	-0.0542	0.00001	-0.09734	0	0.0043	0
67	MVBR 3	-0.00527	0.00003	-0.00685	0.0001	0.0006	0
68	MVBR 1	0	0.00005	-0.00001	0.0239	0	-0.0571
68	MVBR 2	-0.05576	0.00001	-0.02375	0	-0.0299	0
68	MVBR 3	-0.0069	0.00008	-0.00328	-0.0001	-0.0018	0.0002
69	MVBR 1	0	0.0348	0	-0.0167	0	0.0209
69	MVBR 2	-0.07994	0	0.04989	0	-0.0181	0
69	MVBR 3	-0.00648	0	0.00328	0.0001	0.0026	0.0001
70	MVBR 1	0	0.0348	0	-0.0167	0	-0.0209
70	MVBR 2	-0.07994	0	-0.04989	0	-0.0181	0
70	MVBR 3	-0.00648	0	-0.00328	-0.0001	0.0026	0.0001
71	MVBR 1	0	0.0348	0	-0.0167	0	0.0209
71	MVBR 2	-0.08141	0	0.05081	0	-0.0184	0
71	MVBR 3	0.00235	0	-0.00227	0	0.0046	0
72	MVBR 1	0	0.0348	0	-0.0167	0	-0.0209
72	MVBR 2	-0.08141	0	-0.05081	0	-0.0184	0
72	MVBR 3	0.00235	0	0.00227	0	0.0046	0
73	MVBR 1	0	0.0348	0	-0.0167	0	0.0209
73	MVBR 2	-0.08133	0	0.05075	0	-0.0184	0
73	MVBR 3	0.00185	0	-0.00195	0	0.0045	0
74	MVBR 1	0	0.0348	0	-0.0167	0	-0.0209

Nodo	Cont.	Spostamento			Rotazione		
Ind.	N.br.	ux	uy	uz	rx	ry	rz
74	MVBR 2	-0.08133	0	-0.05075	0	-0.0184	0
74	MVBR 3	0.00185	0	0.00195	0	0.0045	0
75	MVBR 1	0	0.0348	0	-0.0168	0	0.0208
75	MVBR 3	-0.08816	0	0.04673	0	-0.0017	0
76	MVBR 1	0	0.0348	0	-0.0168	0	-0.0208
76	MVBR 3	-0.08816	0	-0.04673	0	-0.0017	0
77	MVBR 1	0	0.0348	0	-0.0168	0	0.0208
77	MVBR 3	-0.08856	0	0.04694	0	-0.0017	0
78	MVBR 1	0	0.0348	0	-0.0168	0	-0.0208
78	MVBR 3	-0.08856	0	-0.04694	0	-0.0017	0
79	MVBR 1	0	0.0348	0	-0.0168	0	0.0208
79	MVBR 3	-0.08856	0	0.04694	0	-0.0017	0
80	MVBR 1	0	0.0348	0	-0.0168	0	-0.0208
80	MVBR 3	-0.08856	0	-0.04694	0	-0.0017	0
81	MVBR 1	0	0.0348	0	-0.0168	0	0.0208
81	MVBR 3	-0.08856	0	0.04694	0	-0.0017	0
82	MVBR 1	0	0.0348	0	-0.0168	0	-0.0208
82	MVBR 3	-0.08856	0	-0.04694	0	-0.0017	0
83	MVBR 1	0	0.0348	0	-0.0168	0	0.0208
83	MVBR 3	-0.08816	0	0.04673	0	-0.0017	0
84	MVBR 1	0	0.0348	0	-0.0168	0	-0.0208
84	MVBR 3	-0.08816	0	-0.04673	0	-0.0017	0
85	MVBR 1	0	0.0348	0	-0.0167	0	0.0209
85	MVBR 2	-0.08133	0	0.05075	0	-0.0184	0
85	MVBR 3	0.00185	0	-0.00195	0	0.0045	0
86	MVBR 1	0	0.0348	0	-0.0167	0	-0.0209
86	MVBR 2	-0.08133	0	-0.05075	0	-0.0184	0
86	MVBR 3	0.00185	0	0.00195	0	0.0045	0
87	MVBR 1	0	0.0348	0	-0.0167	0	0.0209
87	MVBR 2	-0.08141	0	0.05081	0	-0.0184	0
87	MVBR 3	0.00235	0	-0.00227	0	0.0046	0
88	MVBR 1	0	0.0348	0	-0.0167	0	-0.0209
88	MVBR 2	-0.08141	0	-0.05081	0	-0.0184	0
88	MVBR 3	0.00235	0	0.00227	0	0.0046	0
89	MVBR 1	0	0.0348	0	-0.0167	0	0.0209
89	MVBR 2	-0.07994	0	0.04989	0	-0.0181	0
89	MVBR 3	-0.00649	0	0.00328	-0.0001	0.0026	-0.0001
90	MVBR 1	0	0.0348	0	-0.0167	0	-0.0209
90	MVBR 2	-0.07994	0	-0.04989	0	-0.0181	0
90	MVBR 3	-0.00649	0	-0.00328	0.0001	0.0026	-0.0001
91	MVBR 1	0	0.06969	0.00001	-0.0614	0	0.0018
91	MVBR 2	-0.08426	0	0.05933	0	0.0032	0
91	MVBR 3	-0.00371	0	-0.00241	0	0.0028	0
92	MVBR 1	0	0.06969	0.00001	-0.0614	0	-0.0018
92	MVBR 2	-0.08426	0	-0.05933	0	0.0032	0
92	MVBR 3	-0.00371	0	0.00241	0	0.0028	0
93	MVBR 1	0	0.06969	0	-0.0614	0	0.0018
93	MVBR 2	-0.08581	0	0.06041	0	0.0033	0
93	MVBR 3	0.00563	0	-0.00906	0	0.0025	0
94	MVBR 1	0	0.06969	0	-0.0614	0	-0.0018
94	MVBR 2	-0.08581	0	-0.06041	0	0.0033	0
94	MVBR 3	0.00563	0	0.00906	0	0.0025	0
95	MVBR 1	0	0.0697	0	-0.0615	0	0.0018
95	MVBR 2	-0.08573	0	0.06035	0	0.0033	0
95	MVBR 3	0.00509	0	-0.00868	0	0.0025	0
96	MVBR 1	0	0.0697	0	-0.0615	0	-0.0018
96	MVBR 2	-0.08573	0	-0.06035	0	0.0033	0
96	MVBR 3	0.00509	0	0.00868	0	0.0025	0
97	MVBR 1	0	0.06971	0	-0.0598	0	0.0025
97	MVBR 3	-0.08035	0	0.03416	0	0.0104	0
98	MVBR 1	0	0.06971	0	-0.0598	0	-0.0025
98	MVBR 3	-0.08035	0	-0.03416	0	0.0104	0
99	MVBR 1	0	0.06971	0	-0.0598	0	0.0025
99	MVBR 3	-0.08072	0	0.03433	0	0.0104	0
100	MVBR 1	0	0.06971	0	-0.0598	0	-0.0025
100	MVBR 3	-0.08072	0	-0.03433	0	0.0104	0
101	MVBR 1	0	0.06971	0	-0.0599	0	0.0025
101	MVBR 3	-0.08072	0	0.03433	0	0.0104	0
102	MVBR 1	0	0.06971	0	-0.0599	0	-0.0025
102	MVBR 3	-0.08072	0	-0.03433	0	0.0104	0
103	MVBR 1	0	0.06971	0	-0.0598	0	0.0025
103	MVBR 3	-0.08072	0	0.03433	0	0.0104	0
104	MVBR 1	0	0.06971	0	-0.0598	0	-0.0025
104	MVBR 3	-0.08072	0	-0.03433	0	0.0104	0
105	MVBR 1	0	0.06971	0	-0.0598	0	0.0025
105	MVBR 3	-0.08035	0	0.03416	0	0.0104	0
106	MVBR 1	0	0.06971	0	-0.0598	0	-0.0025
106	MVBR 3	-0.08035	0	-0.03416	0	0.0104	0
107	MVBR 1	0	0.0697	0	-0.0615	0	0.0018
107	MVBR 2	-0.08573	0	0.06035	0	0.0033	0
107	MVBR 3	0.00509	0	-0.00868	0	0.0025	0
108	MVBR 1	0	0.0697	0	-0.0615	0	-0.0018
108	MVBR 2	-0.08573	0	-0.06035	0	0.0033	0
108	MVBR 3	0.00509	0	0.00868	0	0.0025	0
109	MVBR 1	0	0.06969	0	-0.0614	0	0.0018
109	MVBR 2	-0.08581	0	0.06041	0	0.0033	0
109	MVBR 3	0.00563	0	-0.00906	0	0.0025	0
110	MVBR 1	0	0.06969	0	-0.0614	0	-0.0018
110	MVBR 2	-0.08581	0	-0.06041	0	0.0033	0
110	MVBR 3	0.00563	0	0.00906	0	0.0025	0
111	MVBR 1	0	0.06969	-0.00001	-0.0614	0	0.0018
111	MVBR 2	-0.08426	0	0.05933	0	0.0032	0
111	MVBR 3	-0.00371	0	-0.00241	0	0.0028	0
112	MVBR 1	0	0.06969	-0.00001	-0.0614	0	-0.0018
112	MVBR 2	-0.08426	0	-0.05933	0	0.0032	0

Nodo	Cont.	Spostamento			Rotazione		
Ind.	N.br.	ux	uy	uz	rx	ry	rz
112	MVBR 3	-0.00371	0	0.00241	0	0.0028	0
113	MVBR 1	0	0.0947	0.00001	-0.0684	0	0
113	MVBR 2	-0.0776	0	0	0	0.0268	0
113	MVBR 3	-0.00383	0	0	0	-0.0023	0
114	MVBR 1	0	0.09468	0	-0.0684	0	0
114	MVBR 2	-0.07903	0	0	0	0.0273	0
114	MVBR 3	0.00477	0	0	0	-0.0053	0
115	MVBR 1	0	0.09464	0	-0.0682	0	0
115	MVBR 2	-0.07895	0	0	0	0.0273	0
115	MVBR 3	0.00428	0	0	0	-0.0051	0
116	MVBR 1	0	0.09459	0	-0.0577	0	0
116	MVBR 3	-0.06798	0	0	0	0.0142	0
117	MVBR 1	0	0.09457	0	-0.0577	0	0
117	MVBR 3	-0.06829	0	0	0	0.0143	0
118	MVBR 1	0	0.09457	0	-0.0577	0	0
118	MVBR 3	-0.06829	0	0	0	0.0143	0
119	MVBR 1	0	0.09457	0	-0.0577	0	0
119	MVBR 3	-0.06829	0	0	0	0.0143	0
120	MVBR 1	0	0.09459	0	-0.0577	0	0
120	MVBR 3	-0.06798	0	0	0	0.0142	0
121	MVBR 1	0	0.09464	0	-0.0682	0	0
121	MVBR 2	-0.07895	0	0	0	0.0273	0
121	MVBR 3	0.00428	0	0	0	-0.0051	0
122	MVBR 1	0	0.09468	0	-0.0684	0	0
122	MVBR 2	-0.07903	0	0	0	0.0273	0
122	MVBR 3	0.00477	0	0	0	-0.0053	0
123	MVBR 1	0	0.0947	-0.00001	-0.0684	0	0
123	MVBR 2	-0.0776	0	0	0	0.0268	0
123	MVBR 3	-0.00383	0	0	0	-0.0023	0

8.3 REAZIONI NODALI

8.3.1 Reazioni nodali estreme

***Nodo**: Nodo sollecitato dalla reazione vincolare.*
***Ind.**: indice del nodo.*
***Cont.**: Contesto a cui si riferisce la reazione vincolare.*
***N.br.**: nome breve della condizione o combinazione di carico.*
***Reazione a traslazione**: reazione vincolare traslazionale del nodo.*
***x**: componente X della reazione vincolare del nodo. [daN]*
***y**: componente Y della reazione vincolare del nodo. [daN]*
***z**: componente Z della reazione vincolare del nodo. [daN]*
***Reazione a rotazione**: reazione vincolare rotazionale del nodo.*
***x**: componente X della reazione a rotazione del nodo. [daN*cm]*
***y**: componente Y della reazione a rotazione del nodo. [daN*cm]*
***z**: componente Z della reazione a rotazione del nodo. [daN*cm]*

Reazioni Fx minime

Vengono mostrati i soli 5 nodi più sollecitati.

Nodo	Cont.	Reazione a traslazione			Reazione a rotazione		
Ind.	N.br.	x	y	z	x	y	z
15	SLU 85	-85985	-1179	99615	0	0	0
13	SLU 84	-72287	1758	85072	0	0	0
11	SLU 84	-57715	2092	68710	0	0	0
17	SLU 85	-51466	-2686	64608	0	0	0
9	SLU 84	-36684	696	48199	0	0	0

Reazioni Fx massime

Vengono mostrati i soli 5 nodi più sollecitati.

Nodo	Cont.	Reazione a traslazione			Reazione a rotazione		
Ind.	N.br.	x	y	z	x	y	z
14	SLU 85	85983	-1167	99609	0	0	0
12	SLU 84	72290	1770	84976	0	0	0
10	SLU 84	57717	2080	68614	0	0	0
16	SLU 85	51466	-2683	64613	0	0	0
8	SLU 84	36681	683	48194	0	0	0

Reazioni Fy minime

Vengono mostrati i soli 5 nodi più sollecitati.

Nodo	Cont.	Reazione a traslazione			Reazione a rotazione		
Ind.	N.br.	x	y	z	x	y	z
22	SLU 99	9483	-3838	27051	0	0	0
23	SLU 99	-9483	-3835	27029	0	0	0
17	SLU 2	-46759	-3221	56899	0	0	0
16	SLU 2	46759	-3221	56899	0	0	0
6	SLU 98	10061	-2558	32269	0	0	0

Reazioni Fy massime

Vengono mostrati i soli 5 nodi più sollecitati.

Nodo	Cont.	Reazione a traslazione			Reazione a rotazione		
Ind.	N.br.	x	y	z	x	y	z
2	SLU 97	10551	5645	32874	0	0	0
3	SLU 97	-10550	5641	32870	0	0	0
11	SLU 72	-57256	2109	67793	0	0	0
10	SLU 72	57257	2104	67757	0	0	0
4	SLU 97	10645	2074	37210	0	0	0

Reazioni Fz minime

Vengono mostrati i soli 5 nodi più sollecitati.

Nodo	Cont.	Reazione a traslazione			Reazione a rotazione		
Ind.	N.br.	x	y	z	x	y	z
6	X SLV	-2893	20	-1314	0	0	0
18	X SLV	-2893	-20	-1314	0	0	0
20	X SLV	-2891	-9	-1308	0	0	0
4	X SLV	-2891	9	-1308	0	0	0
2	X SLV	-2836	23	-1277	0	0	0

Reazioni Fz massime

Vengono mostrati i soli 5 nodi più sollecitati.

Nodo	Cont.	Reazione a traslazione			Reazione a rotazione		
Ind.	N.br.	x	y	z	x	y	z
15	SLU 85	-85985	-1179	99615	0	0	0
14	SLU 85	85983	-1167	99609	0	0	0
13	SLU 84	-72287	1758	85072	0	0	0
12	SLU 84	72290	1770	84976	0	0	0
11	SLU 84	-57715	2092	68710	0	0	0

8.3.2 Reazioni nodali in condizioni di carico

***Nodo**: Nodo sollecitato dalla reazione vincolare.*
***Ind.**: indice del nodo.*
***Cont.**: Contesto a cui si riferisce la reazione vincolare.*
***N.br.**: nome breve della condizione o combinazione di carico.*
***Reazione a traslazione**: reazione vincolare traslazionale del nodo.*
***x**: componente X della reazione vincolare del nodo. [daN]*
***y**: componente Y della reazione vincolare del nodo. [daN]*
***z**: componente Z della reazione vincolare del nodo. [daN]*
***Reazione a rotazione**: reazione vincolare rotazionale del nodo.*
***x**: componente X della reazione a rotazione del nodo. [daN*cm]*
***y**: componente Y della reazione a rotazione del nodo. [daN*cm]*
***z**: componente Z della reazione a rotazione del nodo. [daN*cm]*

Nodo	Cont.	Reazione a traslazione			Reazione a rotazione		
Ind.	N.br.	x	y	z	x	y	z
2	Pesi	6658	2450	18835	0	0	0
2	Eccezione SdC3	1144	1535	5195	0	0	0
2	Neve	239	210	795	0	0	0
2	Eccezionale SdC4	0	0	0	0	0	0
2	Eccezionale SdC1	0	0	0	0	0	0
2	X SLV	-2836	23	-1277	0	0	0
2	Y SLV	-145	-196	-338	0	0	0
2	X SLD	-1269	10	-571	0	0	0
2	Y SLD	-55	-74	-128	0	0	0
2	X SLO	-1547	12	-696	0	0	0
2	Y SLO	-60	-80	-139	0	0	0
3	Pesi	-6658	2450	18835	0	0	0
3	Eccezione SdC3	-1143	1533	5192	0	0	0
3	Neve	-239	209	794	0	0	0
3	Eccezionale SdC4	0	0	0	0	0	0
3	Eccezionale SdC1	0	0	0	0	0	0
3	X SLV	-2836	-23	1277	0	0	0
3	Y SLV	145	-196	-338	0	0	0
3	X SLD	-1269	-10	571	0	0	0
3	Y SLD	55	-74	-128	0	0	0
3	X SLO	-1547	-12	696	0	0	0
3	Y SLO	60	-80	-139	0	0	0
4	Pesi	6275	994	18018	0	0	0
4	Eccezione SdC3	1470	466	8513	0	0	0
4	Neve	376	109	1357	0	0	0
4	Eccezionale SdC4	0	0	0	0	0	0
4	Eccezionale SdC1	0	0	0	0	0	0
4	X SLV	-2891	9	-1308	0	0	0
4	Y SLV	8	-562	19	0	0	0
4	X SLD	-1294	4	-586	0	0	0
4	Y SLD	3	-213	7	0	0	0
4	X SLO	-1577	5	-714	0	0	0
4	Y SLO	3	-231	8	0	0	0
5	Pesi	-6275	994	18018	0	0	0
5	Eccezione SdC3	-1471	464	8501	0	0	0
5	Neve	-376	108	1351	0	0	0
5	Eccezionale SdC4	0	0	0	0	0	0

Nodo	Cont.	Reazione a traslazione			Reazione a rotazione		
Ind.	N.br.	x	y	z	x	y	z
5	Eccezionale SdC1	0	0	0	0	0	0
5	X SLV	-2891	-9	1308	0	0	0
5	Y SLV	-8	-562	19	0	0	0
5	X SLD	-1294	-4	586	0	0	0
5	Y SLD	-3	-213	7	0	0	0
5	X SLO	-1577	-5	714	0	0	0
5	Y SLO	-3	-231	8	0	0	0
6	Pesi	6145	-571	17711	0	0	0
6	Eccezione SdC3	1200	-1155	5567	0	0	0
6	Neve	362	-112	1192	0	0	0
6	Eccezionale SdC4	0	0	0	0	0	0
6	Eccezionale SdC1	160	753	376	0	0	0
6	X SLV	-2893	20	-1314	0	0	0
6	Y SLV	-21	-609	-49	0	0	0
6	X SLD	-1295	9	-588	0	0	0
6	Y SLD	-8	-231	-19	0	0	0
6	X SLO	-1578	11	-717	0	0	0
6	Y SLO	-9	-250	-20	0	0	0
7	Pesi	-6145	-571	17711	0	0	0
7	Eccezione SdC3	-1201	-1153	5556	0	0	0
7	Neve	-362	-111	1186	0	0	0
7	Eccezionale SdC4	0	0	0	0	0	0
7	Eccezionale SdC1	-160	753	376	0	0	0
7	X SLV	-2893	-20	1314	0	0	0
7	Y SLV	21	-609	-49	0	0	0
7	X SLD	-1295	-9	588	0	0	0
7	Y SLD	8	-231	-19	0	0	0
7	X SLO	-1578	-11	717	0	0	0
7	Y SLO	9	-250	-20	0	0	0
8	Pesi	10805	-839	19052	0	0	0
8	Eccezione SdC3	1133	-695	2051	0	0	0
8	Neve	701	-89	1076	0	0	0
8	Eccezionale SdC4	0	0	0	0	0	0
8	Eccezionale SdC1	14286	1505	14260	0	0	0
8	X SLV	-2617	21	-1139	0	0	0
8	Y SLV	-24	-418	-58	0	0	0
8	X SLD	-1215	10	-529	0	0	0
8	Y SLD	-9	-158	-22	0	0	0
8	X SLO	-1477	12	-643	0	0	0
8	Y SLO	-10	-171	-24	0	0	0
9	Pesi	-10805	-839	19052	0	0	0
9	Eccezione SdC3	-1136	-680	2056	0	0	0
9	Neve	-702	-83	1078	0	0	0
9	Eccezionale SdC4	0	0	0	0	0	0
9	Eccezionale SdC1	-14286	1505	14260	0	0	0
9	X SLV	-2617	-21	1139	0	0	0
9	Y SLV	24	-418	-58	0	0	0
9	X SLD	-1215	-10	529	0	0	0
9	Y SLD	9	-158	-22	0	0	0
9	X SLO	-1477	-12	643	0	0	0
9	Y SLO	10	-171	-24	0	0	0
10	Pesi	10662	48	18662	0	0	0
10	Eccezione SdC3	767	-40	1428	0	0	0
10	Neve	784	15	1107	0	0	0
10	Eccezionale SdC4	0	0	0	0	0	0
10	Eccezionale SdC1	28540	1354	28444	0	0	0
10	X SLV	-2626	0	-1138	0	0	0
10	Y SLV	-6	-516	-15	0	0	0
10	X SLD	-1219	0	-528	0	0	0
10	Y SLD	-2	-196	-6	0	0	0
10	X SLO	-1482	0	-642	0	0	0
10	Y SLO	-3	-212	-6	0	0	0
11	Pesi	-10662	48	18662	0	0	0
11	Eccezione SdC3	-764	-27	1528	0	0	0
11	Neve	-782	21	1155	0	0	0
11	Eccezionale SdC4	0	0	0	0	0	0
11	Eccezionale SdC1	-28540	1354	28444	0	0	0
11	X SLV	-2626	0	1138	0	0	0
11	Y SLV	6	-516	-15	0	0	0
11	X SLD	-1219	0	528	0	0	0
11	Y SLD	2	-196	-6	0	0	0
11	X SLO	-1482	0	642	0	0	0
11	Y SLO	3	-212	-6	0	0	0
12	Pesi	10665	0	18670	0	0	0
12	Eccezione SdC3	490	-78	796	0	0	0
12	Neve	986	19	1306	0	0	0
12	Eccezionale SdC4	0	-1	0	0	0	0
12	Eccezionale SdC1	38261	1202	39498	0	0	0
12	X SLV	-2626	0	-1138	0	0	0
12	Y SLV	0	-533	0	0	0	0
12	X SLD	-1219	0	-528	0	0	0
12	Y SLD	0	-202	0	0	0	0
12	X SLO	-1482	0	-642	0	0	0
12	Y SLO	0	-219	0	0	0	0
13	Pesi	-10665	0	18670	0	0	0
13	Eccezione SdC3	-487	-90	896	0	0	0
13	Neve	-985	13	1354	0	0	0
13	Eccezionale SdC4	0	-1	0	0	0	0
13	Eccezionale SdC1	-38261	1202	39498	0	0	0
13	X SLV	-2626	0	1138	0	0	0
13	Y SLV	0	-533	0	0	0	0
13	X SLD	-1219	0	528	0	0	0
13	Y SLD	0	-202	0	0	0	0
13	X SLO	-1482	0	642	0	0	0
13	Y SLO	0	-219	0	0	0	0

Nodo	Cont.	Reazione a traslazione			Reazione a rotazione		
Ind.	N.br.	x	y	z	x	y	z
14	Pesi	10662	-48	18662	0	0	0
14	Eccezione SdC3	22	18	51	0	0	0
14	Neve	1087	6	1431	0	0	0
14	Eccezionale SdC4	3	15	8	0	0	0
14	Eccezionale SdC1	47528	-753	49493	0	0	0
14	X SLV	-2626	0	-1138	0	0	0
14	Y SLV	6	-516	15	0	0	0
14	X SLD	-1219	0	-528	0	0	0
14	Y SLD	2	-196	6	0	0	0
14	X SLO	-1482	0	-642	0	0	0
14	Y SLO	3	-212	6	0	0	0
15	Pesi	-10662	-48	18662	0	0	0
15	Eccezione SdC3	-24	5	57	0	0	0
15	Neve	-1088	0	1433	0	0	0
15	Eccezionale SdC4	-3	15	8	0	0	0
15	Eccezionale SdC1	-47528	-753	49493	0	0	0
15	X SLV	-2626	0	1138	0	0	0
15	Y SLV	-6	-516	15	0	0	0
15	X SLD	-1219	0	528	0	0	0
15	Y SLD	-2	-196	6	0	0	0
15	X SLO	-1482	0	642	0	0	0
15	Y SLO	-3	-212	6	0	0	0
16	Pesi	10805	839	19052	0	0	0
16	Eccezione SdC3	737	255	1136	0	0	0
16	Neve	1112	103	1489	0	0	0
16	Eccezionale SdC4	316	93	333	0	0	0
16	Eccezionale SdC1	23969	-2706	25232	0	0	0
16	X SLV	-2617	-21	-1139	0	0	0
16	Y SLV	24	-418	58	0	0	0
16	X SLD	-1215	-10	-529	0	0	0
16	Y SLD	9	-158	22	0	0	0
16	X SLO	-1477	-12	-643	0	0	0
16	Y SLO	10	-171	24	0	0	0
17	Pesi	-10805	839	19052	0	0	0
17	Eccezione SdC3	-736	251	1131	0	0	0
17	Neve	-1112	101	1486	0	0	0
17	Eccezionale SdC4	-316	93	333	0	0	0
17	Eccezionale SdC1	-23969	-2706	25232	0	0	0
17	X SLV	-2617	21	1139	0	0	0
17	Y SLV	-24	-418	58	0	0	0
17	X SLD	-1215	10	529	0	0	0
17	Y SLD	-9	-158	22	0	0	0
17	X SLO	-1477	12	643	0	0	0
17	Y SLO	-10	-171	24	0	0	0
18	Pesi	6145	571	17711	0	0	0
18	Eccezione SdC3	675	174	2031	0	0	0
18	Neve	381	90	1375	0	0	0
18	Eccezionale SdC4	71	71	560	0	0	0
18	Eccezionale SdC1	287	-1353	677	0	0	0
18	X SLV	-2893	-20	-1314	0	0	0
18	Y SLV	21	-609	49	0	0	0
18	X SLD	-1295	-9	-588	0	0	0
18	Y SLD	8	-231	19	0	0	0
18	X SLO	-1578	-11	-717	0	0	0
18	Y SLO	9	-250	20	0	0	0
19	Pesi	-6145	571	17711	0	0	0
19	Eccezione SdC3	-676	174	2010	0	0	0
19	Neve	-382	90	1365	0	0	0
19	Eccezionale SdC4	-71	71	560	0	0	0
19	Eccezionale SdC1	-287	-1353	677	0	0	0
19	X SLV	-2893	20	1314	0	0	0
19	Y SLV	-21	-609	49	0	0	0
19	X SLD	-1295	9	588	0	0	0
19	Y SLD	-8	-231	19	0	0	0
19	X SLO	-1578	11	717	0	0	0
19	Y SLO	-9	-250	20	0	0	0
20	Pesi	6275	-994	18018	0	0	0
20	Eccezione SdC3	689	-194	2055	0	0	0
20	Neve	382	-142	1374	0	0	0
20	Eccezionale SdC4	76	-71	572	0	0	0
20	Eccezionale SdC1	0	0	0	0	0	0
20	X SLV	-2891	-9	-1308	0	0	0
20	Y SLV	-8	-562	-19	0	0	0
20	X SLD	-1294	-4	-586	0	0	0
20	Y SLD	-3	-213	-7	0	0	0
20	X SLO	-1577	-5	-714	0	0	0
20	Y SLO	-3	-231	-8	0	0	0
21	Pesi	-6275	-994	18018	0	0	0
21	Eccezione SdC3	-688	-191	2046	0	0	0
21	Neve	-382	-140	1370	0	0	0
21	Eccezionale SdC4	-76	-71	572	0	0	0
21	Eccezionale SdC1	0	0	0	0	0	0
21	X SLV	-2891	9	1308	0	0	0
21	Y SLV	8	-562	-19	0	0	0
21	X SLD	-1294	4	586	0	0	0
21	Y SLD	3	-213	-7	0	0	0
21	X SLO	-1577	5	714	0	0	0
21	Y SLO	3	-231	-8	0	0	0
22	Pesi	6658	-2450	18835	0	0	0
22	Eccezione SdC3	407	-288	1177	0	0	0
22	Neve	238	-210	796	0	0	0
22	Eccezionale SdC4	62	-106	341	0	0	0
22	Eccezionale SdC1	0	0	0	0	0	0
22	X SLV	-2836	-23	-1276	0	0	0
22	Y SLV	145	-196	338	0	0	0

Nodo	Cont.	Reazione a traslazione			Reazione a rotazione		
Ind.	N.br.	x	y	z	x	y	z
22	X SLD	-1269	-10	-571	0	0	0
22	Y SLD	55	-74	128	0	0	0
22	X SLO	-1547	-12	-696	0	0	0
22	Y SLO	60	-80	139	0	0	0
23	Pesi	-6658	-2450	18835	0	0	0
23	Eccezione SdC3	-407	-286	1164	0	0	0
23	Neve	-238	-209	790	0	0	0
23	Eccezionale SdC4	-62	-106	341	0	0	0
23	Eccezionale SdC1	0	0	0	0	0	0
23	X SLV	-2836	23	1276	0	0	0
23	Y SLV	-145	-196	338	0	0	0
23	X SLD	-1269	10	571	0	0	0
23	Y SLD	-55	-74	128	0	0	0
23	X SLO	-1547	12	696	0	0	0
23	Y SLO	-60	-80	139	0	0	0

8.3.3 Reazioni nodali in combinazioni di carico

***Nodo**: Nodo sollecitato dalla reazione vincolare.*
***Ind.**: indice del nodo.*
***Cont.**: Contesto a cui si riferisce la reazione vincolare.*
***N.br.**: nome breve della condizione o combinazione di carico.*
***Reazione a traslazione**: reazione vincolare traslazionale del nodo.*
***x**: componente X della reazione vincolare del nodo. [daN]*
***y**: componente Y della reazione vincolare del nodo. [daN]*
***z**: componente Z della reazione vincolare del nodo. [daN]*
***Reazione a rotazione**: reazione vincolare rotazionale del nodo.*
***x**: componente X della reazione a rotazione del nodo. [daN*cm]*
***y**: componente Y della reazione a rotazione del nodo. [daN*cm]*
***z**: componente Z della reazione a rotazione del nodo. [daN*cm]*

Nodo	Cont.	Reazione a traslazione			Reazione a rotazione		
Ind.	N.br.	x	y	z	x	y	z
2	SLU 1	6658	2450	18835	0	0	0
2	SLU 2	6658	2450	18835	0	0	0
2	SLU 3	6658	2450	18835	0	0	0
2	SLU 4	6658	2450	18835	0	0	0
2	SLU 5	6658	2450	18835	0	0	0
2	SLU 6	6838	2608	19431	0	0	0
2	SLU 7	6838	2608	19431	0	0	0
2	SLU 8	6838	2607	19431	0	0	0
2	SLU 9	6838	2607	19431	0	0	0
2	SLU 10	7017	2765	20028	0	0	0
2	SLU 11	7017	2765	20028	0	0	0
2	SLU 12	7017	2765	20028	0	0	0
2	SLU 13	7017	2765	20028	0	0	0
2	SLU 14	7345	3371	21952	0	0	0
2	SLU 15	7345	3371	21952	0	0	0
2	SLU 16	7344	3371	21952	0	0	0
2	SLU 17	7345	3371	21952	0	0	0
2	SLU 18	7524	3528	22548	0	0	0
2	SLU 19	7524	3528	22548	0	0	0
2	SLU 20	7524	3528	22548	0	0	0
2	SLU 21	7524	3528	22548	0	0	0
2	SLU 22	7703	3686	23145	0	0	0
2	SLU 23	7703	3686	23145	0	0	0
2	SLU 24	7703	3686	23145	0	0	0
2	SLU 25	7703	3686	23145	0	0	0
2	SLU 26	8374	4753	26627	0	0	0
2	SLU 27	8374	4753	26627	0	0	0
2	SLU 28	8374	4753	26627	0	0	0
2	SLU 29	8374	4753	26627	0	0	0
2	SLU 30	8553	4910	27223	0	0	0
2	SLU 31	8553	4910	27223	0	0	0
2	SLU 32	8553	4910	27223	0	0	0
2	SLU 33	8553	4910	27223	0	0	0
2	SLU 34	6658	2450	18835	0	0	0
2	SLU 35	6658	2450	18835	0	0	0
2	SLU 36	6658	2450	18835	0	0	0
2	SLU 37	6658	2450	18835	0	0	0
2	SLU 38	6658	2450	18835	0	0	0
2	SLU 39	6838	2608	19431	0	0	0
2	SLU 40	6838	2608	19431	0	0	0
2	SLU 41	6838	2607	19431	0	0	0
2	SLU 42	6838	2607	19431	0	0	0
2	SLU 43	7017	2765	20028	0	0	0
2	SLU 44	7017	2765	20028	0	0	0
2	SLU 45	7017	2765	20028	0	0	0
2	SLU 46	7017	2765	20028	0	0	0
2	SLU 47	7345	3371	21952	0	0	0
2	SLU 48	7345	3371	21952	0	0	0
2	SLU 49	7344	3371	21952	0	0	0
2	SLU 50	7345	3371	21952	0	0	0
2	SLU 51	7524	3528	22548	0	0	0
2	SLU 52	7524	3528	22548	0	0	0
2	SLU 53	7524	3528	22548	0	0	0
2	SLU 54	7524	3528	22548	0	0	0

Nodo	Cont.	Reazione a traslazione			Reazione a rotazione		
Ind.	N.br.	x	y	z	x	y	z
2	SLU 55	7703	3686	23145	0	0	0
2	SLU 56	7703	3686	23145	0	0	0
2	SLU 57	7703	3686	23145	0	0	0
2	SLU 58	7703	3686	23145	0	0	0
2	SLU 59	8374	4753	26627	0	0	0
2	SLU 60	8374	4753	26627	0	0	0
2	SLU 61	8374	4753	26627	0	0	0
2	SLU 62	8374	4753	26627	0	0	0
2	SLU 63	8553	4910	27223	0	0	0
2	SLU 64	8553	4910	27223	0	0	0
2	SLU 65	8553	4910	27223	0	0	0
2	SLU 66	8553	4910	27223	0	0	0
2	SLU 67	8656	3185	24485	0	0	0
2	SLU 68	8656	3185	24485	0	0	0
2	SLU 69	8656	3185	24485	0	0	0
2	SLU 70	8656	3185	24485	0	0	0
2	SLU 71	8656	3185	24485	0	0	0
2	SLU 72	8835	3343	25082	0	0	0
2	SLU 73	8835	3343	25082	0	0	0
2	SLU 74	8835	3342	25082	0	0	0
2	SLU 75	8835	3343	25082	0	0	0
2	SLU 76	9015	3500	25678	0	0	0
2	SLU 77	9015	3500	25678	0	0	0
2	SLU 78	9015	3500	25678	0	0	0
2	SLU 79	9015	3500	25678	0	0	0
2	SLU 80	9342	4106	27602	0	0	0
2	SLU 81	9342	4106	27602	0	0	0
2	SLU 82	9342	4106	27602	0	0	0
2	SLU 83	9342	4106	27602	0	0	0
2	SLU 84	9521	4264	28199	0	0	0
2	SLU 85	9521	4264	28199	0	0	0
2	SLU 86	9521	4263	28199	0	0	0
2	SLU 87	9521	4263	28199	0	0	0
2	SLU 88	9701	4421	28795	0	0	0
2	SLU 89	9701	4421	28795	0	0	0
2	SLU 90	9701	4421	28795	0	0	0
2	SLU 91	9701	4421	28795	0	0	0
2	SLU 92	10371	5488	32277	0	0	0
2	SLU 93	10371	5488	32277	0	0	0
2	SLU 94	10371	5488	32277	0	0	0
2	SLU 95	10371	5488	32277	0	0	0
2	SLU 96	10551	5645	32874	0	0	0
2	SLU 97	10551	5645	32874	0	0	0
2	SLU 98	10551	5645	32874	0	0	0
2	SLU 99	10551	5645	32874	0	0	0
2	SLU 100	8656	3185	24485	0	0	0
2	SLU 101	8656	3185	24485	0	0	0
2	SLU 102	8656	3185	24485	0	0	0
2	SLU 103	8656	3185	24485	0	0	0
2	SLU 104	8656	3185	24485	0	0	0
2	SLU 105	8835	3343	25082	0	0	0
2	SLU 106	8835	3343	25082	0	0	0
2	SLU 107	8835	3342	25082	0	0	0
2	SLU 108	8835	3343	25082	0	0	0
2	SLU 109	9015	3500	25678	0	0	0
2	SLU 110	9015	3500	25678	0	0	0
2	SLU 111	9015	3500	25678	0	0	0
2	SLU 112	9015	3500	25678	0	0	0
2	SLU 113	9342	4106	27602	0	0	0
2	SLU 114	9342	4106	27602	0	0	0
2	SLU 115	9342	4106	27602	0	0	0
2	SLU 116	9342	4106	27602	0	0	0
2	SLU 117	9521	4264	28199	0	0	0
2	SLU 118	9521	4264	28199	0	0	0
2	SLU 119	9521	4263	28199	0	0	0
2	SLU 120	9521	4263	28199	0	0	0
2	SLU 121	9701	4421	28795	0	0	0
2	SLU 122	9701	4421	28795	0	0	0
2	SLU 123	9701	4421	28795	0	0	0
2	SLU 124	9701	4421	28795	0	0	0
2	SLU 125	10371	5488	32277	0	0	0
2	SLU 126	10371	5488	32277	0	0	0
2	SLU 127	10371	5488	32277	0	0	0
2	SLU 128	10371	5488	32277	0	0	0
2	SLU 129	10551	5645	32874	0	0	0
2	SLU 130	10551	5645	32874	0	0	0
2	SLU 131	10551	5645	32874	0	0	0
2	SLU 132	10551	5645	32874	0	0	0
2	SLE RA 1	6658	2450	18835	0	0	0
2	SLE RA 2	6658	2450	18835	0	0	0
2	SLE RA 3	6658	2450	18835	0	0	0
2	SLE RA 4	6658	2450	18835	0	0	0
2	SLE RA 5	6658	2450	18835	0	0	0
2	SLE RA 6	6778	2555	19232	0	0	0
2	SLE RA 7	6778	2555	19232	0	0	0
2	SLE RA 8	6778	2555	19232	0	0	0
2	SLE RA 9	6778	2555	19232	0	0	0
2	SLE RA 10	6897	2660	19630	0	0	0
2	SLE RA 11	6898	2660	19630	0	0	0
2	SLE RA 12	6897	2660	19630	0	0	0
2	SLE RA 13	6898	2660	19630	0	0	0
2	SLE RA 14	7116	3064	20913	0	0	0
2	SLE RA 15	7116	3064	20913	0	0	0
2	SLE RA 16	7116	3064	20913	0	0	0
2	SLE RA 17	7116	3064	20913	0	0	0

Nodo	Cont.	Reazione a traslazione			Reazione a rotazione		
Ind.	N.br.	x	y	z	x	y	z
2	SLE RA 18	7235	3169	21310	0	0	0
2	SLE RA 19	7235	3169	21310	0	0	0
2	SLE RA 20	7235	3169	21310	0	0	0
2	SLE RA 21	7235	3169	21310	0	0	0
2	SLE RA 22	7355	3274	21708	0	0	0
2	SLE RA 23	7355	3274	21708	0	0	0
2	SLE RA 24	7355	3274	21708	0	0	0
2	SLE RA 25	7355	3274	21708	0	0	0
2	SLE RA 26	7802	3985	24030	0	0	0
2	SLE RA 27	7802	3985	24030	0	0	0
2	SLE RA 28	7802	3985	24030	0	0	0
2	SLE RA 29	7802	3985	24030	0	0	0
2	SLE RA 30	7922	4090	24427	0	0	0
2	SLE RA 31	7922	4090	24427	0	0	0
2	SLE RA 32	7922	4090	24427	0	0	0
2	SLE RA 33	7922	4090	24427	0	0	0
2	SLE FR 1	6658	2450	18835	0	0	0
2	SLE FR 2	6658	2450	18835	0	0	0
2	SLE FR 3	6658	2450	18835	0	0	0
2	SLE FR 4	6706	2492	18994	0	0	0
2	SLE FR 5	7116	3064	20913	0	0	0
2	SLE QP 1	6658	2450	18835	0	0	0
2	SLO 1	8223	2462	19573	0	0	0
2	SLO 2	8223	2462	19573	0	0	0
2	SLO 3	8188	2414	19490	0	0	0
2	SLO 4	8188	2414	19490	0	0	0
2	SLO 5	7182	2527	19182	0	0	0
2	SLO 6	7182	2527	19182	0	0	0
2	SLO 7	7063	2366	18905	0	0	0
2	SLO 8	7063	2366	18905	0	0	0
2	SLO 9	6254	2534	18764	0	0	0
2	SLO 10	6254	2534	18764	0	0	0
2	SLO 11	6135	2373	18487	0	0	0
2	SLO 12	6135	2373	18487	0	0	0
2	SLO 13	5129	2487	18180	0	0	0
2	SLO 14	5129	2487	18180	0	0	0
2	SLO 15	5093	2439	18097	0	0	0
2	SLO 16	5093	2439	18097	0	0	0
2	SLD 1	7944	2462	19445	0	0	0
2	SLD 2	7944	2462	19445	0	0	0
2	SLD 3	7911	2418	19368	0	0	0
2	SLD 4	7911	2418	19368	0	0	0
2	SLD 5	7094	2522	19134	0	0	0
2	SLD 6	7094	2522	19134	0	0	0
2	SLD 7	6984	2373	18878	0	0	0
2	SLD 8	6984	2373	18878	0	0	0
2	SLD 9	6333	2528	18791	0	0	0
2	SLD 10	6333	2528	18791	0	0	0
2	SLD 11	6222	2379	18535	0	0	0
2	SLD 12	6222	2379	18535	0	0	0
2	SLD 13	5405	2483	18302	0	0	0
2	SLD 14	5405	2483	18302	0	0	0
2	SLD 15	5372	2438	18225	0	0	0
2	SLD 16	5372	2438	18225	0	0	0
2	SLV 1	9538	2486	20213	0	0	0
2	SLV 2	9538	2486	20213	0	0	0
2	SLV 3	9451	2369	20010	0	0	0
2	SLV 4	9451	2369	20010	0	0	0
2	SLV 5	7654	2640	19555	0	0	0
2	SLV 6	7654	2640	19555	0	0	0
2	SLV 7	7364	2247	18880	0	0	0
2	SLV 8	7364	2247	18880	0	0	0
2	SLV 9	5953	2653	18790	0	0	0
2	SLV 10	5953	2653	18790	0	0	0
2	SLV 11	5662	2261	18114	0	0	0
2	SLV 12	5662	2261	18114	0	0	0
2	SLV 13	3866	2532	17660	0	0	0
2	SLV 14	3866	2532	17660	0	0	0
2	SLV 15	3779	2414	17457	0	0	0
2	SLV 16	3779	2414	17457	0	0	0
3	SLU 1	-6658	2450	18835	0	0	0
3	SLU 2	-6658	2450	18835	0	0	0
3	SLU 3	-6658	2450	18835	0	0	0
3	SLU 4	-6658	2450	18835	0	0	0
3	SLU 5	-6658	2450	18835	0	0	0
3	SLU 6	-6838	2607	19431	0	0	0
3	SLU 7	-6838	2607	19431	0	0	0
3	SLU 8	-6838	2607	19430	0	0	0
3	SLU 9	-6838	2607	19430	0	0	0
3	SLU 10	-7017	2763	20026	0	0	0
3	SLU 11	-7017	2763	20026	0	0	0
3	SLU 12	-7017	2763	20026	0	0	0
3	SLU 13	-7017	2763	20026	0	0	0
3	SLU 14	-7344	3370	21950	0	0	0
3	SLU 15	-7344	3370	21950	0	0	0
3	SLU 16	-7344	3370	21950	0	0	0
3	SLU 17	-7344	3370	21950	0	0	0
3	SLU 18	-7524	3526	22546	0	0	0
3	SLU 19	-7524	3526	22546	0	0	0
3	SLU 20	-7523	3526	22546	0	0	0
3	SLU 21	-7523	3526	22546	0	0	0
3	SLU 22	-7703	3683	23142	0	0	0
3	SLU 23	-7703	3683	23142	0	0	0
3	SLU 24	-7703	3683	23142	0	0	0
3	SLU 25	-7703	3683	23142	0	0	0

Nodo	Cont.	Reazione a traslazione			Reazione a rotazione		
Ind.	N.br.	x	y	z	x	y	z
3	SLU 26	-8373	4749	26624	0	0	0
3	SLU 27	-8373	4749	26624	0	0	0
3	SLU 28	-8373	4749	26624	0	0	0
3	SLU 29	-8373	4749	26624	0	0	0
3	SLU 30	-8552	4906	27219	0	0	0
3	SLU 31	-8552	4906	27219	0	0	0
3	SLU 32	-8552	4906	27219	0	0	0
3	SLU 33	-8552	4906	27219	0	0	0
3	SLU 34	-6658	2450	18835	0	0	0
3	SLU 35	-6658	2450	18835	0	0	0
3	SLU 36	-6658	2450	18835	0	0	0
3	SLU 37	-6658	2450	18835	0	0	0
3	SLU 38	-6658	2450	18835	0	0	0
3	SLU 39	-6838	2607	19431	0	0	0
3	SLU 40	-6838	2607	19431	0	0	0
3	SLU 41	-6838	2607	19430	0	0	0
3	SLU 42	-6838	2607	19430	0	0	0
3	SLU 43	-7017	2763	20026	0	0	0
3	SLU 44	-7017	2763	20026	0	0	0
3	SLU 45	-7017	2763	20026	0	0	0
3	SLU 46	-7017	2763	20026	0	0	0
3	SLU 47	-7344	3370	21950	0	0	0
3	SLU 48	-7344	3370	21950	0	0	0
3	SLU 49	-7344	3370	21950	0	0	0
3	SLU 50	-7344	3370	21950	0	0	0
3	SLU 51	-7524	3526	22546	0	0	0
3	SLU 52	-7524	3526	22546	0	0	0
3	SLU 53	-7523	3526	22546	0	0	0
3	SLU 54	-7523	3526	22546	0	0	0
3	SLU 55	-7703	3683	23142	0	0	0
3	SLU 56	-7703	3683	23142	0	0	0
3	SLU 57	-7703	3683	23142	0	0	0
3	SLU 58	-7703	3683	23142	0	0	0
3	SLU 59	-8373	4749	26624	0	0	0
3	SLU 60	-8373	4749	26624	0	0	0
3	SLU 61	-8373	4749	26624	0	0	0
3	SLU 62	-8373	4749	26624	0	0	0
3	SLU 63	-8552	4906	27219	0	0	0
3	SLU 64	-8552	4906	27219	0	0	0
3	SLU 65	-8552	4906	27219	0	0	0
3	SLU 66	-8552	4906	27219	0	0	0
3	SLU 67	-8656	3185	24485	0	0	0
3	SLU 68	-8656	3185	24485	0	0	0
3	SLU 69	-8656	3185	24485	0	0	0
3	SLU 70	-8656	3185	24485	0	0	0
3	SLU 71	-8656	3185	24485	0	0	0
3	SLU 72	-8835	3342	25081	0	0	0
3	SLU 73	-8835	3342	25081	0	0	0
3	SLU 74	-8835	3342	25081	0	0	0
3	SLU 75	-8835	3342	25081	0	0	0
3	SLU 76	-9014	3498	25677	0	0	0
3	SLU 77	-9014	3498	25677	0	0	0
3	SLU 78	-9014	3498	25677	0	0	0
3	SLU 79	-9014	3498	25677	0	0	0
3	SLU 80	-9342	4105	27601	0	0	0
3	SLU 81	-9342	4105	27601	0	0	0
3	SLU 82	-9342	4105	27601	0	0	0
3	SLU 83	-9342	4105	27601	0	0	0
3	SLU 84	-9521	4262	28196	0	0	0
3	SLU 85	-9521	4262	28196	0	0	0
3	SLU 86	-9521	4261	28196	0	0	0
3	SLU 87	-9521	4261	28196	0	0	0
3	SLU 88	-9700	4418	28792	0	0	0
3	SLU 89	-9700	4418	28792	0	0	0
3	SLU 90	-9700	4418	28792	0	0	0
3	SLU 91	-9700	4418	28792	0	0	0
3	SLU 92	-10371	5485	32274	0	0	0
3	SLU 93	-10371	5485	32274	0	0	0
3	SLU 94	-10371	5485	32274	0	0	0
3	SLU 95	-10371	5485	32274	0	0	0
3	SLU 96	-10550	5641	32870	0	0	0
3	SLU 97	-10550	5641	32870	0	0	0
3	SLU 98	-10550	5641	32870	0	0	0
3	SLU 99	-10550	5641	32870	0	0	0
3	SLU 100	-8656	3185	24485	0	0	0
3	SLU 101	-8656	3185	24485	0	0	0
3	SLU 102	-8656	3185	24485	0	0	0
3	SLU 103	-8656	3185	24485	0	0	0
3	SLU 104	-8656	3185	24485	0	0	0
3	SLU 105	-8835	3342	25081	0	0	0
3	SLU 106	-8835	3342	25081	0	0	0
3	SLU 107	-8835	3342	25081	0	0	0
3	SLU 108	-8835	3342	25081	0	0	0
3	SLU 109	-9014	3498	25677	0	0	0
3	SLU 110	-9014	3498	25677	0	0	0
3	SLU 111	-9014	3498	25677	0	0	0
3	SLU 112	-9014	3498	25677	0	0	0
3	SLU 113	-9342	4105	27601	0	0	0
3	SLU 114	-9342	4105	27601	0	0	0
3	SLU 115	-9342	4105	27601	0	0	0
3	SLU 116	-9342	4105	27601	0	0	0
3	SLU 117	-9521	4262	28196	0	0	0
3	SLU 118	-9521	4262	28196	0	0	0
3	SLU 119	-9521	4261	28196	0	0	0
3	SLU 120	-9521	4261	28196	0	0	0

Nodo	Cont.	Reazione a traslazione			Reazione a rotazione		
Ind.	N.br.	x	y	z	x	y	z
3	SLU 121	-9700	4418	28792	0	0	0
3	SLU 122	-9700	4418	28792	0	0	0
3	SLU 123	-9700	4418	28792	0	0	0
3	SLU 124	-9700	4418	28792	0	0	0
3	SLU 125	-10371	5485	32274	0	0	0
3	SLU 126	-10371	5485	32274	0	0	0
3	SLU 127	-10371	5485	32274	0	0	0
3	SLU 128	-10371	5485	32274	0	0	0
3	SLU 129	-10550	5641	32870	0	0	0
3	SLU 130	-10550	5641	32870	0	0	0
3	SLU 131	-10550	5641	32870	0	0	0
3	SLU 132	-10550	5641	32870	0	0	0
3	SLE RA 1	-6658	2450	18835	0	0	0
3	SLE RA 2	-6658	2450	18835	0	0	0
3	SLE RA 3	-6658	2450	18835	0	0	0
3	SLE RA 4	-6658	2450	18835	0	0	0
3	SLE RA 5	-6658	2450	18835	0	0	0
3	SLE RA 6	-6778	2555	19232	0	0	0
3	SLE RA 7	-6778	2555	19232	0	0	0
3	SLE RA 8	-6778	2555	19232	0	0	0
3	SLE RA 9	-6778	2555	19232	0	0	0
3	SLE RA 10	-6897	2659	19629	0	0	0
3	SLE RA 11	-6897	2659	19629	0	0	0
3	SLE RA 12	-6897	2659	19629	0	0	0
3	SLE RA 13	-6897	2659	19629	0	0	0
3	SLE RA 14	-7116	3063	20912	0	0	0
3	SLE RA 15	-7116	3063	20912	0	0	0
3	SLE RA 16	-7116	3063	20912	0	0	0
3	SLE RA 17	-7116	3063	20912	0	0	0
3	SLE RA 18	-7235	3168	21309	0	0	0
3	SLE RA 19	-7235	3168	21309	0	0	0
3	SLE RA 20	-7235	3168	21309	0	0	0
3	SLE RA 21	-7235	3168	21309	0	0	0
3	SLE RA 22	-7355	3272	21706	0	0	0
3	SLE RA 23	-7355	3272	21706	0	0	0
3	SLE RA 24	-7355	3272	21706	0	0	0
3	SLE RA 25	-7355	3272	21706	0	0	0
3	SLE RA 26	-7802	3983	24027	0	0	0
3	SLE RA 27	-7802	3983	24027	0	0	0
3	SLE RA 28	-7802	3983	24027	0	0	0
3	SLE RA 29	-7802	3983	24027	0	0	0
3	SLE RA 30	-7921	4087	24424	0	0	0
3	SLE RA 31	-7921	4087	24424	0	0	0
3	SLE RA 32	-7921	4087	24424	0	0	0
3	SLE RA 33	-7921	4087	24424	0	0	0
3	SLE FR 1	-6658	2450	18835	0	0	0
3	SLE FR 2	-6658	2450	18835	0	0	0
3	SLE FR 3	-6658	2450	18835	0	0	0
3	SLE FR 4	-6706	2492	18994	0	0	0
3	SLE FR 5	-7116	3063	20912	0	0	0
3	SLE QP 1	-6658	2450	18835	0	0	0
3	SLO 1	-5129	2487	18180	0	0	0
3	SLO 2	-5129	2487	18180	0	0	0
3	SLO 3	-5093	2439	18097	0	0	0
3	SLO 4	-5093	2439	18097	0	0	0
3	SLO 5	-6254	2534	18764	0	0	0
3	SLO 6	-6254	2534	18764	0	0	0
3	SLO 7	-6135	2373	18487	0	0	0
3	SLO 8	-6135	2373	18487	0	0	0
3	SLO 9	-7182	2527	19182	0	0	0
3	SLO 10	-7182	2527	19182	0	0	0
3	SLO 11	-7063	2366	18905	0	0	0
3	SLO 12	-7063	2366	18905	0	0	0
3	SLO 13	-8223	2462	19573	0	0	0
3	SLO 14	-8223	2462	19573	0	0	0
3	SLO 15	-8188	2414	19490	0	0	0
3	SLO 16	-8188	2414	19490	0	0	0
3	SLD 1	-5405	2483	18302	0	0	0
3	SLD 2	-5405	2483	18302	0	0	0
3	SLD 3	-5372	2438	18225	0	0	0
3	SLD 4	-5372	2438	18225	0	0	0
3	SLD 5	-6333	2528	18791	0	0	0
3	SLD 6	-6333	2528	18791	0	0	0
3	SLD 7	-6222	2379	18535	0	0	0
3	SLD 8	-6222	2379	18535	0	0	0
3	SLD 9	-7094	2522	19134	0	0	0
3	SLD 10	-7094	2522	19134	0	0	0
3	SLD 11	-6984	2373	18878	0	0	0
3	SLD 12	-6984	2373	18878	0	0	0
3	SLD 13	-7944	2462	19445	0	0	0
3	SLD 14	-7944	2462	19445	0	0	0
3	SLD 15	-7911	2418	19368	0	0	0
3	SLD 16	-7911	2418	19368	0	0	0
3	SLV 1	-3866	2532	17660	0	0	0
3	SLV 2	-3866	2532	17660	0	0	0
3	SLV 3	-3779	2414	17457	0	0	0
3	SLV 4	-3779	2414	17457	0	0	0
3	SLV 5	-5953	2653	18790	0	0	0
3	SLV 6	-5953	2653	18790	0	0	0
3	SLV 7	-5662	2261	18114	0	0	0
3	SLV 8	-5662	2261	18114	0	0	0
3	SLV 9	-7654	2640	19555	0	0	0
3	SLV 10	-7654	2640	19555	0	0	0
3	SLV 11	-7364	2247	18880	0	0	0
3	SLV 12	-7364	2247	18880	0	0	0

Nodo	Cont.	Reazione a traslazione			Reazione a rotazione		
Ind.	N.br.	x	y	z	x	y	z
3	SLV 13	-9538	2486	20213	0	0	0
3	SLV 14	-9538	2486	20213	0	0	0
3	SLV 15	-9451	2369	20010	0	0	0
3	SLV 16	-9451	2369	20010	0	0	0
4	SLU 1	6275	994	18018	0	0	0
4	SLU 2	6275	994	18018	0	0	0
4	SLU 3	6275	994	18018	0	0	0
4	SLU 4	6275	994	18018	0	0	0
4	SLU 5	6275	994	18018	0	0	0
4	SLU 6	6557	1076	19036	0	0	0
4	SLU 7	6557	1076	19036	0	0	0
4	SLU 8	6557	1076	19036	0	0	0
4	SLU 9	6557	1076	19036	0	0	0
4	SLU 10	6839	1157	20053	0	0	0
4	SLU 11	6839	1158	20053	0	0	0
4	SLU 12	6839	1157	20053	0	0	0
4	SLU 13	6839	1158	20053	0	0	0
4	SLU 14	7157	1274	23125	0	0	0
4	SLU 15	7157	1274	23125	0	0	0
4	SLU 16	7157	1274	23125	0	0	0
4	SLU 17	7157	1274	23125	0	0	0
4	SLU 18	7439	1356	24143	0	0	0
4	SLU 19	7439	1356	24143	0	0	0
4	SLU 20	7439	1355	24143	0	0	0
4	SLU 21	7439	1356	24143	0	0	0
4	SLU 22	7721	1437	25161	0	0	0
4	SLU 23	7721	1437	25161	0	0	0
4	SLU 24	7721	1437	25161	0	0	0
4	SLU 25	7721	1437	25161	0	0	0
4	SLU 26	8481	1694	30787	0	0	0
4	SLU 27	8481	1694	30787	0	0	0
4	SLU 28	8481	1694	30787	0	0	0
4	SLU 29	8481	1694	30787	0	0	0
4	SLU 30	8762	1775	31804	0	0	0
4	SLU 31	8762	1775	31804	0	0	0
4	SLU 32	8762	1775	31804	0	0	0
4	SLU 33	8762	1775	31804	0	0	0
4	SLU 34	6275	994	18018	0	0	0
4	SLU 35	6275	994	18018	0	0	0
4	SLU 36	6275	994	18018	0	0	0
4	SLU 37	6275	994	18018	0	0	0
4	SLU 38	6275	994	18018	0	0	0
4	SLU 39	6557	1076	19036	0	0	0
4	SLU 40	6557	1076	19036	0	0	0
4	SLU 41	6557	1076	19036	0	0	0
4	SLU 42	6557	1076	19036	0	0	0
4	SLU 43	6839	1157	20053	0	0	0
4	SLU 44	6839	1158	20053	0	0	0
4	SLU 45	6839	1157	20053	0	0	0
4	SLU 46	6839	1158	20053	0	0	0
4	SLU 47	7157	1274	23125	0	0	0
4	SLU 48	7157	1274	23125	0	0	0
4	SLU 49	7157	1274	23125	0	0	0
4	SLU 50	7157	1274	23125	0	0	0
4	SLU 51	7439	1356	24143	0	0	0
4	SLU 52	7439	1356	24143	0	0	0
4	SLU 53	7439	1355	24143	0	0	0
4	SLU 54	7439	1356	24143	0	0	0
4	SLU 55	7721	1437	25161	0	0	0
4	SLU 56	7721	1437	25161	0	0	0
4	SLU 57	7721	1437	25161	0	0	0
4	SLU 58	7721	1437	25161	0	0	0
4	SLU 59	8481	1694	30787	0	0	0
4	SLU 60	8481	1694	30787	0	0	0
4	SLU 61	8481	1694	30787	0	0	0
4	SLU 62	8481	1694	30787	0	0	0
4	SLU 63	8762	1775	31804	0	0	0
4	SLU 64	8762	1775	31804	0	0	0
4	SLU 65	8762	1775	31804	0	0	0
4	SLU 66	8762	1775	31804	0	0	0
4	SLU 67	8158	1293	23423	0	0	0
4	SLU 68	8158	1293	23423	0	0	0
4	SLU 69	8158	1293	23423	0	0	0
4	SLU 70	8158	1292	23423	0	0	0
4	SLU 71	8158	1293	23423	0	0	0
4	SLU 72	8440	1374	24441	0	0	0
4	SLU 73	8440	1374	24441	0	0	0
4	SLU 74	8439	1374	24441	0	0	0
4	SLU 75	8440	1374	24441	0	0	0
4	SLU 76	8721	1456	25459	0	0	0
4	SLU 77	8721	1456	25459	0	0	0
4	SLU 78	8721	1456	25459	0	0	0
4	SLU 79	8721	1456	25459	0	0	0
4	SLU 80	9040	1572	28531	0	0	0
4	SLU 81	9040	1572	28531	0	0	0
4	SLU 82	9040	1572	28531	0	0	0
4	SLU 83	9040	1572	28531	0	0	0
4	SLU 84	9322	1654	29548	0	0	0
4	SLU 85	9322	1654	29548	0	0	0
4	SLU 86	9322	1654	29548	0	0	0
4	SLU 87	9322	1654	29548	0	0	0
4	SLU 88	9603	1735	30566	0	0	0
4	SLU 89	9604	1736	30566	0	0	0
4	SLU 90	9603	1735	30566	0	0	0
4	SLU 91	9604	1736	30566	0	0	0

Nodo	Cont.	Reazione a traslazione			Reazione a rotazione		
Ind.	N.br.	x	y	z	x	y	z
4	SLU 92	10363	1992	36192	0	0	0
4	SLU 93	10363	1992	36192	0	0	0
4	SLU 94	10363	1992	36192	0	0	0
4	SLU 95	10363	1992	36192	0	0	0
4	SLU 96	10645	2073	37210	0	0	0
4	SLU 97	10645	2074	37210	0	0	0
4	SLU 98	10645	2073	37210	0	0	0
4	SLU 99	10645	2074	37210	0	0	0
4	SLU 100	8158	1293	23423	0	0	0
4	SLU 101	8158	1293	23423	0	0	0
4	SLU 102	8158	1293	23423	0	0	0
4	SLU 103	8158	1292	23423	0	0	0
4	SLU 104	8158	1293	23423	0	0	0
4	SLU 105	8440	1374	24441	0	0	0
4	SLU 106	8440	1374	24441	0	0	0
4	SLU 107	8439	1374	24441	0	0	0
4	SLU 108	8440	1374	24441	0	0	0
4	SLU 109	8721	1456	25459	0	0	0
4	SLU 110	8721	1456	25459	0	0	0
4	SLU 111	8721	1456	25459	0	0	0
4	SLU 112	8721	1456	25459	0	0	0
4	SLU 113	9040	1572	28531	0	0	0
4	SLU 114	9040	1572	28531	0	0	0
4	SLU 115	9040	1572	28531	0	0	0
4	SLU 116	9040	1572	28531	0	0	0
4	SLU 117	9322	1654	29548	0	0	0
4	SLU 118	9322	1654	29548	0	0	0
4	SLU 119	9322	1654	29548	0	0	0
4	SLU 120	9322	1654	29548	0	0	0
4	SLU 121	9603	1735	30566	0	0	0
4	SLU 122	9604	1736	30566	0	0	0
4	SLU 123	9603	1735	30566	0	0	0
4	SLU 124	9604	1736	30566	0	0	0
4	SLU 125	10363	1992	36192	0	0	0
4	SLU 126	10363	1992	36192	0	0	0
4	SLU 127	10363	1992	36192	0	0	0
4	SLU 128	10363	1992	36192	0	0	0
4	SLU 129	10645	2073	37210	0	0	0
4	SLU 130	10645	2074	37210	0	0	0
4	SLU 131	10645	2073	37210	0	0	0
4	SLU 132	10645	2074	37210	0	0	0
4	SLE RA 1	6275	994	18018	0	0	0
4	SLE RA 2	6275	994	18018	0	0	0
4	SLE RA 3	6275	994	18018	0	0	0
4	SLE RA 4	6275	994	18018	0	0	0
4	SLE RA 5	6275	994	18018	0	0	0
4	SLE RA 6	6463	1049	18696	0	0	0
4	SLE RA 7	6463	1049	18696	0	0	0
4	SLE RA 8	6463	1049	18696	0	0	0
4	SLE RA 9	6463	1049	18696	0	0	0
4	SLE RA 10	6651	1103	19375	0	0	0
4	SLE RA 11	6651	1103	19375	0	0	0
4	SLE RA 12	6651	1103	19375	0	0	0
4	SLE RA 13	6651	1103	19375	0	0	0
4	SLE RA 14	6863	1181	21423	0	0	0
4	SLE RA 15	6863	1181	21423	0	0	0
4	SLE RA 16	6863	1181	21423	0	0	0
4	SLE RA 17	6863	1181	21423	0	0	0
4	SLE RA 18	7051	1235	22101	0	0	0
4	SLE RA 19	7051	1235	22101	0	0	0
4	SLE RA 20	7051	1235	22101	0	0	0
4	SLE RA 21	7051	1235	22101	0	0	0
4	SLE RA 22	7239	1289	22780	0	0	0
4	SLE RA 23	7239	1290	22780	0	0	0
4	SLE RA 24	7239	1289	22780	0	0	0
4	SLE RA 25	7239	1290	22780	0	0	0
4	SLE RA 26	7745	1460	26530	0	0	0
4	SLE RA 27	7745	1461	26530	0	0	0
4	SLE RA 28	7745	1460	26530	0	0	0
4	SLE RA 29	7745	1461	26530	0	0	0
4	SLE RA 30	7933	1515	27209	0	0	0
4	SLE RA 31	7933	1515	27209	0	0	0
4	SLE RA 32	7933	1515	27209	0	0	0
4	SLE RA 33	7933	1515	27209	0	0	0
4	SLE FR 1	6275	994	18018	0	0	0
4	SLE FR 2	6275	994	18018	0	0	0
4	SLE FR 3	6275	994	18018	0	0	0
4	SLE FR 4	6350	1016	18289	0	0	0
4	SLE FR 5	6863	1181	21423	0	0	0
4	SLE QP 1	6275	994	18018	0	0	0
4	SLO 1	7852	1058	18729	0	0	0
4	SLO 2	7852	1058	18729	0	0	0
4	SLO 3	7854	920	18734	0	0	0
4	SLO 4	7854	920	18734	0	0	0
4	SLO 5	6745	1223	18224	0	0	0
4	SLO 6	6745	1223	18224	0	0	0
4	SLO 7	6752	762	18240	0	0	0
4	SLO 8	6752	762	18240	0	0	0
4	SLO 9	5799	1227	17796	0	0	0
4	SLO 10	5799	1227	17796	0	0	0
4	SLO 11	5805	765	17812	0	0	0
4	SLO 12	5805	765	17812	0	0	0
4	SLO 13	4697	1069	17302	0	0	0
4	SLO 14	4697	1069	17302	0	0	0
4	SLO 15	4699	930	17307	0	0	0

Nodo	Cont.	Reazione a traslazione			Reazione a rotazione		
Ind.	N.br.	x	y	z	x	y	z
4	SLO 16	4699	930	17307	0	0	0
4	SLD 1	7569	1054	18601	0	0	0
4	SLD 2	7569	1054	18601	0	0	0
4	SLD 3	7570	926	18606	0	0	0
4	SLD 4	7570	926	18606	0	0	0
4	SLD 5	6660	1206	18186	0	0	0
4	SLD 6	6660	1206	18186	0	0	0
4	SLD 7	6667	780	18201	0	0	0
4	SLD 8	6667	780	18201	0	0	0
4	SLD 9	5884	1209	17835	0	0	0
4	SLD 10	5884	1209	17835	0	0	0
4	SLD 11	5890	782	17849	0	0	0
4	SLD 12	5890	782	17849	0	0	0
4	SLD 13	4980	1062	17430	0	0	0
4	SLD 14	4980	1062	17430	0	0	0
4	SLD 15	4982	935	17434	0	0	0
4	SLD 16	4982	935	17434	0	0	0
4	SLV 1	9164	1154	19320	0	0	0
4	SLV 2	9164	1154	19320	0	0	0
4	SLV 3	9169	816	19332	0	0	0
4	SLV 4	9169	816	19332	0	0	0
4	SLV 5	7134	1554	18391	0	0	0
4	SLV 6	7134	1554	18391	0	0	0
4	SLV 7	7151	429	18430	0	0	0
4	SLV 8	7151	429	18430	0	0	0
4	SLV 9	5400	1559	17606	0	0	0
4	SLV 10	5400	1559	17606	0	0	0
4	SLV 11	5416	435	17645	0	0	0
4	SLV 12	5416	435	17645	0	0	0
4	SLV 13	3381	1172	16704	0	0	0
4	SLV 14	3381	1172	16704	0	0	0
4	SLV 15	3386	835	16715	0	0	0
4	SLV 16	3386	835	16715	0	0	0
5	SLU 1	-6275	994	18018	0	0	0
5	SLU 2	-6275	994	18018	0	0	0
5	SLU 3	-6275	994	18018	0	0	0
5	SLU 4	-6275	994	18018	0	0	0
5	SLU 5	-6275	994	18018	0	0	0
5	SLU 6	-6557	1075	19031	0	0	0
5	SLU 7	-6557	1075	19031	0	0	0
5	SLU 8	-6557	1075	19031	0	0	0
5	SLU 9	-6557	1075	19031	0	0	0
5	SLU 10	-6839	1156	20045	0	0	0
5	SLU 11	-6839	1156	20045	0	0	0
5	SLU 12	-6839	1156	20045	0	0	0
5	SLU 13	-6839	1156	20045	0	0	0
5	SLU 14	-7158	1273	23119	0	0	0
5	SLU 15	-7158	1273	23119	0	0	0
5	SLU 16	-7158	1273	23118	0	0	0
5	SLU 17	-7158	1273	23118	0	0	0
5	SLU 18	-7440	1354	24132	0	0	0
5	SLU 19	-7440	1354	24132	0	0	0
5	SLU 20	-7440	1354	24132	0	0	0
5	SLU 21	-7440	1354	24132	0	0	0
5	SLU 22	-7722	1435	25145	0	0	0
5	SLU 23	-7722	1435	25145	0	0	0
5	SLU 24	-7722	1435	25145	0	0	0
5	SLU 25	-7722	1435	25145	0	0	0
5	SLU 26	-8481	1691	30769	0	0	0
5	SLU 27	-8481	1691	30769	0	0	0
5	SLU 28	-8481	1691	30769	0	0	0
5	SLU 29	-8481	1691	30769	0	0	0
5	SLU 30	-8763	1772	31783	0	0	0
5	SLU 31	-8763	1772	31783	0	0	0
5	SLU 32	-8763	1772	31783	0	0	0
5	SLU 33	-8763	1772	31783	0	0	0
5	SLU 34	-6275	994	18018	0	0	0
5	SLU 35	-6275	994	18018	0	0	0
5	SLU 36	-6275	994	18018	0	0	0
5	SLU 37	-6275	994	18018	0	0	0
5	SLU 38	-6275	994	18018	0	0	0
5	SLU 39	-6557	1075	19031	0	0	0
5	SLU 40	-6557	1075	19031	0	0	0
5	SLU 41	-6557	1075	19031	0	0	0
5	SLU 42	-6557	1075	19031	0	0	0
5	SLU 43	-6839	1156	20045	0	0	0
5	SLU 44	-6839	1156	20045	0	0	0
5	SLU 45	-6839	1156	20045	0	0	0
5	SLU 46	-6839	1156	20045	0	0	0
5	SLU 47	-7158	1273	23119	0	0	0
5	SLU 48	-7158	1273	23119	0	0	0
5	SLU 49	-7158	1273	23118	0	0	0
5	SLU 50	-7158	1273	23118	0	0	0
5	SLU 51	-7440	1354	24132	0	0	0
5	SLU 52	-7440	1354	24132	0	0	0
5	SLU 53	-7440	1354	24132	0	0	0
5	SLU 54	-7440	1354	24132	0	0	0
5	SLU 55	-7722	1435	25145	0	0	0
5	SLU 56	-7722	1435	25145	0	0	0
5	SLU 57	-7722	1435	25145	0	0	0
5	SLU 58	-7722	1435	25145	0	0	0
5	SLU 59	-8481	1691	30769	0	0	0
5	SLU 60	-8481	1691	30769	0	0	0
5	SLU 61	-8481	1691	30769	0	0	0
5	SLU 62	-8481	1691	30769	0	0	0

Nodo	Cont.	Reazione a traslazione			Reazione a rotazione		
Ind.	N.br.	x	y	z	x	y	z
5	SLU 63	-8763	1772	31783	0	0	0
5	SLU 64	-8763	1772	31783	0	0	0
5	SLU 65	-8763	1772	31783	0	0	0
5	SLU 66	-8763	1772	31783	0	0	0
5	SLU 67	-8158	1293	23423	0	0	0
5	SLU 68	-8158	1293	23423	0	0	0
5	SLU 69	-8158	1293	23423	0	0	0
5	SLU 70	-8158	1292	23423	0	0	0
5	SLU 71	-8158	1293	23423	0	0	0
5	SLU 72	-8440	1374	24437	0	0	0
5	SLU 73	-8440	1374	24437	0	0	0
5	SLU 74	-8440	1373	24437	0	0	0
5	SLU 75	-8440	1374	24437	0	0	0
5	SLU 76	-8722	1454	25450	0	0	0
5	SLU 77	-8722	1455	25450	0	0	0
5	SLU 78	-8722	1454	25450	0	0	0
5	SLU 79	-8722	1455	25450	0	0	0
5	SLU 80	-9040	1571	28524	0	0	0
5	SLU 81	-9040	1571	28524	0	0	0
5	SLU 82	-9040	1571	28524	0	0	0
5	SLU 83	-9040	1571	28524	0	0	0
5	SLU 84	-9322	1652	29537	0	0	0
5	SLU 85	-9322	1652	29537	0	0	0
5	SLU 86	-9322	1652	29537	0	0	0
5	SLU 87	-9322	1652	29537	0	0	0
5	SLU 88	-9604	1733	30551	0	0	0
5	SLU 89	-9604	1733	30551	0	0	0
5	SLU 90	-9604	1733	30551	0	0	0
5	SLU 91	-9604	1733	30551	0	0	0
5	SLU 92	-10364	1989	36175	0	0	0
5	SLU 93	-10364	1989	36175	0	0	0
5	SLU 94	-10364	1989	36175	0	0	0
5	SLU 95	-10364	1989	36175	0	0	0
5	SLU 96	-10646	2070	37188	0	0	0
5	SLU 97	-10646	2070	37188	0	0	0
5	SLU 98	-10646	2070	37188	0	0	0
5	SLU 99	-10646	2070	37188	0	0	0
5	SLU 100	-8158	1293	23423	0	0	0
5	SLU 101	-8158	1293	23423	0	0	0
5	SLU 102	-8158	1293	23423	0	0	0
5	SLU 103	-8158	1292	23423	0	0	0
5	SLU 104	-8158	1293	23423	0	0	0
5	SLU 105	-8440	1374	24437	0	0	0
5	SLU 106	-8440	1374	24437	0	0	0
5	SLU 107	-8440	1373	24437	0	0	0
5	SLU 108	-8440	1374	24437	0	0	0
5	SLU 109	-8722	1454	25450	0	0	0
5	SLU 110	-8722	1455	25450	0	0	0
5	SLU 111	-8722	1454	25450	0	0	0
5	SLU 112	-8722	1455	25450	0	0	0
5	SLU 113	-9040	1571	28524	0	0	0
5	SLU 114	-9040	1571	28524	0	0	0
5	SLU 115	-9040	1571	28524	0	0	0
5	SLU 116	-9040	1571	28524	0	0	0
5	SLU 117	-9322	1652	29537	0	0	0
5	SLU 118	-9322	1652	29537	0	0	0
5	SLU 119	-9322	1652	29537	0	0	0
5	SLU 120	-9322	1652	29537	0	0	0
5	SLU 121	-9604	1733	30551	0	0	0
5	SLU 122	-9604	1733	30551	0	0	0
5	SLU 123	-9604	1733	30551	0	0	0
5	SLU 124	-9604	1733	30551	0	0	0
5	SLU 125	-10364	1989	36175	0	0	0
5	SLU 126	-10364	1989	36175	0	0	0
5	SLU 127	-10364	1989	36175	0	0	0
5	SLU 128	-10364	1989	36175	0	0	0
5	SLU 129	-10646	2070	37188	0	0	0
5	SLU 130	-10646	2070	37188	0	0	0
5	SLU 131	-10646	2070	37188	0	0	0
5	SLU 132	-10646	2070	37188	0	0	0
5	SLE RA 1	-6275	994	18018	0	0	0
5	SLE RA 2	-6275	994	18018	0	0	0
5	SLE RA 3	-6275	994	18018	0	0	0
5	SLE RA 4	-6275	994	18018	0	0	0
5	SLE RA 5	-6275	994	18018	0	0	0
5	SLE RA 6	-6463	1048	18694	0	0	0
5	SLE RA 7	-6463	1048	18694	0	0	0
5	SLE RA 8	-6463	1048	18694	0	0	0
5	SLE RA 9	-6463	1048	18694	0	0	0
5	SLE RA 10	-6651	1102	19369	0	0	0
5	SLE RA 11	-6651	1102	19369	0	0	0
5	SLE RA 12	-6651	1102	19369	0	0	0
5	SLE RA 13	-6651	1102	19369	0	0	0
5	SLE RA 14	-6863	1180	21418	0	0	0
5	SLE RA 15	-6863	1180	21418	0	0	0
5	SLE RA 16	-6863	1180	21418	0	0	0
5	SLE RA 17	-6863	1180	21418	0	0	0
5	SLE RA 18	-7051	1234	22094	0	0	0
5	SLE RA 19	-7051	1234	22094	0	0	0
5	SLE RA 20	-7051	1234	22094	0	0	0
5	SLE RA 21	-7051	1234	22094	0	0	0
5	SLE RA 22	-7239	1288	22770	0	0	0
5	SLE RA 23	-7239	1288	22770	0	0	0
5	SLE RA 24	-7239	1288	22770	0	0	0
5	SLE RA 25	-7239	1288	22770	0	0	0

Nodo	Cont.	Reazione a traslazione			Reazione a rotazione		
Ind.	N.br.	x	y	z	x	y	z
5	SLE RA 26	-7746	1459	26519	0	0	0
5	SLE RA 27	-7746	1459	26519	0	0	0
5	SLE RA 28	-7746	1459	26519	0	0	0
5	SLE RA 29	-7746	1459	26519	0	0	0
5	SLE RA 30	-7934	1513	27194	0	0	0
5	SLE RA 31	-7934	1513	27194	0	0	0
5	SLE RA 32	-7934	1513	27194	0	0	0
5	SLE RA 33	-7934	1513	27194	0	0	0
5	SLE FR 1	-6275	994	18018	0	0	0
5	SLE FR 2	-6275	994	18018	0	0	0
5	SLE FR 3	-6275	994	18018	0	0	0
5	SLE FR 4	-6350	1016	18288	0	0	0
5	SLE FR 5	-6863	1180	21418	0	0	0
5	SLE QP 1	-6275	994	18018	0	0	0
5	SLO 1	-4697	1069	17302	0	0	0
5	SLO 2	-4697	1069	17302	0	0	0
5	SLO 3	-4699	930	17307	0	0	0
5	SLO 4	-4699	930	17307	0	0	0
5	SLO 5	-5799	1227	17796	0	0	0
5	SLO 6	-5799	1227	17796	0	0	0
5	SLO 7	-5805	765	17812	0	0	0
5	SLO 8	-5805	765	17812	0	0	0
5	SLO 9	-6745	1223	18224	0	0	0
5	SLO 10	-6745	1223	18224	0	0	0
5	SLO 11	-6752	762	18240	0	0	0
5	SLO 12	-6752	762	18240	0	0	0
5	SLO 13	-7852	1058	18729	0	0	0
5	SLO 14	-7852	1058	18729	0	0	0
5	SLO 15	-7854	920	18734	0	0	0
5	SLO 16	-7854	920	18734	0	0	0
5	SLD 1	-4980	1062	17430	0	0	0
5	SLD 2	-4980	1062	17430	0	0	0
5	SLD 3	-4982	935	17434	0	0	0
5	SLD 4	-4982	935	17434	0	0	0
5	SLD 5	-5884	1209	17835	0	0	0
5	SLD 6	-5884	1209	17835	0	0	0
5	SLD 7	-5890	782	17849	0	0	0
5	SLD 8	-5890	782	17849	0	0	0
5	SLD 9	-6660	1206	18186	0	0	0
5	SLD 10	-6660	1206	18186	0	0	0
5	SLD 11	-6667	780	18201	0	0	0
5	SLD 12	-6667	780	18201	0	0	0
5	SLD 13	-7569	1054	18601	0	0	0
5	SLD 14	-7569	1054	18601	0	0	0
5	SLD 15	-7570	926	18606	0	0	0
5	SLD 16	-7570	926	18606	0	0	0
5	SLV 1	-3381	1172	16704	0	0	0
5	SLV 2	-3381	1172	16704	0	0	0
5	SLV 3	-3386	835	16715	0	0	0
5	SLV 4	-3386	835	16715	0	0	0
5	SLV 5	-5400	1559	17606	0	0	0
5	SLV 6	-5400	1559	17606	0	0	0
5	SLV 7	-5416	435	17645	0	0	0
5	SLV 8	-5416	435	17645	0	0	0
5	SLV 9	-7134	1554	18391	0	0	0
5	SLV 10	-7134	1554	18391	0	0	0
5	SLV 11	-7151	429	18430	0	0	0
5	SLV 12	-7151	429	18430	0	0	0
5	SLV 13	-9164	1154	19320	0	0	0
5	SLV 14	-9164	1154	19320	0	0	0
5	SLV 15	-9169	816	19332	0	0	0
5	SLV 16	-9169	816	19332	0	0	0
6	SLU 1	6145	-571	17711	0	0	0
6	SLU 2	6385	558	18276	0	0	0
6	SLU 3	6385	558	18276	0	0	0
6	SLU 4	6145	-571	17711	0	0	0
6	SLU 5	6325	275	18135	0	0	0
6	SLU 6	6657	474	19169	0	0	0
6	SLU 7	6657	474	19169	0	0	0
6	SLU 8	6417	-655	18605	0	0	0
6	SLU 9	6597	191	19028	0	0	0
6	SLU 10	6688	-739	19499	0	0	0
6	SLU 11	6868	108	19922	0	0	0
6	SLU 12	6688	-739	19499	0	0	0
6	SLU 13	6868	108	19922	0	0	0
6	SLU 14	7105	-135	21616	0	0	0
6	SLU 15	7105	-135	21616	0	0	0
6	SLU 16	6866	-1264	21051	0	0	0
6	SLU 17	7045	-417	21475	0	0	0
6	SLU 18	7377	-219	22509	0	0	0
6	SLU 19	7377	-219	22509	0	0	0
6	SLU 20	7137	-1348	21945	0	0	0
6	SLU 21	7317	-501	22368	0	0	0
6	SLU 22	7409	-1432	22839	0	0	0
6	SLU 23	7588	-585	23262	0	0	0
6	SLU 24	7409	-1432	22839	0	0	0
6	SLU 25	7588	-585	23262	0	0	0
6	SLU 26	7946	-2303	26062	0	0	0
6	SLU 27	8126	-1456	26485	0	0	0
6	SLU 28	7946	-2303	26062	0	0	0
6	SLU 29	8126	-1456	26485	0	0	0
6	SLU 30	8217	-2387	26955	0	0	0
6	SLU 31	8397	-1540	27379	0	0	0
6	SLU 32	8217	-2387	26955	0	0	0
6	SLU 33	8397	-1540	27379	0	0	0

Nodo	Cont.	Reazione a traslazione			Reazione a rotazione		
Ind.	N.br.	x	y	z	x	y	z
6	SLU 34	6145	-571	17711	0	0	0
6	SLU 35	6385	558	18276	0	0	0
6	SLU 36	6385	558	18276	0	0	0
6	SLU 37	6145	-571	17711	0	0	0
6	SLU 38	6325	275	18135	0	0	0
6	SLU 39	6657	474	19169	0	0	0
6	SLU 40	6657	474	19169	0	0	0
6	SLU 41	6417	-655	18605	0	0	0
6	SLU 42	6597	191	19028	0	0	0
6	SLU 43	6688	-739	19499	0	0	0
6	SLU 44	6868	108	19922	0	0	0
6	SLU 45	6688	-739	19499	0	0	0
6	SLU 46	6868	108	19922	0	0	0
6	SLU 47	7105	-135	21616	0	0	0
6	SLU 48	7105	-135	21616	0	0	0
6	SLU 49	6866	-1264	21051	0	0	0
6	SLU 50	7045	-417	21475	0	0	0
6	SLU 51	7377	-219	22509	0	0	0
6	SLU 52	7377	-219	22509	0	0	0
6	SLU 53	7137	-1348	21945	0	0	0
6	SLU 54	7317	-501	22368	0	0	0
6	SLU 55	7409	-1432	22839	0	0	0
6	SLU 56	7588	-585	23262	0	0	0
6	SLU 57	7409	-1432	22839	0	0	0
6	SLU 58	7588	-585	23262	0	0	0
6	SLU 59	7946	-2303	26062	0	0	0
6	SLU 60	8126	-1456	26485	0	0	0
6	SLU 61	7946	-2303	26062	0	0	0
6	SLU 62	8126	-1456	26485	0	0	0
6	SLU 63	8217	-2387	26955	0	0	0
6	SLU 64	8397	-1540	27379	0	0	0
6	SLU 65	8217	-2387	26955	0	0	0
6	SLU 66	8397	-1540	27379	0	0	0
6	SLU 67	7989	-743	23025	0	0	0
6	SLU 68	8229	386	23589	0	0	0
6	SLU 69	8229	386	23589	0	0	0
6	SLU 70	7989	-743	23025	0	0	0
6	SLU 71	8169	104	23448	0	0	0
6	SLU 72	8500	302	24483	0	0	0
6	SLU 73	8500	302	24483	0	0	0
6	SLU 74	8260	-826	23918	0	0	0
6	SLU 75	8440	20	24342	0	0	0
6	SLU 76	8532	-910	24812	0	0	0
6	SLU 77	8712	-64	25235	0	0	0
6	SLU 78	8532	-910	24812	0	0	0
6	SLU 79	8712	-64	25235	0	0	0
6	SLU 80	8949	-306	26929	0	0	0
6	SLU 81	8949	-307	26929	0	0	0
6	SLU 82	8709	-1435	26365	0	0	0
6	SLU 83	8889	-589	26788	0	0	0
6	SLU 84	9220	-390	27823	0	0	0
6	SLU 85	9220	-390	27823	0	0	0
6	SLU 86	8981	-1519	27259	0	0	0
6	SLU 87	9160	-673	27682	0	0	0
6	SLU 88	9252	-1603	28152	0	0	0
6	SLU 89	9432	-756	28575	0	0	0
6	SLU 90	9252	-1603	28152	0	0	0
6	SLU 91	9432	-756	28575	0	0	0
6	SLU 92	9789	-2474	31375	0	0	0
6	SLU 93	9969	-1628	31798	0	0	0
6	SLU 94	9789	-2474	31375	0	0	0
6	SLU 95	9969	-1628	31798	0	0	0
6	SLU 96	10061	-2558	32269	0	0	0
6	SLU 97	10241	-1712	32692	0	0	0
6	SLU 98	10061	-2558	32269	0	0	0
6	SLU 99	10241	-1712	32692	0	0	0
6	SLU 100	7989	-743	23025	0	0	0
6	SLU 101	8229	386	23589	0	0	0
6	SLU 102	8229	386	23589	0	0	0
6	SLU 103	7989	-743	23025	0	0	0
6	SLU 104	8169	104	23448	0	0	0
6	SLU 105	8500	302	24483	0	0	0
6	SLU 106	8500	302	24483	0	0	0
6	SLU 107	8260	-826	23918	0	0	0
6	SLU 108	8440	20	24342	0	0	0
6	SLU 109	8532	-910	24812	0	0	0
6	SLU 110	8712	-64	25235	0	0	0
6	SLU 111	8532	-910	24812	0	0	0
6	SLU 112	8712	-64	25235	0	0	0
6	SLU 113	8949	-306	26929	0	0	0
6	SLU 114	8949	-307	26929	0	0	0
6	SLU 115	8709	-1435	26365	0	0	0
6	SLU 116	8889	-589	26788	0	0	0
6	SLU 117	9220	-390	27823	0	0	0
6	SLU 118	9220	-390	27823	0	0	0
6	SLU 119	8981	-1519	27259	0	0	0
6	SLU 120	9160	-673	27682	0	0	0
6	SLU 121	9252	-1603	28152	0	0	0
6	SLU 122	9432	-756	28575	0	0	0
6	SLU 123	9252	-1603	28152	0	0	0
6	SLU 124	9432	-756	28575	0	0	0
6	SLU 125	9789	-2474	31375	0	0	0
6	SLU 126	9969	-1628	31798	0	0	0
6	SLU 127	9789	-2474	31375	0	0	0
6	SLU 128	9969	-1628	31798	0	0	0

Nodo	Cont.	Reazione a traslazione			Reazione a rotazione		
Ind.	N.br.	x	y	z	x	y	z
6	SLU 129	10061	-2558	32269	0	0	0
6	SLU 130	10241	-1712	32692	0	0	0
6	SLU 131	10061	-2558	32269	0	0	0
6	SLU 132	10241	-1712	32692	0	0	0
6	SLE RA 1	6145	-571	17711	0	0	0
6	SLE RA 2	6305	181	18088	0	0	0
6	SLE RA 3	6305	181	18088	0	0	0
6	SLE RA 4	6145	-571	17711	0	0	0
6	SLE RA 5	6265	-7	17994	0	0	0
6	SLE RA 6	6486	125	18683	0	0	0
6	SLE RA 7	6486	125	18683	0	0	0
6	SLE RA 8	6326	-627	18307	0	0	0
6	SLE RA 9	6446	-63	18589	0	0	0
6	SLE RA 10	6507	-683	18903	0	0	0
6	SLE RA 11	6627	-119	19185	0	0	0
6	SLE RA 12	6507	-683	18903	0	0	0
6	SLE RA 13	6627	-119	19185	0	0	0
6	SLE RA 14	6785	-280	20314	0	0	0
6	SLE RA 15	6785	-281	20314	0	0	0
6	SLE RA 16	6625	-1033	19938	0	0	0
6	SLE RA 17	6745	-469	20220	0	0	0
6	SLE RA 18	6966	-336	20910	0	0	0
6	SLE RA 19	6966	-336	20910	0	0	0
6	SLE RA 20	6806	-1089	20534	0	0	0
6	SLE RA 21	6926	-525	20816	0	0	0
6	SLE RA 22	6987	-1145	21130	0	0	0
6	SLE RA 23	7107	-580	21412	0	0	0
6	SLE RA 24	6987	-1145	21130	0	0	0
6	SLE RA 25	7107	-580	21412	0	0	0
6	SLE RA 26	7346	-1726	23278	0	0	0
6	SLE RA 27	7466	-1161	23560	0	0	0
6	SLE RA 28	7346	-1726	23278	0	0	0
6	SLE RA 29	7466	-1161	23560	0	0	0
6	SLE RA 30	7527	-1782	23874	0	0	0
6	SLE RA 31	7647	-1217	24156	0	0	0
6	SLE RA 32	7527	-1782	23874	0	0	0
6	SLE RA 33	7647	-1217	24156	0	0	0
6	SLE FR 1	6145	-571	17711	0	0	0
6	SLE FR 2	6265	-7	17994	0	0	0
6	SLE FR 3	6145	-571	17711	0	0	0
6	SLE FR 4	6218	-594	17950	0	0	0
6	SLE FR 5	6625	-1033	19938	0	0	0
6	SLE QP 1	6145	-571	17711	0	0	0
6	SLO 1	7726	-507	18434	0	0	0
6	SLO 2	7726	-507	18434	0	0	0
6	SLO 3	7721	-657	18422	0	0	0
6	SLO 4	7721	-657	18422	0	0	0
6	SLO 5	6627	-324	17947	0	0	0
6	SLO 6	6627	-324	17947	0	0	0
6	SLO 7	6610	-825	17906	0	0	0
6	SLO 8	6610	-825	17906	0	0	0
6	SLO 9	5680	-318	17517	0	0	0
6	SLO 10	5680	-318	17517	0	0	0
6	SLO 11	5663	-818	17476	0	0	0
6	SLO 12	5663	-818	17476	0	0	0
6	SLO 13	4570	-485	17001	0	0	0
6	SLO 14	4570	-485	17001	0	0	0
6	SLO 15	4565	-635	16988	0	0	0
6	SLO 16	4565	-635	16988	0	0	0
6	SLD 1	7443	-511	18305	0	0	0
6	SLD 2	7443	-511	18305	0	0	0
6	SLD 3	7438	-650	18294	0	0	0
6	SLD 4	7438	-650	18294	0	0	0
6	SLD 5	6542	-343	17907	0	0	0
6	SLD 6	6542	-343	17907	0	0	0
6	SLD 7	6526	-805	17869	0	0	0
6	SLD 8	6526	-805	17869	0	0	0
6	SLD 9	5765	-337	17554	0	0	0
6	SLD 10	5765	-337	17554	0	0	0
6	SLD 11	5749	-800	17516	0	0	0
6	SLD 12	5749	-800	17516	0	0	0
6	SLD 13	4853	-493	17129	0	0	0
6	SLD 14	4853	-493	17129	0	0	0
6	SLD 15	4848	-631	17118	0	0	0
6	SLD 16	4848	-631	17118	0	0	0
6	SLV 1	9044	-408	19040	0	0	0
6	SLV 2	9044	-408	19040	0	0	0
6	SLV 3	9032	-774	19011	0	0	0
6	SLV 4	9032	-774	19011	0	0	0
6	SLV 5	7034	32	18155	0	0	0
6	SLV 6	7034	32	18155	0	0	0
6	SLV 7	6992	-1187	18056	0	0	0
6	SLV 8	6992	-1187	18056	0	0	0
6	SLV 9	5298	44	17366	0	0	0
6	SLV 10	5298	44	17366	0	0	0
6	SLV 11	5257	-1175	17268	0	0	0
6	SLV 12	5257	-1175	17268	0	0	0
6	SLV 13	3259	-368	16412	0	0	0
6	SLV 14	3259	-368	16412	0	0	0
6	SLV 15	3246	-734	16383	0	0	0
6	SLV 16	3246	-734	16383	0	0	0
7	SLU 1	-6145	-571	17711	0	0	0
7	SLU 2	-6385	558	18276	0	0	0
7	SLU 3	-6385	558	18276	0	0	0
7	SLU 4	-6145	-571	17711	0	0	0

Nodo	Cont.	Reazione a traslazione			Reazione a rotazione		
Ind.	N.br.	x	y	z	x	y	z
7	SLU 5	-6325	275	18135	0	0	0
7	SLU 6	-6657	474	19165	0	0	0
7	SLU 7	-6657	474	19165	0	0	0
7	SLU 8	-6417	-654	18601	0	0	0
7	SLU 9	-6597	192	19024	0	0	0
7	SLU 10	-6689	-738	19491	0	0	0
7	SLU 11	-6868	109	19914	0	0	0
7	SLU 12	-6689	-738	19491	0	0	0
7	SLU 13	-6868	109	19914	0	0	0
7	SLU 14	-7105	-134	21609	0	0	0
7	SLU 15	-7105	-134	21609	0	0	0
7	SLU 16	-6866	-1263	21045	0	0	0
7	SLU 17	-7046	-416	21468	0	0	0
7	SLU 18	-7377	-217	22499	0	0	0
7	SLU 19	-7377	-217	22499	0	0	0
7	SLU 20	-7137	-1346	21935	0	0	0
7	SLU 21	-7317	-499	22358	0	0	0
7	SLU 22	-7409	-1429	22824	0	0	0
7	SLU 23	-7589	-583	23248	0	0	0
7	SLU 24	-7409	-1429	22824	0	0	0
7	SLU 25	-7589	-583	23248	0	0	0
7	SLU 26	-7946	-2300	26045	0	0	0
7	SLU 27	-8126	-1454	26469	0	0	0
7	SLU 28	-7946	-2300	26045	0	0	0
7	SLU 29	-8126	-1454	26469	0	0	0
7	SLU 30	-8218	-2383	26935	0	0	0
7	SLU 31	-8398	-1537	27358	0	0	0
7	SLU 32	-8218	-2383	26935	0	0	0
7	SLU 33	-8398	-1537	27358	0	0	0
7	SLU 34	-6145	-571	17711	0	0	0
7	SLU 35	-6385	558	18276	0	0	0
7	SLU 36	-6385	558	18276	0	0	0
7	SLU 37	-6145	-571	17711	0	0	0
7	SLU 38	-6325	275	18135	0	0	0
7	SLU 39	-6657	474	19165	0	0	0
7	SLU 40	-6657	474	19165	0	0	0
7	SLU 41	-6417	-654	18601	0	0	0
7	SLU 42	-6597	192	19024	0	0	0
7	SLU 43	-6689	-738	19491	0	0	0
7	SLU 44	-6868	109	19914	0	0	0
7	SLU 45	-6689	-738	19491	0	0	0
7	SLU 46	-6868	109	19914	0	0	0
7	SLU 47	-7105	-134	21609	0	0	0
7	SLU 48	-7105	-134	21609	0	0	0
7	SLU 49	-6866	-1263	21045	0	0	0
7	SLU 50	-7046	-416	21468	0	0	0
7	SLU 51	-7377	-217	22499	0	0	0
7	SLU 52	-7377	-217	22499	0	0	0
7	SLU 53	-7137	-1346	21935	0	0	0
7	SLU 54	-7317	-499	22358	0	0	0
7	SLU 55	-7409	-1429	22824	0	0	0
7	SLU 56	-7589	-583	23248	0	0	0
7	SLU 57	-7409	-1429	22824	0	0	0
7	SLU 58	-7589	-583	23248	0	0	0
7	SLU 59	-7946	-2300	26045	0	0	0
7	SLU 60	-8126	-1454	26469	0	0	0
7	SLU 61	-7946	-2300	26045	0	0	0
7	SLU 62	-8126	-1454	26469	0	0	0
7	SLU 63	-8218	-2383	26935	0	0	0
7	SLU 64	-8398	-1537	27358	0	0	0
7	SLU 65	-8218	-2383	26935	0	0	0
7	SLU 66	-8398	-1537	27358	0	0	0
7	SLU 67	-7989	-743	23025	0	0	0
7	SLU 68	-8229	386	23589	0	0	0
7	SLU 69	-8229	386	23589	0	0	0
7	SLU 70	-7989	-743	23025	0	0	0
7	SLU 71	-8169	104	23448	0	0	0
7	SLU 72	-8500	303	24479	0	0	0
7	SLU 73	-8500	303	24479	0	0	0
7	SLU 74	-8261	-826	23914	0	0	0
7	SLU 75	-8440	21	24338	0	0	0
7	SLU 76	-8532	-909	24804	0	0	0
7	SLU 77	-8712	-62	25228	0	0	0
7	SLU 78	-8532	-909	24804	0	0	0
7	SLU 79	-8712	-62	25228	0	0	0
7	SLU 80	-8949	-305	26923	0	0	0
7	SLU 81	-8949	-305	26923	0	0	0
7	SLU 82	-8709	-1434	26358	0	0	0
7	SLU 83	-8889	-588	26782	0	0	0
7	SLU 84	-9221	-389	27812	0	0	0
7	SLU 85	-9221	-389	27812	0	0	0
7	SLU 86	-8981	-1517	27248	0	0	0
7	SLU 87	-9161	-671	27671	0	0	0
7	SLU 88	-9253	-1600	28138	0	0	0
7	SLU 89	-9432	-754	28561	0	0	0
7	SLU 90	-9253	-1600	28138	0	0	0
7	SLU 91	-9432	-754	28561	0	0	0
7	SLU 92	-9790	-2471	31359	0	0	0
7	SLU 93	-9970	-1625	31782	0	0	0
7	SLU 94	-9790	-2472	31359	0	0	0
7	SLU 95	-9970	-1625	31782	0	0	0
7	SLU 96	-10062	-2555	32248	0	0	0
7	SLU 97	-10241	-1708	32672	0	0	0
7	SLU 98	-10062	-2555	32248	0	0	0
7	SLU 99	-10241	-1708	32672	0	0	0

Nodo	Cont.	Reazione a traslazione			Reazione a rotazione		
Ind.	N.br.	x	y	z	x	y	z
7	SLU 100	-7989	-743	23025	0	0	0
7	SLU 101	-8229	386	23589	0	0	0
7	SLU 102	-8229	386	23589	0	0	0
7	SLU 103	-7989	-743	23025	0	0	0
7	SLU 104	-8169	104	23448	0	0	0
7	SLU 105	-8500	303	24479	0	0	0
7	SLU 106	-8500	303	24479	0	0	0
7	SLU 107	-8261	-826	23914	0	0	0
7	SLU 108	-8440	21	24338	0	0	0
7	SLU 109	-8532	-909	24804	0	0	0
7	SLU 110	-8712	-62	25228	0	0	0
7	SLU 111	-8532	-909	24804	0	0	0
7	SLU 112	-8712	-62	25228	0	0	0
7	SLU 113	-8949	-305	26923	0	0	0
7	SLU 114	-8949	-305	26923	0	0	0
7	SLU 115	-8709	-1434	26358	0	0	0
7	SLU 116	-8889	-588	26782	0	0	0
7	SLU 117	-9221	-389	27812	0	0	0
7	SLU 118	-9221	-389	27812	0	0	0
7	SLU 119	-8981	-1517	27248	0	0	0
7	SLU 120	-9161	-671	27671	0	0	0
7	SLU 121	-9253	-1600	28138	0	0	0
7	SLU 122	-9432	-754	28561	0	0	0
7	SLU 123	-9253	-1600	28138	0	0	0
7	SLU 124	-9432	-754	28561	0	0	0
7	SLU 125	-9790	-2471	31359	0	0	0
7	SLU 126	-9970	-1625	31782	0	0	0
7	SLU 127	-9790	-2472	31359	0	0	0
7	SLU 128	-9970	-1625	31782	0	0	0
7	SLU 129	-10062	-2555	32248	0	0	0
7	SLU 130	-10241	-1708	32672	0	0	0
7	SLU 131	-10062	-2555	32248	0	0	0
7	SLU 132	-10241	-1708	32672	0	0	0
7	SLE RA 1	-6145	-571	17711	0	0	0
7	SLE RA 2	-6305	181	18088	0	0	0
7	SLE RA 3	-6305	181	18088	0	0	0
7	SLE RA 4	-6145	-571	17711	0	0	0
7	SLE RA 5	-6265	-7	17994	0	0	0
7	SLE RA 6	-6486	126	18681	0	0	0
7	SLE RA 7	-6486	126	18681	0	0	0
7	SLE RA 8	-6326	-627	18305	0	0	0
7	SLE RA 9	-6446	-62	18587	0	0	0
7	SLE RA 10	-6508	-682	18898	0	0	0
7	SLE RA 11	-6627	-118	19180	0	0	0
7	SLE RA 12	-6508	-682	18898	0	0	0
7	SLE RA 13	-6627	-118	19180	0	0	0
7	SLE RA 14	-6785	-280	20310	0	0	0
7	SLE RA 15	-6785	-280	20310	0	0	0
7	SLE RA 16	-6626	-1032	19934	0	0	0
7	SLE RA 17	-6745	-468	20216	0	0	0
7	SLE RA 18	-6967	-335	20903	0	0	0
7	SLE RA 19	-6967	-335	20903	0	0	0
7	SLE RA 20	-6807	-1088	20527	0	0	0
7	SLE RA 21	-6927	-523	20809	0	0	0
7	SLE RA 22	-6988	-1143	21120	0	0	0
7	SLE RA 23	-7108	-579	21402	0	0	0
7	SLE RA 24	-6988	-1143	21120	0	0	0
7	SLE RA 25	-7108	-579	21402	0	0	0
7	SLE RA 26	-7346	-1724	23267	0	0	0
7	SLE RA 27	-7466	-1159	23550	0	0	0
7	SLE RA 28	-7346	-1724	23267	0	0	0
7	SLE RA 29	-7466	-1159	23549	0	0	0
7	SLE RA 30	-7527	-1779	23860	0	0	0
7	SLE RA 31	-7647	-1215	24143	0	0	0
7	SLE RA 32	-7527	-1779	23860	0	0	0
7	SLE RA 33	-7647	-1215	24143	0	0	0
7	SLE FR 1	-6145	-571	17711	0	0	0
7	SLE FR 2	-6265	-7	17994	0	0	0
7	SLE FR 3	-6145	-571	17711	0	0	0
7	SLE FR 4	-6218	-593	17949	0	0	0
7	SLE FR 5	-6626	-1032	19934	0	0	0
7	SLE QP 1	-6145	-571	17711	0	0	0
7	SLO 1	-4570	-485	17001	0	0	0
7	SLO 2	-4570	-485	17001	0	0	0
7	SLO 3	-4565	-635	16988	0	0	0
7	SLO 4	-4565	-635	16988	0	0	0
7	SLO 5	-5680	-318	17517	0	0	0
7	SLO 6	-5680	-318	17517	0	0	0
7	SLO 7	-5663	-818	17476	0	0	0
7	SLO 8	-5663	-818	17476	0	0	0
7	SLO 9	-6627	-324	17947	0	0	0
7	SLO 10	-6627	-324	17947	0	0	0
7	SLO 11	-6610	-825	17906	0	0	0
7	SLO 12	-6610	-825	17906	0	0	0
7	SLO 13	-7726	-507	18434	0	0	0
7	SLO 14	-7726	-507	18434	0	0	0
7	SLO 15	-7721	-657	18422	0	0	0
7	SLO 16	-7721	-657	18422	0	0	0
7	SLD 1	-4853	-493	17129	0	0	0
7	SLD 2	-4853	-493	17129	0	0	0
7	SLD 3	-4848	-631	17118	0	0	0
7	SLD 4	-4848	-631	17118	0	0	0
7	SLD 5	-5765	-337	17554	0	0	0
7	SLD 6	-5765	-337	17554	0	0	0
7	SLD 7	-5749	-800	17516	0	0	0

Nodo	Cont.	Reazione a traslazione			Reazione a rotazione		
Ind.	N.br.	x	y	z	x	y	z
7	SLD 8	-5749	-800	17516	0	0	0
7	SLD 9	-6542	-343	17907	0	0	0
7	SLD 10	-6542	-343	17907	0	0	0
7	SLD 11	-6526	-805	17869	0	0	0
7	SLD 12	-6526	-805	17869	0	0	0
7	SLD 13	-7443	-511	18305	0	0	0
7	SLD 14	-7443	-511	18305	0	0	0
7	SLD 15	-7438	-650	18294	0	0	0
7	SLD 16	-7438	-650	18294	0	0	0
7	SLV 1	-3259	-368	16412	0	0	0
7	SLV 2	-3259	-368	16412	0	0	0
7	SLV 3	-3246	-734	16383	0	0	0
7	SLV 4	-3246	-734	16383	0	0	0
7	SLV 5	-5298	44	17366	0	0	0
7	SLV 6	-5298	44	17366	0	0	0
7	SLV 7	-5257	-1175	17268	0	0	0
7	SLV 8	-5257	-1175	17268	0	0	0
7	SLV 9	-7034	32	18155	0	0	0
7	SLV 10	-7034	32	18155	0	0	0
7	SLV 11	-6992	-1187	18056	0	0	0
7	SLV 12	-6992	-1187	18056	0	0	0
7	SLV 13	-9044	-408	19040	0	0	0
7	SLV 14	-9044	-408	19040	0	0	0
7	SLV 15	-9032	-774	19011	0	0	0
7	SLV 16	-9032	-774	19011	0	0	0
8	SLU 1	10805	-839	19052	0	0	0
8	SLU 2	32234	1418	40442	0	0	0
8	SLU 3	32234	1418	40442	0	0	0
8	SLU 4	10805	-839	19052	0	0	0
8	SLU 5	26877	854	35094	0	0	0
8	SLU 6	32760	1351	41248	0	0	0
8	SLU 7	32760	1351	41248	0	0	0
8	SLU 8	11331	-906	19858	0	0	0
8	SLU 9	27403	787	35901	0	0	0
8	SLU 10	11856	-973	20665	0	0	0
8	SLU 11	27928	720	36708	0	0	0
8	SLU 12	11856	-973	20665	0	0	0
8	SLU 13	27928	720	36708	0	0	0
8	SLU 14	32914	1001	41672	0	0	0
8	SLU 15	32914	1001	41672	0	0	0
8	SLU 16	11485	-1256	20282	0	0	0
8	SLU 17	27557	437	36325	0	0	0
8	SLU 18	33440	934	42479	0	0	0
8	SLU 19	33440	934	42479	0	0	0
8	SLU 20	12011	-1323	21089	0	0	0
8	SLU 21	28083	370	37131	0	0	0
8	SLU 22	12536	-1390	21896	0	0	0
8	SLU 23	28608	303	37938	0	0	0
8	SLU 24	12536	-1390	21896	0	0	0
8	SLU 25	28608	303	37938	0	0	0
8	SLU 26	12505	-1881	22128	0	0	0
8	SLU 27	28577	-188	38171	0	0	0
8	SLU 28	12505	-1881	22128	0	0	0
8	SLU 29	28577	-188	38171	0	0	0
8	SLU 30	13031	-1948	22935	0	0	0
8	SLU 31	29103	-255	38977	0	0	0
8	SLU 32	13031	-1948	22935	0	0	0
8	SLU 33	29103	-255	38977	0	0	0
8	SLU 34	10805	-839	19052	0	0	0
8	SLU 35	32234	1418	40442	0	0	0
8	SLU 36	32234	1418	40442	0	0	0
8	SLU 37	10805	-839	19052	0	0	0
8	SLU 38	26877	854	35094	0	0	0
8	SLU 39	32760	1351	41248	0	0	0
8	SLU 40	32760	1351	41248	0	0	0
8	SLU 41	11331	-906	19858	0	0	0
8	SLU 42	27403	787	35901	0	0	0
8	SLU 43	11856	-973	20665	0	0	0
8	SLU 44	27928	720	36708	0	0	0
8	SLU 45	11856	-973	20665	0	0	0
8	SLU 46	27928	720	36708	0	0	0
8	SLU 47	32914	1001	41672	0	0	0
8	SLU 48	32914	1001	41672	0	0	0
8	SLU 49	11485	-1256	20282	0	0	0
8	SLU 50	27557	437	36325	0	0	0
8	SLU 51	33440	934	42479	0	0	0
8	SLU 52	33440	934	42479	0	0	0
8	SLU 53	12011	-1323	21089	0	0	0
8	SLU 54	28083	370	37131	0	0	0
8	SLU 55	12536	-1390	21896	0	0	0
8	SLU 56	28608	303	37938	0	0	0
8	SLU 57	12536	-1390	21896	0	0	0
8	SLU 58	28608	303	37938	0	0	0
8	SLU 59	12505	-1881	22128	0	0	0
8	SLU 60	28577	-188	38171	0	0	0
8	SLU 61	12505	-1881	22128	0	0	0
8	SLU 62	28577	-188	38171	0	0	0
8	SLU 63	13031	-1948	22935	0	0	0
8	SLU 64	29103	-255	38977	0	0	0
8	SLU 65	13031	-1948	22935	0	0	0
8	SLU 66	29103	-255	38977	0	0	0
8	SLU 67	14047	-1091	24767	0	0	0
8	SLU 68	35476	1166	46157	0	0	0
8	SLU 69	35476	1166	46157	0	0	0
8	SLU 70	14047	-1091	24767	0	0	0

Nodo	Cont.	Reazione a traslazione			Reazione a rotazione		
Ind.	N.br.	x	y	z	x	y	z
8	SLU 71	30119	602	40810	0	0	0
8	SLU 72	36001	1099	46964	0	0	0
8	SLU 73	36001	1099	46964	0	0	0
8	SLU 74	14572	-1158	25574	0	0	0
8	SLU 75	30644	535	41616	0	0	0
8	SLU 76	15098	-1225	26381	0	0	0
8	SLU 77	31170	468	42423	0	0	0
8	SLU 78	15098	-1225	26381	0	0	0
8	SLU 79	31170	468	42423	0	0	0
8	SLU 80	36156	750	47388	0	0	0
8	SLU 81	36156	750	47388	0	0	0
8	SLU 82	14727	-1508	25998	0	0	0
8	SLU 83	30798	185	42040	0	0	0
8	SLU 84	36681	683	48194	0	0	0
8	SLU 85	36681	683	48194	0	0	0
8	SLU 86	15252	-1575	26804	0	0	0
8	SLU 87	31324	118	42847	0	0	0
8	SLU 88	15778	-1642	27611	0	0	0
8	SLU 89	31850	51	43654	0	0	0
8	SLU 90	15778	-1642	27611	0	0	0
8	SLU 91	31850	51	43654	0	0	0
8	SLU 92	15747	-2133	27844	0	0	0
8	SLU 93	31818	-440	43886	0	0	0
8	SLU 94	15747	-2133	27844	0	0	0
8	SLU 95	31818	-440	43886	0	0	0
8	SLU 96	16272	-2200	28650	0	0	0
8	SLU 97	32344	-507	44693	0	0	0
8	SLU 98	16272	-2200	28650	0	0	0
8	SLU 99	32344	-507	44693	0	0	0
8	SLU 100	14047	-1091	24767	0	0	0
8	SLU 101	35476	1166	46157	0	0	0
8	SLU 102	35476	1166	46157	0	0	0
8	SLU 103	14047	-1091	24767	0	0	0
8	SLU 104	30119	602	40810	0	0	0
8	SLU 105	36001	1099	46964	0	0	0
8	SLU 106	36001	1099	46964	0	0	0
8	SLU 107	14572	-1158	25574	0	0	0
8	SLU 108	30644	535	41616	0	0	0
8	SLU 109	15098	-1225	26381	0	0	0
8	SLU 110	31170	468	42423	0	0	0
8	SLU 111	15098	-1225	26381	0	0	0
8	SLU 112	31170	468	42423	0	0	0
8	SLU 113	36156	750	47388	0	0	0
8	SLU 114	36156	750	47388	0	0	0
8	SLU 115	14727	-1508	25998	0	0	0
8	SLU 116	30798	185	42040	0	0	0
8	SLU 117	36681	683	48194	0	0	0
8	SLU 118	36681	683	48194	0	0	0
8	SLU 119	15252	-1575	26804	0	0	0
8	SLU 120	31324	118	42847	0	0	0
8	SLU 121	15778	-1642	27611	0	0	0
8	SLU 122	31850	51	43654	0	0	0
8	SLU 123	15778	-1642	27611	0	0	0
8	SLU 124	31850	51	43654	0	0	0
8	SLU 125	15747	-2133	27844	0	0	0
8	SLU 126	31818	-440	43886	0	0	0
8	SLU 127	15747	-2133	27844	0	0	0
8	SLU 128	31818	-440	43886	0	0	0
8	SLU 129	16272	-2200	28650	0	0	0
8	SLU 130	32344	-507	44693	0	0	0
8	SLU 131	16272	-2200	28650	0	0	0
8	SLU 132	32344	-507	44693	0	0	0
8	SLE RA 1	10805	-839	19052	0	0	0
8	SLE RA 2	25091	666	33312	0	0	0
8	SLE RA 3	25091	666	33312	0	0	0
8	SLE RA 4	10805	-839	19052	0	0	0
8	SLE RA 5	21520	289	29747	0	0	0
8	SLE RA 6	25442	621	33849	0	0	0
8	SLE RA 7	25442	621	33849	0	0	0
8	SLE RA 8	11155	-884	19589	0	0	0
8	SLE RA 9	21870	245	30284	0	0	0
8	SLE RA 10	11506	-929	20127	0	0	0
8	SLE RA 11	22221	200	30822	0	0	0
8	SLE RA 12	11506	-929	20127	0	0	0
8	SLE RA 13	22221	200	30822	0	0	0
8	SLE RA 14	25545	388	34132	0	0	0
8	SLE RA 15	25545	388	34132	0	0	0
8	SLE RA 16	11258	-1117	19872	0	0	0
8	SLE RA 17	21973	12	30567	0	0	0
8	SLE RA 18	25895	343	34670	0	0	0
8	SLE RA 19	25895	343	34670	0	0	0
8	SLE RA 20	11609	-1162	20410	0	0	0
8	SLE RA 21	22323	-33	31105	0	0	0
8	SLE RA 22	11959	-1206	20948	0	0	0
8	SLE RA 23	22674	-78	31643	0	0	0
8	SLE RA 24	11959	-1206	20948	0	0	0
8	SLE RA 25	22674	-78	31643	0	0	0
8	SLE RA 26	11938	-1534	21103	0	0	0
8	SLE RA 27	22653	-405	31798	0	0	0
8	SLE RA 28	11938	-1534	21103	0	0	0
8	SLE RA 29	22653	-405	31798	0	0	0
8	SLE RA 30	12289	-1578	21640	0	0	0
8	SLE RA 31	23003	-450	32335	0	0	0
8	SLE RA 32	12289	-1578	21640	0	0	0
8	SLE RA 33	23003	-450	32335	0	0	0

Nodo	Cont.	Reazione a traslazione			Reazione a rotazione		
Ind.	N.br.	x	y	z	x	y	z
8	SLE FR 1	10805	-839	19052	0	0	0
8	SLE FR 2	21520	289	29747	0	0	0
8	SLE FR 3	10805	-839	19052	0	0	0
8	SLE FR 4	10945	-857	19267	0	0	0
8	SLE FR 5	11258	-1117	19872	0	0	0
8	SLE QP 1	10805	-839	19052	0	0	0
8	SLO 1	12285	-799	19702	0	0	0
8	SLO 2	12285	-799	19702	0	0	0
8	SLO 3	12279	-902	19688	0	0	0
8	SLO 4	12279	-902	19688	0	0	0
8	SLO 5	11258	-671	19268	0	0	0
8	SLO 6	11258	-671	19268	0	0	0
8	SLO 7	11238	-1014	19221	0	0	0
8	SLO 8	11238	-1014	19221	0	0	0
8	SLO 9	10372	-664	18882	0	0	0
8	SLO 10	10372	-664	18882	0	0	0
8	SLO 11	10352	-1007	18835	0	0	0
8	SLO 12	10352	-1007	18835	0	0	0
8	SLO 13	9331	-776	18416	0	0	0
8	SLO 14	9331	-776	18416	0	0	0
8	SLO 15	9325	-879	18402	0	0	0
8	SLO 16	9325	-879	18402	0	0	0
8	SLD 1	12023	-801	19587	0	0	0
8	SLD 2	12023	-801	19587	0	0	0
8	SLD 3	12017	-896	19574	0	0	0
8	SLD 4	12017	-896	19574	0	0	0
8	SLD 5	11179	-684	19232	0	0	0
8	SLD 6	11179	-684	19232	0	0	0
8	SLD 7	11160	-1000	19188	0	0	0
8	SLD 8	11160	-1000	19188	0	0	0
8	SLD 9	10450	-678	18915	0	0	0
8	SLD 10	10450	-678	18915	0	0	0
8	SLD 11	10431	-995	18871	0	0	0
8	SLD 12	10431	-995	18871	0	0	0
8	SLD 13	9593	-782	18530	0	0	0
8	SLD 14	9593	-782	18530	0	0	0
8	SLD 15	9588	-877	18517	0	0	0
8	SLD 16	9588	-877	18517	0	0	0
8	SLV 1	13430	-735	20208	0	0	0
8	SLV 2	13430	-735	20208	0	0	0
8	SLV 3	13415	-985	20173	0	0	0
8	SLV 4	13415	-985	20173	0	0	0
8	SLV 5	11615	-428	19451	0	0	0
8	SLV 6	11615	-428	19451	0	0	0
8	SLV 7	11566	-1263	19336	0	0	0
8	SLV 8	11566	-1263	19336	0	0	0
8	SLV 9	10044	-415	18768	0	0	0
8	SLV 10	10044	-415	18768	0	0	0
8	SLV 11	9995	-1250	18652	0	0	0
8	SLV 12	9995	-1250	18652	0	0	0
8	SLV 13	8195	-693	17930	0	0	0
8	SLV 14	8195	-693	17930	0	0	0
8	SLV 15	8180	-944	17895	0	0	0
8	SLV 16	8180	-944	17895	0	0	0
9	SLU 1	-10805	-839	19052	0	0	0
9	SLU 2	-32234	1418	40442	0	0	0
9	SLU 3	-32234	1418	40442	0	0	0
9	SLU 4	-10805	-839	19052	0	0	0
9	SLU 5	-26877	854	35094	0	0	0
9	SLU 6	-32761	1356	41250	0	0	0
9	SLU 7	-32761	1356	41250	0	0	0
9	SLU 8	-11331	-901	19860	0	0	0
9	SLU 9	-27403	792	35903	0	0	0
9	SLU 10	-11858	-963	20669	0	0	0
9	SLU 11	-27930	730	36711	0	0	0
9	SLU 12	-11858	-963	20669	0	0	0
9	SLU 13	-27930	730	36711	0	0	0
9	SLU 14	-32916	1010	41675	0	0	0
9	SLU 15	-32916	1010	41675	0	0	0
9	SLU 16	-11486	-1247	20285	0	0	0
9	SLU 17	-27558	445	36328	0	0	0
9	SLU 18	-33442	948	42484	0	0	0
9	SLU 19	-33442	948	42484	0	0	0
9	SLU 20	-12013	-1309	21094	0	0	0
9	SLU 21	-28085	384	37136	0	0	0
9	SLU 22	-12539	-1371	21902	0	0	0
9	SLU 23	-28611	322	37945	0	0	0
9	SLU 24	-12539	-1371	21902	0	0	0
9	SLU 25	-28611	322	37945	0	0	0
9	SLU 26	-12508	-1860	22135	0	0	0
9	SLU 27	-28580	-167	38178	0	0	0
9	SLU 28	-12508	-1860	22135	0	0	0
9	SLU 29	-28580	-167	38178	0	0	0
9	SLU 30	-13035	-1921	22944	0	0	0
9	SLU 31	-29107	-228	38986	0	0	0
9	SLU 32	-13035	-1922	22944	0	0	0
9	SLU 33	-29107	-229	38986	0	0	0
9	SLU 34	-10805	-839	19052	0	0	0
9	SLU 35	-32234	1418	40442	0	0	0
9	SLU 36	-32234	1418	40442	0	0	0
9	SLU 37	-10805	-839	19052	0	0	0
9	SLU 38	-26877	854	35094	0	0	0
9	SLU 39	-32761	1356	41250	0	0	0
9	SLU 40	-32761	1356	41250	0	0	0
9	SLU 41	-11331	-901	19860	0	0	0

Nodo	Cont.	Reazione a traslazione			Reazione a rotazione		
Ind.	N.br.	x	y	z	x	y	z
9	SLU 42	-27403	792	35903	0	0	0
9	SLU 43	-11858	-963	20669	0	0	0
9	SLU 44	-27930	730	36711	0	0	0
9	SLU 45	-11858	-963	20669	0	0	0
9	SLU 46	-27930	730	36711	0	0	0
9	SLU 47	-32916	1010	41675	0	0	0
9	SLU 48	-32916	1010	41675	0	0	0
9	SLU 49	-11486	-1247	20285	0	0	0
9	SLU 50	-27558	445	36328	0	0	0
9	SLU 51	-33442	948	42484	0	0	0
9	SLU 52	-33442	948	42484	0	0	0
9	SLU 53	-12013	-1309	21094	0	0	0
9	SLU 54	-28085	384	37136	0	0	0
9	SLU 55	-12539	-1371	21902	0	0	0
9	SLU 56	-28611	322	37945	0	0	0
9	SLU 57	-12539	-1371	21902	0	0	0
9	SLU 58	-28611	322	37945	0	0	0
9	SLU 59	-12508	-1860	22135	0	0	0
9	SLU 60	-28580	-167	38178	0	0	0
9	SLU 61	-12508	-1860	22135	0	0	0
9	SLU 62	-28580	-167	38178	0	0	0
9	SLU 63	-13035	-1921	22944	0	0	0
9	SLU 64	-29107	-228	38986	0	0	0
9	SLU 65	-13035	-1922	22944	0	0	0
9	SLU 66	-29107	-229	38986	0	0	0
9	SLU 67	-14047	-1091	24767	0	0	0
9	SLU 68	-35476	1166	46157	0	0	0
9	SLU 69	-35476	1166	46157	0	0	0
9	SLU 70	-14047	-1091	24767	0	0	0
9	SLU 71	-30119	602	40810	0	0	0
9	SLU 72	-36002	1105	46966	0	0	0
9	SLU 73	-36002	1104	46966	0	0	0
9	SLU 74	-14573	-1153	25576	0	0	0
9	SLU 75	-30645	540	41618	0	0	0
9	SLU 76	-15099	-1215	26384	0	0	0
9	SLU 77	-31171	478	42427	0	0	0
9	SLU 78	-15099	-1215	26384	0	0	0
9	SLU 79	-31171	478	42427	0	0	0
9	SLU 80	-36157	758	47391	0	0	0
9	SLU 81	-36157	758	47391	0	0	0
9	SLU 82	-14728	-1499	26001	0	0	0
9	SLU 83	-30800	194	42043	0	0	0
9	SLU 84	-36684	696	48199	0	0	0
9	SLU 85	-36684	696	48199	0	0	0
9	SLU 86	-15254	-1561	26809	0	0	0
9	SLU 87	-31326	132	42852	0	0	0
9	SLU 88	-15781	-1623	27618	0	0	0
9	SLU 89	-31853	70	43660	0	0	0
9	SLU 90	-15781	-1623	27618	0	0	0
9	SLU 91	-31853	70	43660	0	0	0
9	SLU 92	-15750	-2111	27851	0	0	0
9	SLU 93	-31822	-418	43893	0	0	0
9	SLU 94	-15750	-2111	27851	0	0	0
9	SLU 95	-31822	-418	43893	0	0	0
9	SLU 96	-16276	-2173	28659	0	0	0
9	SLU 97	-32348	-480	44702	0	0	0
9	SLU 98	-16276	-2173	28659	0	0	0
9	SLU 99	-32348	-480	44702	0	0	0
9	SLU 100	-14047	-1091	24767	0	0	0
9	SLU 101	-35476	1166	46157	0	0	0
9	SLU 102	-35476	1166	46157	0	0	0
9	SLU 103	-14047	-1091	24767	0	0	0
9	SLU 104	-30119	602	40810	0	0	0
9	SLU 105	-36002	1105	46966	0	0	0
9	SLU 106	-36002	1104	46966	0	0	0
9	SLU 107	-14573	-1153	25576	0	0	0
9	SLU 108	-30645	540	41618	0	0	0
9	SLU 109	-15099	-1215	26384	0	0	0
9	SLU 110	-31171	478	42427	0	0	0
9	SLU 111	-15099	-1215	26384	0	0	0
9	SLU 112	-31171	478	42427	0	0	0
9	SLU 113	-36157	758	47391	0	0	0
9	SLU 114	-36157	758	47391	0	0	0
9	SLU 115	-14728	-1499	26001	0	0	0
9	SLU 116	-30800	194	42043	0	0	0
9	SLU 117	-36684	696	48199	0	0	0
9	SLU 118	-36684	696	48199	0	0	0
9	SLU 119	-15254	-1561	26809	0	0	0
9	SLU 120	-31326	132	42852	0	0	0
9	SLU 121	-15781	-1623	27618	0	0	0
9	SLU 122	-31853	70	43660	0	0	0
9	SLU 123	-15781	-1623	27618	0	0	0
9	SLU 124	-31853	70	43660	0	0	0
9	SLU 125	-15750	-2111	27851	0	0	0
9	SLU 126	-31822	-418	43893	0	0	0
9	SLU 127	-15750	-2111	27851	0	0	0
9	SLU 128	-31822	-418	43893	0	0	0
9	SLU 129	-16276	-2173	28659	0	0	0
9	SLU 130	-32348	-480	44702	0	0	0
9	SLU 131	-16276	-2173	28659	0	0	0
9	SLU 132	-32348	-480	44702	0	0	0
9	SLE RA 1	-10805	-839	19052	0	0	0
9	SLE RA 2	-25091	666	33312	0	0	0
9	SLE RA 3	-25091	666	33312	0	0	0
9	SLE RA 4	-10805	-839	19052	0	0	0

Nodo	Cont.	Reazione a traslazione			Reazione a rotazione		
Ind.	N.br.	x	y	z	x	y	z
9	SLE RA 5	-21520	289	29747	0	0	0
9	SLE RA 6	-25442	624	33851	0	0	0
9	SLE RA 7	-25442	624	33851	0	0	0
9	SLE RA 8	-11156	-881	19591	0	0	0
9	SLE RA 9	-21871	248	30286	0	0	0
9	SLE RA 10	-11507	-922	20130	0	0	0
9	SLE RA 11	-22222	207	30825	0	0	0
9	SLE RA 12	-11507	-922	20130	0	0	0
9	SLE RA 13	-22222	207	30825	0	0	0
9	SLE RA 14	-25545	394	34134	0	0	0
9	SLE RA 15	-25545	394	34134	0	0	0
9	SLE RA 16	-11259	-1111	19874	0	0	0
9	SLE RA 17	-21974	17	30569	0	0	0
9	SLE RA 18	-25896	352	34673	0	0	0
9	SLE RA 19	-25896	352	34673	0	0	0
9	SLE RA 20	-11610	-1153	20413	0	0	0
9	SLE RA 21	-22325	-24	31108	0	0	0
9	SLE RA 22	-11961	-1194	20952	0	0	0
9	SLE RA 23	-22676	-65	31647	0	0	0
9	SLE RA 24	-11961	-1194	20952	0	0	0
9	SLE RA 25	-22676	-65	31647	0	0	0
9	SLE RA 26	-11941	-1519	21108	0	0	0
9	SLE RA 27	-22655	-391	31803	0	0	0
9	SLE RA 28	-11941	-1519	21107	0	0	0
9	SLE RA 29	-22655	-391	31802	0	0	0
9	SLE RA 30	-12292	-1561	21646	0	0	0
9	SLE RA 31	-23006	-432	32341	0	0	0
9	SLE RA 32	-12292	-1561	21646	0	0	0
9	SLE RA 33	-23006	-432	32341	0	0	0
9	SLE FR 1	-10805	-839	19052	0	0	0
9	SLE FR 2	-21520	289	29747	0	0	0
9	SLE FR 3	-10805	-839	19052	0	0	0
9	SLE FR 4	-10945	-856	19267	0	0	0
9	SLE FR 5	-11259	-1111	19874	0	0	0
9	SLE QP 1	-10805	-839	19052	0	0	0
9	SLO 1	-9331	-776	18416	0	0	0
9	SLO 2	-9331	-776	18416	0	0	0
9	SLO 3	-9325	-879	18402	0	0	0
9	SLO 4	-9325	-879	18402	0	0	0
9	SLO 5	-10372	-664	18882	0	0	0
9	SLO 6	-10372	-664	18882	0	0	0
9	SLO 7	-10352	-1007	18835	0	0	0
9	SLO 8	-10352	-1007	18835	0	0	0
9	SLO 9	-11258	-671	19268	0	0	0
9	SLO 10	-11258	-671	19268	0	0	0
9	SLO 11	-11238	-1014	19221	0	0	0
9	SLO 12	-11238	-1014	19221	0	0	0
9	SLO 13	-12285	-799	19702	0	0	0
9	SLO 14	-12285	-799	19702	0	0	0
9	SLO 15	-12279	-902	19688	0	0	0
9	SLO 16	-12279	-902	19688	0	0	0
9	SLD 1	-9593	-782	18530	0	0	0
9	SLD 2	-9593	-782	18530	0	0	0
9	SLD 3	-9588	-877	18517	0	0	0
9	SLD 4	-9588	-877	18517	0	0	0
9	SLD 5	-10450	-678	18915	0	0	0
9	SLD 6	-10450	-678	18915	0	0	0
9	SLD 7	-10431	-995	18871	0	0	0
9	SLD 8	-10431	-995	18871	0	0	0
9	SLD 9	-11179	-684	19232	0	0	0
9	SLD 10	-11179	-684	19232	0	0	0
9	SLD 11	-11160	-1000	19188	0	0	0
9	SLD 12	-11160	-1000	19188	0	0	0
9	SLD 13	-12023	-801	19587	0	0	0
9	SLD 14	-12023	-801	19587	0	0	0
9	SLD 15	-12017	-896	19574	0	0	0
9	SLD 16	-12017	-896	19574	0	0	0
9	SLV 1	-8195	-693	17930	0	0	0
9	SLV 2	-8195	-693	17930	0	0	0
9	SLV 3	-8180	-944	17895	0	0	0
9	SLV 4	-8180	-944	17895	0	0	0
9	SLV 5	-10044	-415	18768	0	0	0
9	SLV 6	-10044	-415	18768	0	0	0
9	SLV 7	-9995	-1250	18652	0	0	0
9	SLV 8	-9995	-1250	18652	0	0	0
9	SLV 9	-11615	-428	19451	0	0	0
9	SLV 10	-11615	-428	19451	0	0	0
9	SLV 11	-11566	-1263	19336	0	0	0
9	SLV 12	-11566	-1263	19336	0	0	0
9	SLV 13	-13430	-735	20208	0	0	0
9	SLV 14	-13430	-735	20208	0	0	0
9	SLV 15	-13415	-985	20173	0	0	0
9	SLV 16	-13415	-985	20173	0	0	0
10	SLU 1	10662	48	18662	0	0	0
10	SLU 2	53471	2078	61329	0	0	0
10	SLU 3	53471	2078	61329	0	0	0
10	SLU 4	10662	48	18662	0	0	0
10	SLU 5	42769	1570	50662	0	0	0
10	SLU 6	54059	2090	62159	0	0	0
10	SLU 7	54059	2090	62159	0	0	0
10	SLU 8	11249	59	19492	0	0	0
10	SLU 9	43356	1582	51492	0	0	0
10	SLU 10	11837	71	20322	0	0	0
10	SLU 11	43944	1593	52322	0	0	0
10	SLU 12	11837	71	20322	0	0	0

Nodo	Cont.	Reazione a traslazione			Reazione a rotazione		
Ind.	N.br.	x	y	z	x	y	z
10	SLU 13	43944	1593	52322	0	0	0
10	SLU 14	53931	2054	62185	0	0	0
10	SLU 15	53931	2054	62185	0	0	0
10	SLU 16	11122	24	19519	0	0	0
10	SLU 17	43229	1546	51519	0	0	0
10	SLU 18	54519	2066	63015	0	0	0
10	SLU 19	54519	2066	63015	0	0	0
10	SLU 20	11709	35	20349	0	0	0
10	SLU 21	43816	1558	52349	0	0	0
10	SLU 22	12297	47	21179	0	0	0
10	SLU 23	44404	1570	53179	0	0	0
10	SLU 24	12297	47	21179	0	0	0
10	SLU 25	44404	1569	53179	0	0	0
10	SLU 26	11812	-12	20804	0	0	0
10	SLU 27	43919	1511	52804	0	0	0
10	SLU 28	11812	-12	20804	0	0	0
10	SLU 29	43919	1511	52804	0	0	0
10	SLU 30	12400	0	21634	0	0	0
10	SLU 31	44507	1523	53634	0	0	0
10	SLU 32	12400	0	21634	0	0	0
10	SLU 33	44507	1522	53634	0	0	0
10	SLU 34	10662	48	18662	0	0	0
10	SLU 35	53471	2078	61329	0	0	0
10	SLU 36	53471	2078	61329	0	0	0
10	SLU 37	10662	48	18662	0	0	0
10	SLU 38	42769	1570	50662	0	0	0
10	SLU 39	54059	2090	62159	0	0	0
10	SLU 40	54059	2090	62159	0	0	0
10	SLU 41	11249	59	19492	0	0	0
10	SLU 42	43356	1582	51492	0	0	0
10	SLU 43	11837	71	20322	0	0	0
10	SLU 44	43944	1593	52322	0	0	0
10	SLU 45	11837	71	20322	0	0	0
10	SLU 46	43944	1593	52322	0	0	0
10	SLU 47	53931	2054	62185	0	0	0
10	SLU 48	53931	2054	62185	0	0	0
10	SLU 49	11122	24	19519	0	0	0
10	SLU 50	43229	1546	51519	0	0	0
10	SLU 51	54519	2066	63015	0	0	0
10	SLU 52	54519	2066	63015	0	0	0
10	SLU 53	11709	35	20349	0	0	0
10	SLU 54	43816	1558	52349	0	0	0
10	SLU 55	12297	47	21179	0	0	0
10	SLU 56	44404	1570	53179	0	0	0
10	SLU 57	12297	47	21179	0	0	0
10	SLU 58	44404	1569	53179	0	0	0
10	SLU 59	11812	-12	20804	0	0	0
10	SLU 60	43919	1511	52804	0	0	0
10	SLU 61	11812	-12	20804	0	0	0
10	SLU 62	43919	1511	52804	0	0	0
10	SLU 63	12400	0	21634	0	0	0
10	SLU 64	44507	1523	53634	0	0	0
10	SLU 65	12400	0	21634	0	0	0
10	SLU 66	44507	1522	53634	0	0	0
10	SLU 67	13860	62	24261	0	0	0
10	SLU 68	56669	2093	66927	0	0	0
10	SLU 69	56669	2093	66927	0	0	0
10	SLU 70	13860	62	24261	0	0	0
10	SLU 71	45967	1585	56261	0	0	0
10	SLU 72	57257	2104	67757	0	0	0
10	SLU 73	57257	2104	67757	0	0	0
10	SLU 74	14448	73	25091	0	0	0
10	SLU 75	46555	1596	57091	0	0	0
10	SLU 76	15035	85	25921	0	0	0
10	SLU 77	47142	1608	57921	0	0	0
10	SLU 78	15035	85	25921	0	0	0
10	SLU 79	47142	1608	57921	0	0	0
10	SLU 80	57130	2069	67784	0	0	0
10	SLU 81	57130	2069	67784	0	0	0
10	SLU 82	14320	38	25118	0	0	0
10	SLU 83	46427	1561	57117	0	0	0
10	SLU 84	57717	2080	68614	0	0	0
10	SLU 85	57717	2080	68614	0	0	0
10	SLU 86	14908	49	25948	0	0	0
10	SLU 87	47015	1572	57947	0	0	0
10	SLU 88	15496	61	26778	0	0	0
10	SLU 89	47603	1584	58778	0	0	0
10	SLU 90	15496	61	26778	0	0	0
10	SLU 91	47603	1584	58778	0	0	0
10	SLU 92	15011	3	26403	0	0	0
10	SLU 93	47118	1526	58403	0	0	0
10	SLU 94	15011	3	26403	0	0	0
10	SLU 95	47118	1525	58403	0	0	0
10	SLU 96	15598	14	27233	0	0	0
10	SLU 97	47705	1537	59233	0	0	0
10	SLU 98	15598	14	27233	0	0	0
10	SLU 99	47705	1537	59233	0	0	0
10	SLU 100	13860	62	24261	0	0	0
10	SLU 101	56669	2093	66927	0	0	0
10	SLU 102	56669	2093	66927	0	0	0
10	SLU 103	13860	62	24261	0	0	0
10	SLU 104	45967	1585	56261	0	0	0
10	SLU 105	57257	2104	67757	0	0	0
10	SLU 106	57257	2104	67757	0	0	0
10	SLU 107	14448	73	25091	0	0	0

Nodo	Cont.	Reazione a traslazione			Reazione a rotazione		
Ind.	N.br.	x	y	z	x	y	z
10	SLU 108	46555	1596	57091	0	0	0
10	SLU 109	15035	85	25921	0	0	0
10	SLU 110	47142	1608	57921	0	0	0
10	SLU 111	15035	85	25921	0	0	0
10	SLU 112	47142	1608	57921	0	0	0
10	SLU 113	57130	2069	67784	0	0	0
10	SLU 114	57130	2069	67784	0	0	0
10	SLU 115	14320	38	25118	0	0	0
10	SLU 116	46427	1561	57117	0	0	0
10	SLU 117	57717	2080	68614	0	0	0
10	SLU 118	57717	2080	68614	0	0	0
10	SLU 119	14908	49	25948	0	0	0
10	SLU 120	47015	1572	57947	0	0	0
10	SLU 121	15496	61	26778	0	0	0
10	SLU 122	47603	1584	58778	0	0	0
10	SLU 123	15496	61	26778	0	0	0
10	SLU 124	47603	1584	58778	0	0	0
10	SLU 125	15011	3	26403	0	0	0
10	SLU 126	47118	1526	58403	0	0	0
10	SLU 127	15011	3	26403	0	0	0
10	SLU 128	47118	1525	58403	0	0	0
10	SLU 129	15598	14	27233	0	0	0
10	SLU 130	47705	1537	59233	0	0	0
10	SLU 131	15598	14	27233	0	0	0
10	SLU 132	47705	1537	59233	0	0	0
10	SLE RA 1	10662	48	18662	0	0	0
10	SLE RA 2	39201	1402	47106	0	0	0
10	SLE RA 3	39201	1401	47106	0	0	0
10	SLE RA 4	10662	48	18662	0	0	0
10	SLE RA 5	32066	1063	39995	0	0	0
10	SLE RA 6	39593	1409	47660	0	0	0
10	SLE RA 7	39593	1409	47660	0	0	0
10	SLE RA 8	11053	55	19216	0	0	0
10	SLE RA 9	32458	1070	40549	0	0	0
10	SLE RA 10	11445	63	19769	0	0	0
10	SLE RA 11	32850	1078	41102	0	0	0
10	SLE RA 12	11445	63	19769	0	0	0
10	SLE RA 13	32850	1078	41102	0	0	0
10	SLE RA 14	39508	1386	47678	0	0	0
10	SLE RA 15	39508	1386	47678	0	0	0
10	SLE RA 16	10968	32	19233	0	0	0
10	SLE RA 17	32373	1047	40567	0	0	0
10	SLE RA 18	39900	1393	48231	0	0	0
10	SLE RA 19	39900	1393	48231	0	0	0
10	SLE RA 20	11360	39	19787	0	0	0
10	SLE RA 21	32765	1055	41120	0	0	0
10	SLE RA 22	11752	47	20340	0	0	0
10	SLE RA 23	33157	1062	41673	0	0	0
10	SLE RA 24	11752	47	20340	0	0	0
10	SLE RA 25	33157	1062	41673	0	0	0
10	SLE RA 26	11429	8	20090	0	0	0
10	SLE RA 27	32833	1023	41423	0	0	0
10	SLE RA 28	11429	8	20090	0	0	0
10	SLE RA 29	32833	1023	41423	0	0	0
10	SLE RA 30	11820	16	20644	0	0	0
10	SLE RA 31	33225	1031	41977	0	0	0
10	SLE RA 32	11820	16	20644	0	0	0
10	SLE RA 33	33225	1031	41977	0	0	0
10	SLE FR 1	10662	48	18662	0	0	0
10	SLE FR 2	32066	1063	39995	0	0	0
10	SLE FR 3	10662	48	18662	0	0	0
10	SLE FR 4	10818	51	18884	0	0	0
10	SLE FR 5	10968	32	19233	0	0	0
10	SLE QP 1	10662	48	18662	0	0	0
10	SLO 1	12145	111	19306	0	0	0
10	SLO 2	12145	111	19306	0	0	0
10	SLO 3	12143	-16	19303	0	0	0
10	SLO 4	12143	-16	19303	0	0	0
10	SLO 5	11109	260	18861	0	0	0
10	SLO 6	11109	260	18861	0	0	0
10	SLO 7	11104	-164	18849	0	0	0
10	SLO 8	11104	-164	18849	0	0	0
10	SLO 9	10219	260	18476	0	0	0
10	SLO 10	10219	260	18476	0	0	0
10	SLO 11	10214	-164	18464	0	0	0
10	SLO 12	10214	-164	18464	0	0	0
10	SLO 13	9180	112	18022	0	0	0
10	SLO 14	9180	112	18022	0	0	0
10	SLO 15	9178	-15	18018	0	0	0
10	SLO 16	9178	-15	18018	0	0	0
10	SLD 1	11881	106	19192	0	0	0
10	SLD 2	11881	106	19192	0	0	0
10	SLD 3	11880	-11	19189	0	0	0
10	SLD 4	11880	-11	19189	0	0	0
10	SLD 5	11030	244	18826	0	0	0
10	SLD 6	11030	244	18826	0	0	0
10	SLD 7	11025	-148	18815	0	0	0
10	SLD 8	11025	-148	18815	0	0	0
10	SLD 9	10298	244	18509	0	0	0
10	SLD 10	10298	244	18509	0	0	0
10	SLD 11	10294	-148	18498	0	0	0
10	SLD 12	10294	-148	18498	0	0	0
10	SLD 13	9444	107	18136	0	0	0
10	SLD 14	9444	107	18136	0	0	0
10	SLD 15	9442	-10	18133	0	0	0

Nodo	Cont.	Reazione a traslazione			Reazione a rotazione		
Ind.	N.br.	x	y	z	x	y	z
10	SLD 16	9442	-10	18133	0	0	0
10	SLV 1	13290	202	19804	0	0	0
10	SLV 2	13290	202	19804	0	0	0
10	SLV 3	13286	-107	19796	0	0	0
10	SLV 4	13286	-107	19796	0	0	0
10	SLV 5	11456	564	19018	0	0	0
10	SLV 6	11456	564	19018	0	0	0
10	SLV 7	11443	-468	18989	0	0	0
10	SLV 8	11443	-468	18989	0	0	0
10	SLV 9	9880	564	18336	0	0	0
10	SLV 10	9880	564	18336	0	0	0
10	SLV 11	9868	-468	18306	0	0	0
10	SLV 12	9868	-468	18306	0	0	0
10	SLV 13	8037	203	17529	0	0	0
10	SLV 14	8037	203	17529	0	0	0
10	SLV 15	8034	-106	17520	0	0	0
10	SLV 16	8034	-106	17520	0	0	0
11	SLU 1	-10662	48	18662	0	0	0
11	SLU 2	-53471	2078	61329	0	0	0
11	SLU 3	-53471	2078	61329	0	0	0
11	SLU 4	-10662	48	18662	0	0	0
11	SLU 5	-42769	1570	50662	0	0	0
11	SLU 6	-54058	2094	62195	0	0	0
11	SLU 7	-54058	2094	62195	0	0	0
11	SLU 8	-11248	63	19528	0	0	0
11	SLU 9	-43355	1586	51528	0	0	0
11	SLU 10	-11835	80	20394	0	0	0
11	SLU 11	-43942	1602	52394	0	0	0
11	SLU 12	-11835	80	20394	0	0	0
11	SLU 13	-43942	1602	52394	0	0	0
11	SLU 14	-53930	2062	62245	0	0	0
11	SLU 15	-53930	2062	62245	0	0	0
11	SLU 16	-11120	31	19579	0	0	0
11	SLU 17	-43227	1554	51579	0	0	0
11	SLU 18	-54516	2078	63112	0	0	0
11	SLU 19	-54516	2078	63111	0	0	0
11	SLU 20	-11707	47	20445	0	0	0
11	SLU 21	-43814	1570	52445	0	0	0
11	SLU 22	-12294	63	21311	0	0	0
11	SLU 23	-44401	1586	53311	0	0	0
11	SLU 24	-12294	63	21311	0	0	0
11	SLU 25	-44401	1586	53311	0	0	0
11	SLU 26	-11808	7	20954	0	0	0
11	SLU 27	-43915	1530	52954	0	0	0
11	SLU 28	-11808	7	20954	0	0	0
11	SLU 29	-43915	1530	52954	0	0	0
11	SLU 30	-12395	23	21821	0	0	0
11	SLU 31	-44502	1546	53820	0	0	0
11	SLU 32	-12395	23	21820	0	0	0
11	SLU 33	-44502	1546	53820	0	0	0
11	SLU 34	-10662	48	18662	0	0	0
11	SLU 35	-53471	2078	61329	0	0	0
11	SLU 36	-53471	2078	61329	0	0	0
11	SLU 37	-10662	48	18662	0	0	0
11	SLU 38	-42769	1570	50662	0	0	0
11	SLU 39	-54058	2094	62195	0	0	0
11	SLU 40	-54058	2094	62195	0	0	0
11	SLU 41	-11248	63	19528	0	0	0
11	SLU 42	-43355	1586	51528	0	0	0
11	SLU 43	-11835	80	20394	0	0	0
11	SLU 44	-43942	1602	52394	0	0	0
11	SLU 45	-11835	80	20394	0	0	0
11	SLU 46	-43942	1602	52394	0	0	0
11	SLU 47	-53930	2062	62245	0	0	0
11	SLU 48	-53930	2062	62245	0	0	0
11	SLU 49	-11120	31	19579	0	0	0
11	SLU 50	-43227	1554	51579	0	0	0
11	SLU 51	-54516	2078	63112	0	0	0
11	SLU 52	-54516	2078	63111	0	0	0
11	SLU 53	-11707	47	20445	0	0	0
11	SLU 54	-43814	1570	52445	0	0	0
11	SLU 55	-12294	63	21311	0	0	0
11	SLU 56	-44401	1586	53311	0	0	0
11	SLU 57	-12294	63	21311	0	0	0
11	SLU 58	-44401	1586	53311	0	0	0
11	SLU 59	-11808	7	20954	0	0	0
11	SLU 60	-43915	1530	52954	0	0	0
11	SLU 61	-11808	7	20954	0	0	0
11	SLU 62	-43915	1530	52954	0	0	0
11	SLU 63	-12395	23	21821	0	0	0
11	SLU 64	-44502	1546	53820	0	0	0
11	SLU 65	-12395	23	21820	0	0	0
11	SLU 66	-44502	1546	53820	0	0	0
11	SLU 67	-13860	62	24261	0	0	0
11	SLU 68	-56669	2093	66927	0	0	0
11	SLU 69	-56669	2093	66927	0	0	0
11	SLU 70	-13860	62	24261	0	0	0
11	SLU 71	-45967	1585	56261	0	0	0
11	SLU 72	-57256	2109	67793	0	0	0
11	SLU 73	-57256	2108	67793	0	0	0
11	SLU 74	-14447	78	25127	0	0	0
11	SLU 75	-46554	1601	57127	0	0	0
11	SLU 76	-15033	94	25993	0	0	0
11	SLU 77	-47140	1617	57993	0	0	0
11	SLU 78	-15033	94	25993	0	0	0

Nodo	Cont.	Reazione a traslazione			Reazione a rotazione		
Ind.	N.br.	x	y	z	x	y	z
11	SLU 79	-47140	1617	57993	0	0	0
11	SLU 80	-57128	2076	67844	0	0	0
11	SLU 81	-57128	2076	67844	0	0	0
11	SLU 82	-14319	46	25178	0	0	0
11	SLU 83	-46426	1568	57177	0	0	0
11	SLU 84	-57715	2092	68710	0	0	0
11	SLU 85	-57715	2092	68710	0	0	0
11	SLU 86	-14905	62	26044	0	0	0
11	SLU 87	-47012	1584	58044	0	0	0
11	SLU 88	-15492	78	26910	0	0	0
11	SLU 89	-47599	1601	58910	0	0	0
11	SLU 90	-15492	78	26910	0	0	0
11	SLU 91	-47599	1600	58910	0	0	0
11	SLU 92	-15007	22	26553	0	0	0
11	SLU 93	-47114	1544	58553	0	0	0
11	SLU 94	-15007	21	26553	0	0	0
11	SLU 95	-47114	1544	58553	0	0	0
11	SLU 96	-15593	37	27419	0	0	0
11	SLU 97	-47700	1560	59419	0	0	0
11	SLU 98	-15593	37	27419	0	0	0
11	SLU 99	-47700	1560	59419	0	0	0
11	SLU 100	-13860	62	24261	0	0	0
11	SLU 101	-56669	2093	66927	0	0	0
11	SLU 102	-56669	2093	66927	0	0	0
11	SLU 103	-13860	62	24261	0	0	0
11	SLU 104	-45967	1585	56261	0	0	0
11	SLU 105	-57256	2109	67793	0	0	0
11	SLU 106	-57256	2108	67793	0	0	0
11	SLU 107	-14447	78	25127	0	0	0
11	SLU 108	-46554	1601	57127	0	0	0
11	SLU 109	-15033	94	25993	0	0	0
11	SLU 110	-47140	1617	57993	0	0	0
11	SLU 111	-15033	94	25993	0	0	0
11	SLU 112	-47140	1617	57993	0	0	0
11	SLU 113	-57128	2076	67844	0	0	0
11	SLU 114	-57128	2076	67844	0	0	0
11	SLU 115	-14319	46	25178	0	0	0
11	SLU 116	-46426	1568	57177	0	0	0
11	SLU 117	-57715	2092	68710	0	0	0
11	SLU 118	-57715	2092	68710	0	0	0
11	SLU 119	-14905	62	26044	0	0	0
11	SLU 120	-47012	1584	58044	0	0	0
11	SLU 121	-15492	78	26910	0	0	0
11	SLU 122	-47599	1601	58910	0	0	0
11	SLU 123	-15492	78	26910	0	0	0
11	SLU 124	-47599	1600	58910	0	0	0
11	SLU 125	-15007	22	26553	0	0	0
11	SLU 126	-47114	1544	58553	0	0	0
11	SLU 127	-15007	21	26553	0	0	0
11	SLU 128	-47114	1544	58553	0	0	0
11	SLU 129	-15593	37	27419	0	0	0
11	SLU 130	-47700	1560	59419	0	0	0
11	SLU 131	-15593	37	27419	0	0	0
11	SLU 132	-47700	1560	59419	0	0	0
11	SLE RA 1	-10662	48	18662	0	0	0
11	SLE RA 2	-39201	1402	47106	0	0	0
11	SLE RA 3	-39201	1401	47106	0	0	0
11	SLE RA 4	-10662	48	18662	0	0	0
11	SLE RA 5	-32066	1063	39995	0	0	0
11	SLE RA 6	-39592	1412	47684	0	0	0
11	SLE RA 7	-39592	1412	47684	0	0	0
11	SLE RA 8	-11053	58	19240	0	0	0
11	SLE RA 9	-32457	1073	40573	0	0	0
11	SLE RA 10	-11444	69	19817	0	0	0
11	SLE RA 11	-32849	1084	41150	0	0	0
11	SLE RA 12	-11444	69	19817	0	0	0
11	SLE RA 13	-32849	1084	41150	0	0	0
11	SLE RA 14	-39507	1391	47718	0	0	0
11	SLE RA 15	-39507	1391	47718	0	0	0
11	SLE RA 16	-10967	37	19273	0	0	0
11	SLE RA 17	-32372	1052	40607	0	0	0
11	SLE RA 18	-39898	1401	48295	0	0	0
11	SLE RA 19	-39898	1401	48295	0	0	0
11	SLE RA 20	-11358	47	19851	0	0	0
11	SLE RA 21	-32763	1063	41184	0	0	0
11	SLE RA 22	-11750	58	20428	0	0	0
11	SLE RA 23	-33154	1073	41761	0	0	0
11	SLE RA 24	-11750	58	20428	0	0	0
11	SLE RA 25	-33154	1073	41761	0	0	0
11	SLE RA 26	-11426	21	20190	0	0	0
11	SLE RA 27	-32831	1036	41524	0	0	0
11	SLE RA 28	-11426	21	20190	0	0	0
11	SLE RA 29	-32831	1036	41524	0	0	0
11	SLE RA 30	-11817	31	20768	0	0	0
11	SLE RA 31	-33222	1047	42101	0	0	0
11	SLE RA 32	-11817	31	20768	0	0	0
11	SLE RA 33	-33222	1046	42101	0	0	0
11	SLE FR 1	-10662	48	18662	0	0	0
11	SLE FR 2	-32066	1063	39995	0	0	0
11	SLE FR 3	-10662	48	18662	0	0	0
11	SLE FR 4	-10818	52	18893	0	0	0
11	SLE FR 5	-10967	37	19274	0	0	0
11	SLE QP 1	-10662	48	18662	0	0	0
11	SLO 1	-9180	112	18022	0	0	0
11	SLO 2	-9180	112	18022	0	0	0

Nodo	Cont.	Reazione a traslazione			Reazione a rotazione		
Ind.	N.br.	x	y	z	x	y	z
11	SLO 3	-9178	-15	18018	0	0	0
11	SLO 4	-9178	-15	18018	0	0	0
11	SLO 5	-10219	260	18476	0	0	0
11	SLO 6	-10219	260	18476	0	0	0
11	SLO 7	-10214	-164	18464	0	0	0
11	SLO 8	-10214	-164	18464	0	0	0
11	SLO 9	-11109	260	18861	0	0	0
11	SLO 10	-11109	260	18861	0	0	0
11	SLO 11	-11104	-164	18849	0	0	0
11	SLO 12	-11104	-164	18849	0	0	0
11	SLO 13	-12145	111	19306	0	0	0
11	SLO 14	-12145	111	19306	0	0	0
11	SLO 15	-12143	-16	19303	0	0	0
11	SLO 16	-12143	-16	19303	0	0	0
11	SLD 1	-9444	107	18136	0	0	0
11	SLD 2	-9444	107	18136	0	0	0
11	SLD 3	-9442	-10	18133	0	0	0
11	SLD 4	-9442	-10	18133	0	0	0
11	SLD 5	-10298	244	18509	0	0	0
11	SLD 6	-10298	244	18509	0	0	0
11	SLD 7	-10294	-148	18498	0	0	0
11	SLD 8	-10294	-148	18498	0	0	0
11	SLD 9	-11030	244	18826	0	0	0
11	SLD 10	-11030	244	18826	0	0	0
11	SLD 11	-11025	-148	18815	0	0	0
11	SLD 12	-11025	-148	18815	0	0	0
11	SLD 13	-11881	106	19192	0	0	0
11	SLD 14	-11881	106	19192	0	0	0
11	SLD 15	-11880	-11	19189	0	0	0
11	SLD 16	-11880	-11	19189	0	0	0
11	SLV 1	-8037	203	17529	0	0	0
11	SLV 2	-8037	203	17529	0	0	0
11	SLV 3	-8034	-106	17520	0	0	0
11	SLV 4	-8034	-106	17520	0	0	0
11	SLV 5	-9880	564	18336	0	0	0
11	SLV 6	-9880	564	18336	0	0	0
11	SLV 7	-9868	-468	18306	0	0	0
11	SLV 8	-9868	-468	18306	0	0	0
11	SLV 9	-11456	564	19018	0	0	0
11	SLV 10	-11456	564	19018	0	0	0
11	SLV 11	-11443	-468	18989	0	0	0
11	SLV 12	-11443	-468	18989	0	0	0
11	SLV 13	-13290	202	19804	0	0	0
11	SLV 14	-13290	202	19804	0	0	0
11	SLV 15	-13286	-107	19796	0	0	0
11	SLV 16	-13286	-107	19796	0	0	0
12	SLU 1	10665	0	18670	0	0	0
12	SLU 2	68057	1803	77918	0	0	0
12	SLU 3	68057	1802	77918	0	0	0
12	SLU 4	10665	-1	18670	0	0	0
12	SLU 5	53709	1351	63106	0	0	0
12	SLU 6	68796	1817	78897	0	0	0
12	SLU 7	68796	1817	78897	0	0	0
12	SLU 8	11404	14	19649	0	0	0
12	SLU 9	54448	1365	64085	0	0	0
12	SLU 10	12144	29	20629	0	0	0
12	SLU 11	55188	1381	65065	0	0	0
12	SLU 12	12144	28	20629	0	0	0
12	SLU 13	55187	1380	65064	0	0	0
12	SLU 14	68351	1756	78395	0	0	0
12	SLU 15	68351	1755	78395	0	0	0
12	SLU 16	10959	-48	19147	0	0	0
12	SLU 17	54003	1304	63583	0	0	0
12	SLU 18	69090	1770	79375	0	0	0
12	SLU 19	69090	1770	79374	0	0	0
12	SLU 20	11698	-33	20127	0	0	0
12	SLU 21	54742	1319	64562	0	0	0
12	SLU 22	12438	-18	21106	0	0	0
12	SLU 23	55482	1334	65542	0	0	0
12	SLU 24	12438	-18	21106	0	0	0
12	SLU 25	55482	1334	65542	0	0	0
12	SLU 26	11400	-117	19864	0	0	0
12	SLU 27	54444	1235	64299	0	0	0
12	SLU 28	11400	-117	19864	0	0	0
12	SLU 29	54444	1235	64299	0	0	0
12	SLU 30	12140	-103	20843	0	0	0
12	SLU 31	55183	1249	65279	0	0	0
12	SLU 32	12139	-103	20843	0	0	0
12	SLU 33	55183	1249	65279	0	0	0
12	SLU 34	10665	0	18670	0	0	0
12	SLU 35	68057	1803	77918	0	0	0
12	SLU 36	68057	1802	77918	0	0	0
12	SLU 37	10665	-1	18670	0	0	0
12	SLU 38	53709	1351	63106	0	0	0
12	SLU 39	68796	1817	78897	0	0	0
12	SLU 40	68796	1817	78897	0	0	0
12	SLU 41	11404	14	19649	0	0	0
12	SLU 42	54448	1365	64085	0	0	0
12	SLU 43	12144	29	20629	0	0	0
12	SLU 44	55188	1381	65065	0	0	0
12	SLU 45	12144	28	20629	0	0	0
12	SLU 46	55187	1380	65064	0	0	0
12	SLU 47	68351	1756	78395	0	0	0
12	SLU 48	68351	1755	78395	0	0	0
12	SLU 49	10959	-48	19147	0	0	0

Nodo	Cont.	Reazione a traslazione			Reazione a rotazione		
Ind.	N.br.	x	y	z	x	y	z
12	SLU 50	54003	1304	63583	0	0	0
12	SLU 51	69090	1770	79375	0	0	0
12	SLU 52	69090	1770	79374	0	0	0
12	SLU 53	11698	-33	20127	0	0	0
12	SLU 54	54742	1319	64562	0	0	0
12	SLU 55	12438	-18	21106	0	0	0
12	SLU 56	55482	1334	65542	0	0	0
12	SLU 57	12438	-18	21106	0	0	0
12	SLU 58	55482	1334	65542	0	0	0
12	SLU 59	11400	-117	19864	0	0	0
12	SLU 60	54444	1235	64299	0	0	0
12	SLU 61	11400	-117	19864	0	0	0
12	SLU 62	54444	1235	64299	0	0	0
12	SLU 63	12140	-103	20843	0	0	0
12	SLU 64	55183	1249	65279	0	0	0
12	SLU 65	12139	-103	20843	0	0	0
12	SLU 66	55183	1249	65279	0	0	0
12	SLU 67	13864	0	24271	0	0	0
12	SLU 68	71256	1803	83519	0	0	0
12	SLU 69	71256	1802	83519	0	0	0
12	SLU 70	13864	-1	24271	0	0	0
12	SLU 71	56908	1351	68707	0	0	0
12	SLU 72	71996	1817	84498	0	0	0
12	SLU 73	71996	1817	84498	0	0	0
12	SLU 74	14604	14	25250	0	0	0
12	SLU 75	57648	1365	69686	0	0	0
12	SLU 76	15343	29	26230	0	0	0
12	SLU 77	58387	1381	70666	0	0	0
12	SLU 78	15343	28	26230	0	0	0
12	SLU 79	58387	1380	70666	0	0	0
12	SLU 80	71550	1756	83996	0	0	0
12	SLU 81	71550	1755	83996	0	0	0
12	SLU 82	14158	-48	24748	0	0	0
12	SLU 83	57202	1304	69184	0	0	0
12	SLU 84	72290	1770	84976	0	0	0
12	SLU 85	72290	1770	84975	0	0	0
12	SLU 86	14898	-33	25728	0	0	0
12	SLU 87	57942	1319	70163	0	0	0
12	SLU 88	15637	-18	26707	0	0	0
12	SLU 89	58681	1334	71143	0	0	0
12	SLU 90	15637	-18	26707	0	0	0
12	SLU 91	58681	1334	71143	0	0	0
12	SLU 92	14600	-117	25465	0	0	0
12	SLU 93	57643	1235	69900	0	0	0
12	SLU 94	14600	-117	25465	0	0	0
12	SLU 95	57643	1235	69900	0	0	0
12	SLU 96	15339	-103	26444	0	0	0
12	SLU 97	58383	1249	70880	0	0	0
12	SLU 98	15339	-103	26444	0	0	0
12	SLU 99	58383	1249	70880	0	0	0
12	SLU 100	13864	0	24271	0	0	0
12	SLU 101	71256	1803	83519	0	0	0
12	SLU 102	71256	1802	83519	0	0	0
12	SLU 103	13864	-1	24271	0	0	0
12	SLU 104	56908	1351	68707	0	0	0
12	SLU 105	71996	1817	84498	0	0	0
12	SLU 106	71996	1817	84498	0	0	0
12	SLU 107	14604	14	25250	0	0	0
12	SLU 108	57648	1365	69686	0	0	0
12	SLU 109	15343	29	26230	0	0	0
12	SLU 110	58387	1381	70666	0	0	0
12	SLU 111	15343	28	26230	0	0	0
12	SLU 112	58387	1380	70666	0	0	0
12	SLU 113	71550	1756	83996	0	0	0
12	SLU 114	71550	1755	83996	0	0	0
12	SLU 115	14158	-48	24748	0	0	0
12	SLU 116	57202	1304	69184	0	0	0
12	SLU 117	72290	1770	84976	0	0	0
12	SLU 118	72290	1770	84975	0	0	0
12	SLU 119	14898	-33	25728	0	0	0
12	SLU 120	57942	1319	70163	0	0	0
12	SLU 121	15637	-18	26707	0	0	0
12	SLU 122	58681	1334	71143	0	0	0
12	SLU 123	15637	-18	26707	0	0	0
12	SLU 124	58681	1334	71143	0	0	0
12	SLU 125	14600	-117	25465	0	0	0
12	SLU 126	57643	1235	69900	0	0	0
12	SLU 127	14600	-117	25465	0	0	0
12	SLU 128	57643	1235	69900	0	0	0
12	SLU 129	15339	-103	26444	0	0	0
12	SLU 130	58383	1249	70880	0	0	0
12	SLU 131	15339	-103	26444	0	0	0
12	SLU 132	58383	1249	70880	0	0	0
12	SLE RA 1	10665	0	18670	0	0	0
12	SLE RA 2	48926	1202	58169	0	0	0
12	SLE RA 3	48926	1201	58169	0	0	0
12	SLE RA 4	10665	-1	18670	0	0	0
12	SLE RA 5	39361	901	48294	0	0	0
12	SLE RA 6	49419	1211	58821	0	0	0
12	SLE RA 7	49419	1211	58821	0	0	0
12	SLE RA 8	11158	9	19323	0	0	0
12	SLE RA 9	39854	910	48947	0	0	0
12	SLE RA 10	11651	19	19976	0	0	0
12	SLE RA 11	40347	920	49600	0	0	0
12	SLE RA 12	11651	19	19976	0	0	0

Nodo	Cont.	Reazione a traslazione			Reazione a rotazione		
Ind.	N.br.	x	y	z	x	y	z
12	SLE RA 13	40347	920	49600	0	0	0
12	SLE RA 14	49122	1171	58487	0	0	0
12	SLE RA 15	49122	1170	58487	0	0	0
12	SLE RA 16	10861	-32	18988	0	0	0
12	SLE RA 17	39557	870	48612	0	0	0
12	SLE RA 18	49615	1180	59140	0	0	0
12	SLE RA 19	49615	1180	59140	0	0	0
12	SLE RA 20	11354	-22	19641	0	0	0
12	SLE RA 21	40050	879	49265	0	0	0
12	SLE RA 22	11847	-12	20294	0	0	0
12	SLE RA 23	40543	889	49918	0	0	0
12	SLE RA 24	11847	-12	20294	0	0	0
12	SLE RA 25	40543	889	49918	0	0	0
12	SLE RA 26	11155	-78	19466	0	0	0
12	SLE RA 27	39851	823	49090	0	0	0
12	SLE RA 28	11155	-78	19466	0	0	0
12	SLE RA 29	39851	823	49090	0	0	0
12	SLE RA 30	11648	-68	20119	0	0	0
12	SLE RA 31	40344	833	49743	0	0	0
12	SLE RA 32	11648	-69	20119	0	0	0
12	SLE RA 33	40344	833	49742	0	0	0
12	SLE FR 1	10665	0	18670	0	0	0
12	SLE FR 2	39361	901	48294	0	0	0
12	SLE FR 3	10665	0	18670	0	0	0
12	SLE FR 4	10862	4	18931	0	0	0
12	SLE FR 5	10861	-31	18989	0	0	0
12	SLE QP 1	10665	0	18670	0	0	0
12	SLO 1	12147	66	19312	0	0	0
12	SLO 2	12147	66	19312	0	0	0
12	SLO 3	12147	-66	19312	0	0	0
12	SLO 4	12147	-66	19312	0	0	0
12	SLO 5	11110	219	18863	0	0	0
12	SLO 6	11110	219	18863	0	0	0
12	SLO 7	11110	-219	18863	0	0	0
12	SLO 8	11110	-219	18863	0	0	0
12	SLO 9	10220	219	18478	0	0	0
12	SLO 10	10220	219	18478	0	0	0
12	SLO 11	10220	-219	18478	0	0	0
12	SLO 12	10220	-219	18478	0	0	0
12	SLO 13	9183	66	18028	0	0	0
12	SLO 14	9183	66	18028	0	0	0
12	SLO 15	9183	-66	18028	0	0	0
12	SLO 16	9183	-66	18028	0	0	0
12	SLD 1	11884	61	19198	0	0	0
12	SLD 2	11884	61	19198	0	0	0
12	SLD 3	11884	-61	19198	0	0	0
12	SLD 4	11884	-61	19198	0	0	0
12	SLD 5	11031	202	18829	0	0	0
12	SLD 6	11031	202	18829	0	0	0
12	SLD 7	11031	-202	18829	0	0	0
12	SLD 8	11031	-202	18829	0	0	0
12	SLD 9	10299	202	18512	0	0	0
12	SLD 10	10299	202	18512	0	0	0
12	SLD 11	10299	-202	18512	0	0	0
12	SLD 12	10299	-202	18512	0	0	0
12	SLD 13	9446	61	18142	0	0	0
12	SLD 14	9446	61	18142	0	0	0
12	SLD 15	9446	-61	18142	0	0	0
12	SLD 16	9446	-61	18142	0	0	0
12	SLV 1	13291	160	19808	0	0	0
12	SLV 2	13291	160	19808	0	0	0
12	SLV 3	13291	-160	19808	0	0	0
12	SLV 4	13291	-160	19808	0	0	0
12	SLV 5	11453	533	19012	0	0	0
12	SLV 6	11453	533	19012	0	0	0
12	SLV 7	11453	-533	19012	0	0	0
12	SLV 8	11453	-533	19012	0	0	0
12	SLV 9	9877	533	18329	0	0	0
12	SLV 10	9877	533	18329	0	0	0
12	SLV 11	9877	-533	18329	0	0	0
12	SLV 12	9877	-533	18329	0	0	0
12	SLV 13	8039	160	17533	0	0	0
12	SLV 14	8039	160	17533	0	0	0
12	SLV 15	8039	-160	17533	0	0	0
12	SLV 16	8039	-160	17533	0	0	0
13	SLU 1	-10665	0	18670	0	0	0
13	SLU 2	-68057	1803	77918	0	0	0
13	SLU 3	-68057	1802	77918	0	0	0
13	SLU 4	-10665	-1	18670	0	0	0
13	SLU 5	-53709	1351	63106	0	0	0
13	SLU 6	-68795	1812	78933	0	0	0
13	SLU 7	-68795	1812	78933	0	0	0
13	SLU 8	-11403	9	19685	0	0	0
13	SLU 9	-54447	1361	64121	0	0	0
13	SLU 10	-12142	20	20701	0	0	0
13	SLU 11	-55186	1372	65137	0	0	0
13	SLU 12	-12142	19	20701	0	0	0
13	SLU 13	-55186	1371	65137	0	0	0
13	SLU 14	-68349	1748	78455	0	0	0
13	SLU 15	-68349	1748	78455	0	0	0
13	SLU 16	-10957	-55	19207	0	0	0
13	SLU 17	-54001	1297	63643	0	0	0
13	SLU 18	-69088	1758	79471	0	0	0
13	SLU 19	-69088	1758	79471	0	0	0
13	SLU 20	-11696	-45	20223	0	0	0

Nodo	Cont.	Reazione a traslazione			Reazione a rotazione		
Ind.	N.br.	x	y	z	x	y	z
13	SLU 21	-54740	1307	64658	0	0	0
13	SLU 22	-12434	-34	21239	0	0	0
13	SLU 23	-55478	1317	65674	0	0	0
13	SLU 24	-12434	-35	21238	0	0	0
13	SLU 25	-55478	1317	65674	0	0	0
13	SLU 26	-11396	-136	20014	0	0	0
13	SLU 27	-54440	1216	64450	0	0	0
13	SLU 28	-11396	-136	20014	0	0	0
13	SLU 29	-54440	1216	64449	0	0	0
13	SLU 30	-12135	-126	21029	0	0	0
13	SLU 31	-55178	1226	65465	0	0	0
13	SLU 32	-12135	-126	21029	0	0	0
13	SLU 33	-55178	1226	65465	0	0	0
13	SLU 34	-10665	0	18670	0	0	0
13	SLU 35	-68057	1803	77918	0	0	0
13	SLU 36	-68057	1802	77918	0	0	0
13	SLU 37	-10665	-1	18670	0	0	0
13	SLU 38	-53709	1351	63106	0	0	0
13	SLU 39	-68795	1812	78933	0	0	0
13	SLU 40	-68795	1812	78933	0	0	0
13	SLU 41	-11403	9	19685	0	0	0
13	SLU 42	-54447	1361	64121	0	0	0
13	SLU 43	-12142	20	20701	0	0	0
13	SLU 44	-55186	1372	65137	0	0	0
13	SLU 45	-12142	19	20701	0	0	0
13	SLU 46	-55186	1371	65137	0	0	0
13	SLU 47	-68349	1748	78455	0	0	0
13	SLU 48	-68349	1748	78455	0	0	0
13	SLU 49	-10957	-55	19207	0	0	0
13	SLU 50	-54001	1297	63643	0	0	0
13	SLU 51	-69088	1758	79471	0	0	0
13	SLU 52	-69088	1758	79471	0	0	0
13	SLU 53	-11696	-45	20223	0	0	0
13	SLU 54	-54740	1307	64658	0	0	0
13	SLU 55	-12434	-34	21239	0	0	0
13	SLU 56	-55478	1317	65674	0	0	0
13	SLU 57	-12434	-35	21238	0	0	0
13	SLU 58	-55478	1317	65674	0	0	0
13	SLU 59	-11396	-136	20014	0	0	0
13	SLU 60	-54440	1216	64450	0	0	0
13	SLU 61	-11396	-136	20014	0	0	0
13	SLU 62	-54440	1216	64449	0	0	0
13	SLU 63	-12135	-126	21029	0	0	0
13	SLU 64	-55178	1226	65465	0	0	0
13	SLU 65	-12135	-126	21029	0	0	0
13	SLU 66	-55178	1226	65465	0	0	0
13	SLU 67	-13864	0	24271	0	0	0
13	SLU 68	-71256	1803	83519	0	0	0
13	SLU 69	-71256	1802	83519	0	0	0
13	SLU 70	-13864	-1	24271	0	0	0
13	SLU 71	-56908	1351	68707	0	0	0
13	SLU 72	-71995	1812	84534	0	0	0
13	SLU 73	-71995	1812	84534	0	0	0
13	SLU 74	-14603	9	25286	0	0	0
13	SLU 75	-57647	1361	69722	0	0	0
13	SLU 76	-15341	20	26302	0	0	0
13	SLU 77	-58385	1372	70738	0	0	0
13	SLU 78	-15341	19	26302	0	0	0
13	SLU 79	-58385	1371	70738	0	0	0
13	SLU 80	-71549	1748	84056	0	0	0
13	SLU 81	-71549	1748	84056	0	0	0
13	SLU 82	-14157	-55	24809	0	0	0
13	SLU 83	-57201	1297	69244	0	0	0
13	SLU 84	-72287	1758	85072	0	0	0
13	SLU 85	-72287	1758	85072	0	0	0
13	SLU 86	-14895	-45	25824	0	0	0
13	SLU 87	-57939	1307	70260	0	0	0
13	SLU 88	-15634	-34	26840	0	0	0
13	SLU 89	-58678	1317	71275	0	0	0
13	SLU 90	-15634	-35	26839	0	0	0
13	SLU 91	-58678	1317	71275	0	0	0
13	SLU 92	-14596	-136	25615	0	0	0
13	SLU 93	-57639	1216	70051	0	0	0
13	SLU 94	-14596	-136	25615	0	0	0
13	SLU 95	-57639	1216	70051	0	0	0
13	SLU 96	-15334	-126	26630	0	0	0
13	SLU 97	-58378	1226	71066	0	0	0
13	SLU 98	-15334	-126	26630	0	0	0
13	SLU 99	-58378	1226	71066	0	0	0
13	SLU 100	-13864	0	24271	0	0	0
13	SLU 101	-71256	1803	83519	0	0	0
13	SLU 102	-71256	1802	83519	0	0	0
13	SLU 103	-13864	-1	24271	0	0	0
13	SLU 104	-56908	1351	68707	0	0	0
13	SLU 105	-71995	1812	84534	0	0	0
13	SLU 106	-71995	1812	84534	0	0	0
13	SLU 107	-14603	9	25286	0	0	0
13	SLU 108	-57647	1361	69722	0	0	0
13	SLU 109	-15341	20	26302	0	0	0
13	SLU 110	-58385	1372	70738	0	0	0
13	SLU 111	-15341	19	26302	0	0	0
13	SLU 112	-58385	1371	70738	0	0	0
13	SLU 113	-71549	1748	84056	0	0	0
13	SLU 114	-71549	1748	84056	0	0	0
13	SLU 115	-14157	-55	24809	0	0	0

Nodo	Cont.	Reazione a traslazione			Reazione a rotazione		
Ind.	N.br.	x	y	z	x	y	z
13	SLU 116	-57201	1297	69244	0	0	0
13	SLU 117	-72287	1758	85072	0	0	0
13	SLU 118	-72287	1758	85072	0	0	0
13	SLU 119	-14895	-45	25824	0	0	0
13	SLU 120	-57939	1307	70260	0	0	0
13	SLU 121	-15634	-34	26840	0	0	0
13	SLU 122	-58678	1317	71275	0	0	0
13	SLU 123	-15634	-35	26839	0	0	0
13	SLU 124	-58678	1317	71275	0	0	0
13	SLU 125	-14596	-136	25615	0	0	0
13	SLU 126	-57639	1216	70051	0	0	0
13	SLU 127	-14596	-136	25615	0	0	0
13	SLU 128	-57639	1216	70051	0	0	0
13	SLU 129	-15334	-126	26630	0	0	0
13	SLU 130	-58378	1226	71066	0	0	0
13	SLU 131	-15334	-126	26630	0	0	0
13	SLU 132	-58378	1226	71066	0	0	0
13	SLE RA 1	-10665	0	18670	0	0	0
13	SLE RA 2	-48926	1202	58169	0	0	0
13	SLE RA 3	-48926	1201	58169	0	0	0
13	SLE RA 4	-10665	-1	18670	0	0	0
13	SLE RA 5	-39361	901	48294	0	0	0
13	SLE RA 6	-49418	1208	58846	0	0	0
13	SLE RA 7	-49418	1208	58845	0	0	0
13	SLE RA 8	-11157	6	19347	0	0	0
13	SLE RA 9	-39853	907	48971	0	0	0
13	SLE RA 10	-11650	13	20024	0	0	0
13	SLE RA 11	-40345	914	49648	0	0	0
13	SLE RA 12	-11650	13	20024	0	0	0
13	SLE RA 13	-40345	914	49648	0	0	0
13	SLE RA 14	-49121	1166	58527	0	0	0
13	SLE RA 15	-49121	1165	58527	0	0	0
13	SLE RA 16	-10860	-37	19028	0	0	0
13	SLE RA 17	-39556	865	48652	0	0	0
13	SLE RA 18	-49613	1172	59204	0	0	0
13	SLE RA 19	-49613	1172	59204	0	0	0
13	SLE RA 20	-11352	-30	19705	0	0	0
13	SLE RA 21	-40048	871	49329	0	0	0
13	SLE RA 22	-11845	-23	20382	0	0	0
13	SLE RA 23	-40540	878	50006	0	0	0
13	SLE RA 24	-11844	-23	20382	0	0	0
13	SLE RA 25	-40540	878	50006	0	0	0
13	SLE RA 26	-11152	-90	19566	0	0	0
13	SLE RA 27	-39848	811	49190	0	0	0
13	SLE RA 28	-11152	-91	19566	0	0	0
13	SLE RA 29	-39848	811	49190	0	0	0
13	SLE RA 30	-11645	-84	20243	0	0	0
13	SLE RA 31	-40341	817	49867	0	0	0
13	SLE RA 32	-11645	-84	20243	0	0	0
13	SLE RA 33	-40341	817	49867	0	0	0
13	SLE FR 1	-10665	0	18670	0	0	0
13	SLE FR 2	-39361	901	48294	0	0	0
13	SLE FR 3	-10665	0	18670	0	0	0
13	SLE FR 4	-10862	3	18941	0	0	0
13	SLE FR 5	-10860	-36	19029	0	0	0
13	SLE QP 1	-10665	0	18670	0	0	0
13	SLO 1	-9183	66	18028	0	0	0
13	SLO 2	-9183	66	18028	0	0	0
13	SLO 3	-9183	-66	18028	0	0	0
13	SLO 4	-9183	-66	18028	0	0	0
13	SLO 5	-10220	219	18478	0	0	0
13	SLO 6	-10220	219	18478	0	0	0
13	SLO 7	-10220	-219	18478	0	0	0
13	SLO 8	-10220	-219	18478	0	0	0
13	SLO 9	-11110	219	18863	0	0	0
13	SLO 10	-11110	219	18863	0	0	0
13	SLO 11	-11110	-219	18863	0	0	0
13	SLO 12	-11110	-219	18863	0	0	0
13	SLO 13	-12147	66	19312	0	0	0
13	SLO 14	-12147	66	19312	0	0	0
13	SLO 15	-12147	-66	19312	0	0	0
13	SLO 16	-12147	-66	19312	0	0	0
13	SLD 1	-9446	61	18142	0	0	0
13	SLD 2	-9446	61	18142	0	0	0
13	SLD 3	-9446	-61	18142	0	0	0
13	SLD 4	-9446	-61	18142	0	0	0
13	SLD 5	-10299	202	18512	0	0	0
13	SLD 6	-10299	202	18512	0	0	0
13	SLD 7	-10299	-202	18512	0	0	0
13	SLD 8	-10299	-202	18512	0	0	0
13	SLD 9	-11031	202	18829	0	0	0
13	SLD 10	-11031	202	18829	0	0	0
13	SLD 11	-11031	-202	18829	0	0	0
13	SLD 12	-11031	-202	18829	0	0	0
13	SLD 13	-11884	61	19198	0	0	0
13	SLD 14	-11884	61	19198	0	0	0
13	SLD 15	-11884	-61	19198	0	0	0
13	SLD 16	-11884	-61	19198	0	0	0
13	SLV 1	-8039	160	17533	0	0	0
13	SLV 2	-8039	160	17533	0	0	0
13	SLV 3	-8039	-160	17533	0	0	0
13	SLV 4	-8039	-160	17533	0	0	0
13	SLV 5	-9877	533	18329	0	0	0
13	SLV 6	-9877	533	18329	0	0	0
13	SLV 7	-9877	-533	18329	0	0	0

Nodo	Cont.	Reazione a traslazione			Reazione a rotazione		
Ind.	N.br.	x	y	z	x	y	z
13	SLV 8	-9877	-533	18329	0	0	0
13	SLV 9	-11453	533	19012	0	0	0
13	SLV 10	-11453	533	19012	0	0	0
13	SLV 11	-11453	-533	19012	0	0	0
13	SLV 12	-11453	-533	19012	0	0	0
13	SLV 13	-13291	160	19808	0	0	0
13	SLV 14	-13291	160	19808	0	0	0
13	SLV 15	-13291	-160	19808	0	0	0
13	SLV 16	-13291	-160	19808	0	0	0
14	SLU 1	10662	-48	18662	0	0	0
14	SLU 2	81954	-1177	92902	0	0	0
14	SLU 3	81956	-1168	92906	0	0	0
14	SLU 4	10666	-26	18674	0	0	0
14	SLU 5	64136	-873	74353	0	0	0
14	SLU 6	82769	-1172	93975	0	0	0
14	SLU 7	82771	-1164	93979	0	0	0
14	SLU 8	11482	-21	19746	0	0	0
14	SLU 9	64951	-868	75426	0	0	0
14	SLU 10	12292	-38	20808	0	0	0
14	SLU 11	65761	-885	76488	0	0	0
14	SLU 12	12294	-30	20813	0	0	0
14	SLU 13	65763	-877	76492	0	0	0
14	SLU 14	81967	-1166	92933	0	0	0
14	SLU 15	81969	-1158	92937	0	0	0
14	SLU 16	10680	-15	18704	0	0	0
14	SLU 17	64149	-862	74384	0	0	0
14	SLU 18	82782	-1162	94006	0	0	0
14	SLU 19	82784	-1153	94010	0	0	0
14	SLU 20	11495	-10	19777	0	0	0
14	SLU 21	64964	-857	75457	0	0	0
14	SLU 22	12305	-27	20839	0	0	0
14	SLU 23	65774	-874	76519	0	0	0
14	SLU 24	12307	-19	20843	0	0	0
14	SLU 25	65776	-866	76523	0	0	0
14	SLU 26	10694	-21	18739	0	0	0
14	SLU 27	64164	-868	74419	0	0	0
14	SLU 28	10696	-12	18744	0	0	0
14	SLU 29	64165	-859	74424	0	0	0
14	SLU 30	11510	-16	19812	0	0	0
14	SLU 31	64979	-863	75492	0	0	0
14	SLU 32	11512	-7	19817	0	0	0
14	SLU 33	64981	-854	75496	0	0	0
14	SLU 34	10662	-48	18662	0	0	0
14	SLU 35	81954	-1177	92902	0	0	0
14	SLU 36	81956	-1168	92906	0	0	0
14	SLU 37	10666	-26	18674	0	0	0
14	SLU 38	64136	-873	74353	0	0	0
14	SLU 39	82769	-1172	93975	0	0	0
14	SLU 40	82771	-1164	93979	0	0	0
14	SLU 41	11482	-21	19746	0	0	0
14	SLU 42	64951	-868	75426	0	0	0
14	SLU 43	12292	-38	20808	0	0	0
14	SLU 44	65761	-885	76488	0	0	0
14	SLU 45	12294	-30	20813	0	0	0
14	SLU 46	65763	-877	76492	0	0	0
14	SLU 47	81967	-1166	92933	0	0	0
14	SLU 48	81969	-1158	92937	0	0	0
14	SLU 49	10680	-15	18704	0	0	0
14	SLU 50	64149	-862	74384	0	0	0
14	SLU 51	82782	-1162	94006	0	0	0
14	SLU 52	82784	-1153	94010	0	0	0
14	SLU 53	11495	-10	19777	0	0	0
14	SLU 54	64964	-857	75457	0	0	0
14	SLU 55	12305	-27	20839	0	0	0
14	SLU 56	65774	-874	76519	0	0	0
14	SLU 57	12307	-19	20843	0	0	0
14	SLU 58	65776	-866	76523	0	0	0
14	SLU 59	10694	-21	18739	0	0	0
14	SLU 60	64164	-868	74419	0	0	0
14	SLU 61	10696	-12	18744	0	0	0
14	SLU 62	64165	-859	74424	0	0	0
14	SLU 63	11510	-16	19812	0	0	0
14	SLU 64	64979	-863	75492	0	0	0
14	SLU 65	11512	-7	19817	0	0	0
14	SLU 66	64981	-854	75496	0	0	0
14	SLU 67	13860	-62	24261	0	0	0
14	SLU 68	85152	-1192	98501	0	0	0
14	SLU 69	85154	-1183	98505	0	0	0
14	SLU 70	13865	-40	24272	0	0	0
14	SLU 71	67334	-887	79952	0	0	0
14	SLU 72	85968	-1187	99573	0	0	0
14	SLU 73	85970	-1178	99578	0	0	0
14	SLU 74	14680	-36	25345	0	0	0
14	SLU 75	68149	-883	81025	0	0	0
14	SLU 76	15491	-53	26407	0	0	0
14	SLU 77	68960	-900	82086	0	0	0
14	SLU 78	15493	-44	26411	0	0	0
14	SLU 79	68962	-891	82091	0	0	0
14	SLU 80	85165	-1181	98531	0	0	0
14	SLU 81	85167	-1172	98536	0	0	0
14	SLU 82	13878	-29	24303	0	0	0
14	SLU 83	67347	-876	79983	0	0	0
14	SLU 84	85981	-1176	99604	0	0	0
14	SLU 85	85983	-1167	99609	0	0	0
14	SLU 86	14693	-25	25376	0	0	0

Nodo	Cont.	Reazione a traslazione			Reazione a rotazione		
Ind.	N.br.	x	y	z	x	y	z
14	SLU 87	68162	-872	81056	0	0	0
14	SLU 88	15504	-42	26438	0	0	0
14	SLU 89	68973	-889	82117	0	0	0
14	SLU 90	15506	-33	26442	0	0	0
14	SLU 91	68975	-880	82122	0	0	0
14	SLU 92	13893	-35	24338	0	0	0
14	SLU 93	67362	-882	80018	0	0	0
14	SLU 94	13895	-26	24343	0	0	0
14	SLU 95	67364	-873	80022	0	0	0
14	SLU 96	14708	-30	25411	0	0	0
14	SLU 97	68177	-877	81091	0	0	0
14	SLU 98	14710	-21	25415	0	0	0
14	SLU 99	68179	-868	81095	0	0	0
14	SLU 100	13860	-62	24261	0	0	0
14	SLU 101	85152	-1192	98501	0	0	0
14	SLU 102	85154	-1183	98505	0	0	0
14	SLU 103	13865	-40	24272	0	0	0
14	SLU 104	67334	-887	79952	0	0	0
14	SLU 105	85968	-1187	99573	0	0	0
14	SLU 106	85970	-1178	99578	0	0	0
14	SLU 107	14680	-36	25345	0	0	0
14	SLU 108	68149	-883	81025	0	0	0
14	SLU 109	15491	-53	26407	0	0	0
14	SLU 110	68960	-900	82086	0	0	0
14	SLU 111	15493	-44	26411	0	0	0
14	SLU 112	68962	-891	82091	0	0	0
14	SLU 113	85165	-1181	98531	0	0	0
14	SLU 114	85167	-1172	98536	0	0	0
14	SLU 115	13878	-29	24303	0	0	0
14	SLU 116	67347	-876	79983	0	0	0
14	SLU 117	85981	-1176	99604	0	0	0
14	SLU 118	85983	-1167	99609	0	0	0
14	SLU 119	14693	-25	25376	0	0	0
14	SLU 120	68162	-872	81056	0	0	0
14	SLU 121	15504	-42	26438	0	0	0
14	SLU 122	68973	-889	82117	0	0	0
14	SLU 123	15506	-33	26442	0	0	0
14	SLU 124	68975	-880	82122	0	0	0
14	SLU 125	13893	-35	24338	0	0	0
14	SLU 126	67362	-882	80018	0	0	0
14	SLU 127	13895	-26	24343	0	0	0
14	SLU 128	67364	-873	80022	0	0	0
14	SLU 129	14708	-30	25411	0	0	0
14	SLU 130	68177	-877	81091	0	0	0
14	SLU 131	14710	-21	25415	0	0	0
14	SLU 132	68179	-868	81095	0	0	0
14	SLE RA 1	10662	-48	18662	0	0	0
14	SLE RA 2	58190	-801	68155	0	0	0
14	SLE RA 3	58191	-795	68158	0	0	0
14	SLE RA 4	10665	-33	18670	0	0	0
14	SLE RA 5	46311	-598	55790	0	0	0
14	SLE RA 6	58733	-798	68871	0	0	0
14	SLE RA 7	58735	-792	68874	0	0	0
14	SLE RA 8	11208	-30	19385	0	0	0
14	SLE RA 9	46854	-595	56505	0	0	0
14	SLE RA 10	11749	-42	20093	0	0	0
14	SLE RA 11	47395	-606	57213	0	0	0
14	SLE RA 12	11750	-36	20096	0	0	0
14	SLE RA 13	47396	-600	57216	0	0	0
14	SLE RA 14	58198	-794	68176	0	0	0
14	SLE RA 15	58200	-788	68179	0	0	0
14	SLE RA 16	10674	-26	18690	0	0	0
14	SLE RA 17	46320	-591	55810	0	0	0
14	SLE RA 18	58742	-790	68891	0	0	0
14	SLE RA 19	58743	-784	68894	0	0	0
14	SLE RA 20	11217	-23	19406	0	0	0
14	SLE RA 21	46863	-587	56525	0	0	0
14	SLE RA 22	11757	-34	20113	0	0	0
14	SLE RA 23	47403	-599	57233	0	0	0
14	SLE RA 24	11759	-28	20116	0	0	0
14	SLE RA 25	47405	-593	57236	0	0	0
14	SLE RA 26	10683	-30	18714	0	0	0
14	SLE RA 27	46330	-594	55833	0	0	0
14	SLE RA 28	10685	-24	18717	0	0	0
14	SLE RA 29	46331	-589	55836	0	0	0
14	SLE RA 30	11227	-27	19429	0	0	0
14	SLE RA 31	46873	-591	56549	0	0	0
14	SLE RA 32	11228	-21	19432	0	0	0
14	SLE RA 33	46874	-585	56552	0	0	0
14	SLE FR 1	10662	-48	18662	0	0	0
14	SLE FR 2	46308	-613	55782	0	0	0
14	SLE FR 3	10663	-42	18665	0	0	0
14	SLE FR 4	10879	-47	18948	0	0	0
14	SLE FR 5	10670	-41	18683	0	0	0
14	SLE QP 1	10662	-48	18662	0	0	0
14	SLO 1	12143	16	19303	0	0	0
14	SLO 2	12143	16	19303	0	0	0
14	SLO 3	12145	-111	19306	0	0	0
14	SLO 4	12145	-111	19306	0	0	0
14	SLO 5	11104	164	18849	0	0	0
14	SLO 6	11104	164	18849	0	0	0
14	SLO 7	11109	-260	18861	0	0	0
14	SLO 8	11109	-260	18861	0	0	0
14	SLO 9	10214	164	18464	0	0	0
14	SLO 10	10214	164	18464	0	0	0

Nodo	Cont.	Reazione a traslazione			Reazione a rotazione		
Ind.	N.br.	x	y	z	x	y	z
14	SLO 11	10219	-260	18476	0	0	0
14	SLO 12	10219	-260	18476	0	0	0
14	SLO 13	9178	15	18018	0	0	0
14	SLO 14	9178	15	18018	0	0	0
14	SLO 15	9180	-112	18022	0	0	0
14	SLO 16	9180	-112	18022	0	0	0
14	SLD 1	11880	11	19189	0	0	0
14	SLD 2	11880	11	19189	0	0	0
14	SLD 3	11881	-106	19192	0	0	0
14	SLD 4	11881	-106	19192	0	0	0
14	SLD 5	11025	148	18815	0	0	0
14	SLD 6	11025	148	18815	0	0	0
14	SLD 7	11030	-244	18826	0	0	0
14	SLD 8	11030	-244	18826	0	0	0
14	SLD 9	10294	148	18498	0	0	0
14	SLD 10	10294	148	18498	0	0	0
14	SLD 11	10298	-244	18509	0	0	0
14	SLD 12	10298	-244	18509	0	0	0
14	SLD 13	9442	10	18133	0	0	0
14	SLD 14	9442	10	18133	0	0	0
14	SLD 15	9444	-107	18136	0	0	0
14	SLD 16	9444	-107	18136	0	0	0
14	SLV 1	13286	107	19796	0	0	0
14	SLV 2	13286	107	19796	0	0	0
14	SLV 3	13290	-202	19804	0	0	0
14	SLV 4	13290	-202	19804	0	0	0
14	SLV 5	11443	468	18989	0	0	0
14	SLV 6	11443	468	18989	0	0	0
14	SLV 7	11456	-564	19018	0	0	0
14	SLV 8	11456	-564	19018	0	0	0
14	SLV 9	9868	468	18306	0	0	0
14	SLV 10	9868	468	18306	0	0	0
14	SLV 11	9880	-564	18336	0	0	0
14	SLV 12	9880	-564	18336	0	0	0
14	SLV 13	8034	106	17520	0	0	0
14	SLV 14	8034	106	17520	0	0	0
14	SLV 15	8037	-203	17529	0	0	0
14	SLV 16	8037	-203	17529	0	0	0
15	SLU 1	-10662	-48	18662	0	0	0
15	SLU 2	-81954	-1177	92902	0	0	0
15	SLU 3	-81956	-1168	92906	0	0	0
15	SLU 4	-10666	-26	18674	0	0	0
15	SLU 5	-64136	-873	74353	0	0	0
15	SLU 6	-82770	-1177	93977	0	0	0
15	SLU 7	-82772	-1168	93981	0	0	0
15	SLU 8	-11483	-26	19749	0	0	0
15	SLU 9	-64952	-873	75428	0	0	0
15	SLU 10	-12294	-48	20812	0	0	0
15	SLU 11	-65763	-895	76492	0	0	0
15	SLU 12	-12296	-39	20817	0	0	0
15	SLU 13	-65765	-886	76497	0	0	0
15	SLU 14	-81968	-1174	92936	0	0	0
15	SLU 15	-81970	-1165	92941	0	0	0
15	SLU 16	-10681	-23	18708	0	0	0
15	SLU 17	-64150	-870	74388	0	0	0
15	SLU 18	-82785	-1174	94011	0	0	0
15	SLU 19	-82787	-1165	94016	0	0	0
15	SLU 20	-11497	-23	19783	0	0	0
15	SLU 21	-64966	-869	75463	0	0	0
15	SLU 22	-12309	-44	20847	0	0	0
15	SLU 23	-65778	-891	76527	0	0	0
15	SLU 24	-12311	-35	20851	0	0	0
15	SLU 25	-65780	-882	76531	0	0	0
15	SLU 26	-10698	-40	18748	0	0	0
15	SLU 27	-64167	-887	74428	0	0	0
15	SLU 28	-10700	-31	18753	0	0	0
15	SLU 29	-64169	-878	74433	0	0	0
15	SLU 30	-11514	-40	19824	0	0	0
15	SLU 31	-64984	-887	75503	0	0	0
15	SLU 32	-11516	-31	19828	0	0	0
15	SLU 33	-64986	-878	75508	0	0	0
15	SLU 34	-10662	-48	18662	0	0	0
15	SLU 35	-81954	-1177	92902	0	0	0
15	SLU 36	-81956	-1168	92906	0	0	0
15	SLU 37	-10666	-26	18674	0	0	0
15	SLU 38	-64136	-873	74353	0	0	0
15	SLU 39	-82770	-1177	93977	0	0	0
15	SLU 40	-82772	-1168	93981	0	0	0
15	SLU 41	-11483	-26	19749	0	0	0
15	SLU 42	-64952	-873	75428	0	0	0
15	SLU 43	-12294	-48	20812	0	0	0
15	SLU 44	-65763	-895	76492	0	0	0
15	SLU 45	-12296	-39	20817	0	0	0
15	SLU 46	-65765	-886	76497	0	0	0
15	SLU 47	-81968	-1174	92936	0	0	0
15	SLU 48	-81970	-1165	92941	0	0	0
15	SLU 49	-10681	-23	18708	0	0	0
15	SLU 50	-64150	-870	74388	0	0	0
15	SLU 51	-82785	-1174	94011	0	0	0
15	SLU 52	-82787	-1165	94016	0	0	0
15	SLU 53	-11497	-23	19783	0	0	0
15	SLU 54	-64966	-869	75463	0	0	0
15	SLU 55	-12309	-44	20847	0	0	0
15	SLU 56	-65778	-891	76527	0	0	0
15	SLU 57	-12311	-35	20851	0	0	0

Nodo	Cont.	Reazione a traslazione			Reazione a rotazione		
Ind.	N.br.	x	y	z	x	y	z
15	SLU 58	-65780	-882	76531	0	0	0
15	SLU 59	-10698	-40	18748	0	0	0
15	SLU 60	-64167	-887	74428	0	0	0
15	SLU 61	-10700	-31	18753	0	0	0
15	SLU 62	-64169	-878	74433	0	0	0
15	SLU 63	-11514	-40	19824	0	0	0
15	SLU 64	-64984	-887	75503	0	0	0
15	SLU 65	-11516	-31	19828	0	0	0
15	SLU 66	-64986	-878	75508	0	0	0
15	SLU 67	-13860	-62	24261	0	0	0
15	SLU 68	-85152	-1192	98501	0	0	0
15	SLU 69	-85154	-1183	98505	0	0	0
15	SLU 70	-13865	-40	24272	0	0	0
15	SLU 71	-67334	-887	79952	0	0	0
15	SLU 72	-85969	-1191	99576	0	0	0
15	SLU 73	-85970	-1183	99580	0	0	0
15	SLU 74	-14681	-40	25347	0	0	0
15	SLU 75	-68150	-887	81027	0	0	0
15	SLU 76	-15492	-62	26411	0	0	0
15	SLU 77	-68962	-909	82091	0	0	0
15	SLU 78	-15494	-53	26416	0	0	0
15	SLU 79	-68964	-900	82095	0	0	0
15	SLU 80	-85167	-1188	98535	0	0	0
15	SLU 81	-85169	-1180	98540	0	0	0
15	SLU 82	-13880	-37	24307	0	0	0
15	SLU 83	-67349	-884	79986	0	0	0
15	SLU 84	-85983	-1188	99610	0	0	0
15	SLU 85	-85985	-1179	99615	0	0	0
15	SLU 86	-14696	-37	25382	0	0	0
15	SLU 87	-68165	-884	81062	0	0	0
15	SLU 88	-15507	-59	26446	0	0	0
15	SLU 89	-68976	-906	82125	0	0	0
15	SLU 90	-15509	-50	26450	0	0	0
15	SLU 91	-68978	-897	82130	0	0	0
15	SLU 92	-13897	-54	24347	0	0	0
15	SLU 93	-67366	-901	80027	0	0	0
15	SLU 94	-13899	-45	24352	0	0	0
15	SLU 95	-67368	-892	80031	0	0	0
15	SLU 96	-14713	-54	25422	0	0	0
15	SLU 97	-68182	-901	81102	0	0	0
15	SLU 98	-14715	-45	25427	0	0	0
15	SLU 99	-68184	-892	81106	0	0	0
15	SLU 100	-13860	-62	24261	0	0	0
15	SLU 101	-85152	-1192	98501	0	0	0
15	SLU 102	-85154	-1183	98505	0	0	0
15	SLU 103	-13865	-40	24272	0	0	0
15	SLU 104	-67334	-887	79952	0	0	0
15	SLU 105	-85969	-1191	99576	0	0	0
15	SLU 106	-85970	-1183	99580	0	0	0
15	SLU 107	-14681	-40	25347	0	0	0
15	SLU 108	-68150	-887	81027	0	0	0
15	SLU 109	-15492	-62	26411	0	0	0
15	SLU 110	-68962	-909	82091	0	0	0
15	SLU 111	-15494	-53	26416	0	0	0
15	SLU 112	-68964	-900	82095	0	0	0
15	SLU 113	-85167	-1188	98535	0	0	0
15	SLU 114	-85169	-1180	98540	0	0	0
15	SLU 115	-13880	-37	24307	0	0	0
15	SLU 116	-67349	-884	79986	0	0	0
15	SLU 117	-85983	-1188	99610	0	0	0
15	SLU 118	-85985	-1179	99615	0	0	0
15	SLU 119	-14696	-37	25382	0	0	0
15	SLU 120	-68165	-884	81062	0	0	0
15	SLU 121	-15507	-59	26446	0	0	0
15	SLU 122	-68976	-906	82125	0	0	0
15	SLU 123	-15509	-50	26450	0	0	0
15	SLU 124	-68978	-897	82130	0	0	0
15	SLU 125	-13897	-54	24347	0	0	0
15	SLU 126	-67366	-901	80027	0	0	0
15	SLU 127	-13899	-45	24352	0	0	0
15	SLU 128	-67368	-892	80031	0	0	0
15	SLU 129	-14713	-54	25422	0	0	0
15	SLU 130	-68182	-901	81102	0	0	0
15	SLU 131	-14715	-45	25427	0	0	0
15	SLU 132	-68184	-892	81106	0	0	0
15	SLE RA 1	-10662	-48	18662	0	0	0
15	SLE RA 2	-58190	-801	68155	0	0	0
15	SLE RA 3	-58191	-795	68158	0	0	0
15	SLE RA 4	-10665	-33	18670	0	0	0
15	SLE RA 5	-46311	-598	55790	0	0	0
15	SLE RA 6	-58734	-801	68872	0	0	0
15	SLE RA 7	-58735	-795	68875	0	0	0
15	SLE RA 8	-11209	-33	19387	0	0	0
15	SLE RA 9	-46855	-598	56506	0	0	0
15	SLE RA 10	-11750	-48	20096	0	0	0
15	SLE RA 11	-47396	-612	57215	0	0	0
15	SLE RA 12	-11751	-42	20099	0	0	0
15	SLE RA 13	-47397	-606	57219	0	0	0
15	SLE RA 14	-58200	-799	68178	0	0	0
15	SLE RA 15	-58201	-793	68181	0	0	0
15	SLE RA 16	-10675	-31	18693	0	0	0
15	SLE RA 17	-46321	-596	55813	0	0	0
15	SLE RA 18	-58744	-799	68895	0	0	0
15	SLE RA 19	-58745	-793	68898	0	0	0
15	SLE RA 20	-11219	-31	19410	0	0	0

Nodo	Cont.	Reazione a traslazione			Reazione a rotazione		
Ind.	N.br.	x	y	z	x	y	z
15	SLE RA 21	-46865	-596	56529	0	0	0
15	SLE RA 22	-11760	-45	20119	0	0	0
15	SLE RA 23	-47406	-610	57238	0	0	0
15	SLE RA 24	-11761	-40	20122	0	0	0
15	SLE RA 25	-47407	-604	57242	0	0	0
15	SLE RA 26	-10686	-43	18720	0	0	0
15	SLE RA 27	-46332	-607	55840	0	0	0
15	SLE RA 28	-10687	-37	18723	0	0	0
15	SLE RA 29	-46333	-601	55843	0	0	0
15	SLE RA 30	-11230	-42	19436	0	0	0
15	SLE RA 31	-46876	-607	56556	0	0	0
15	SLE RA 32	-11231	-37	19439	0	0	0
15	SLE RA 33	-46878	-601	56559	0	0	0
15	SLE FR 1	-10662	-48	18662	0	0	0
15	SLE FR 2	-46308	-613	55782	0	0	0
15	SLE FR 3	-10663	-42	18665	0	0	0
15	SLE FR 4	-10879	-48	18949	0	0	0
15	SLE FR 5	-10671	-46	18685	0	0	0
15	SLE QP 1	-10662	-48	18662	0	0	0
15	SLO 1	-9178	15	18018	0	0	0
15	SLO 2	-9178	15	18018	0	0	0
15	SLO 3	-9180	-112	18022	0	0	0
15	SLO 4	-9180	-112	18022	0	0	0
15	SLO 5	-10214	164	18464	0	0	0
15	SLO 6	-10214	164	18464	0	0	0
15	SLO 7	-10219	-260	18476	0	0	0
15	SLO 8	-10219	-260	18476	0	0	0
15	SLO 9	-11104	164	18849	0	0	0
15	SLO 10	-11104	164	18849	0	0	0
15	SLO 11	-11109	-260	18861	0	0	0
15	SLO 12	-11109	-260	18861	0	0	0
15	SLO 13	-12143	16	19303	0	0	0
15	SLO 14	-12143	16	19303	0	0	0
15	SLO 15	-12145	-111	19306	0	0	0
15	SLO 16	-12145	-111	19306	0	0	0
15	SLD 1	-9442	10	18133	0	0	0
15	SLD 2	-9442	10	18133	0	0	0
15	SLD 3	-9444	-107	18136	0	0	0
15	SLD 4	-9444	-107	18136	0	0	0
15	SLD 5	-10294	148	18498	0	0	0
15	SLD 6	-10294	148	18498	0	0	0
15	SLD 7	-10298	-244	18509	0	0	0
15	SLD 8	-10298	-244	18509	0	0	0
15	SLD 9	-11025	148	18815	0	0	0
15	SLD 10	-11025	148	18815	0	0	0
15	SLD 11	-11030	-244	18826	0	0	0
15	SLD 12	-11030	-244	18826	0	0	0
15	SLD 13	-11880	11	19189	0	0	0
15	SLD 14	-11880	11	19189	0	0	0
15	SLD 15	-11881	-106	19192	0	0	0
15	SLD 16	-11881	-106	19192	0	0	0
15	SLV 1	-8034	106	17520	0	0	0
15	SLV 2	-8034	106	17520	0	0	0
15	SLV 3	-8037	-203	17529	0	0	0
15	SLV 4	-8037	-203	17529	0	0	0
15	SLV 5	-9868	468	18306	0	0	0
15	SLV 6	-9868	468	18306	0	0	0
15	SLV 7	-9880	-564	18336	0	0	0
15	SLV 8	-9880	-564	18336	0	0	0
15	SLV 9	-11443	468	18989	0	0	0
15	SLV 10	-11443	468	18989	0	0	0
15	SLV 11	-11456	-564	19018	0	0	0
15	SLV 12	-11456	-564	19018	0	0	0
15	SLV 13	-13286	107	19796	0	0	0
15	SLV 14	-13286	107	19796	0	0	0
15	SLV 15	-13290	-202	19804	0	0	0
15	SLV 16	-13290	-202	19804	0	0	0
16	SLU 1	10805	839	19052	0	0	0
16	SLU 2	46759	-3221	56899	0	0	0
16	SLU 3	46949	-3165	57099	0	0	0
16	SLU 4	11279	979	19551	0	0	0
16	SLU 5	38244	-2066	47937	0	0	0
16	SLU 6	47593	-3143	58016	0	0	0
16	SLU 7	47783	-3087	58216	0	0	0
16	SLU 8	12113	1056	20668	0	0	0
16	SLU 9	39078	-1989	49054	0	0	0
16	SLU 10	12473	994	21285	0	0	0
16	SLU 11	39439	-2051	49671	0	0	0
16	SLU 12	12663	1050	21485	0	0	0
16	SLU 13	39628	-1995	49871	0	0	0
16	SLU 14	47201	-3068	57581	0	0	0
16	SLU 15	47391	-3012	57781	0	0	0
16	SLU 16	11721	1132	20233	0	0	0
16	SLU 17	38686	-1913	48619	0	0	0
16	SLU 18	48035	-2990	58698	0	0	0
16	SLU 19	48225	-2934	58898	0	0	0
16	SLU 20	12555	1209	21350	0	0	0
16	SLU 21	39520	-1836	49736	0	0	0
16	SLU 22	12915	1147	21967	0	0	0
16	SLU 23	39881	-1898	50352	0	0	0
16	SLU 24	13105	1203	22167	0	0	0
16	SLU 25	40070	-1842	50552	0	0	0
16	SLU 26	11910	1222	20756	0	0	0
16	SLU 27	38876	-1823	49142	0	0	0
16	SLU 28	12100	1278	20956	0	0	0

Nodo	Cont.	Reazione a traslazione			Reazione a rotazione		
Ind.	N.br.	x	y	z	x	y	z
16	SLU 29	39065	-1767	49342	0	0	0
16	SLU 30	12744	1299	21873	0	0	0
16	SLU 31	39710	-1746	50258	0	0	0
16	SLU 32	12934	1355	22072	0	0	0
16	SLU 33	39899	-1690	50458	0	0	0
16	SLU 34	10805	839	19052	0	0	0
16	SLU 35	46759	-3221	56899	0	0	0
16	SLU 36	46949	-3165	57099	0	0	0
16	SLU 37	11279	979	19551	0	0	0
16	SLU 38	38244	-2066	47937	0	0	0
16	SLU 39	47593	-3143	58016	0	0	0
16	SLU 40	47783	-3087	58216	0	0	0
16	SLU 41	12113	1056	20668	0	0	0
16	SLU 42	39078	-1989	49054	0	0	0
16	SLU 43	12473	994	21285	0	0	0
16	SLU 44	39439	-2051	49671	0	0	0
16	SLU 45	12663	1050	21485	0	0	0
16	SLU 46	39628	-1995	49871	0	0	0
16	SLU 47	47201	-3068	57581	0	0	0
16	SLU 48	47391	-3012	57781	0	0	0
16	SLU 49	11721	1132	20233	0	0	0
16	SLU 50	38686	-1913	48619	0	0	0
16	SLU 51	48035	-2990	58698	0	0	0
16	SLU 52	48225	-2934	58898	0	0	0
16	SLU 53	12555	1209	21350	0	0	0
16	SLU 54	39520	-1836	49736	0	0	0
16	SLU 55	12915	1147	21967	0	0	0
16	SLU 56	39881	-1898	50352	0	0	0
16	SLU 57	13105	1203	22167	0	0	0
16	SLU 58	40070	-1842	50552	0	0	0
16	SLU 59	11910	1222	20756	0	0	0
16	SLU 60	38876	-1823	49142	0	0	0
16	SLU 61	12100	1278	20956	0	0	0
16	SLU 62	39065	-1767	49342	0	0	0
16	SLU 63	12744	1299	21873	0	0	0
16	SLU 64	39710	-1746	50258	0	0	0
16	SLU 65	12934	1355	22072	0	0	0
16	SLU 66	39899	-1690	50458	0	0	0
16	SLU 67	14047	1091	24767	0	0	0
16	SLU 68	50001	-2969	62615	0	0	0
16	SLU 69	50190	-2913	62815	0	0	0
16	SLU 70	14520	1230	25267	0	0	0
16	SLU 71	41486	-1814	53653	0	0	0
16	SLU 72	50835	-2891	63732	0	0	0
16	SLU 73	51024	-2836	63931	0	0	0
16	SLU 74	15354	1308	26384	0	0	0
16	SLU 75	42320	-1737	54769	0	0	0
16	SLU 76	15715	1246	27000	0	0	0
16	SLU 77	42680	-1799	55386	0	0	0
16	SLU 78	15904	1302	27200	0	0	0
16	SLU 79	42870	-1743	55586	0	0	0
16	SLU 80	50443	-2816	63297	0	0	0
16	SLU 81	50632	-2760	63497	0	0	0
16	SLU 82	14962	1383	25949	0	0	0
16	SLU 83	41928	-1661	54334	0	0	0
16	SLU 84	51277	-2738	64413	0	0	0
16	SLU 85	51466	-2683	64613	0	0	0
16	SLU 86	15796	1461	27065	0	0	0
16	SLU 87	42762	-1584	55451	0	0	0
16	SLU 88	16157	1399	27682	0	0	0
16	SLU 89	43122	-1646	56068	0	0	0
16	SLU 90	16346	1455	27882	0	0	0
16	SLU 91	43312	-1590	56268	0	0	0
16	SLU 92	15152	1474	26471	0	0	0
16	SLU 93	42117	-1571	54857	0	0	0
16	SLU 94	15341	1529	26671	0	0	0
16	SLU 95	42307	-1515	55057	0	0	0
16	SLU 96	15986	1551	27588	0	0	0
16	SLU 97	42951	-1494	55974	0	0	0
16	SLU 98	16175	1607	27788	0	0	0
16	SLU 99	43141	-1438	56174	0	0	0
16	SLU 100	14047	1091	24767	0	0	0
16	SLU 101	50001	-2969	62615	0	0	0
16	SLU 102	50190	-2913	62815	0	0	0
16	SLU 103	14520	1230	25267	0	0	0
16	SLU 104	41486	-1814	53653	0	0	0
16	SLU 105	50835	-2891	63732	0	0	0
16	SLU 106	51024	-2836	63931	0	0	0
16	SLU 107	15354	1308	26384	0	0	0
16	SLU 108	42320	-1737	54769	0	0	0
16	SLU 109	15715	1246	27000	0	0	0
16	SLU 110	42680	-1799	55386	0	0	0
16	SLU 111	15904	1302	27200	0	0	0
16	SLU 112	42870	-1743	55586	0	0	0
16	SLU 113	50443	-2816	63297	0	0	0
16	SLU 114	50632	-2760	63497	0	0	0
16	SLU 115	14962	1383	25949	0	0	0
16	SLU 116	41928	-1661	54334	0	0	0
16	SLU 117	51277	-2738	64413	0	0	0
16	SLU 118	51466	-2683	64613	0	0	0
16	SLU 119	15796	1461	27065	0	0	0
16	SLU 120	42762	-1584	55451	0	0	0
16	SLU 121	16157	1399	27682	0	0	0
16	SLU 122	43122	-1646	56068	0	0	0
16	SLU 123	16346	1455	27882	0	0	0

Nodo	Cont.	Reazione a traslazione			Reazione a rotazione		
Ind.	N.br.	x	y	z	x	y	z
16	SLU 124	43312	-1590	56268	0	0	0
16	SLU 125	15152	1474	26471	0	0	0
16	SLU 126	42117	-1571	54857	0	0	0
16	SLU 127	15341	1529	26671	0	0	0
16	SLU 128	42307	-1515	55057	0	0	0
16	SLU 129	15986	1551	27588	0	0	0
16	SLU 130	42951	-1494	55974	0	0	0
16	SLU 131	16175	1607	27788	0	0	0
16	SLU 132	43141	-1438	56174	0	0	0
16	SLE RA 1	10805	839	19052	0	0	0
16	SLE RA 2	34774	-1867	44284	0	0	0
16	SLE RA 3	34901	-1830	44417	0	0	0
16	SLE RA 4	11121	932	19385	0	0	0
16	SLE RA 5	29098	-1098	38309	0	0	0
16	SLE RA 6	35330	-1816	45028	0	0	0
16	SLE RA 7	35457	-1779	45161	0	0	0
16	SLE RA 8	11677	984	20129	0	0	0
16	SLE RA 9	29654	-1046	39053	0	0	0
16	SLE RA 10	11917	942	20541	0	0	0
16	SLE RA 11	29894	-1087	39464	0	0	0
16	SLE RA 12	12043	980	20674	0	0	0
16	SLE RA 13	30020	-1050	39598	0	0	0
16	SLE RA 14	35069	-1765	44738	0	0	0
16	SLE RA 15	35195	-1728	44871	0	0	0
16	SLE RA 16	11416	1034	19839	0	0	0
16	SLE RA 17	29393	-996	38763	0	0	0
16	SLE RA 18	35625	-1714	45482	0	0	0
16	SLE RA 19	35751	-1676	45616	0	0	0
16	SLE RA 20	11972	1086	20584	0	0	0
16	SLE RA 21	29949	-944	39508	0	0	0
16	SLE RA 22	12212	1044	20995	0	0	0
16	SLE RA 23	30189	-985	39919	0	0	0
16	SLE RA 24	12338	1082	21128	0	0	0
16	SLE RA 25	30315	-948	40052	0	0	0
16	SLE RA 26	11542	1094	20188	0	0	0
16	SLE RA 27	29519	-936	39112	0	0	0
16	SLE RA 28	11668	1131	20321	0	0	0
16	SLE RA 29	29645	-898	39245	0	0	0
16	SLE RA 30	12098	1146	20932	0	0	0
16	SLE RA 31	30075	-884	39856	0	0	0
16	SLE RA 32	12224	1183	21066	0	0	0
16	SLE RA 33	30201	-847	39989	0	0	0
16	SLE FR 1	10805	839	19052	0	0	0
16	SLE FR 2	28782	-1191	37976	0	0	0
16	SLE FR 3	10931	876	19185	0	0	0
16	SLE FR 4	11027	860	19349	0	0	0
16	SLE FR 5	11100	941	19506	0	0	0
16	SLE QP 1	10805	839	19052	0	0	0
16	SLO 1	12279	902	19688	0	0	0
16	SLO 2	12279	902	19688	0	0	0
16	SLO 3	12285	799	19702	0	0	0
16	SLO 4	12285	799	19702	0	0	0
16	SLO 5	11238	1014	19221	0	0	0
16	SLO 6	11238	1014	19221	0	0	0
16	SLO 7	11258	671	19268	0	0	0
16	SLO 8	11258	671	19268	0	0	0
16	SLO 9	10352	1007	18835	0	0	0
16	SLO 10	10352	1007	18835	0	0	0
16	SLO 11	10372	664	18882	0	0	0
16	SLO 12	10372	664	18882	0	0	0
16	SLO 13	9325	879	18402	0	0	0
16	SLO 14	9325	879	18402	0	0	0
16	SLO 15	9331	776	18416	0	0	0
16	SLO 16	9331	776	18416	0	0	0
16	SLD 1	12017	896	19574	0	0	0
16	SLD 2	12017	896	19574	0	0	0
16	SLD 3	12023	801	19587	0	0	0
16	SLD 4	12023	801	19587	0	0	0
16	SLD 5	11160	1000	19188	0	0	0
16	SLD 6	11160	1000	19188	0	0	0
16	SLD 7	11179	684	19232	0	0	0
16	SLD 8	11179	684	19232	0	0	0
16	SLD 9	10431	995	18871	0	0	0
16	SLD 10	10431	995	18871	0	0	0
16	SLD 11	10450	678	18915	0	0	0
16	SLD 12	10450	678	18915	0	0	0
16	SLD 13	9588	877	18517	0	0	0
16	SLD 14	9588	877	18517	0	0	0
16	SLD 15	9593	782	18530	0	0	0
16	SLD 16	9593	782	18530	0	0	0
16	SLV 1	13415	985	20173	0	0	0
16	SLV 2	13415	985	20173	0	0	0
16	SLV 3	13430	735	20208	0	0	0
16	SLV 4	13430	735	20208	0	0	0
16	SLV 5	11566	1263	19336	0	0	0
16	SLV 6	11566	1263	19336	0	0	0
16	SLV 7	11615	428	19451	0	0	0
16	SLV 8	11615	428	19451	0	0	0
16	SLV 9	9995	1250	18652	0	0	0
16	SLV 10	9995	1250	18652	0	0	0
16	SLV 11	10044	415	18768	0	0	0
16	SLV 12	10044	415	18768	0	0	0
16	SLV 13	8180	944	17895	0	0	0
16	SLV 14	8180	944	17895	0	0	0
16	SLV 15	8195	693	17930	0	0	0

Nodo	Cont.	Reazione a traslazione			Reazione a rotazione		
Ind.	N.br.	x	y	z	x	y	z
16	SLV 16	8195	693	17930	0	0	0
17	SLU 1	-10805	839	19052	0	0	0
17	SLU 2	-46759	-3221	56899	0	0	0
17	SLU 3	-46949	-3165	57099	0	0	0
17	SLU 4	-11279	979	19551	0	0	0
17	SLU 5	-38244	-2066	47937	0	0	0
17	SLU 6	-47593	-3145	58014	0	0	0
17	SLU 7	-47782	-3089	58214	0	0	0
17	SLU 8	-12113	1055	20666	0	0	0
17	SLU 9	-39078	-1990	49052	0	0	0
17	SLU 10	-12473	991	21281	0	0	0
17	SLU 11	-39438	-2054	49667	0	0	0
17	SLU 12	-12662	1047	21481	0	0	0
17	SLU 13	-39628	-1998	49867	0	0	0
17	SLU 14	-47201	-3070	57578	0	0	0
17	SLU 15	-47390	-3014	57778	0	0	0
17	SLU 16	-11720	1129	20230	0	0	0
17	SLU 17	-38686	-1915	48616	0	0	0
17	SLU 18	-48034	-2994	58693	0	0	0
17	SLU 19	-48224	-2938	58893	0	0	0
17	SLU 20	-12554	1205	21345	0	0	0
17	SLU 21	-39520	-1839	49730	0	0	0
17	SLU 22	-12914	1142	21960	0	0	0
17	SLU 23	-39880	-1903	50345	0	0	0
17	SLU 24	-13104	1198	22160	0	0	0
17	SLU 25	-40069	-1847	50545	0	0	0
17	SLU 26	-11909	1216	20748	0	0	0
17	SLU 27	-38875	-1829	49134	0	0	0
17	SLU 28	-12099	1272	20948	0	0	0
17	SLU 29	-39064	-1773	49334	0	0	0
17	SLU 30	-12743	1292	21863	0	0	0
17	SLU 31	-39708	-1753	50249	0	0	0
17	SLU 32	-12932	1348	22063	0	0	0
17	SLU 33	-39898	-1697	50448	0	0	0
17	SLU 34	-10805	839	19052	0	0	0
17	SLU 35	-46759	-3221	56899	0	0	0
17	SLU 36	-46949	-3165	57099	0	0	0
17	SLU 37	-11279	979	19551	0	0	0
17	SLU 38	-38244	-2066	47937	0	0	0
17	SLU 39	-47593	-3145	58014	0	0	0
17	SLU 40	-47782	-3089	58214	0	0	0
17	SLU 41	-12113	1055	20666	0	0	0
17	SLU 42	-39078	-1990	49052	0	0	0
17	SLU 43	-12473	991	21281	0	0	0
17	SLU 44	-39438	-2054	49667	0	0	0
17	SLU 45	-12662	1047	21481	0	0	0
17	SLU 46	-39628	-1998	49867	0	0	0
17	SLU 47	-47201	-3070	57578	0	0	0
17	SLU 48	-47390	-3014	57778	0	0	0
17	SLU 49	-11720	1129	20230	0	0	0
17	SLU 50	-38686	-1915	48616	0	0	0
17	SLU 51	-48034	-2994	58693	0	0	0
17	SLU 52	-48224	-2938	58893	0	0	0
17	SLU 53	-12554	1205	21345	0	0	0
17	SLU 54	-39520	-1839	49730	0	0	0
17	SLU 55	-12914	1142	21960	0	0	0
17	SLU 56	-39880	-1903	50345	0	0	0
17	SLU 57	-13104	1198	22160	0	0	0
17	SLU 58	-40069	-1847	50545	0	0	0
17	SLU 59	-11909	1216	20748	0	0	0
17	SLU 60	-38875	-1829	49134	0	0	0
17	SLU 61	-12099	1272	20948	0	0	0
17	SLU 62	-39064	-1773	49334	0	0	0
17	SLU 63	-12743	1292	21863	0	0	0
17	SLU 64	-39708	-1753	50249	0	0	0
17	SLU 65	-12932	1348	22063	0	0	0
17	SLU 66	-39898	-1697	50448	0	0	0
17	SLU 67	-14047	1091	24767	0	0	0
17	SLU 68	-50001	-2969	62615	0	0	0
17	SLU 69	-50190	-2913	62815	0	0	0
17	SLU 70	-14520	1230	25267	0	0	0
17	SLU 71	-41486	-1814	53653	0	0	0
17	SLU 72	-50834	-2893	63730	0	0	0
17	SLU 73	-51024	-2837	63930	0	0	0
17	SLU 74	-15354	1306	26382	0	0	0
17	SLU 75	-42320	-1738	54767	0	0	0
17	SLU 76	-15714	1243	26997	0	0	0
17	SLU 77	-42680	-1802	55382	0	0	0
17	SLU 78	-15904	1299	27197	0	0	0
17	SLU 79	-42869	-1746	55582	0	0	0
17	SLU 80	-50442	-2818	63293	0	0	0
17	SLU 81	-50632	-2762	63493	0	0	0
17	SLU 82	-14962	1381	25945	0	0	0
17	SLU 83	-41927	-1664	54331	0	0	0
17	SLU 84	-51276	-2742	64408	0	0	0
17	SLU 85	-51466	-2686	64608	0	0	0
17	SLU 86	-15796	1457	27060	0	0	0
17	SLU 87	-42761	-1588	55446	0	0	0
17	SLU 88	-16156	1394	27675	0	0	0
17	SLU 89	-43121	-1651	56061	0	0	0
17	SLU 90	-16345	1449	27875	0	0	0
17	SLU 91	-43311	-1595	56261	0	0	0
17	SLU 92	-15151	1468	26464	0	0	0
17	SLU 93	-42116	-1577	54849	0	0	0
17	SLU 94	-15340	1523	26663	0	0	0

Nodo	Cont.	Reazione a traslazione			Reazione a rotazione		
Ind.	N.br.	x	y	z	x	y	z
17	SLU 95	-42306	-1521	55049	0	0	0
17	SLU 96	-15985	1544	27578	0	0	0
17	SLU 97	-42950	-1501	55964	0	0	0
17	SLU 98	-16174	1600	27778	0	0	0
17	SLU 99	-43139	-1445	56164	0	0	0
17	SLU 100	-14047	1091	24767	0	0	0
17	SLU 101	-50001	-2969	62615	0	0	0
17	SLU 102	-50190	-2913	62815	0	0	0
17	SLU 103	-14520	1230	25267	0	0	0
17	SLU 104	-41486	-1814	53653	0	0	0
17	SLU 105	-50834	-2893	63730	0	0	0
17	SLU 106	-51024	-2837	63930	0	0	0
17	SLU 107	-15354	1306	26382	0	0	0
17	SLU 108	-42320	-1738	54767	0	0	0
17	SLU 109	-15714	1243	26997	0	0	0
17	SLU 110	-42680	-1802	55382	0	0	0
17	SLU 111	-15904	1299	27197	0	0	0
17	SLU 112	-42869	-1746	55582	0	0	0
17	SLU 113	-50442	-2818	63293	0	0	0
17	SLU 114	-50632	-2762	63493	0	0	0
17	SLU 115	-14962	1381	25945	0	0	0
17	SLU 116	-41927	-1664	54331	0	0	0
17	SLU 117	-51276	-2742	64408	0	0	0
17	SLU 118	-51466	-2686	64608	0	0	0
17	SLU 119	-15796	1457	27060	0	0	0
17	SLU 120	-42761	-1588	55446	0	0	0
17	SLU 121	-16156	1394	27675	0	0	0
17	SLU 122	-43121	-1651	56061	0	0	0
17	SLU 123	-16345	1449	27875	0	0	0
17	SLU 124	-43311	-1595	56261	0	0	0
17	SLU 125	-15151	1468	26464	0	0	0
17	SLU 126	-42116	-1577	54849	0	0	0
17	SLU 127	-15340	1523	26663	0	0	0
17	SLU 128	-42306	-1521	55049	0	0	0
17	SLU 129	-15985	1544	27578	0	0	0
17	SLU 130	-42950	-1501	55964	0	0	0
17	SLU 131	-16174	1600	27778	0	0	0
17	SLU 132	-43139	-1445	56164	0	0	0
17	SLE RA 1	-10805	839	19052	0	0	0
17	SLE RA 2	-34774	-1867	44284	0	0	0
17	SLE RA 3	-34901	-1830	44417	0	0	0
17	SLE RA 4	-11121	932	19385	0	0	0
17	SLE RA 5	-29098	-1098	38309	0	0	0
17	SLE RA 6	-35330	-1817	45027	0	0	0
17	SLE RA 7	-35457	-1779	45160	0	0	0
17	SLE RA 8	-11677	983	20128	0	0	0
17	SLE RA 9	-29654	-1047	39052	0	0	0
17	SLE RA 10	-11917	941	20538	0	0	0
17	SLE RA 11	-29894	-1089	39462	0	0	0
17	SLE RA 12	-12043	978	20671	0	0	0
17	SLE RA 13	-30020	-1052	39595	0	0	0
17	SLE RA 14	-35069	-1767	44736	0	0	0
17	SLE RA 15	-35195	-1730	44869	0	0	0
17	SLE RA 16	-11415	1033	19837	0	0	0
17	SLE RA 17	-29392	-997	38761	0	0	0
17	SLE RA 18	-35625	-1716	45479	0	0	0
17	SLE RA 19	-35751	-1679	45612	0	0	0
17	SLE RA 20	-11971	1083	20580	0	0	0
17	SLE RA 21	-29948	-947	39504	0	0	0
17	SLE RA 22	-12211	1041	20990	0	0	0
17	SLE RA 23	-30188	-989	39914	0	0	0
17	SLE RA 24	-12338	1078	21124	0	0	0
17	SLE RA 25	-30315	-952	40047	0	0	0
17	SLE RA 26	-11541	1090	20183	0	0	0
17	SLE RA 27	-29518	-940	39106	0	0	0
17	SLE RA 28	-11667	1128	20316	0	0	0
17	SLE RA 29	-29644	-902	39240	0	0	0
17	SLE RA 30	-12097	1141	20926	0	0	0
17	SLE RA 31	-30074	-889	39850	0	0	0
17	SLE RA 32	-12223	1178	21059	0	0	0
17	SLE RA 33	-30200	-852	39983	0	0	0
17	SLE FR 1	-10805	839	19052	0	0	0
17	SLE FR 2	-28782	-1191	37976	0	0	0
17	SLE FR 3	-10931	876	19185	0	0	0
17	SLE FR 4	-11027	859	19349	0	0	0
17	SLE FR 5	-11100	940	19504	0	0	0
17	SLE QP 1	-10805	839	19052	0	0	0
17	SLO 1	-9325	879	18402	0	0	0
17	SLO 2	-9325	879	18402	0	0	0
17	SLO 3	-9331	776	18416	0	0	0
17	SLO 4	-9331	776	18416	0	0	0
17	SLO 5	-10352	1007	18835	0	0	0
17	SLO 6	-10352	1007	18835	0	0	0
17	SLO 7	-10372	664	18882	0	0	0
17	SLO 8	-10372	664	18882	0	0	0
17	SLO 9	-11238	1014	19221	0	0	0
17	SLO 10	-11238	1014	19221	0	0	0
17	SLO 11	-11258	671	19268	0	0	0
17	SLO 12	-11258	671	19268	0	0	0
17	SLO 13	-12279	902	19688	0	0	0
17	SLO 14	-12279	902	19688	0	0	0
17	SLO 15	-12285	799	19702	0	0	0
17	SLO 16	-12285	799	19702	0	0	0
17	SLD 1	-9588	877	18517	0	0	0
17	SLD 2	-9588	877	18517	0	0	0

Nodo	Cont.	Reazione a traslazione			Reazione a rotazione		
Ind.	N.br.	x	y	z	x	y	z
17	SLD 3	-9593	782	18530	0	0	0
17	SLD 4	-9593	782	18530	0	0	0
17	SLD 5	-10431	995	18871	0	0	0
17	SLD 6	-10431	995	18871	0	0	0
17	SLD 7	-10450	678	18915	0	0	0
17	SLD 8	-10450	678	18915	0	0	0
17	SLD 9	-11160	1000	19188	0	0	0
17	SLD 10	-11160	1000	19188	0	0	0
17	SLD 11	-11179	684	19232	0	0	0
17	SLD 12	-11179	684	19232	0	0	0
17	SLD 13	-12017	896	19574	0	0	0
17	SLD 14	-12017	896	19574	0	0	0
17	SLD 15	-12023	801	19587	0	0	0
17	SLD 16	-12023	801	19587	0	0	0
17	SLV 1	-8180	944	17895	0	0	0
17	SLV 2	-8180	944	17895	0	0	0
17	SLV 3	-8195	693	17930	0	0	0
17	SLV 4	-8195	693	17930	0	0	0
17	SLV 5	-9995	1250	18652	0	0	0
17	SLV 6	-9995	1250	18652	0	0	0
17	SLV 7	-10044	415	18768	0	0	0
17	SLV 8	-10044	415	18768	0	0	0
17	SLV 9	-11566	1263	19336	0	0	0
17	SLV 10	-11566	1263	19336	0	0	0
17	SLV 11	-11615	428	19451	0	0	0
17	SLV 12	-11615	428	19451	0	0	0
17	SLV 13	-13415	985	20173	0	0	0
17	SLV 14	-13415	985	20173	0	0	0
17	SLV 15	-13430	735	20208	0	0	0
17	SLV 16	-13430	735	20208	0	0	0
18	SLU 1	6145	571	17711	0	0	0
18	SLU 2	6576	-1459	18726	0	0	0
18	SLU 3	6619	-1416	19062	0	0	0
18	SLU 4	6253	677	18551	0	0	0
18	SLU 5	6576	-845	19312	0	0	0
18	SLU 6	6862	-1391	19757	0	0	0
18	SLU 7	6905	-1348	20093	0	0	0
18	SLU 8	6538	745	19582	0	0	0
18	SLU 9	6862	-777	20343	0	0	0
18	SLU 10	6717	707	19774	0	0	0
18	SLU 11	7040	-816	20535	0	0	0
18	SLU 12	6760	749	20110	0	0	0
18	SLU 13	7083	-773	20871	0	0	0
18	SLU 14	6981	-1354	19945	0	0	0
18	SLU 15	7024	-1312	20281	0	0	0
18	SLU 16	6657	782	19770	0	0	0
18	SLU 17	6981	-741	20531	0	0	0
18	SLU 18	7267	-1286	20976	0	0	0
18	SLU 19	7310	-1244	21312	0	0	0
18	SLU 20	6943	849	20801	0	0	0
18	SLU 21	7266	-673	21562	0	0	0
18	SLU 22	7121	811	20992	0	0	0
18	SLU 23	7445	-711	21753	0	0	0
18	SLU 24	7164	854	21328	0	0	0
18	SLU 25	7488	-669	22089	0	0	0
18	SLU 26	7157	832	20758	0	0	0
18	SLU 27	7481	-690	21519	0	0	0
18	SLU 28	7200	875	21094	0	0	0
18	SLU 29	7523	-648	21855	0	0	0
18	SLU 30	7443	900	21789	0	0	0
18	SLU 31	7766	-622	22550	0	0	0
18	SLU 32	7486	943	22125	0	0	0
18	SLU 33	7809	-580	22886	0	0	0
18	SLU 34	6145	571	17711	0	0	0
18	SLU 35	6576	-1459	18726	0	0	0
18	SLU 36	6619	-1416	19062	0	0	0
18	SLU 37	6253	677	18551	0	0	0
18	SLU 38	6576	-845	19312	0	0	0
18	SLU 39	6862	-1391	19757	0	0	0
18	SLU 40	6905	-1348	20093	0	0	0
18	SLU 41	6538	745	19582	0	0	0
18	SLU 42	6862	-777	20343	0	0	0
18	SLU 43	6717	707	19774	0	0	0
18	SLU 44	7040	-816	20535	0	0	0
18	SLU 45	6760	749	20110	0	0	0
18	SLU 46	7083	-773	20871	0	0	0
18	SLU 47	6981	-1354	19945	0	0	0
18	SLU 48	7024	-1312	20281	0	0	0
18	SLU 49	6657	782	19770	0	0	0
18	SLU 50	6981	-741	20531	0	0	0
18	SLU 51	7267	-1286	20976	0	0	0
18	SLU 52	7310	-1244	21312	0	0	0
18	SLU 53	6943	849	20801	0	0	0
18	SLU 54	7266	-673	21562	0	0	0
18	SLU 55	7121	811	20992	0	0	0
18	SLU 56	7445	-711	21753	0	0	0
18	SLU 57	7164	854	21328	0	0	0
18	SLU 58	7488	-669	22089	0	0	0
18	SLU 59	7157	832	20758	0	0	0
18	SLU 60	7481	-690	21519	0	0	0
18	SLU 61	7200	875	21094	0	0	0
18	SLU 62	7523	-648	21855	0	0	0
18	SLU 63	7443	900	21789	0	0	0
18	SLU 64	7766	-622	22550	0	0	0
18	SLU 65	7486	943	22125	0	0	0

Nodo	Cont.	Reazione a traslazione			Reazione a rotazione		
Ind.	N.br.	x	y	z	x	y	z
18	SLU 66	7809	-580	22886	0	0	0
18	SLU 67	7989	743	23025	0	0	0
18	SLU 68	8420	-1287	24040	0	0	0
18	SLU 69	8463	-1245	24376	0	0	0
18	SLU 70	8096	849	23865	0	0	0
18	SLU 71	8419	-674	24626	0	0	0
18	SLU 72	8706	-1219	25071	0	0	0
18	SLU 73	8749	-1177	25407	0	0	0
18	SLU 74	8382	916	24896	0	0	0
18	SLU 75	8705	-606	25657	0	0	0
18	SLU 76	8560	878	25087	0	0	0
18	SLU 77	8884	-644	25848	0	0	0
18	SLU 78	8603	920	25423	0	0	0
18	SLU 79	8927	-602	26184	0	0	0
18	SLU 80	8825	-1183	25258	0	0	0
18	SLU 81	8868	-1140	25594	0	0	0
18	SLU 82	8501	953	25083	0	0	0
18	SLU 83	8824	-569	25844	0	0	0
18	SLU 84	9111	-1115	26289	0	0	0
18	SLU 85	9153	-1073	26625	0	0	0
18	SLU 86	8787	1021	26114	0	0	0
18	SLU 87	9110	-502	26875	0	0	0
18	SLU 88	8965	983	26306	0	0	0
18	SLU 89	9288	-540	27067	0	0	0
18	SLU 90	9008	1025	26641	0	0	0
18	SLU 91	9331	-497	27403	0	0	0
18	SLU 92	9001	1004	26071	0	0	0
18	SLU 93	9324	-519	26832	0	0	0
18	SLU 94	9044	1046	26407	0	0	0
18	SLU 95	9367	-476	27168	0	0	0
18	SLU 96	9287	1071	27102	0	0	0
18	SLU 97	9610	-451	27863	0	0	0
18	SLU 98	9329	1114	27438	0	0	0
18	SLU 99	9653	-408	28199	0	0	0
18	SLU 100	7989	743	23025	0	0	0
18	SLU 101	8420	-1287	24040	0	0	0
18	SLU 102	8463	-1245	24376	0	0	0
18	SLU 103	8096	849	23865	0	0	0
18	SLU 104	8419	-674	24626	0	0	0
18	SLU 105	8706	-1219	25071	0	0	0
18	SLU 106	8749	-1177	25407	0	0	0
18	SLU 107	8382	916	24896	0	0	0
18	SLU 108	8705	-606	25657	0	0	0
18	SLU 109	8560	878	25087	0	0	0
18	SLU 110	8884	-644	25848	0	0	0
18	SLU 111	8603	920	25423	0	0	0
18	SLU 112	8927	-602	26184	0	0	0
18	SLU 113	8825	-1183	25258	0	0	0
18	SLU 114	8868	-1140	25594	0	0	0
18	SLU 115	8501	953	25083	0	0	0
18	SLU 116	8824	-569	25844	0	0	0
18	SLU 117	9111	-1115	26289	0	0	0
18	SLU 118	9153	-1073	26625	0	0	0
18	SLU 119	8787	1021	26114	0	0	0
18	SLU 120	9110	-502	26875	0	0	0
18	SLU 121	8965	983	26306	0	0	0
18	SLU 122	9288	-540	27067	0	0	0
18	SLU 123	9008	1025	26641	0	0	0
18	SLU 124	9331	-497	27403	0	0	0
18	SLU 125	9001	1004	26071	0	0	0
18	SLU 126	9324	-519	26832	0	0	0
18	SLU 127	9044	1046	26407	0	0	0
18	SLU 128	9367	-476	27168	0	0	0
18	SLU 129	9287	1071	27102	0	0	0
18	SLU 130	9610	-451	27863	0	0	0
18	SLU 131	9329	1114	27438	0	0	0
18	SLU 132	9653	-408	28199	0	0	0
18	SLE RA 1	6145	571	17711	0	0	0
18	SLE RA 2	6433	-782	18388	0	0	0
18	SLE RA 3	6461	-754	18612	0	0	0
18	SLE RA 4	6217	642	18271	0	0	0
18	SLE RA 5	6432	-373	18779	0	0	0
18	SLE RA 6	6623	-737	19075	0	0	0
18	SLE RA 7	6652	-709	19299	0	0	0
18	SLE RA 8	6407	687	18959	0	0	0
18	SLE RA 9	6623	-328	19466	0	0	0
18	SLE RA 10	6526	662	19086	0	0	0
18	SLE RA 11	6742	-353	19594	0	0	0
18	SLE RA 12	6555	690	19310	0	0	0
18	SLE RA 13	6770	-325	19818	0	0	0
18	SLE RA 14	6703	-712	19200	0	0	0
18	SLE RA 15	6731	-684	19424	0	0	0
18	SLE RA 16	6487	711	19084	0	0	0
18	SLE RA 17	6702	-303	19591	0	0	0
18	SLE RA 18	6893	-667	19888	0	0	0
18	SLE RA 19	6922	-639	20112	0	0	0
18	SLE RA 20	6677	757	19771	0	0	0
18	SLE RA 21	6893	-258	20278	0	0	0
18	SLE RA 22	6796	731	19899	0	0	0
18	SLE RA 23	7012	-284	20406	0	0	0
18	SLE RA 24	6825	759	20122	0	0	0
18	SLE RA 25	7040	-255	20630	0	0	0
18	SLE RA 26	6820	745	19742	0	0	0
18	SLE RA 27	7035	-270	20250	0	0	0
18	SLE RA 28	6848	774	19966	0	0	0

Nodo	Cont.	Reazione a traslazione			Reazione a rotazione		
Ind.	N.br.	x	y	z	x	y	z
18	SLE RA 29	7064	-241	20474	0	0	0
18	SLE RA 30	7010	790	20430	0	0	0
18	SLE RA 31	7226	-224	20937	0	0	0
18	SLE RA 32	7039	819	20654	0	0	0
18	SLE RA 33	7255	-196	21161	0	0	0
18	SLE FR 1	6145	571	17711	0	0	0
18	SLE FR 2	6361	-444	18219	0	0	0
18	SLE FR 3	6174	599	17935	0	0	0
18	SLE FR 4	6222	589	17986	0	0	0
18	SLE FR 5	6415	641	18524	0	0	0
18	SLE QP 1	6145	571	17711	0	0	0
18	SLO 1	7721	657	18422	0	0	0
18	SLO 2	7721	657	18422	0	0	0
18	SLO 3	7726	507	18434	0	0	0
18	SLO 4	7726	507	18434	0	0	0
18	SLO 5	6610	825	17906	0	0	0
18	SLO 6	6610	825	17906	0	0	0
18	SLO 7	6627	324	17947	0	0	0
18	SLO 8	6627	324	17947	0	0	0
18	SLO 9	5663	818	17476	0	0	0
18	SLO 10	5663	818	17476	0	0	0
18	SLO 11	5680	318	17517	0	0	0
18	SLO 12	5680	318	17517	0	0	0
18	SLO 13	4565	635	16988	0	0	0
18	SLO 14	4565	635	16988	0	0	0
18	SLO 15	4570	485	17001	0	0	0
18	SLO 16	4570	485	17001	0	0	0
18	SLD 1	7438	650	18294	0	0	0
18	SLD 2	7438	650	18294	0	0	0
18	SLD 3	7443	511	18305	0	0	0
18	SLD 4	7443	511	18305	0	0	0
18	SLD 5	6526	805	17869	0	0	0
18	SLD 6	6526	805	17869	0	0	0
18	SLD 7	6542	343	17907	0	0	0
18	SLD 8	6542	343	17907	0	0	0
18	SLD 9	5749	800	17516	0	0	0
18	SLD 10	5749	800	17516	0	0	0
18	SLD 11	5765	337	17554	0	0	0
18	SLD 12	5765	337	17554	0	0	0
18	SLD 13	4848	631	17118	0	0	0
18	SLD 14	4848	631	17118	0	0	0
18	SLD 15	4853	493	17129	0	0	0
18	SLD 16	4853	493	17129	0	0	0
18	SLV 1	9032	774	19011	0	0	0
18	SLV 2	9032	774	19011	0	0	0
18	SLV 3	9044	408	19040	0	0	0
18	SLV 4	9044	408	19040	0	0	0
18	SLV 5	6992	1187	18056	0	0	0
18	SLV 6	6992	1187	18056	0	0	0
18	SLV 7	7034	-32	18155	0	0	0
18	SLV 8	7034	-32	18155	0	0	0
18	SLV 9	5257	1175	17268	0	0	0
18	SLV 10	5257	1175	17268	0	0	0
18	SLV 11	5298	-44	17366	0	0	0
18	SLV 12	5298	-44	17366	0	0	0
18	SLV 13	3246	734	16383	0	0	0
18	SLV 14	3246	734	16383	0	0	0
18	SLV 15	3259	368	16412	0	0	0
18	SLV 16	3259	368	16412	0	0	0
19	SLU 1	-6145	571	17711	0	0	0
19	SLU 2	-6576	-1459	18726	0	0	0
19	SLU 3	-6619	-1416	19062	0	0	0
19	SLU 4	-6253	677	18551	0	0	0
19	SLU 5	-6576	-845	19312	0	0	0
19	SLU 6	-6863	-1391	19750	0	0	0
19	SLU 7	-6906	-1348	20086	0	0	0
19	SLU 8	-6539	745	19575	0	0	0
19	SLU 9	-6862	-777	20336	0	0	0
19	SLU 10	-6718	707	19759	0	0	0
19	SLU 11	-7041	-816	20520	0	0	0
19	SLU 12	-6761	749	20095	0	0	0
19	SLU 13	-7084	-773	20856	0	0	0
19	SLU 14	-6982	-1354	19932	0	0	0
19	SLU 15	-7025	-1312	20268	0	0	0
19	SLU 16	-6658	781	19757	0	0	0
19	SLU 17	-6981	-741	20518	0	0	0
19	SLU 18	-7268	-1287	20956	0	0	0
19	SLU 19	-7311	-1244	21292	0	0	0
19	SLU 20	-6944	849	20781	0	0	0
19	SLU 21	-7268	-673	21542	0	0	0
19	SLU 22	-7123	811	20965	0	0	0
19	SLU 23	-7447	-711	21726	0	0	0
19	SLU 24	-7166	853	21301	0	0	0
19	SLU 25	-7490	-669	22062	0	0	0
19	SLU 26	-7159	832	20727	0	0	0
19	SLU 27	-7483	-690	21488	0	0	0
19	SLU 28	-7202	874	21063	0	0	0
19	SLU 29	-7526	-648	21824	0	0	0
19	SLU 30	-7446	900	21750	0	0	0
19	SLU 31	-7769	-623	22512	0	0	0
19	SLU 32	-7489	942	22086	0	0	0
19	SLU 33	-7812	-580	22847	0	0	0
19	SLU 34	-6145	571	17711	0	0	0
19	SLU 35	-6576	-1459	18726	0	0	0
19	SLU 36	-6619	-1416	19062	0	0	0

Nodo	Cont.	Reazione a traslazione			Reazione a rotazione		
Ind.	N.br.	x	y	z	x	y	z
19	SLU 37	-6253	677	18551	0	0	0
19	SLU 38	-6576	-845	19312	0	0	0
19	SLU 39	-6863	-1391	19750	0	0	0
19	SLU 40	-6906	-1348	20086	0	0	0
19	SLU 41	-6539	745	19575	0	0	0
19	SLU 42	-6862	-777	20336	0	0	0
19	SLU 43	-6718	707	19759	0	0	0
19	SLU 44	-7041	-816	20520	0	0	0
19	SLU 45	-6761	749	20095	0	0	0
19	SLU 46	-7084	-773	20856	0	0	0
19	SLU 47	-6982	-1354	19932	0	0	0
19	SLU 48	-7025	-1312	20268	0	0	0
19	SLU 49	-6658	781	19757	0	0	0
19	SLU 50	-6981	-741	20518	0	0	0
19	SLU 51	-7268	-1287	20956	0	0	0
19	SLU 52	-7311	-1244	21292	0	0	0
19	SLU 53	-6944	849	20781	0	0	0
19	SLU 54	-7268	-673	21542	0	0	0
19	SLU 55	-7123	811	20965	0	0	0
19	SLU 56	-7447	-711	21726	0	0	0
19	SLU 57	-7166	853	21301	0	0	0
19	SLU 58	-7490	-669	22062	0	0	0
19	SLU 59	-7159	832	20727	0	0	0
19	SLU 60	-7483	-690	21488	0	0	0
19	SLU 61	-7202	874	21063	0	0	0
19	SLU 62	-7526	-648	21824	0	0	0
19	SLU 63	-7446	900	21750	0	0	0
19	SLU 64	-7769	-623	22512	0	0	0
19	SLU 65	-7489	942	22086	0	0	0
19	SLU 66	-7812	-580	22847	0	0	0
19	SLU 67	-7989	743	23025	0	0	0
19	SLU 68	-8420	-1287	24040	0	0	0
19	SLU 69	-8463	-1245	24376	0	0	0
19	SLU 70	-8096	849	23865	0	0	0
19	SLU 71	-8419	-674	24626	0	0	0
19	SLU 72	-8706	-1220	25063	0	0	0
19	SLU 73	-8749	-1177	25399	0	0	0
19	SLU 74	-8382	916	24888	0	0	0
19	SLU 75	-8706	-606	25649	0	0	0
19	SLU 76	-8561	878	25072	0	0	0
19	SLU 77	-8885	-644	25833	0	0	0
19	SLU 78	-8604	920	25408	0	0	0
19	SLU 79	-8928	-602	26169	0	0	0
19	SLU 80	-8826	-1183	25246	0	0	0
19	SLU 81	-8869	-1141	25582	0	0	0
19	SLU 82	-8502	953	25071	0	0	0
19	SLU 83	-8825	-569	25832	0	0	0
19	SLU 84	-9112	-1115	26270	0	0	0
19	SLU 85	-9155	-1073	26605	0	0	0
19	SLU 86	-8788	1021	26094	0	0	0
19	SLU 87	-9111	-502	26856	0	0	0
19	SLU 88	-8967	982	26278	0	0	0
19	SLU 89	-9290	-540	27039	0	0	0
19	SLU 90	-9010	1025	26614	0	0	0
19	SLU 91	-9333	-498	27375	0	0	0
19	SLU 92	-9003	1003	26040	0	0	0
19	SLU 93	-9326	-519	26801	0	0	0
19	SLU 94	-9046	1046	26376	0	0	0
19	SLU 95	-9369	-477	27137	0	0	0
19	SLU 96	-9289	1071	27064	0	0	0
19	SLU 97	-9613	-451	27825	0	0	0
19	SLU 98	-9332	1113	27400	0	0	0
19	SLU 99	-9656	-409	28161	0	0	0
19	SLU 100	-7989	743	23025	0	0	0
19	SLU 101	-8420	-1287	24040	0	0	0
19	SLU 102	-8463	-1245	24376	0	0	0
19	SLU 103	-8096	849	23865	0	0	0
19	SLU 104	-8419	-674	24626	0	0	0
19	SLU 105	-8706	-1220	25063	0	0	0
19	SLU 106	-8749	-1177	25399	0	0	0
19	SLU 107	-8382	916	24888	0	0	0
19	SLU 108	-8706	-606	25649	0	0	0
19	SLU 109	-8561	878	25072	0	0	0
19	SLU 110	-8885	-644	25833	0	0	0
19	SLU 111	-8604	920	25408	0	0	0
19	SLU 112	-8928	-602	26169	0	0	0
19	SLU 113	-8826	-1183	25246	0	0	0
19	SLU 114	-8869	-1141	25582	0	0	0
19	SLU 115	-8502	953	25071	0	0	0
19	SLU 116	-8825	-569	25832	0	0	0
19	SLU 117	-9112	-1115	26270	0	0	0
19	SLU 118	-9155	-1073	26605	0	0	0
19	SLU 119	-8788	1021	26094	0	0	0
19	SLU 120	-9111	-502	26856	0	0	0
19	SLU 121	-8967	982	26278	0	0	0
19	SLU 122	-9290	-540	27039	0	0	0
19	SLU 123	-9010	1025	26614	0	0	0
19	SLU 124	-9333	-498	27375	0	0	0
19	SLU 125	-9003	1003	26040	0	0	0
19	SLU 126	-9326	-519	26801	0	0	0
19	SLU 127	-9046	1046	26376	0	0	0
19	SLU 128	-9369	-477	27137	0	0	0
19	SLU 129	-9289	1071	27064	0	0	0
19	SLU 130	-9613	-451	27825	0	0	0
19	SLU 131	-9332	1113	27400	0	0	0

Nodo	Cont.	Reazione a traslazione			Reazione a rotazione		
Ind.	N.br.	x	y	z	x	y	z
19	SLU 132	-9656	-409	28161	0	0	0
19	SLE RA 1	-6145	571	17711	0	0	0
19	SLE RA 2	-6433	-782	18388	0	0	0
19	SLE RA 3	-6461	-754	18612	0	0	0
19	SLE RA 4	-6217	642	18271	0	0	0
19	SLE RA 5	-6432	-373	18779	0	0	0
19	SLE RA 6	-6624	-737	19070	0	0	0
19	SLE RA 7	-6652	-709	19294	0	0	0
19	SLE RA 8	-6408	687	18954	0	0	0
19	SLE RA 9	-6623	-328	19461	0	0	0
19	SLE RA 10	-6527	661	19076	0	0	0
19	SLE RA 11	-6743	-353	19584	0	0	0
19	SLE RA 12	-6556	690	19300	0	0	0
19	SLE RA 13	-6771	-325	19808	0	0	0
19	SLE RA 14	-6703	-712	19192	0	0	0
19	SLE RA 15	-6732	-684	19416	0	0	0
19	SLE RA 16	-6487	711	19075	0	0	0
19	SLE RA 17	-6703	-303	19583	0	0	0
19	SLE RA 18	-6894	-667	19875	0	0	0
19	SLE RA 19	-6923	-639	20098	0	0	0
19	SLE RA 20	-6678	757	19758	0	0	0
19	SLE RA 21	-6894	-258	20265	0	0	0
19	SLE RA 22	-6797	731	19880	0	0	0
19	SLE RA 23	-7013	-284	20388	0	0	0
19	SLE RA 24	-6826	759	20104	0	0	0
19	SLE RA 25	-7042	-256	20612	0	0	0
19	SLE RA 26	-6821	745	19722	0	0	0
19	SLE RA 27	-7037	-270	20229	0	0	0
19	SLE RA 28	-6850	773	19946	0	0	0
19	SLE RA 29	-7066	-242	20453	0	0	0
19	SLE RA 30	-7012	790	20404	0	0	0
19	SLE RA 31	-7228	-225	20912	0	0	0
19	SLE RA 32	-7041	818	20628	0	0	0
19	SLE RA 33	-7256	-196	21135	0	0	0
19	SLE FR 1	-6145	571	17711	0	0	0
19	SLE FR 2	-6361	-444	18219	0	0	0
19	SLE FR 3	-6174	599	17935	0	0	0
19	SLE FR 4	-6222	589	17984	0	0	0
19	SLE FR 5	-6416	641	18515	0	0	0
19	SLE QP 1	-6145	571	17711	0	0	0
19	SLO 1	-4565	635	16988	0	0	0
19	SLO 2	-4565	635	16988	0	0	0
19	SLO 3	-4570	485	17001	0	0	0
19	SLO 4	-4570	485	17001	0	0	0
19	SLO 5	-5663	818	17476	0	0	0
19	SLO 6	-5663	818	17476	0	0	0
19	SLO 7	-5680	318	17517	0	0	0
19	SLO 8	-5680	318	17517	0	0	0
19	SLO 9	-6610	825	17906	0	0	0
19	SLO 10	-6610	825	17906	0	0	0
19	SLO 11	-6627	324	17947	0	0	0
19	SLO 12	-6627	324	17947	0	0	0
19	SLO 13	-7721	657	18422	0	0	0
19	SLO 14	-7721	657	18422	0	0	0
19	SLO 15	-7726	507	18434	0	0	0
19	SLO 16	-7726	507	18434	0	0	0
19	SLD 1	-4848	631	17118	0	0	0
19	SLD 2	-4848	631	17118	0	0	0
19	SLD 3	-4853	493	17129	0	0	0
19	SLD 4	-4853	493	17129	0	0	0
19	SLD 5	-5749	800	17516	0	0	0
19	SLD 6	-5749	800	17516	0	0	0
19	SLD 7	-5765	337	17554	0	0	0
19	SLD 8	-5765	337	17554	0	0	0
19	SLD 9	-6526	805	17869	0	0	0
19	SLD 10	-6526	805	17869	0	0	0
19	SLD 11	-6542	343	17907	0	0	0
19	SLD 12	-6542	343	17907	0	0	0
19	SLD 13	-7438	650	18294	0	0	0
19	SLD 14	-7438	650	18294	0	0	0
19	SLD 15	-7443	511	18305	0	0	0
19	SLD 16	-7443	511	18305	0	0	0
19	SLV 1	-3246	734	16383	0	0	0
19	SLV 2	-3246	734	16383	0	0	0
19	SLV 3	-3259	368	16412	0	0	0
19	SLV 4	-3259	368	16412	0	0	0
19	SLV 5	-5257	1175	17268	0	0	0
19	SLV 6	-5257	1175	17268	0	0	0
19	SLV 7	-5298	-44	17366	0	0	0
19	SLV 8	-5298	-44	17366	0	0	0
19	SLV 9	-6992	1187	18056	0	0	0
19	SLV 10	-6992	1187	18056	0	0	0
19	SLV 11	-7034	-32	18155	0	0	0
19	SLV 12	-7034	-32	18155	0	0	0
19	SLV 13	-9032	774	19011	0	0	0
19	SLV 14	-9032	774	19011	0	0	0
19	SLV 15	-9044	408	19040	0	0	0
19	SLV 16	-9044	408	19040	0	0	0
20	SLU 1	6275	-994	18018	0	0	0
20	SLU 2	6275	-995	18018	0	0	0
20	SLU 3	6321	-1037	18361	0	0	0
20	SLU 4	6390	-1101	18875	0	0	0
20	SLU 5	6390	-1102	18876	0	0	0
20	SLU 6	6562	-1101	19049	0	0	0
20	SLU 7	6608	-1144	19392	0	0	0

Nodo	Cont.	Reazione a traslazione			Reazione a rotazione		
Ind.	N.br.	x	y	z	x	y	z
20	SLU 8	6677	-1208	19906	0	0	0
20	SLU 9	6677	-1208	19906	0	0	0
20	SLU 10	6849	-1207	20079	0	0	0
20	SLU 11	6849	-1207	20079	0	0	0
20	SLU 12	6895	-1250	20422	0	0	0
20	SLU 13	6895	-1250	20422	0	0	0
20	SLU 14	6688	-1111	19251	0	0	0
20	SLU 15	6734	-1154	19594	0	0	0
20	SLU 16	6803	-1218	20109	0	0	0
20	SLU 17	6803	-1218	20109	0	0	0
20	SLU 18	6975	-1217	20282	0	0	0
20	SLU 19	7021	-1260	20625	0	0	0
20	SLU 20	7090	-1324	21139	0	0	0
20	SLU 21	7090	-1324	21139	0	0	0
20	SLU 22	7262	-1323	21313	0	0	0
20	SLU 23	7262	-1323	21313	0	0	0
20	SLU 24	7308	-1366	21656	0	0	0
20	SLU 25	7308	-1366	21656	0	0	0
20	SLU 26	7308	-1285	21101	0	0	0
20	SLU 27	7308	-1285	21101	0	0	0
20	SLU 28	7354	-1328	21444	0	0	0
20	SLU 29	7354	-1328	21444	0	0	0
20	SLU 30	7595	-1392	22132	0	0	0
20	SLU 31	7595	-1392	22132	0	0	0
20	SLU 32	7641	-1434	22475	0	0	0
20	SLU 33	7641	-1435	22475	0	0	0
20	SLU 34	6275	-994	18018	0	0	0
20	SLU 35	6275	-995	18018	0	0	0
20	SLU 36	6321	-1037	18361	0	0	0
20	SLU 37	6390	-1101	18875	0	0	0
20	SLU 38	6390	-1102	18876	0	0	0
20	SLU 39	6562	-1101	19049	0	0	0
20	SLU 40	6608	-1144	19392	0	0	0
20	SLU 41	6677	-1208	19906	0	0	0
20	SLU 42	6677	-1208	19906	0	0	0
20	SLU 43	6849	-1207	20079	0	0	0
20	SLU 44	6849	-1207	20079	0	0	0
20	SLU 45	6895	-1250	20422	0	0	0
20	SLU 46	6895	-1250	20422	0	0	0
20	SLU 47	6688	-1111	19251	0	0	0
20	SLU 48	6734	-1154	19594	0	0	0
20	SLU 49	6803	-1218	20109	0	0	0
20	SLU 50	6803	-1218	20109	0	0	0
20	SLU 51	6975	-1217	20282	0	0	0
20	SLU 52	7021	-1260	20625	0	0	0
20	SLU 53	7090	-1324	21139	0	0	0
20	SLU 54	7090	-1324	21139	0	0	0
20	SLU 55	7262	-1323	21313	0	0	0
20	SLU 56	7262	-1323	21313	0	0	0
20	SLU 57	7308	-1366	21656	0	0	0
20	SLU 58	7308	-1366	21656	0	0	0
20	SLU 59	7308	-1285	21101	0	0	0
20	SLU 60	7308	-1285	21101	0	0	0
20	SLU 61	7354	-1328	21444	0	0	0
20	SLU 62	7354	-1328	21444	0	0	0
20	SLU 63	7595	-1392	22132	0	0	0
20	SLU 64	7595	-1392	22132	0	0	0
20	SLU 65	7641	-1434	22475	0	0	0
20	SLU 66	7641	-1435	22475	0	0	0
20	SLU 67	8158	-1293	23423	0	0	0
20	SLU 68	8158	-1293	23423	0	0	0
20	SLU 69	8204	-1336	23766	0	0	0
20	SLU 70	8272	-1400	24281	0	0	0
20	SLU 71	8272	-1400	24281	0	0	0
20	SLU 72	8445	-1399	24454	0	0	0
20	SLU 73	8490	-1442	24797	0	0	0
20	SLU 74	8559	-1506	25312	0	0	0
20	SLU 75	8559	-1506	25312	0	0	0
20	SLU 76	8731	-1505	25485	0	0	0
20	SLU 77	8731	-1505	25485	0	0	0
20	SLU 78	8777	-1548	25828	0	0	0
20	SLU 79	8777	-1548	25828	0	0	0
20	SLU 80	8571	-1409	24657	0	0	0
20	SLU 81	8617	-1452	25000	0	0	0
20	SLU 82	8686	-1516	25514	0	0	0
20	SLU 83	8686	-1516	25514	0	0	0
20	SLU 84	8858	-1516	25687	0	0	0
20	SLU 85	8904	-1558	26030	0	0	0
20	SLU 86	8972	-1622	26545	0	0	0
20	SLU 87	8972	-1623	26545	0	0	0
20	SLU 88	9144	-1622	26718	0	0	0
20	SLU 89	9145	-1622	26718	0	0	0
20	SLU 90	9190	-1664	27061	0	0	0
20	SLU 91	9190	-1665	27061	0	0	0
20	SLU 92	9191	-1584	26506	0	0	0
20	SLU 93	9191	-1584	26506	0	0	0
20	SLU 94	9237	-1626	26849	0	0	0
20	SLU 95	9237	-1627	26850	0	0	0
20	SLU 96	9477	-1690	27537	0	0	0
20	SLU 97	9478	-1690	27537	0	0	0
20	SLU 98	9523	-1733	27880	0	0	0
20	SLU 99	9523	-1733	27880	0	0	0
20	SLU 100	8158	-1293	23423	0	0	0
20	SLU 101	8158	-1293	23423	0	0	0
20	SLU 102	8204	-1336	23766	0	0	0

Nodo	Cont.	Reazione a traslazione			Reazione a rotazione		
Ind.	N.br.	x	y	z	x	y	z
20	SLU 103	8272	-1400	24281	0	0	0
20	SLU 104	8272	-1400	24281	0	0	0
20	SLU 105	8445	-1399	24454	0	0	0
20	SLU 106	8490	-1442	24797	0	0	0
20	SLU 107	8559	-1506	25312	0	0	0
20	SLU 108	8559	-1506	25312	0	0	0
20	SLU 109	8731	-1505	25485	0	0	0
20	SLU 110	8731	-1505	25485	0	0	0
20	SLU 111	8777	-1548	25828	0	0	0
20	SLU 112	8777	-1548	25828	0	0	0
20	SLU 113	8571	-1409	24657	0	0	0
20	SLU 114	8617	-1452	25000	0	0	0
20	SLU 115	8686	-1516	25514	0	0	0
20	SLU 116	8686	-1516	25514	0	0	0
20	SLU 117	8858	-1516	25687	0	0	0
20	SLU 118	8904	-1558	26030	0	0	0
20	SLU 119	8972	-1622	26545	0	0	0
20	SLU 120	8972	-1623	26545	0	0	0
20	SLU 121	9144	-1622	26718	0	0	0
20	SLU 122	9145	-1622	26718	0	0	0
20	SLU 123	9190	-1664	27061	0	0	0
20	SLU 124	9190	-1665	27061	0	0	0
20	SLU 125	9191	-1584	26506	0	0	0
20	SLU 126	9191	-1584	26506	0	0	0
20	SLU 127	9237	-1626	26849	0	0	0
20	SLU 128	9237	-1627	26850	0	0	0
20	SLU 129	9477	-1690	27537	0	0	0
20	SLU 130	9478	-1690	27537	0	0	0
20	SLU 131	9523	-1733	27880	0	0	0
20	SLU 132	9523	-1733	27880	0	0	0
20	SLE RA 1	6275	-994	18018	0	0	0
20	SLE RA 2	6275	-994	18018	0	0	0
20	SLE RA 3	6306	-1023	18247	0	0	0
20	SLE RA 4	6352	-1066	18590	0	0	0
20	SLE RA 5	6352	-1066	18590	0	0	0
20	SLE RA 6	6466	-1065	18705	0	0	0
20	SLE RA 7	6497	-1094	18934	0	0	0
20	SLE RA 8	6543	-1137	19277	0	0	0
20	SLE RA 9	6543	-1137	19277	0	0	0
20	SLE RA 10	6658	-1136	19392	0	0	0
20	SLE RA 11	6658	-1136	19392	0	0	0
20	SLE RA 12	6688	-1165	19621	0	0	0
20	SLE RA 13	6688	-1165	19621	0	0	0
20	SLE RA 14	6551	-1072	18840	0	0	0
20	SLE RA 15	6581	-1101	19069	0	0	0
20	SLE RA 16	6627	-1143	19412	0	0	0
20	SLE RA 17	6627	-1143	19412	0	0	0
20	SLE RA 18	6742	-1143	19527	0	0	0
20	SLE RA 19	6772	-1172	19756	0	0	0
20	SLE RA 20	6818	-1214	20099	0	0	0
20	SLE RA 21	6818	-1214	20099	0	0	0
20	SLE RA 22	6933	-1214	20214	0	0	0
20	SLE RA 23	6933	-1214	20214	0	0	0
20	SLE RA 24	6964	-1242	20443	0	0	0
20	SLE RA 25	6964	-1242	20443	0	0	0
20	SLE RA 26	6964	-1188	20073	0	0	0
20	SLE RA 27	6964	-1188	20073	0	0	0
20	SLE RA 28	6994	-1217	20302	0	0	0
20	SLE RA 29	6994	-1217	20302	0	0	0
20	SLE RA 30	7155	-1259	20760	0	0	0
20	SLE RA 31	7155	-1259	20761	0	0	0
20	SLE RA 32	7186	-1288	20989	0	0	0
20	SLE RA 33	7186	-1288	20989	0	0	0
20	SLE FR 1	6275	-994	18018	0	0	0
20	SLE FR 2	6275	-994	18018	0	0	0
20	SLE FR 3	6306	-1023	18247	0	0	0
20	SLE FR 4	6352	-1023	18293	0	0	0
20	SLE FR 5	6551	-1072	18840	0	0	0
20	SLE QP 1	6275	-994	18018	0	0	0
20	SLO 1	7854	-920	18734	0	0	0
20	SLO 2	7854	-920	18734	0	0	0
20	SLO 3	7852	-1058	18729	0	0	0
20	SLO 4	7852	-1058	18729	0	0	0
20	SLO 5	6752	-762	18240	0	0	0
20	SLO 6	6752	-762	18240	0	0	0
20	SLO 7	6745	-1223	18224	0	0	0
20	SLO 8	6745	-1223	18224	0	0	0
20	SLO 9	5805	-765	17812	0	0	0
20	SLO 10	5805	-765	17812	0	0	0
20	SLO 11	5799	-1227	17796	0	0	0
20	SLO 12	5799	-1227	17796	0	0	0
20	SLO 13	4699	-930	17307	0	0	0
20	SLO 14	4699	-930	17307	0	0	0
20	SLO 15	4697	-1069	17302	0	0	0
20	SLO 16	4697	-1069	17302	0	0	0
20	SLD 1	7570	-926	18606	0	0	0
20	SLD 2	7570	-926	18606	0	0	0
20	SLD 3	7569	-1054	18601	0	0	0
20	SLD 4	7569	-1054	18601	0	0	0
20	SLD 5	6667	-780	18201	0	0	0
20	SLD 6	6667	-780	18201	0	0	0
20	SLD 7	6660	-1206	18186	0	0	0
20	SLD 8	6660	-1206	18186	0	0	0
20	SLD 9	5890	-782	17849	0	0	0
20	SLD 10	5890	-782	17849	0	0	0

Nodo	Cont.	Reazione a traslazione			Reazione a rotazione		
Ind.	N.br.	x	y	z	x	y	z
20	SLD 11	5884	-1209	17835	0	0	0
20	SLD 12	5884	-1209	17835	0	0	0
20	SLD 13	4982	-935	17434	0	0	0
20	SLD 14	4982	-935	17434	0	0	0
20	SLD 15	4980	-1062	17430	0	0	0
20	SLD 16	4980	-1062	17430	0	0	0
20	SLV 1	9169	-816	19332	0	0	0
20	SLV 2	9169	-816	19332	0	0	0
20	SLV 3	9164	-1154	19320	0	0	0
20	SLV 4	9164	-1154	19320	0	0	0
20	SLV 5	7151	-429	18430	0	0	0
20	SLV 6	7151	-429	18430	0	0	0
20	SLV 7	7134	-1554	18391	0	0	0
20	SLV 8	7134	-1554	18391	0	0	0
20	SLV 9	5416	-435	17645	0	0	0
20	SLV 10	5416	-435	17645	0	0	0
20	SLV 11	5400	-1559	17606	0	0	0
20	SLV 12	5400	-1559	17606	0	0	0
20	SLV 13	3386	-835	16715	0	0	0
20	SLV 14	3386	-835	16715	0	0	0
20	SLV 15	3381	-1172	16704	0	0	0
20	SLV 16	3381	-1172	16704	0	0	0
21	SLU 1	-6275	-994	18018	0	0	0
21	SLU 2	-6275	-995	18018	0	0	0
21	SLU 3	-6321	-1037	18361	0	0	0
21	SLU 4	-6390	-1101	18875	0	0	0
21	SLU 5	-6390	-1102	18876	0	0	0
21	SLU 6	-6562	-1100	19045	0	0	0
21	SLU 7	-6608	-1143	19388	0	0	0
21	SLU 8	-6676	-1207	19903	0	0	0
21	SLU 9	-6676	-1207	19903	0	0	0
21	SLU 10	-6848	-1205	20073	0	0	0
21	SLU 11	-6848	-1205	20073	0	0	0
21	SLU 12	-6894	-1248	20416	0	0	0
21	SLU 13	-6894	-1248	20416	0	0	0
21	SLU 14	-6688	-1109	19246	0	0	0
21	SLU 15	-6734	-1152	19589	0	0	0
21	SLU 16	-6803	-1216	20103	0	0	0
21	SLU 17	-6803	-1216	20103	0	0	0
21	SLU 18	-6975	-1214	20273	0	0	0
21	SLU 19	-7020	-1257	20616	0	0	0
21	SLU 20	-7089	-1321	21131	0	0	0
21	SLU 21	-7089	-1321	21131	0	0	0
21	SLU 22	-7261	-1319	21301	0	0	0
21	SLU 23	-7261	-1320	21301	0	0	0
21	SLU 24	-7307	-1362	21644	0	0	0
21	SLU 25	-7307	-1362	21644	0	0	0
21	SLU 26	-7307	-1281	21088	0	0	0
21	SLU 27	-7307	-1281	21088	0	0	0
21	SLU 28	-7353	-1324	21431	0	0	0
21	SLU 29	-7353	-1324	21431	0	0	0
21	SLU 30	-7594	-1386	22115	0	0	0
21	SLU 31	-7594	-1386	22115	0	0	0
21	SLU 32	-7639	-1429	22458	0	0	0
21	SLU 33	-7640	-1429	22458	0	0	0
21	SLU 34	-6275	-994	18018	0	0	0
21	SLU 35	-6275	-995	18018	0	0	0
21	SLU 36	-6321	-1037	18361	0	0	0
21	SLU 37	-6390	-1101	18875	0	0	0
21	SLU 38	-6390	-1102	18876	0	0	0
21	SLU 39	-6562	-1100	19045	0	0	0
21	SLU 40	-6608	-1143	19388	0	0	0
21	SLU 41	-6676	-1207	19903	0	0	0
21	SLU 42	-6676	-1207	19903	0	0	0
21	SLU 43	-6848	-1205	20073	0	0	0
21	SLU 44	-6848	-1205	20073	0	0	0
21	SLU 45	-6894	-1248	20416	0	0	0
21	SLU 46	-6894	-1248	20416	0	0	0
21	SLU 47	-6688	-1109	19246	0	0	0
21	SLU 48	-6734	-1152	19589	0	0	0
21	SLU 49	-6803	-1216	20103	0	0	0
21	SLU 50	-6803	-1216	20103	0	0	0
21	SLU 51	-6975	-1214	20273	0	0	0
21	SLU 52	-7020	-1257	20616	0	0	0
21	SLU 53	-7089	-1321	21131	0	0	0
21	SLU 54	-7089	-1321	21131	0	0	0
21	SLU 55	-7261	-1319	21301	0	0	0
21	SLU 56	-7261	-1320	21301	0	0	0
21	SLU 57	-7307	-1362	21644	0	0	0
21	SLU 58	-7307	-1362	21644	0	0	0
21	SLU 59	-7307	-1281	21088	0	0	0
21	SLU 60	-7307	-1281	21088	0	0	0
21	SLU 61	-7353	-1324	21431	0	0	0
21	SLU 62	-7353	-1324	21431	0	0	0
21	SLU 63	-7594	-1386	22115	0	0	0
21	SLU 64	-7594	-1386	22115	0	0	0
21	SLU 65	-7639	-1429	22458	0	0	0
21	SLU 66	-7640	-1429	22458	0	0	0
21	SLU 67	-8158	-1293	23423	0	0	0
21	SLU 68	-8158	-1293	23423	0	0	0
21	SLU 69	-8204	-1336	23766	0	0	0
21	SLU 70	-8272	-1400	24281	0	0	0
21	SLU 71	-8272	-1400	24281	0	0	0
21	SLU 72	-8444	-1398	24451	0	0	0
21	SLU 73	-8490	-1441	24794	0	0	0

Nodo	Cont.	Reazione a traslazione			Reazione a rotazione		
Ind.	N.br.	x	y	z	x	y	z
21	SLU 74	-8559	-1505	25308	0	0	0
21	SLU 75	-8559	-1505	25308	0	0	0
21	SLU 76	-8731	-1503	25478	0	0	0
21	SLU 77	-8731	-1503	25478	0	0	0
21	SLU 78	-8777	-1546	25821	0	0	0
21	SLU 79	-8777	-1546	25821	0	0	0
21	SLU 80	-8571	-1407	24651	0	0	0
21	SLU 81	-8616	-1450	24994	0	0	0
21	SLU 82	-8685	-1514	25509	0	0	0
21	SLU 83	-8685	-1515	25509	0	0	0
21	SLU 84	-8857	-1513	25679	0	0	0
21	SLU 85	-8903	-1556	26022	0	0	0
21	SLU 86	-8972	-1619	26536	0	0	0
21	SLU 87	-8972	-1620	26536	0	0	0
21	SLU 88	-9144	-1618	26706	0	0	0
21	SLU 89	-9144	-1618	26706	0	0	0
21	SLU 90	-9189	-1660	27049	0	0	0
21	SLU 91	-9189	-1661	27049	0	0	0
21	SLU 92	-9190	-1579	26493	0	0	0
21	SLU 93	-9190	-1579	26493	0	0	0
21	SLU 94	-9235	-1622	26836	0	0	0
21	SLU 95	-9236	-1622	26836	0	0	0
21	SLU 96	-9476	-1684	27520	0	0	0
21	SLU 97	-9476	-1684	27520	0	0	0
21	SLU 98	-9522	-1727	27863	0	0	0
21	SLU 99	-9522	-1727	27864	0	0	0
21	SLU 100	-8158	-1293	23423	0	0	0
21	SLU 101	-8158	-1293	23423	0	0	0
21	SLU 102	-8204	-1336	23766	0	0	0
21	SLU 103	-8272	-1400	24281	0	0	0
21	SLU 104	-8272	-1400	24281	0	0	0
21	SLU 105	-8444	-1398	24451	0	0	0
21	SLU 106	-8490	-1441	24794	0	0	0
21	SLU 107	-8559	-1505	25308	0	0	0
21	SLU 108	-8559	-1505	25308	0	0	0
21	SLU 109	-8731	-1503	25478	0	0	0
21	SLU 110	-8731	-1503	25478	0	0	0
21	SLU 111	-8777	-1546	25821	0	0	0
21	SLU 112	-8777	-1546	25821	0	0	0
21	SLU 113	-8571	-1407	24651	0	0	0
21	SLU 114	-8616	-1450	24994	0	0	0
21	SLU 115	-8685	-1514	25509	0	0	0
21	SLU 116	-8685	-1515	25509	0	0	0
21	SLU 117	-8857	-1513	25679	0	0	0
21	SLU 118	-8903	-1556	26022	0	0	0
21	SLU 119	-8972	-1619	26536	0	0	0
21	SLU 120	-8972	-1620	26536	0	0	0
21	SLU 121	-9144	-1618	26706	0	0	0
21	SLU 122	-9144	-1618	26706	0	0	0
21	SLU 123	-9189	-1660	27049	0	0	0
21	SLU 124	-9189	-1661	27049	0	0	0
21	SLU 125	-9190	-1579	26493	0	0	0
21	SLU 126	-9190	-1579	26493	0	0	0
21	SLU 127	-9235	-1622	26836	0	0	0
21	SLU 128	-9236	-1622	26836	0	0	0
21	SLU 129	-9476	-1684	27520	0	0	0
21	SLU 130	-9476	-1684	27520	0	0	0
21	SLU 131	-9522	-1727	27863	0	0	0
21	SLU 132	-9522	-1727	27864	0	0	0
21	SLE RA 1	-6275	-994	18018	0	0	0
21	SLE RA 2	-6275	-994	18018	0	0	0
21	SLE RA 3	-6306	-1023	18247	0	0	0
21	SLE RA 4	-6352	-1066	18590	0	0	0
21	SLE RA 5	-6352	-1066	18590	0	0	0
21	SLE RA 6	-6466	-1065	18703	0	0	0
21	SLE RA 7	-6497	-1093	18932	0	0	0
21	SLE RA 8	-6543	-1136	19275	0	0	0
21	SLE RA 9	-6543	-1136	19275	0	0	0
21	SLE RA 10	-6657	-1135	19388	0	0	0
21	SLE RA 11	-6657	-1135	19388	0	0	0
21	SLE RA 12	-6688	-1163	19617	0	0	0
21	SLE RA 13	-6688	-1163	19617	0	0	0
21	SLE RA 14	-6550	-1071	18837	0	0	0
21	SLE RA 15	-6581	-1099	19065	0	0	0
21	SLE RA 16	-6627	-1142	19408	0	0	0
21	SLE RA 17	-6627	-1142	19408	0	0	0
21	SLE RA 18	-6741	-1141	19522	0	0	0
21	SLE RA 19	-6772	-1170	19750	0	0	0
21	SLE RA 20	-6818	-1212	20093	0	0	0
21	SLE RA 21	-6818	-1212	20093	0	0	0
21	SLE RA 22	-6932	-1211	20206	0	0	0
21	SLE RA 23	-6932	-1211	20206	0	0	0
21	SLE RA 24	-6963	-1239	20435	0	0	0
21	SLE RA 25	-6963	-1240	20435	0	0	0
21	SLE RA 26	-6963	-1185	20064	0	0	0
21	SLE RA 27	-6963	-1185	20064	0	0	0
21	SLE RA 28	-6994	-1214	20293	0	0	0
21	SLE RA 29	-6994	-1214	20293	0	0	0
21	SLE RA 30	-7154	-1255	20749	0	0	0
21	SLE RA 31	-7154	-1256	20749	0	0	0
21	SLE RA 32	-7185	-1284	20978	0	0	0
21	SLE RA 33	-7185	-1284	20978	0	0	0
21	SLE FR 1	-6275	-994	18018	0	0	0
21	SLE FR 2	-6275	-994	18018	0	0	0
21	SLE FR 3	-6306	-1023	18247	0	0	0

Nodo	Cont.	Reazione a traslazione			Reazione a rotazione		
Ind.	N.br.	x	y	z	x	y	z
21	SLE FR 4	-6352	-1022	18292	0	0	0
21	SLE FR 5	-6550	-1071	18836	0	0	0
21	SLE QP 1	-6275	-994	18018	0	0	0
21	SLO 1	-4699	-930	17307	0	0	0
21	SLO 2	-4699	-930	17307	0	0	0
21	SLO 3	-4697	-1069	17302	0	0	0
21	SLO 4	-4697	-1069	17302	0	0	0
21	SLO 5	-5805	-765	17812	0	0	0
21	SLO 6	-5805	-765	17812	0	0	0
21	SLO 7	-5799	-1227	17796	0	0	0
21	SLO 8	-5799	-1227	17796	0	0	0
21	SLO 9	-6752	-762	18240	0	0	0
21	SLO 10	-6752	-762	18240	0	0	0
21	SLO 11	-6745	-1223	18224	0	0	0
21	SLO 12	-6745	-1223	18224	0	0	0
21	SLO 13	-7854	-920	18734	0	0	0
21	SLO 14	-7854	-920	18734	0	0	0
21	SLO 15	-7852	-1058	18729	0	0	0
21	SLO 16	-7852	-1058	18729	0	0	0
21	SLD 1	-4982	-935	17434	0	0	0
21	SLD 2	-4982	-935	17434	0	0	0
21	SLD 3	-4980	-1062	17430	0	0	0
21	SLD 4	-4980	-1062	17430	0	0	0
21	SLD 5	-5890	-782	17849	0	0	0
21	SLD 6	-5890	-782	17849	0	0	0
21	SLD 7	-5884	-1209	17835	0	0	0
21	SLD 8	-5884	-1209	17835	0	0	0
21	SLD 9	-6667	-780	18201	0	0	0
21	SLD 10	-6667	-780	18201	0	0	0
21	SLD 11	-6660	-1206	18186	0	0	0
21	SLD 12	-6660	-1206	18186	0	0	0
21	SLD 13	-7570	-926	18606	0	0	0
21	SLD 14	-7570	-926	18606	0	0	0
21	SLD 15	-7569	-1054	18601	0	0	0
21	SLD 16	-7569	-1054	18601	0	0	0
21	SLV 1	-3386	-835	16715	0	0	0
21	SLV 2	-3386	-835	16715	0	0	0
21	SLV 3	-3381	-1172	16704	0	0	0
21	SLV 4	-3381	-1172	16704	0	0	0
21	SLV 5	-5416	-435	17645	0	0	0
21	SLV 6	-5416	-435	17645	0	0	0
21	SLV 7	-5400	-1559	17606	0	0	0
21	SLV 8	-5400	-1559	17606	0	0	0
21	SLV 9	-7151	-429	18430	0	0	0
21	SLV 10	-7151	-429	18430	0	0	0
21	SLV 11	-7134	-1554	18391	0	0	0
21	SLV 12	-7134	-1554	18391	0	0	0
21	SLV 13	-9169	-816	19332	0	0	0
21	SLV 14	-9169	-816	19332	0	0	0
21	SLV 15	-9164	-1154	19320	0	0	0
21	SLV 16	-9164	-1154	19320	0	0	0
22	SLU 1	6658	-2450	18835	0	0	0
22	SLU 2	6658	-2450	18835	0	0	0
22	SLU 3	6696	-2514	19039	0	0	0
22	SLU 4	6752	-2609	19346	0	0	0
22	SLU 5	6752	-2609	19346	0	0	0
22	SLU 6	6837	-2608	19432	0	0	0
22	SLU 7	6874	-2671	19636	0	0	0
22	SLU 8	6930	-2766	19943	0	0	0
22	SLU 9	6930	-2766	19943	0	0	0
22	SLU 10	7015	-2765	20029	0	0	0
22	SLU 11	7015	-2765	20029	0	0	0
22	SLU 12	7052	-2828	20233	0	0	0
22	SLU 13	7052	-2829	20233	0	0	0
22	SLU 14	6903	-2623	19541	0	0	0
22	SLU 15	6940	-2686	19745	0	0	0
22	SLU 16	6996	-2781	20052	0	0	0
22	SLU 17	6996	-2782	20052	0	0	0
22	SLU 18	7081	-2780	20138	0	0	0
22	SLU 19	7118	-2844	20342	0	0	0
22	SLU 20	7174	-2939	20649	0	0	0
22	SLU 21	7174	-2939	20649	0	0	0
22	SLU 22	7259	-2938	20734	0	0	0
22	SLU 23	7259	-2938	20735	0	0	0
22	SLU 24	7297	-3001	20939	0	0	0
22	SLU 25	7297	-3001	20939	0	0	0
22	SLU 26	7270	-2882	20600	0	0	0
22	SLU 27	7270	-2882	20600	0	0	0
22	SLU 28	7307	-2945	20804	0	0	0
22	SLU 29	7307	-2945	20804	0	0	0
22	SLU 30	7448	-3039	21197	0	0	0
22	SLU 31	7448	-3039	21197	0	0	0
22	SLU 32	7485	-3103	21401	0	0	0
22	SLU 33	7485	-3103	21401	0	0	0
22	SLU 34	6658	-2450	18835	0	0	0
22	SLU 35	6658	-2450	18835	0	0	0
22	SLU 36	6696	-2514	19039	0	0	0
22	SLU 37	6752	-2609	19346	0	0	0
22	SLU 38	6752	-2609	19346	0	0	0
22	SLU 39	6837	-2608	19432	0	0	0
22	SLU 40	6874	-2671	19636	0	0	0
22	SLU 41	6930	-2766	19943	0	0	0
22	SLU 42	6930	-2766	19943	0	0	0
22	SLU 43	7015	-2765	20029	0	0	0
22	SLU 44	7015	-2765	20029	0	0	0

Nodo	Cont.	Reazione a traslazione			Reazione a rotazione		
Ind.	N.br.	x	y	z	x	y	z
22	SLU 45	7052	-2828	20233	0	0	0
22	SLU 46	7052	-2829	20233	0	0	0
22	SLU 47	6903	-2623	19541	0	0	0
22	SLU 48	6940	-2686	19745	0	0	0
22	SLU 49	6996	-2781	20052	0	0	0
22	SLU 50	6996	-2782	20052	0	0	0
22	SLU 51	7081	-2780	20138	0	0	0
22	SLU 52	7118	-2844	20342	0	0	0
22	SLU 53	7174	-2939	20649	0	0	0
22	SLU 54	7174	-2939	20649	0	0	0
22	SLU 55	7259	-2938	20734	0	0	0
22	SLU 56	7259	-2938	20735	0	0	0
22	SLU 57	7297	-3001	20939	0	0	0
22	SLU 58	7297	-3001	20939	0	0	0
22	SLU 59	7270	-2882	20600	0	0	0
22	SLU 60	7270	-2882	20600	0	0	0
22	SLU 61	7307	-2945	20804	0	0	0
22	SLU 62	7307	-2945	20804	0	0	0
22	SLU 63	7448	-3039	21197	0	0	0
22	SLU 64	7448	-3039	21197	0	0	0
22	SLU 65	7485	-3103	21401	0	0	0
22	SLU 66	7485	-3103	21401	0	0	0
22	SLU 67	8656	-3185	24485	0	0	0
22	SLU 68	8656	-3185	24485	0	0	0
22	SLU 69	8693	-3249	24690	0	0	0
22	SLU 70	8749	-3344	24996	0	0	0
22	SLU 71	8749	-3344	24996	0	0	0
22	SLU 72	8834	-3343	25082	0	0	0
22	SLU 73	8871	-3406	25287	0	0	0
22	SLU 74	8927	-3501	25593	0	0	0
22	SLU 75	8927	-3501	25593	0	0	0
22	SLU 76	9012	-3500	25679	0	0	0
22	SLU 77	9012	-3500	25679	0	0	0
22	SLU 78	9050	-3564	25883	0	0	0
22	SLU 79	9050	-3564	25883	0	0	0
22	SLU 80	8900	-3358	25191	0	0	0
22	SLU 81	8938	-3421	25396	0	0	0
22	SLU 82	8994	-3517	25702	0	0	0
22	SLU 83	8994	-3517	25702	0	0	0
22	SLU 84	9079	-3515	25788	0	0	0
22	SLU 85	9116	-3579	25993	0	0	0
22	SLU 86	9172	-3674	26299	0	0	0
22	SLU 87	9172	-3674	26299	0	0	0
22	SLU 88	9257	-3673	26385	0	0	0
22	SLU 89	9257	-3673	26385	0	0	0
22	SLU 90	9294	-3736	26589	0	0	0
22	SLU 91	9294	-3736	26589	0	0	0
22	SLU 92	9267	-3617	26250	0	0	0
22	SLU 93	9267	-3617	26250	0	0	0
22	SLU 94	9304	-3680	26455	0	0	0
22	SLU 95	9304	-3680	26455	0	0	0
22	SLU 96	9445	-3774	26847	0	0	0
22	SLU 97	9445	-3774	26847	0	0	0
22	SLU 98	9483	-3838	27051	0	0	0
22	SLU 99	9483	-3838	27051	0	0	0
22	SLU 100	8656	-3185	24485	0	0	0
22	SLU 101	8656	-3185	24485	0	0	0
22	SLU 102	8693	-3249	24690	0	0	0
22	SLU 103	8749	-3344	24996	0	0	0
22	SLU 104	8749	-3344	24996	0	0	0
22	SLU 105	8834	-3343	25082	0	0	0
22	SLU 106	8871	-3406	25287	0	0	0
22	SLU 107	8927	-3501	25593	0	0	0
22	SLU 108	8927	-3501	25593	0	0	0
22	SLU 109	9012	-3500	25679	0	0	0
22	SLU 110	9012	-3500	25679	0	0	0
22	SLU 111	9050	-3564	25883	0	0	0
22	SLU 112	9050	-3564	25883	0	0	0
22	SLU 113	8900	-3358	25191	0	0	0
22	SLU 114	8938	-3421	25396	0	0	0
22	SLU 115	8994	-3517	25702	0	0	0
22	SLU 116	8994	-3517	25702	0	0	0
22	SLU 117	9079	-3515	25788	0	0	0
22	SLU 118	9116	-3579	25993	0	0	0
22	SLU 119	9172	-3674	26299	0	0	0
22	SLU 120	9172	-3674	26299	0	0	0
22	SLU 121	9257	-3673	26385	0	0	0
22	SLU 122	9257	-3673	26385	0	0	0
22	SLU 123	9294	-3736	26589	0	0	0
22	SLU 124	9294	-3736	26589	0	0	0
22	SLU 125	9267	-3617	26250	0	0	0
22	SLU 126	9267	-3617	26250	0	0	0
22	SLU 127	9304	-3680	26455	0	0	0
22	SLU 128	9304	-3680	26455	0	0	0
22	SLU 129	9445	-3774	26847	0	0	0
22	SLU 130	9445	-3774	26847	0	0	0
22	SLU 131	9483	-3838	27051	0	0	0
22	SLU 132	9483	-3838	27051	0	0	0
22	SLE RA 1	6658	-2450	18835	0	0	0
22	SLE RA 2	6658	-2450	18835	0	0	0
22	SLE RA 3	6683	-2493	18971	0	0	0
22	SLE RA 4	6720	-2556	19176	0	0	0
22	SLE RA 5	6720	-2556	19176	0	0	0
22	SLE RA 6	6777	-2555	19233	0	0	0
22	SLE RA 7	6802	-2598	19369	0	0	0

Nodo	Cont.	Reazione a traslazione			Reazione a rotazione		
Ind.	N.br.	x	y	z	x	y	z
22	SLE RA 8	6839	-2661	19573	0	0	0
22	SLE RA 9	6839	-2661	19573	0	0	0
22	SLE RA 10	6896	-2660	19631	0	0	0
22	SLE RA 11	6896	-2660	19631	0	0	0
22	SLE RA 12	6921	-2702	19767	0	0	0
22	SLE RA 13	6921	-2702	19767	0	0	0
22	SLE RA 14	6821	-2565	19306	0	0	0
22	SLE RA 15	6846	-2608	19442	0	0	0
22	SLE RA 16	6883	-2671	19646	0	0	0
22	SLE RA 17	6883	-2671	19646	0	0	0
22	SLE RA 18	6940	-2670	19703	0	0	0
22	SLE RA 19	6965	-2713	19840	0	0	0
22	SLE RA 20	7002	-2776	20044	0	0	0
22	SLE RA 21	7002	-2776	20044	0	0	0
22	SLE RA 22	7059	-2775	20101	0	0	0
22	SLE RA 23	7059	-2775	20101	0	0	0
22	SLE RA 24	7084	-2817	20238	0	0	0
22	SLE RA 25	7084	-2818	20238	0	0	0
22	SLE RA 26	7066	-2738	20011	0	0	0
22	SLE RA 27	7066	-2738	20011	0	0	0
22	SLE RA 28	7091	-2780	20148	0	0	0
22	SLE RA 29	7091	-2780	20148	0	0	0
22	SLE RA 30	7185	-2843	20409	0	0	0
22	SLE RA 31	7185	-2843	20409	0	0	0
22	SLE RA 32	7210	-2885	20546	0	0	0
22	SLE RA 33	7210	-2885	20546	0	0	0
22	SLE FR 1	6658	-2450	18835	0	0	0
22	SLE FR 2	6658	-2450	18835	0	0	0
22	SLE FR 3	6683	-2493	18971	0	0	0
22	SLE FR 4	6706	-2492	18994	0	0	0
22	SLE FR 5	6821	-2565	19305	0	0	0
22	SLE QP 1	6658	-2450	18835	0	0	0
22	SLO 1	8188	-2414	19490	0	0	0
22	SLO 2	8188	-2414	19490	0	0	0
22	SLO 3	8223	-2462	19573	0	0	0
22	SLO 4	8223	-2462	19573	0	0	0
22	SLO 5	7063	-2366	18905	0	0	0
22	SLO 6	7063	-2366	18905	0	0	0
22	SLO 7	7182	-2527	19182	0	0	0
22	SLO 8	7182	-2527	19182	0	0	0
22	SLO 9	6135	-2373	18487	0	0	0
22	SLO 10	6135	-2373	18487	0	0	0
22	SLO 11	6254	-2534	18764	0	0	0
22	SLO 12	6254	-2534	18764	0	0	0
22	SLO 13	5093	-2439	18097	0	0	0
22	SLO 14	5093	-2439	18097	0	0	0
22	SLO 15	5129	-2487	18180	0	0	0
22	SLO 16	5129	-2487	18180	0	0	0
22	SLD 1	7911	-2418	19368	0	0	0
22	SLD 2	7911	-2418	19368	0	0	0
22	SLD 3	7944	-2462	19445	0	0	0
22	SLD 4	7944	-2462	19445	0	0	0
22	SLD 5	6984	-2373	18878	0	0	0
22	SLD 6	6984	-2373	18878	0	0	0
22	SLD 7	7094	-2522	19134	0	0	0
22	SLD 8	7094	-2522	19134	0	0	0
22	SLD 9	6222	-2379	18535	0	0	0
22	SLD 10	6222	-2379	18535	0	0	0
22	SLD 11	6333	-2528	18791	0	0	0
22	SLD 12	6333	-2528	18791	0	0	0
22	SLD 13	5372	-2438	18225	0	0	0
22	SLD 14	5372	-2438	18225	0	0	0
22	SLD 15	5405	-2483	18302	0	0	0
22	SLD 16	5405	-2483	18302	0	0	0
22	SLV 1	9451	-2369	20010	0	0	0
22	SLV 2	9451	-2369	20010	0	0	0
22	SLV 3	9538	-2486	20213	0	0	0
22	SLV 4	9538	-2486	20213	0	0	0
22	SLV 5	7364	-2247	18880	0	0	0
22	SLV 6	7364	-2247	18880	0	0	0
22	SLV 7	7654	-2640	19555	0	0	0
22	SLV 8	7654	-2640	19555	0	0	0
22	SLV 9	5662	-2261	18114	0	0	0
22	SLV 10	5662	-2261	18114	0	0	0
22	SLV 11	5953	-2653	18790	0	0	0
22	SLV 12	5953	-2653	18790	0	0	0
22	SLV 13	3779	-2414	17457	0	0	0
22	SLV 14	3779	-2414	17457	0	0	0
22	SLV 15	3866	-2532	17660	0	0	0
22	SLV 16	3866	-2532	17660	0	0	0
23	SLU 1	-6658	-2450	18835	0	0	0
23	SLU 2	-6658	-2450	18835	0	0	0
23	SLU 3	-6696	-2514	19039	0	0	0
23	SLU 4	-6752	-2609	19346	0	0	0
23	SLU 5	-6752	-2609	19346	0	0	0
23	SLU 6	-6837	-2607	19427	0	0	0
23	SLU 7	-6874	-2671	19632	0	0	0
23	SLU 8	-6930	-2766	19938	0	0	0
23	SLU 9	-6930	-2766	19938	0	0	0
23	SLU 10	-7015	-2764	20020	0	0	0
23	SLU 11	-7015	-2764	20020	0	0	0
23	SLU 12	-7052	-2827	20224	0	0	0
23	SLU 13	-7052	-2828	20224	0	0	0
23	SLU 14	-6903	-2622	19534	0	0	0
23	SLU 15	-6940	-2686	19738	0	0	0

Nodo	Cont.	Reazione a traslazione			Reazione a rotazione		
Ind.	N.br.	x	y	z	x	y	z
23	SLU 16	-6996	-2781	20045	0	0	0
23	SLU 17	-6996	-2781	20045	0	0	0
23	SLU 18	-7081	-2779	20126	0	0	0
23	SLU 19	-7118	-2842	20330	0	0	0
23	SLU 20	-7174	-2938	20637	0	0	0
23	SLU 21	-7174	-2938	20637	0	0	0
23	SLU 22	-7259	-2936	20718	0	0	0
23	SLU 23	-7259	-2936	20719	0	0	0
23	SLU 24	-7297	-2999	20923	0	0	0
23	SLU 25	-7297	-2999	20923	0	0	0
23	SLU 26	-7269	-2880	20581	0	0	0
23	SLU 27	-7270	-2880	20582	0	0	0
23	SLU 28	-7307	-2943	20786	0	0	0
23	SLU 29	-7307	-2943	20786	0	0	0
23	SLU 30	-7448	-3037	21174	0	0	0
23	SLU 31	-7448	-3037	21174	0	0	0
23	SLU 32	-7485	-3100	21378	0	0	0
23	SLU 33	-7485	-3100	21378	0	0	0
23	SLU 34	-6658	-2450	18835	0	0	0
23	SLU 35	-6658	-2450	18835	0	0	0
23	SLU 36	-6696	-2514	19039	0	0	0
23	SLU 37	-6752	-2609	19346	0	0	0
23	SLU 38	-6752	-2609	19346	0	0	0
23	SLU 39	-6837	-2607	19427	0	0	0
23	SLU 40	-6874	-2671	19632	0	0	0
23	SLU 41	-6930	-2766	19938	0	0	0
23	SLU 42	-6930	-2766	19938	0	0	0
23	SLU 43	-7015	-2764	20020	0	0	0
23	SLU 44	-7015	-2764	20020	0	0	0
23	SLU 45	-7052	-2827	20224	0	0	0
23	SLU 46	-7052	-2828	20224	0	0	0
23	SLU 47	-6903	-2622	19534	0	0	0
23	SLU 48	-6940	-2686	19738	0	0	0
23	SLU 49	-6996	-2781	20045	0	0	0
23	SLU 50	-6996	-2781	20045	0	0	0
23	SLU 51	-7081	-2779	20126	0	0	0
23	SLU 52	-7118	-2842	20330	0	0	0
23	SLU 53	-7174	-2938	20637	0	0	0
23	SLU 54	-7174	-2938	20637	0	0	0
23	SLU 55	-7259	-2936	20718	0	0	0
23	SLU 56	-7259	-2936	20719	0	0	0
23	SLU 57	-7297	-2999	20923	0	0	0
23	SLU 58	-7297	-2999	20923	0	0	0
23	SLU 59	-7269	-2880	20581	0	0	0
23	SLU 60	-7270	-2880	20582	0	0	0
23	SLU 61	-7307	-2943	20786	0	0	0
23	SLU 62	-7307	-2943	20786	0	0	0
23	SLU 63	-7448	-3037	21174	0	0	0
23	SLU 64	-7448	-3037	21174	0	0	0
23	SLU 65	-7485	-3100	21378	0	0	0
23	SLU 66	-7485	-3100	21378	0	0	0
23	SLU 67	-8656	-3185	24485	0	0	0
23	SLU 68	-8656	-3185	24485	0	0	0
23	SLU 69	-8693	-3249	24690	0	0	0
23	SLU 70	-8749	-3344	24996	0	0	0
23	SLU 71	-8749	-3344	24996	0	0	0
23	SLU 72	-8834	-3342	25078	0	0	0
23	SLU 73	-8871	-3406	25282	0	0	0
23	SLU 74	-8927	-3501	25589	0	0	0
23	SLU 75	-8927	-3501	25589	0	0	0
23	SLU 76	-9012	-3499	25670	0	0	0
23	SLU 77	-9012	-3499	25670	0	0	0
23	SLU 78	-9050	-3563	25875	0	0	0
23	SLU 79	-9050	-3563	25875	0	0	0
23	SLU 80	-8900	-3357	25184	0	0	0
23	SLU 81	-8938	-3421	25388	0	0	0
23	SLU 82	-8993	-3516	25695	0	0	0
23	SLU 83	-8994	-3516	25695	0	0	0
23	SLU 84	-9079	-3514	25776	0	0	0
23	SLU 85	-9116	-3578	25981	0	0	0
23	SLU 86	-9172	-3673	26287	0	0	0
23	SLU 87	-9172	-3673	26288	0	0	0
23	SLU 88	-9257	-3671	26369	0	0	0
23	SLU 89	-9257	-3671	26369	0	0	0
23	SLU 90	-9294	-3734	26573	0	0	0
23	SLU 91	-9294	-3734	26573	0	0	0
23	SLU 92	-9267	-3615	26232	0	0	0
23	SLU 93	-9267	-3615	26232	0	0	0
23	SLU 94	-9304	-3678	26436	0	0	0
23	SLU 95	-9304	-3678	26436	0	0	0
23	SLU 96	-9445	-3772	26824	0	0	0
23	SLU 97	-9445	-3772	26824	0	0	0
23	SLU 98	-9483	-3835	27029	0	0	0
23	SLU 99	-9483	-3835	27029	0	0	0
23	SLU 100	-8656	-3185	24485	0	0	0
23	SLU 101	-8656	-3185	24485	0	0	0
23	SLU 102	-8693	-3249	24690	0	0	0
23	SLU 103	-8749	-3344	24996	0	0	0
23	SLU 104	-8749	-3344	24996	0	0	0
23	SLU 105	-8834	-3342	25078	0	0	0
23	SLU 106	-8871	-3406	25282	0	0	0
23	SLU 107	-8927	-3501	25589	0	0	0
23	SLU 108	-8927	-3501	25589	0	0	0
23	SLU 109	-9012	-3499	25670	0	0	0
23	SLU 110	-9012	-3499	25670	0	0	0

Nodo	Cont.	Reazione a traslazione			Reazione a rotazione		
Ind.	N.br.	x	y	z	x	y	z
23	SLU 111	-9050	-3563	25875	0	0	0
23	SLU 112	-9050	-3563	25875	0	0	0
23	SLU 113	-8900	-3357	25184	0	0	0
23	SLU 114	-8938	-3421	25388	0	0	0
23	SLU 115	-8993	-3516	25695	0	0	0
23	SLU 116	-8994	-3516	25695	0	0	0
23	SLU 117	-9079	-3514	25776	0	0	0
23	SLU 118	-9116	-3578	25981	0	0	0
23	SLU 119	-9172	-3673	26287	0	0	0
23	SLU 120	-9172	-3673	26288	0	0	0
23	SLU 121	-9257	-3671	26369	0	0	0
23	SLU 122	-9257	-3671	26369	0	0	0
23	SLU 123	-9294	-3734	26573	0	0	0
23	SLU 124	-9294	-3734	26573	0	0	0
23	SLU 125	-9267	-3615	26232	0	0	0
23	SLU 126	-9267	-3615	26232	0	0	0
23	SLU 127	-9304	-3678	26436	0	0	0
23	SLU 128	-9304	-3678	26436	0	0	0
23	SLU 129	-9445	-3772	26824	0	0	0
23	SLU 130	-9445	-3772	26824	0	0	0
23	SLU 131	-9483	-3835	27029	0	0	0
23	SLU 132	-9483	-3835	27029	0	0	0
23	SLE RA 1	-6658	-2450	18835	0	0	0
23	SLE RA 2	-6658	-2450	18835	0	0	0
23	SLE RA 3	-6683	-2493	18971	0	0	0
23	SLE RA 4	-6720	-2556	19176	0	0	0
23	SLE RA 5	-6720	-2556	19176	0	0	0
23	SLE RA 6	-6777	-2555	19230	0	0	0
23	SLE RA 7	-6802	-2597	19366	0	0	0
23	SLE RA 8	-6839	-2661	19571	0	0	0
23	SLE RA 9	-6839	-2661	19571	0	0	0
23	SLE RA 10	-6896	-2659	19625	0	0	0
23	SLE RA 11	-6896	-2659	19625	0	0	0
23	SLE RA 12	-6921	-2702	19761	0	0	0
23	SLE RA 13	-6921	-2702	19761	0	0	0
23	SLE RA 14	-6821	-2565	19301	0	0	0
23	SLE RA 15	-6846	-2607	19437	0	0	0
23	SLE RA 16	-6883	-2671	19641	0	0	0
23	SLE RA 17	-6883	-2671	19641	0	0	0
23	SLE RA 18	-6940	-2669	19696	0	0	0
23	SLE RA 19	-6965	-2712	19832	0	0	0
23	SLE RA 20	-7002	-2775	20036	0	0	0
23	SLE RA 21	-7002	-2775	20036	0	0	0
23	SLE RA 22	-7059	-2774	20091	0	0	0
23	SLE RA 23	-7059	-2774	20091	0	0	0
23	SLE RA 24	-7084	-2816	20227	0	0	0
23	SLE RA 25	-7084	-2816	20227	0	0	0
23	SLE RA 26	-7066	-2737	19999	0	0	0
23	SLE RA 27	-7066	-2737	19999	0	0	0
23	SLE RA 28	-7091	-2779	20136	0	0	0
23	SLE RA 29	-7091	-2779	20136	0	0	0
23	SLE RA 30	-7185	-2841	20394	0	0	0
23	SLE RA 31	-7185	-2841	20394	0	0	0
23	SLE RA 32	-7209	-2883	20531	0	0	0
23	SLE RA 33	-7209	-2883	20531	0	0	0
23	SLE FR 1	-6658	-2450	18835	0	0	0
23	SLE FR 2	-6658	-2450	18835	0	0	0
23	SLE FR 3	-6683	-2493	18971	0	0	0
23	SLE FR 4	-6706	-2492	18993	0	0	0
23	SLE FR 5	-6821	-2565	19301	0	0	0
23	SLE QP 1	-6658	-2450	18835	0	0	0
23	SLO 1	-5093	-2439	18097	0	0	0
23	SLO 2	-5093	-2439	18097	0	0	0
23	SLO 3	-5129	-2487	18180	0	0	0
23	SLO 4	-5129	-2487	18180	0	0	0
23	SLO 5	-6135	-2373	18487	0	0	0
23	SLO 6	-6135	-2373	18487	0	0	0
23	SLO 7	-6254	-2534	18764	0	0	0
23	SLO 8	-6254	-2534	18764	0	0	0
23	SLO 9	-7063	-2366	18905	0	0	0
23	SLO 10	-7063	-2366	18905	0	0	0
23	SLO 11	-7182	-2527	19182	0	0	0
23	SLO 12	-7182	-2527	19182	0	0	0
23	SLO 13	-8188	-2414	19490	0	0	0
23	SLO 14	-8188	-2414	19490	0	0	0
23	SLO 15	-8223	-2462	19573	0	0	0
23	SLO 16	-8223	-2462	19573	0	0	0
23	SLD 1	-5372	-2438	18225	0	0	0
23	SLD 2	-5372	-2438	18225	0	0	0
23	SLD 3	-5405	-2483	18302	0	0	0
23	SLD 4	-5405	-2483	18302	0	0	0
23	SLD 5	-6222	-2379	18535	0	0	0
23	SLD 6	-6222	-2379	18535	0	0	0
23	SLD 7	-6333	-2528	18791	0	0	0
23	SLD 8	-6333	-2528	18791	0	0	0
23	SLD 9	-6984	-2373	18878	0	0	0
23	SLD 10	-6984	-2373	18878	0	0	0
23	SLD 11	-7094	-2522	19134	0	0	0
23	SLD 12	-7094	-2522	19134	0	0	0
23	SLD 13	-7911	-2418	19368	0	0	0
23	SLD 14	-7911	-2418	19368	0	0	0
23	SLD 15	-7944	-2462	19445	0	0	0
23	SLD 16	-7944	-2462	19445	0	0	0
23	SLV 1	-3779	-2414	17457	0	0	0
23	SLV 2	-3779	-2414	17457	0	0	0

Nodo	Cont.	Reazione a traslazione			Reazione a rotazione		
Ind.	N.br.	x	y	z	x	y	z
23	SLV 3	-3866	-2532	17660	0	0	0
23	SLV 4	-3866	-2532	17660	0	0	0
23	SLV 5	-5662	-2261	18114	0	0	0
23	SLV 6	-5662	-2261	18114	0	0	0
23	SLV 7	-5953	-2653	18790	0	0	0
23	SLV 8	-5953	-2653	18790	0	0	0
23	SLV 9	-7364	-2247	18880	0	0	0
23	SLV 10	-7364	-2247	18880	0	0	0
23	SLV 11	-7654	-2640	19555	0	0	0
23	SLV 12	-7654	-2640	19555	0	0	0
23	SLV 13	-9451	-2369	20010	0	0	0
23	SLV 14	-9451	-2369	20010	0	0	0
23	SLV 15	-9538	-2486	20213	0	0	0
23	SLV 16	-9538	-2486	20213	0	0	0

8.4 TAGLI AI LIVELLI

***Livello**: livello rispetto a cui è calcolato il taglio.*
***Nome**: nome completo del livello.*
***Cont.**: Contesto nel quale viene valutato il taglio.*
***N.br.**: nome breve della condizione o combinazione di carico.*
***Totale**: totale del taglio al livello.*
***F**: forza del taglio. [daN]*
***X**: componente lungo l'asse X globale. [daN]*
***Y**: componente lungo l'asse Y globale. [daN]*
***Z**: componente lungo l'asse Z globale. [daN]*
***Aste verticali**: contributo al taglio totale dato dalle aste verticali.*
***F**: forza del taglio. [daN]*
***X**: componente lungo l'asse X globale. [daN]*
***Y**: componente lungo l'asse Y globale. [daN]*
***Z**: componente lungo l'asse Z globale. [daN]*
***Pareti**: contributo al taglio totale dato dalle pareti e piastre generiche verticali.*
***F**: forza del taglio. [daN]*
***X**: componente lungo l'asse X globale. [daN]*
***Y**: componente lungo l'asse Y globale. [daN]*
***Z**: componente lungo l'asse Z globale. [daN]*

Livello	Cont.	Totale			Aste verticali			Pareti		
Nome	N.br.	F			F			F		
		X	Y	Z	X	Y	Z	X	Y	Z
Fondazione	Pesi	0	0	-406453	0	0	0	0	0	0
Fondazione	Eccezione SdC3	0	0	-60138	0	0	0	0	0	0
Fondazione	Neve	0	0	-26659	0	0	0	0	0	0
Fondazione	Eccezionale SdC4	0	0	-3625	0	0	0	0	0	0
Fondazione	Eccezionale SdC1	0	0	-315961	0	0	0	0	0	0
Fondazione	X SLV	60622	0	0	0	0	0	0	0	0
Fondazione	Y SLV	0	10272	0	0	0	0	0	0	0
Fondazione	X SLD	27566	0	0	0	0	0	0	0	0
Fondazione	Y SLD	0	3895	0	0	0	0	0	0	0
Fondazione	X SLO	33566	0	0	0	0	0	0	0	0
Fondazione	Y SLO	0	4215	0	0	0	0	0	0	0
Fondazione	R Ux	0	0	0	0	0	0	0	0	0
Fondazione	R Uy	0	0	0	0	0	0	0	0	0
Fondazione	R Rz	0	0	0	0	0	0	0	0	0
Fondazione	SLU 1	0	0	-406453	0	0	0	0	0	0
Fondazione	SLU 2	0	0	-880394	0	0	0	0	0	0
Fondazione	SLU 3	0	0	-882569	0	0	0	0	0	0
Fondazione	SLU 4	0	0	-411890	0	0	0	0	0	0
Fondazione	SLU 5	0	0	-767347	0	0	0	0	0	0
Fondazione	SLU 6	0	0	-900388	0	0	0	0	0	0
Fondazione	SLU 7	0	0	-902563	0	0	0	0	0	0
Fondazione	SLU 8	0	0	-431885	0	0	0	0	0	0
Fondazione	SLU 9	0	0	-787341	0	0	0	0	0	0
Fondazione	SLU 10	0	0	-446441	0	0	0	0	0	0
Fondazione	SLU 11	0	0	-801897	0	0	0	0	0	0
Fondazione	SLU 12	0	0	-448616	0	0	0	0	0	0
Fondazione	SLU 13	0	0	-804072	0	0	0	0	0	0
Fondazione	SLU 14	0	0	-916477	0	0	0	0	0	0
Fondazione	SLU 15	0	0	-918652	0	0	0	0	0	0
Fondazione	SLU 16	0	0	-447973	0	0	0	0	0	0
Fondazione	SLU 17	0	0	-803429	0	0	0	0	0	0
Fondazione	SLU 18	0	0	-936471	0	0	0	0	0	0
Fondazione	SLU 19	0	0	-938646	0	0	0	0	0	0
Fondazione	SLU 20	0	0	-467967	0	0	0	0	0	0
Fondazione	SLU 21	0	0	-823423	0	0	0	0	0	0
Fondazione	SLU 22	0	0	-482524	0	0	0	0	0	0
Fondazione	SLU 23	0	0	-837980	0	0	0	0	0	0
Fondazione	SLU 24	0	0	-484699	0	0	0	0	0	0

Livello	Cont.	Totale			Aste verticali			Pareti		
Nome	N.br.	F			F			F		
		X	Y	Z	X	Y	Z	X	Y	Z
Fondazione	SLU 25	0	0	-840155	0	0	0	0	0	0
Fondazione	SLU 26	0	0	-496659	0	0	0	0	0	0
Fondazione	SLU 27	0	0	-852115	0	0	0	0	0	0
Fondazione	SLU 28	0	0	-498834	0	0	0	0	0	0
Fondazione	SLU 29	0	0	-854290	0	0	0	0	0	0
Fondazione	SLU 30	0	0	-516653	0	0	0	0	0	0
Fondazione	SLU 31	0	0	-872109	0	0	0	0	0	0
Fondazione	SLU 32	0	0	-518828	0	0	0	0	0	0
Fondazione	SLU 33	0	0	-874284	0	0	0	0	0	0
Fondazione	SLU 34	0	0	-406453	0	0	0	0	0	0
Fondazione	SLU 35	0	0	-880394	0	0	0	0	0	0
Fondazione	SLU 36	0	0	-882569	0	0	0	0	0	0
Fondazione	SLU 37	0	0	-411890	0	0	0	0	0	0
Fondazione	SLU 38	0	0	-767347	0	0	0	0	0	0
Fondazione	SLU 39	0	0	-900388	0	0	0	0	0	0
Fondazione	SLU 40	0	0	-902563	0	0	0	0	0	0
Fondazione	SLU 41	0	0	-431885	0	0	0	0	0	0
Fondazione	SLU 42	0	0	-787341	0	0	0	0	0	0
Fondazione	SLU 43	0	0	-446441	0	0	0	0	0	0
Fondazione	SLU 44	0	0	-801897	0	0	0	0	0	0
Fondazione	SLU 45	0	0	-448616	0	0	0	0	0	0
Fondazione	SLU 46	0	0	-804072	0	0	0	0	0	0
Fondazione	SLU 47	0	0	-916477	0	0	0	0	0	0
Fondazione	SLU 48	0	0	-918652	0	0	0	0	0	0
Fondazione	SLU 49	0	0	-447973	0	0	0	0	0	0
Fondazione	SLU 50	0	0	-803429	0	0	0	0	0	0
Fondazione	SLU 51	0	0	-936471	0	0	0	0	0	0
Fondazione	SLU 52	0	0	-938646	0	0	0	0	0	0
Fondazione	SLU 53	0	0	-467967	0	0	0	0	0	0
Fondazione	SLU 54	0	0	-823423	0	0	0	0	0	0
Fondazione	SLU 55	0	0	-482524	0	0	0	0	0	0
Fondazione	SLU 56	0	0	-837980	0	0	0	0	0	0
Fondazione	SLU 57	0	0	-484699	0	0	0	0	0	0
Fondazione	SLU 58	0	0	-840155	0	0	0	0	0	0
Fondazione	SLU 59	0	0	-496659	0	0	0	0	0	0
Fondazione	SLU 60	0	0	-852115	0	0	0	0	0	0
Fondazione	SLU 61	0	0	-498834	0	0	0	0	0	0
Fondazione	SLU 62	0	0	-854290	0	0	0	0	0	0
Fondazione	SLU 63	0	0	-516653	0	0	0	0	0	0
Fondazione	SLU 64	0	0	-872109	0	0	0	0	0	0
Fondazione	SLU 65	0	0	-518828	0	0	0	0	0	0
Fondazione	SLU 66	0	0	-874284	0	0	0	0	0	0
Fondazione	SLU 67	0	0	-528388	0	0	0	0	0	0
Fondazione	SLU 68	0	0	-1002330	0	0	0	0	0	0
Fondazione	SLU 69	0	0	-1004505	0	0	0	0	0	0
Fondazione	SLU 70	0	0	-533826	0	0	0	0	0	0
Fondazione	SLU 71	0	0	-889282	0	0	0	0	0	0
Fondazione	SLU 72	0	0	-1022324	0	0	0	0	0	0
Fondazione	SLU 73	0	0	-1024499	0	0	0	0	0	0
Fondazione	SLU 74	0	0	-553820	0	0	0	0	0	0
Fondazione	SLU 75	0	0	-909276	0	0	0	0	0	0
Fondazione	SLU 76	0	0	-568377	0	0	0	0	0	0
Fondazione	SLU 77	0	0	-923833	0	0	0	0	0	0
Fondazione	SLU 78	0	0	-570552	0	0	0	0	0	0
Fondazione	SLU 79	0	0	-926008	0	0	0	0	0	0
Fondazione	SLU 80	0	0	-1038413	0	0	0	0	0	0
Fondazione	SLU 81	0	0	-1040588	0	0	0	0	0	0
Fondazione	SLU 82	0	0	-569909	0	0	0	0	0	0
Fondazione	SLU 83	0	0	-925365	0	0	0	0	0	0
Fondazione	SLU 84	0	0	-1058407	0	0	0	0	0	0
Fondazione	SLU 85	0	0	-1060582	0	0	0	0	0	0
Fondazione	SLU 86	0	0	-589903	0	0	0	0	0	0
Fondazione	SLU 87	0	0	-945359	0	0	0	0	0	0
Fondazione	SLU 88	0	0	-604459	0	0	0	0	0	0
Fondazione	SLU 89	0	0	-959915	0	0	0	0	0	0
Fondazione	SLU 90	0	0	-606634	0	0	0	0	0	0
Fondazione	SLU 91	0	0	-962091	0	0	0	0	0	0
Fondazione	SLU 92	0	0	-618595	0	0	0	0	0	0
Fondazione	SLU 93	0	0	-974051	0	0	0	0	0	0
Fondazione	SLU 94	0	0	-620770	0	0	0	0	0	0
Fondazione	SLU 95	0	0	-976226	0	0	0	0	0	0
Fondazione	SLU 96	0	0	-638589	0	0	0	0	0	0
Fondazione	SLU 97	0	0	-994045	0	0	0	0	0	0
Fondazione	SLU 98	0	0	-640764	0	0	0	0	0	0
Fondazione	SLU 99	0	0	-996220	0	0	0	0	0	0
Fondazione	SLU 100	0	0	-528388	0	0	0	0	0	0
Fondazione	SLU 101	0	0	-1002330	0	0	0	0	0	0
Fondazione	SLU 102	0	0	-1004505	0	0	0	0	0	0
Fondazione	SLU 103	0	0	-533826	0	0	0	0	0	0
Fondazione	SLU 104	0	0	-889282	0	0	0	0	0	0
Fondazione	SLU 105	0	0	-1022324	0	0	0	0	0	0
Fondazione	SLU 106	0	0	-1024499	0	0	0	0	0	0
Fondazione	SLU 107	0	0	-553820	0	0	0	0	0	0
Fondazione	SLU 108	0	0	-909276	0	0	0	0	0	0
Fondazione	SLU 109	0	0	-568377	0	0	0	0	0	0
Fondazione	SLU 110	0	0	-923833	0	0	0	0	0	0
Fondazione	SLU 111	0	0	-570552	0	0	0	0	0	0
Fondazione	SLU 112	0	0	-926008	0	0	0	0	0	0
Fondazione	SLU 113	0	0	-1038413	0	0	0	0	0	0
Fondazione	SLU 114	0	0	-1040588	0	0	0	0	0	0
Fondazione	SLU 115	0	0	-569909	0	0	0	0	0	0
Fondazione	SLU 116	0	0	-925365	0	0	0	0	0	0
Fondazione	SLU 117	0	0	-1058407	0	0	0	0	0	0
Fondazione	SLU 118	0	0	-1060582	0	0	0	0	0	0

Livello	Cont.	Totale			Aste verticali			Pareti		
Nome	N.br.	F			F			F		
		X	Y	Z	X	Y	Z	X	Y	Z
Fondazione	SLU 119	0	0	-589903	0	0	0	0	0	0
Fondazione	SLU 120	0	0	-945359	0	0	0	0	0	0
Fondazione	SLU 121	0	0	-604459	0	0	0	0	0	0
Fondazione	SLU 122	0	0	-959915	0	0	0	0	0	0
Fondazione	SLU 123	0	0	-606634	0	0	0	0	0	0
Fondazione	SLU 124	0	0	-962091	0	0	0	0	0	0
Fondazione	SLU 125	0	0	-618595	0	0	0	0	0	0
Fondazione	SLU 126	0	0	-974051	0	0	0	0	0	0
Fondazione	SLU 127	0	0	-620770	0	0	0	0	0	0
Fondazione	SLU 128	0	0	-976226	0	0	0	0	0	0
Fondazione	SLU 129	0	0	-638589	0	0	0	0	0	0
Fondazione	SLU 130	0	0	-994045	0	0	0	0	0	0
Fondazione	SLU 131	0	0	-640764	0	0	0	0	0	0
Fondazione	SLU 132	0	0	-996220	0	0	0	0	0	0
Fondazione	SLE RA 1	0	0	-406453	0	0	0	0	0	0
Fondazione	SLE RA 2	0	0	-722414	0	0	0	0	0	0
Fondazione	SLE RA 3	0	0	-723864	0	0	0	0	0	0
Fondazione	SLE RA 4	0	0	-410078	0	0	0	0	0	0
Fondazione	SLE RA 5	0	0	-647049	0	0	0	0	0	0
Fondazione	SLE RA 6	0	0	-735743	0	0	0	0	0	0
Fondazione	SLE RA 7	0	0	-737193	0	0	0	0	0	0
Fondazione	SLE RA 8	0	0	-423407	0	0	0	0	0	0
Fondazione	SLE RA 9	0	0	-660378	0	0	0	0	0	0
Fondazione	SLE RA 10	0	0	-433112	0	0	0	0	0	0
Fondazione	SLE RA 11	0	0	-670082	0	0	0	0	0	0
Fondazione	SLE RA 12	0	0	-434562	0	0	0	0	0	0
Fondazione	SLE RA 13	0	0	-671532	0	0	0	0	0	0
Fondazione	SLE RA 14	0	0	-746469	0	0	0	0	0	0
Fondazione	SLE RA 15	0	0	-747919	0	0	0	0	0	0
Fondazione	SLE RA 16	0	0	-434133	0	0	0	0	0	0
Fondazione	SLE RA 17	0	0	-671104	0	0	0	0	0	0
Fondazione	SLE RA 18	0	0	-759798	0	0	0	0	0	0
Fondazione	SLE RA 19	0	0	-761248	0	0	0	0	0	0
Fondazione	SLE RA 20	0	0	-447462	0	0	0	0	0	0
Fondazione	SLE RA 21	0	0	-684433	0	0	0	0	0	0
Fondazione	SLE RA 22	0	0	-457167	0	0	0	0	0	0
Fondazione	SLE RA 23	0	0	-694137	0	0	0	0	0	0
Fondazione	SLE RA 24	0	0	-458617	0	0	0	0	0	0
Fondazione	SLE RA 25	0	0	-695587	0	0	0	0	0	0
Fondazione	SLE RA 26	0	0	-466590	0	0	0	0	0	0
Fondazione	SLE RA 27	0	0	-703561	0	0	0	0	0	0
Fondazione	SLE RA 28	0	0	-468040	0	0	0	0	0	0
Fondazione	SLE RA 29	0	0	-705011	0	0	0	0	0	0
Fondazione	SLE RA 30	0	0	-479920	0	0	0	0	0	0
Fondazione	SLE RA 31	0	0	-716890	0	0	0	0	0	0
Fondazione	SLE RA 32	0	0	-481370	0	0	0	0	0	0
Fondazione	SLE RA 33	0	0	-718341	0	0	0	0	0	0
Fondazione	SLE FR 1	0	0	-406453	0	0	0	0	0	0
Fondazione	SLE FR 2	0	0	-643423	0	0	0	0	0	0
Fondazione	SLE FR 3	0	0	-407903	0	0	0	0	0	0
Fondazione	SLE FR 4	0	0	-411784	0	0	0	0	0	0
Fondazione	SLE FR 5	0	0	-430508	0	0	0	0	0	0
Fondazione	SLE QP 1	0	0	-406453	0	0	0	0	0	0
Fondazione	SLO 1	-33566	-1264	-406453	0	0	0	0	0	0
Fondazione	SLO 2	-33566	-1264	-406453	0	0	0	0	0	0
Fondazione	SLO 3	-33566	1264	-406453	0	0	0	0	0	0
Fondazione	SLO 4	-33566	1264	-406453	0	0	0	0	0	0
Fondazione	SLO 5	-10070	-4215	-406453	0	0	0	0	0	0
Fondazione	SLO 6	-10070	-4215	-406453	0	0	0	0	0	0
Fondazione	SLO 7	-10070	4215	-406453	0	0	0	0	0	0
Fondazione	SLO 8	-10070	4215	-406453	0	0	0	0	0	0
Fondazione	SLO 9	10070	-4215	-406453	0	0	0	0	0	0
Fondazione	SLO 10	10070	-4215	-406453	0	0	0	0	0	0
Fondazione	SLO 11	10070	4215	-406453	0	0	0	0	0	0
Fondazione	SLO 12	10070	4215	-406453	0	0	0	0	0	0
Fondazione	SLO 13	33566	-1264	-406453	0	0	0	0	0	0
Fondazione	SLO 14	33566	-1264	-406453	0	0	0	0	0	0
Fondazione	SLO 15	33566	1264	-406453	0	0	0	0	0	0
Fondazione	SLO 16	33566	1264	-406453	0	0	0	0	0	0
Fondazione	SLD 1	-27566	-1168	-406453	0	0	0	0	0	0
Fondazione	SLD 2	-27566	-1168	-406453	0	0	0	0	0	0
Fondazione	SLD 3	-27566	1168	-406453	0	0	0	0	0	0
Fondazione	SLD 4	-27566	1168	-406453	0	0	0	0	0	0
Fondazione	SLD 5	-8270	-3895	-406453	0	0	0	0	0	0
Fondazione	SLD 6	-8270	-3895	-406453	0	0	0	0	0	0
Fondazione	SLD 7	-8270	3895	-406453	0	0	0	0	0	0
Fondazione	SLD 8	-8270	3895	-406453	0	0	0	0	0	0
Fondazione	SLD 9	8270	-3895	-406453	0	0	0	0	0	0
Fondazione	SLD 10	8270	-3895	-406453	0	0	0	0	0	0
Fondazione	SLD 11	8270	3895	-406453	0	0	0	0	0	0
Fondazione	SLD 12	8270	3895	-406453	0	0	0	0	0	0
Fondazione	SLD 13	27566	-1168	-406453	0	0	0	0	0	0
Fondazione	SLD 14	27566	-1168	-406453	0	0	0	0	0	0
Fondazione	SLD 15	27566	1168	-406453	0	0	0	0	0	0
Fondazione	SLD 16	27566	1168	-406453	0	0	0	0	0	0
Fondazione	SLV 1	-60622	-3082	-406453	0	0	0	0	0	0
Fondazione	SLV 2	-60622	-3082	-406453	0	0	0	0	0	0
Fondazione	SLV 3	-60622	3082	-406453	0	0	0	0	0	0
Fondazione	SLV 4	-60622	3082	-406453	0	0	0	0	0	0
Fondazione	SLV 5	-18187	-10272	-406453	0	0	0	0	0	0
Fondazione	SLV 6	-18187	-10272	-406453	0	0	0	0	0	0
Fondazione	SLV 7	-18187	10272	-406453	0	0	0	0	0	0
Fondazione	SLV 8	-18187	10272	-406453	0	0	0	0	0	0
Fondazione	SLV 9	18187	-10272	-406453	0	0	0	0	0	0

Livello	Cont.	Totale			Aste verticali			Pareti		
Nome	N.br.	F			F			F		
		X	Y	Z	X	Y	Z	X	Y	Z
Fondazione	SLV 10	18187	-10272	-406453	0	0	0	0	0	0
Fondazione	SLV 11	18187	10272	-406453	0	0	0	0	0	0
Fondazione	SLV 12	18187	10272	-406453	0	0	0	0	0	0
Fondazione	SLV 13	60622	-3082	-406453	0	0	0	0	0	0
Fondazione	SLV 14	60622	-3082	-406453	0	0	0	0	0	0
Fondazione	SLV 15	60622	3082	-406453	0	0	0	0	0	0
Fondazione	SLV 16	60622	3082	-406453	0	0	0	0	0	0
Fondazione	CRTFP Ux+	0	0	0	0	0	0	0	0	0
Fondazione	CRTFP Ux-	0	0	0	0	0	0	0	0	0
Fondazione	CRTFP Uy+	0	0	0	0	0	0	0	0	0
Fondazione	CRTFP Uy-	0	0	0	0	0	0	0	0	0
Fondazione	CRTFP Rz+	0	0	0	0	0	0	0	0	0
Fondazione	CRTFP Rz-	0	0	0	0	0	0	0	0	0
Impalcato 1	Pesi	0	0	-260108	0	0	0	0	0	0
Impalcato 1	Eccezione SdC3	0	0	-48828	0	0	0	0	0	0
Impalcato 1	Neve	0	0	-19866	0	0	0	0	0	0
Impalcato 1	Eccezionale SdC4	0	0	-3625	0	0	0	0	0	0
Impalcato 1	Eccezionale SdC1	0	0	-305731	0	0	0	0	0	0
Impalcato 1	X SLV	41719	0	0	0	0	0	0	0	0
Impalcato 1	Y SLV	0	6489	0	0	0	0	0	0	0
Impalcato 1	X SLD	18958	0	0	0	0	0	0	0	0
Impalcato 1	Y SLD	0	2460	0	0	0	0	0	0	0
Impalcato 1	X SLO	23085	0	0	0	0	0	0	0	0
Impalcato 1	Y SLO	0	2663	0	0	0	0	0	0	0
Impalcato 1	R Ux	0	0	0	0	0	0	0	0	0
Impalcato 1	R Uy	0	0	0	0	0	0	0	0	0
Impalcato 1	R Rz	0	0	0	0	0	0	0	0	0
Impalcato 1	SLU 1	0	0	-260108	0	0	0	0	0	0
Impalcato 1	SLU 2	0	0	-718704	0	0	0	0	0	0
Impalcato 1	SLU 3	0	0	-720879	0	0	0	0	0	0
Impalcato 1	SLU 4	0	0	-265546	0	0	0	0	0	0
Impalcato 1	SLU 5	0	0	-609493	0	0	0	0	0	0
Impalcato 1	SLU 6	0	0	-733604	0	0	0	0	0	0
Impalcato 1	SLU 7	0	0	-735779	0	0	0	0	0	0
Impalcato 1	SLU 8	0	0	-280446	0	0	0	0	0	0
Impalcato 1	SLU 9	0	0	-624393	0	0	0	0	0	0
Impalcato 1	SLU 10	0	0	-289908	0	0	0	0	0	0
Impalcato 1	SLU 11	0	0	-633855	0	0	0	0	0	0
Impalcato 1	SLU 12	0	0	-292083	0	0	0	0	0	0
Impalcato 1	SLU 13	0	0	-636030	0	0	0	0	0	0
Impalcato 1	SLU 14	0	0	-748001	0	0	0	0	0	0
Impalcato 1	SLU 15	0	0	-750176	0	0	0	0	0	0
Impalcato 1	SLU 16	0	0	-294843	0	0	0	0	0	0
Impalcato 1	SLU 17	0	0	-638790	0	0	0	0	0	0
Impalcato 1	SLU 18	0	0	-762901	0	0	0	0	0	0
Impalcato 1	SLU 19	0	0	-765076	0	0	0	0	0	0
Impalcato 1	SLU 20	0	0	-309743	0	0	0	0	0	0
Impalcato 1	SLU 21	0	0	-653690	0	0	0	0	0	0
Impalcato 1	SLU 22	0	0	-319205	0	0	0	0	0	0
Impalcato 1	SLU 23	0	0	-663152	0	0	0	0	0	0
Impalcato 1	SLU 24	0	0	-321380	0	0	0	0	0	0
Impalcato 1	SLU 25	0	0	-665327	0	0	0	0	0	0
Impalcato 1	SLU 26	0	0	-333351	0	0	0	0	0	0
Impalcato 1	SLU 27	0	0	-677298	0	0	0	0	0	0
Impalcato 1	SLU 28	0	0	-335526	0	0	0	0	0	0
Impalcato 1	SLU 29	0	0	-679473	0	0	0	0	0	0
Impalcato 1	SLU 30	0	0	-348250	0	0	0	0	0	0
Impalcato 1	SLU 31	0	0	-692197	0	0	0	0	0	0
Impalcato 1	SLU 32	0	0	-350426	0	0	0	0	0	0
Impalcato 1	SLU 33	0	0	-694372	0	0	0	0	0	0
Impalcato 1	SLU 34	0	0	-260108	0	0	0	0	0	0
Impalcato 1	SLU 35	0	0	-718704	0	0	0	0	0	0
Impalcato 1	SLU 36	0	0	-720879	0	0	0	0	0	0
Impalcato 1	SLU 37	0	0	-265546	0	0	0	0	0	0
Impalcato 1	SLU 38	0	0	-609493	0	0	0	0	0	0
Impalcato 1	SLU 39	0	0	-733604	0	0	0	0	0	0
Impalcato 1	SLU 40	0	0	-735779	0	0	0	0	0	0
Impalcato 1	SLU 41	0	0	-280446	0	0	0	0	0	0
Impalcato 1	SLU 42	0	0	-624393	0	0	0	0	0	0
Impalcato 1	SLU 43	0	0	-289908	0	0	0	0	0	0
Impalcato 1	SLU 44	0	0	-633855	0	0	0	0	0	0
Impalcato 1	SLU 45	0	0	-292083	0	0	0	0	0	0
Impalcato 1	SLU 46	0	0	-636030	0	0	0	0	0	0
Impalcato 1	SLU 47	0	0	-748001	0	0	0	0	0	0
Impalcato 1	SLU 48	0	0	-750176	0	0	0	0	0	0
Impalcato 1	SLU 49	0	0	-294843	0	0	0	0	0	0
Impalcato 1	SLU 50	0	0	-638790	0	0	0	0	0	0
Impalcato 1	SLU 51	0	0	-762901	0	0	0	0	0	0
Impalcato 1	SLU 52	0	0	-765076	0	0	0	0	0	0
Impalcato 1	SLU 53	0	0	-309743	0	0	0	0	0	0
Impalcato 1	SLU 54	0	0	-653690	0	0	0	0	0	0
Impalcato 1	SLU 55	0	0	-319205	0	0	0	0	0	0
Impalcato 1	SLU 56	0	0	-663152	0	0	0	0	0	0
Impalcato 1	SLU 57	0	0	-321380	0	0	0	0	0	0
Impalcato 1	SLU 58	0	0	-665327	0	0	0	0	0	0
Impalcato 1	SLU 59	0	0	-333351	0	0	0	0	0	0
Impalcato 1	SLU 60	0	0	-677298	0	0	0	0	0	0
Impalcato 1	SLU 61	0	0	-335526	0	0	0	0	0	0
Impalcato 1	SLU 62	0	0	-679473	0	0	0	0	0	0
Impalcato 1	SLU 63	0	0	-348250	0	0	0	0	0	0
Impalcato 1	SLU 64	0	0	-692197	0	0	0	0	0	0

Livello	Cont.	Totale			Aste verticali			Pareti		
Nome	N.br.	F			F			F		
		X	Y	Z	X	Y	Z	X	Y	Z
Impalcato 1	SLU 65	0	0	-350426	0	0	0	0	0	0
Impalcato 1	SLU 66	0	0	-694372	0	0	0	0	0	0
Impalcato 1	SLU 67	0	0	-338141	0	0	0	0	0	0
Impalcato 1	SLU 68	0	0	-796736	0	0	0	0	0	0
Impalcato 1	SLU 69	0	0	-798911	0	0	0	0	0	0
Impalcato 1	SLU 70	0	0	-343578	0	0	0	0	0	0
Impalcato 1	SLU 71	0	0	-687525	0	0	0	0	0	0
Impalcato 1	SLU 72	0	0	-811636	0	0	0	0	0	0
Impalcato 1	SLU 73	0	0	-813811	0	0	0	0	0	0
Impalcato 1	SLU 74	0	0	-358478	0	0	0	0	0	0
Impalcato 1	SLU 75	0	0	-702425	0	0	0	0	0	0
Impalcato 1	SLU 76	0	0	-367940	0	0	0	0	0	0
Impalcato 1	SLU 77	0	0	-711887	0	0	0	0	0	0
Impalcato 1	SLU 78	0	0	-370115	0	0	0	0	0	0
Impalcato 1	SLU 79	0	0	-714062	0	0	0	0	0	0
Impalcato 1	SLU 80	0	0	-826033	0	0	0	0	0	0
Impalcato 1	SLU 81	0	0	-828208	0	0	0	0	0	0
Impalcato 1	SLU 82	0	0	-372875	0	0	0	0	0	0
Impalcato 1	SLU 83	0	0	-716822	0	0	0	0	0	0
Impalcato 1	SLU 84	0	0	-840933	0	0	0	0	0	0
Impalcato 1	SLU 85	0	0	-843108	0	0	0	0	0	0
Impalcato 1	SLU 86	0	0	-387775	0	0	0	0	0	0
Impalcato 1	SLU 87	0	0	-731722	0	0	0	0	0	0
Impalcato 1	SLU 88	0	0	-397237	0	0	0	0	0	0
Impalcato 1	SLU 89	0	0	-741184	0	0	0	0	0	0
Impalcato 1	SLU 90	0	0	-399412	0	0	0	0	0	0
Impalcato 1	SLU 91	0	0	-743359	0	0	0	0	0	0
Impalcato 1	SLU 92	0	0	-411383	0	0	0	0	0	0
Impalcato 1	SLU 93	0	0	-755330	0	0	0	0	0	0
Impalcato 1	SLU 94	0	0	-413558	0	0	0	0	0	0
Impalcato 1	SLU 95	0	0	-757505	0	0	0	0	0	0
Impalcato 1	SLU 96	0	0	-426283	0	0	0	0	0	0
Impalcato 1	SLU 97	0	0	-770230	0	0	0	0	0	0
Impalcato 1	SLU 98	0	0	-428458	0	0	0	0	0	0
Impalcato 1	SLU 99	0	0	-772405	0	0	0	0	0	0
Impalcato 1	SLU 100	0	0	-338141	0	0	0	0	0	0
Impalcato 1	SLU 101	0	0	-796736	0	0	0	0	0	0
Impalcato 1	SLU 102	0	0	-798911	0	0	0	0	0	0
Impalcato 1	SLU 103	0	0	-343578	0	0	0	0	0	0
Impalcato 1	SLU 104	0	0	-687525	0	0	0	0	0	0
Impalcato 1	SLU 105	0	0	-811636	0	0	0	0	0	0
Impalcato 1	SLU 106	0	0	-813811	0	0	0	0	0	0
Impalcato 1	SLU 107	0	0	-358478	0	0	0	0	0	0
Impalcato 1	SLU 108	0	0	-702425	0	0	0	0	0	0
Impalcato 1	SLU 109	0	0	-367940	0	0	0	0	0	0
Impalcato 1	SLU 110	0	0	-711887	0	0	0	0	0	0
Impalcato 1	SLU 111	0	0	-370115	0	0	0	0	0	0
Impalcato 1	SLU 112	0	0	-714062	0	0	0	0	0	0
Impalcato 1	SLU 113	0	0	-826033	0	0	0	0	0	0
Impalcato 1	SLU 114	0	0	-828208	0	0	0	0	0	0
Impalcato 1	SLU 115	0	0	-372875	0	0	0	0	0	0
Impalcato 1	SLU 116	0	0	-716822	0	0	0	0	0	0
Impalcato 1	SLU 117	0	0	-840933	0	0	0	0	0	0
Impalcato 1	SLU 118	0	0	-843108	0	0	0	0	0	0
Impalcato 1	SLU 119	0	0	-387775	0	0	0	0	0	0
Impalcato 1	SLU 120	0	0	-731722	0	0	0	0	0	0
Impalcato 1	SLU 121	0	0	-397237	0	0	0	0	0	0
Impalcato 1	SLU 122	0	0	-741184	0	0	0	0	0	0
Impalcato 1	SLU 123	0	0	-399412	0	0	0	0	0	0
Impalcato 1	SLU 124	0	0	-743359	0	0	0	0	0	0
Impalcato 1	SLU 125	0	0	-411383	0	0	0	0	0	0
Impalcato 1	SLU 126	0	0	-755330	0	0	0	0	0	0
Impalcato 1	SLU 127	0	0	-413558	0	0	0	0	0	0
Impalcato 1	SLU 128	0	0	-757505	0	0	0	0	0	0
Impalcato 1	SLU 129	0	0	-426283	0	0	0	0	0	0
Impalcato 1	SLU 130	0	0	-770230	0	0	0	0	0	0
Impalcato 1	SLU 131	0	0	-428458	0	0	0	0	0	0
Impalcato 1	SLU 132	0	0	-772405	0	0	0	0	0	0
Impalcato 1	SLE RA 1	0	0	-260108	0	0	0	0	0	0
Impalcato 1	SLE RA 2	0	0	-565839	0	0	0	0	0	0
Impalcato 1	SLE RA 3	0	0	-567289	0	0	0	0	0	0
Impalcato 1	SLE RA 4	0	0	-263733	0	0	0	0	0	0
Impalcato 1	SLE RA 5	0	0	-493031	0	0	0	0	0	0
Impalcato 1	SLE RA 6	0	0	-575772	0	0	0	0	0	0
Impalcato 1	SLE RA 7	0	0	-577222	0	0	0	0	0	0
Impalcato 1	SLE RA 8	0	0	-273666	0	0	0	0	0	0
Impalcato 1	SLE RA 9	0	0	-502964	0	0	0	0	0	0
Impalcato 1	SLE RA 10	0	0	-279974	0	0	0	0	0	0
Impalcato 1	SLE RA 11	0	0	-509272	0	0	0	0	0	0
Impalcato 1	SLE RA 12	0	0	-281425	0	0	0	0	0	0
Impalcato 1	SLE RA 13	0	0	-510722	0	0	0	0	0	0
Impalcato 1	SLE RA 14	0	0	-585370	0	0	0	0	0	0
Impalcato 1	SLE RA 15	0	0	-586820	0	0	0	0	0	0
Impalcato 1	SLE RA 16	0	0	-283265	0	0	0	0	0	0
Impalcato 1	SLE RA 17	0	0	-512563	0	0	0	0	0	0
Impalcato 1	SLE RA 18	0	0	-595303	0	0	0	0	0	0
Impalcato 1	SLE RA 19	0	0	-596753	0	0	0	0	0	0
Impalcato 1	SLE RA 20	0	0	-293198	0	0	0	0	0	0
Impalcato 1	SLE RA 21	0	0	-522496	0	0	0	0	0	0
Impalcato 1	SLE RA 22	0	0	-299506	0	0	0	0	0	0
Impalcato 1	SLE RA 23	0	0	-528804	0	0	0	0	0	0
Impalcato 1	SLE RA 24	0	0	-300956	0	0	0	0	0	0
Impalcato 1	SLE RA 25	0	0	-530254	0	0	0	0	0	0
Impalcato 1	SLE RA 26	0	0	-308936	0	0	0	0	0	0

Livello	Cont.	Totale			Aste verticali			Pareti		
Nome	N.br.	F			F			F		
		X	Y	Z	X	Y	Z	X	Y	Z
Impalcato 1	SLE RA 27	0	0	-538234	0	0	0	0	0	0
Impalcato 1	SLE RA 28	0	0	-310387	0	0	0	0	0	0
Impalcato 1	SLE RA 29	0	0	-539684	0	0	0	0	0	0
Impalcato 1	SLE RA 30	0	0	-318870	0	0	0	0	0	0
Impalcato 1	SLE RA 31	0	0	-548168	0	0	0	0	0	0
Impalcato 1	SLE RA 32	0	0	-320320	0	0	0	0	0	0
Impalcato 1	SLE RA 33	0	0	-549618	0	0	0	0	0	0
Impalcato 1	SLE FR 1	0	0	-260108	0	0	0	0	0	0
Impalcato 1	SLE FR 2	0	0	-489406	0	0	0	0	0	0
Impalcato 1	SLE FR 3	0	0	-261558	0	0	0	0	0	0
Impalcato 1	SLE FR 4	0	0	-264081	0	0	0	0	0	0
Impalcato 1	SLE FR 5	0	0	-279639	0	0	0	0	0	0
Impalcato 1	SLE QP 1	0	0	-260108	0	0	0	0	0	0
Impalcato 1	SLO 1	-23085	-799	-260108	0	0	0	0	0	0
Impalcato 1	SLO 2	-23085	-799	-260108	0	0	0	0	0	0
Impalcato 1	SLO 3	-23085	799	-260108	0	0	0	0	0	0
Impalcato 1	SLO 4	-23085	799	-260108	0	0	0	0	0	0
Impalcato 1	SLO 5	-6925	-2663	-260108	0	0	0	0	0	0
Impalcato 1	SLO 6	-6925	-2663	-260108	0	0	0	0	0	0
Impalcato 1	SLO 7	-6925	2663	-260108	0	0	0	0	0	0
Impalcato 1	SLO 8	-6925	2663	-260108	0	0	0	0	0	0
Impalcato 1	SLO 9	6925	-2663	-260108	0	0	0	0	0	0
Impalcato 1	SLO 10	6925	-2663	-260108	0	0	0	0	0	0
Impalcato 1	SLO 11	6925	2663	-260108	0	0	0	0	0	0
Impalcato 1	SLO 12	6925	2663	-260108	0	0	0	0	0	0
Impalcato 1	SLO 13	23085	-799	-260108	0	0	0	0	0	0
Impalcato 1	SLO 14	23085	-799	-260108	0	0	0	0	0	0
Impalcato 1	SLO 15	23085	799	-260108	0	0	0	0	0	0
Impalcato 1	SLO 16	23085	799	-260108	0	0	0	0	0	0
Impalcato 1	SLD 1	-18958	-738	-260108	0	0	0	0	0	0
Impalcato 1	SLD 2	-18958	-738	-260108	0	0	0	0	0	0
Impalcato 1	SLD 3	-18958	738	-260108	0	0	0	0	0	0
Impalcato 1	SLD 4	-18958	738	-260108	0	0	0	0	0	0
Impalcato 1	SLD 5	-5687	-2460	-260108	0	0	0	0	0	0
Impalcato 1	SLD 6	-5687	-2460	-260108	0	0	0	0	0	0
Impalcato 1	SLD 7	-5687	2460	-260108	0	0	0	0	0	0
Impalcato 1	SLD 8	-5687	2460	-260108	0	0	0	0	0	0
Impalcato 1	SLD 9	5687	-2460	-260108	0	0	0	0	0	0
Impalcato 1	SLD 10	5687	-2460	-260108	0	0	0	0	0	0
Impalcato 1	SLD 11	5687	2460	-260108	0	0	0	0	0	0
Impalcato 1	SLD 12	5687	2460	-260108	0	0	0	0	0	0
Impalcato 1	SLD 13	18958	-738	-260108	0	0	0	0	0	0
Impalcato 1	SLD 14	18958	-738	-260108	0	0	0	0	0	0
Impalcato 1	SLD 15	18958	738	-260108	0	0	0	0	0	0
Impalcato 1	SLD 16	18958	738	-260108	0	0	0	0	0	0
Impalcato 1	SLV 1	-41719	-1947	-260108	0	0	0	0	0	0
Impalcato 1	SLV 2	-41719	-1947	-260108	0	0	0	0	0	0
Impalcato 1	SLV 3	-41719	1947	-260108	0	0	0	0	0	0
Impalcato 1	SLV 4	-41719	1947	-260108	0	0	0	0	0	0
Impalcato 1	SLV 5	-12516	-6489	-260108	0	0	0	0	0	0
Impalcato 1	SLV 6	-12516	-6489	-260108	0	0	0	0	0	0
Impalcato 1	SLV 7	-12516	6489	-260108	0	0	0	0	0	0
Impalcato 1	SLV 8	-12516	6489	-260108	0	0	0	0	0	0
Impalcato 1	SLV 9	12516	-6489	-260108	0	0	0	0	0	0
Impalcato 1	SLV 10	12516	-6489	-260108	0	0	0	0	0	0
Impalcato 1	SLV 11	12516	6489	-260108	0	0	0	0	0	0
Impalcato 1	SLV 12	12516	6489	-260108	0	0	0	0	0	0
Impalcato 1	SLV 13	41719	-1947	-260108	0	0	0	0	0	0
Impalcato 1	SLV 14	41719	-1947	-260108	0	0	0	0	0	0
Impalcato 1	SLV 15	41719	1947	-260108	0	0	0	0	0	0
Impalcato 1	SLV 16	41719	1947	-260108	0	0	0	0	0	0
Impalcato 1	CRTFP Ux+	0	0	0	0	0	0	0	0	0
Impalcato 1	CRTFP Ux-	0	0	0	0	0	0	0	0	0
Impalcato 1	CRTFP Uy+	0	0	0	0	0	0	0	0	0
Impalcato 1	CRTFP Uy-	0	0	0	0	0	0	0	0	0
Impalcato 1	CRTFP Rz+	0	0	0	0	0	0	0	0	0
Impalcato 1	CRTFP Rz-	0	0	0	0	0	0	0	0	0
impalcato 2	Pesi	0	0	-161970	0	0	0	0	0	0
impalcato 2	Eccezione SdC3	0	0	-42702	0	0	0	0	0	0
impalcato 2	Neve	0	0	-16190	0	0	0	0	0	0
impalcato 2	Eccezionale SdC4	0	0	-3625	0	0	0	0	0	0
impalcato 2	Eccezionale SdC1	0	0	-300217	0	0	0	0	0	0
impalcato 2	X SLV	26967	0	0	0	0	0	0	0	0
impalcato 2	Y SLV	0	4186	0	0	0	0	0	0	0
impalcato 2	X SLD	12251	0	0	0	0	0	0	0	0
impalcato 2	Y SLD	0	1587	0	0	0	0	0	0	0
impalcato 2	X SLO	14919	0	0	0	0	0	0	0	0
impalcato 2	Y SLO	0	1718	0	0	0	0	0	0	0
impalcato 2	R Ux	0	0	0	0	0	0	0	0	0
impalcato 2	R Uy	0	0	0	0	0	0	0	0	0
impalcato 2	R Rz	0	0	0	0	0	0	0	0	0
impalcato 2	SLU 1	0	0	-161970	0	0	0	0	0	0
impalcato 2	SLU 2	0	0	-612296	0	0	0	0	0	0
impalcato 2	SLU 3	0	0	-614471	0	0	0	0	0	0
impalcato 2	SLU 4	0	0	-167408	0	0	0	0	0	0
impalcato 2	SLU 5	0	0	-505152	0	0	0	0	0	0
impalcato 2	SLU 6	0	0	-624438	0	0	0	0	0	0
impalcato 2	SLU 7	0	0	-626614	0	0	0	0	0	0
impalcato 2	SLU 8	0	0	-179551	0	0	0	0	0	0
impalcato 2	SLU 9	0	0	-517295	0	0	0	0	0	0
impalcato 2	SLU 10	0	0	-186256	0	0	0	0	0	0

Livello	Cont.	Totale			Aste verticali			Pareti		
Nome	N.br.	F			F			F		
		X	Y	Z	X	Y	Z	X	Y	Z
impalcato 2	SLU 11	0	0	-524000	0	0	0	0	0	0
impalcato 2	SLU 12	0	0	-188431	0	0	0	0	0	0
impalcato 2	SLU 13	0	0	-526175	0	0	0	0	0	0
impalcato 2	SLU 14	0	0	-637917	0	0	0	0	0	0
impalcato 2	SLU 15	0	0	-640092	0	0	0	0	0	0
impalcato 2	SLU 16	0	0	-193029	0	0	0	0	0	0
impalcato 2	SLU 17	0	0	-530773	0	0	0	0	0	0
impalcato 2	SLU 18	0	0	-650060	0	0	0	0	0	0
impalcato 2	SLU 19	0	0	-652235	0	0	0	0	0	0
impalcato 2	SLU 20	0	0	-205172	0	0	0	0	0	0
impalcato 2	SLU 21	0	0	-542916	0	0	0	0	0	0
impalcato 2	SLU 22	0	0	-211877	0	0	0	0	0	0
impalcato 2	SLU 23	0	0	-549621	0	0	0	0	0	0
impalcato 2	SLU 24	0	0	-214052	0	0	0	0	0	0
impalcato 2	SLU 25	0	0	-551796	0	0	0	0	0	0
impalcato 2	SLU 26	0	0	-226023	0	0	0	0	0	0
impalcato 2	SLU 27	0	0	-563767	0	0	0	0	0	0
impalcato 2	SLU 28	0	0	-228198	0	0	0	0	0	0
impalcato 2	SLU 29	0	0	-565942	0	0	0	0	0	0
impalcato 2	SLU 30	0	0	-238166	0	0	0	0	0	0
impalcato 2	SLU 31	0	0	-575910	0	0	0	0	0	0
impalcato 2	SLU 32	0	0	-240341	0	0	0	0	0	0
impalcato 2	SLU 33	0	0	-578085	0	0	0	0	0	0
impalcato 2	SLU 34	0	0	-161970	0	0	0	0	0	0
impalcato 2	SLU 35	0	0	-612296	0	0	0	0	0	0
impalcato 2	SLU 36	0	0	-614471	0	0	0	0	0	0
impalcato 2	SLU 37	0	0	-167408	0	0	0	0	0	0
impalcato 2	SLU 38	0	0	-505152	0	0	0	0	0	0
impalcato 2	SLU 39	0	0	-624438	0	0	0	0	0	0
impalcato 2	SLU 40	0	0	-626614	0	0	0	0	0	0
impalcato 2	SLU 41	0	0	-179551	0	0	0	0	0	0
impalcato 2	SLU 42	0	0	-517295	0	0	0	0	0	0
impalcato 2	SLU 43	0	0	-186256	0	0	0	0	0	0
impalcato 2	SLU 44	0	0	-524000	0	0	0	0	0	0
impalcato 2	SLU 45	0	0	-188431	0	0	0	0	0	0
impalcato 2	SLU 46	0	0	-526175	0	0	0	0	0	0
impalcato 2	SLU 47	0	0	-637917	0	0	0	0	0	0
impalcato 2	SLU 48	0	0	-640092	0	0	0	0	0	0
impalcato 2	SLU 49	0	0	-193029	0	0	0	0	0	0
impalcato 2	SLU 50	0	0	-530773	0	0	0	0	0	0
impalcato 2	SLU 51	0	0	-650060	0	0	0	0	0	0
impalcato 2	SLU 52	0	0	-652235	0	0	0	0	0	0
impalcato 2	SLU 53	0	0	-205172	0	0	0	0	0	0
impalcato 2	SLU 54	0	0	-542916	0	0	0	0	0	0
impalcato 2	SLU 55	0	0	-211877	0	0	0	0	0	0
impalcato 2	SLU 56	0	0	-549621	0	0	0	0	0	0
impalcato 2	SLU 57	0	0	-214052	0	0	0	0	0	0
impalcato 2	SLU 58	0	0	-551796	0	0	0	0	0	0
impalcato 2	SLU 59	0	0	-226023	0	0	0	0	0	0
impalcato 2	SLU 60	0	0	-563767	0	0	0	0	0	0
impalcato 2	SLU 61	0	0	-228198	0	0	0	0	0	0
impalcato 2	SLU 62	0	0	-565942	0	0	0	0	0	0
impalcato 2	SLU 63	0	0	-238166	0	0	0	0	0	0
impalcato 2	SLU 64	0	0	-575910	0	0	0	0	0	0
impalcato 2	SLU 65	0	0	-240341	0	0	0	0	0	0
impalcato 2	SLU 66	0	0	-578085	0	0	0	0	0	0
impalcato 2	SLU 67	0	0	-210562	0	0	0	0	0	0
impalcato 2	SLU 68	0	0	-660887	0	0	0	0	0	0
impalcato 2	SLU 69	0	0	-663062	0	0	0	0	0	0
impalcato 2	SLU 70	0	0	-215999	0	0	0	0	0	0
impalcato 2	SLU 71	0	0	-553743	0	0	0	0	0	0
impalcato 2	SLU 72	0	0	-673030	0	0	0	0	0	0
impalcato 2	SLU 73	0	0	-675205	0	0	0	0	0	0
impalcato 2	SLU 74	0	0	-228142	0	0	0	0	0	0
impalcato 2	SLU 75	0	0	-565886	0	0	0	0	0	0
impalcato 2	SLU 76	0	0	-234847	0	0	0	0	0	0
impalcato 2	SLU 77	0	0	-572591	0	0	0	0	0	0
impalcato 2	SLU 78	0	0	-237022	0	0	0	0	0	0
impalcato 2	SLU 79	0	0	-574766	0	0	0	0	0	0
impalcato 2	SLU 80	0	0	-686508	0	0	0	0	0	0
impalcato 2	SLU 81	0	0	-688683	0	0	0	0	0	0
impalcato 2	SLU 82	0	0	-241620	0	0	0	0	0	0
impalcato 2	SLU 83	0	0	-579364	0	0	0	0	0	0
impalcato 2	SLU 84	0	0	-698651	0	0	0	0	0	0
impalcato 2	SLU 85	0	0	-700826	0	0	0	0	0	0
impalcato 2	SLU 86	0	0	-253763	0	0	0	0	0	0
impalcato 2	SLU 87	0	0	-591507	0	0	0	0	0	0
impalcato 2	SLU 88	0	0	-260468	0	0	0	0	0	0
impalcato 2	SLU 89	0	0	-598212	0	0	0	0	0	0
impalcato 2	SLU 90	0	0	-262644	0	0	0	0	0	0
impalcato 2	SLU 91	0	0	-600387	0	0	0	0	0	0
impalcato 2	SLU 92	0	0	-274614	0	0	0	0	0	0
impalcato 2	SLU 93	0	0	-612358	0	0	0	0	0	0
impalcato 2	SLU 94	0	0	-276790	0	0	0	0	0	0
impalcato 2	SLU 95	0	0	-614533	0	0	0	0	0	0
impalcato 2	SLU 96	0	0	-286757	0	0	0	0	0	0
impalcato 2	SLU 97	0	0	-624501	0	0	0	0	0	0
impalcato 2	SLU 98	0	0	-288932	0	0	0	0	0	0
impalcato 2	SLU 99	0	0	-626676	0	0	0	0	0	0
impalcato 2	SLU 100	0	0	-210562	0	0	0	0	0	0
impalcato 2	SLU 101	0	0	-660887	0	0	0	0	0	0
impalcato 2	SLU 102	0	0	-663062	0	0	0	0	0	0
impalcato 2	SLU 103	0	0	-215999	0	0	0	0	0	0
impalcato 2	SLU 104	0	0	-553743	0	0	0	0	0	0

Livello	Cont.	Totale			Aste verticali			Pareti		
Nome	N.br.	F			F			F		
		X	Y	Z	X	Y	Z	X	Y	Z
impalcato 2	SLU 105	0	0	-673030	0	0	0	0	0	0
impalcato 2	SLU 106	0	0	-675205	0	0	0	0	0	0
impalcato 2	SLU 107	0	0	-228142	0	0	0	0	0	0
impalcato 2	SLU 108	0	0	-565886	0	0	0	0	0	0
impalcato 2	SLU 109	0	0	-234847	0	0	0	0	0	0
impalcato 2	SLU 110	0	0	-572591	0	0	0	0	0	0
impalcato 2	SLU 111	0	0	-237022	0	0	0	0	0	0
impalcato 2	SLU 112	0	0	-574766	0	0	0	0	0	0
impalcato 2	SLU 113	0	0	-686508	0	0	0	0	0	0
impalcato 2	SLU 114	0	0	-688683	0	0	0	0	0	0
impalcato 2	SLU 115	0	0	-241620	0	0	0	0	0	0
impalcato 2	SLU 116	0	0	-579364	0	0	0	0	0	0
impalcato 2	SLU 117	0	0	-698651	0	0	0	0	0	0
impalcato 2	SLU 118	0	0	-700826	0	0	0	0	0	0
impalcato 2	SLU 119	0	0	-253763	0	0	0	0	0	0
impalcato 2	SLU 120	0	0	-591507	0	0	0	0	0	0
impalcato 2	SLU 121	0	0	-260468	0	0	0	0	0	0
impalcato 2	SLU 122	0	0	-598212	0	0	0	0	0	0
impalcato 2	SLU 123	0	0	-262644	0	0	0	0	0	0
impalcato 2	SLU 124	0	0	-600387	0	0	0	0	0	0
impalcato 2	SLU 125	0	0	-274614	0	0	0	0	0	0
impalcato 2	SLU 126	0	0	-612358	0	0	0	0	0	0
impalcato 2	SLU 127	0	0	-276790	0	0	0	0	0	0
impalcato 2	SLU 128	0	0	-614533	0	0	0	0	0	0
impalcato 2	SLU 129	0	0	-286757	0	0	0	0	0	0
impalcato 2	SLU 130	0	0	-624501	0	0	0	0	0	0
impalcato 2	SLU 131	0	0	-288932	0	0	0	0	0	0
impalcato 2	SLU 132	0	0	-626676	0	0	0	0	0	0
impalcato 2	SLE RA 1	0	0	-161970	0	0	0	0	0	0
impalcato 2	SLE RA 2	0	0	-462187	0	0	0	0	0	0
impalcato 2	SLE RA 3	0	0	-463637	0	0	0	0	0	0
impalcato 2	SLE RA 4	0	0	-165596	0	0	0	0	0	0
impalcato 2	SLE RA 5	0	0	-390758	0	0	0	0	0	0
impalcato 2	SLE RA 6	0	0	-470282	0	0	0	0	0	0
impalcato 2	SLE RA 7	0	0	-471732	0	0	0	0	0	0
impalcato 2	SLE RA 8	0	0	-173691	0	0	0	0	0	0
impalcato 2	SLE RA 9	0	0	-398853	0	0	0	0	0	0
impalcato 2	SLE RA 10	0	0	-178161	0	0	0	0	0	0
impalcato 2	SLE RA 11	0	0	-403323	0	0	0	0	0	0
impalcato 2	SLE RA 12	0	0	-179611	0	0	0	0	0	0
impalcato 2	SLE RA 13	0	0	-404774	0	0	0	0	0	0
impalcato 2	SLE RA 14	0	0	-479268	0	0	0	0	0	0
impalcato 2	SLE RA 15	0	0	-480718	0	0	0	0	0	0
impalcato 2	SLE RA 16	0	0	-182676	0	0	0	0	0	0
impalcato 2	SLE RA 17	0	0	-407839	0	0	0	0	0	0
impalcato 2	SLE RA 18	0	0	-487363	0	0	0	0	0	0
impalcato 2	SLE RA 19	0	0	-488813	0	0	0	0	0	0
impalcato 2	SLE RA 20	0	0	-190772	0	0	0	0	0	0
impalcato 2	SLE RA 21	0	0	-415934	0	0	0	0	0	0
impalcato 2	SLE RA 22	0	0	-195242	0	0	0	0	0	0
impalcato 2	SLE RA 23	0	0	-420404	0	0	0	0	0	0
impalcato 2	SLE RA 24	0	0	-196692	0	0	0	0	0	0
impalcato 2	SLE RA 25	0	0	-421854	0	0	0	0	0	0
impalcato 2	SLE RA 26	0	0	-204672	0	0	0	0	0	0
impalcato 2	SLE RA 27	0	0	-429835	0	0	0	0	0	0
impalcato 2	SLE RA 28	0	0	-206122	0	0	0	0	0	0
impalcato 2	SLE RA 29	0	0	-431285	0	0	0	0	0	0
impalcato 2	SLE RA 30	0	0	-212768	0	0	0	0	0	0
impalcato 2	SLE RA 31	0	0	-437930	0	0	0	0	0	0
impalcato 2	SLE RA 32	0	0	-214218	0	0	0	0	0	0
impalcato 2	SLE RA 33	0	0	-439380	0	0	0	0	0	0
impalcato 2	SLE FR 1	0	0	-161970	0	0	0	0	0	0
impalcato 2	SLE FR 2	0	0	-387133	0	0	0	0	0	0
impalcato 2	SLE FR 3	0	0	-163421	0	0	0	0	0	0
impalcato 2	SLE FR 4	0	0	-165209	0	0	0	0	0	0
impalcato 2	SLE FR 5	0	0	-179051	0	0	0	0	0	0
impalcato 2	SLE QP 1	0	0	-161970	0	0	0	0	0	0
impalcato 2	SLO 1	-14919	-515	-161970	0	0	0	0	0	0
impalcato 2	SLO 2	-14919	-515	-161970	0	0	0	0	0	0
impalcato 2	SLO 3	-14919	515	-161970	0	0	0	0	0	0
impalcato 2	SLO 4	-14919	515	-161970	0	0	0	0	0	0
impalcato 2	SLO 5	-4476	-1718	-161970	0	0	0	0	0	0
impalcato 2	SLO 6	-4476	-1718	-161970	0	0	0	0	0	0
impalcato 2	SLO 7	-4476	1718	-161970	0	0	0	0	0	0
impalcato 2	SLO 8	-4476	1718	-161970	0	0	0	0	0	0
impalcato 2	SLO 9	4476	-1718	-161970	0	0	0	0	0	0
impalcato 2	SLO 10	4476	-1718	-161970	0	0	0	0	0	0
impalcato 2	SLO 11	4476	1718	-161970	0	0	0	0	0	0
impalcato 2	SLO 12	4476	1718	-161970	0	0	0	0	0	0
impalcato 2	SLO 13	14919	-515	-161970	0	0	0	0	0	0
impalcato 2	SLO 14	14919	-515	-161970	0	0	0	0	0	0
impalcato 2	SLO 15	14919	515	-161970	0	0	0	0	0	0
impalcato 2	SLO 16	14919	515	-161970	0	0	0	0	0	0
impalcato 2	SLD 1	-12251	-476	-161970	0	0	0	0	0	0
impalcato 2	SLD 2	-12251	-476	-161970	0	0	0	0	0	0
impalcato 2	SLD 3	-12251	476	-161970	0	0	0	0	0	0
impalcato 2	SLD 4	-12251	476	-161970	0	0	0	0	0	0
impalcato 2	SLD 5	-3675	-1587	-161970	0	0	0	0	0	0
impalcato 2	SLD 6	-3675	-1587	-161970	0	0	0	0	0	0
impalcato 2	SLD 7	-3675	1587	-161970	0	0	0	0	0	0
impalcato 2	SLD 8	-3675	1587	-161970	0	0	0	0	0	0
impalcato 2	SLD 9	3675	-1587	-161970	0	0	0	0	0	0
impalcato 2	SLD 10	3675	-1587	-161970	0	0	0	0	0	0
impalcato 2	SLD 11	3675	1587	-161970	0	0	0	0	0	0

Livello	Cont.	Totale			Aste verticali			Pareti		
Nome	N.br.	F			F			F		
		X	Y	Z	X	Y	Z	X	Y	Z
impalcato 2	SLD 12	3675	1587	-161970	0	0	0	0	0	0
impalcato 2	SLD 13	12251	-476	-161970	0	0	0	0	0	0
impalcato 2	SLD 14	12251	-476	-161970	0	0	0	0	0	0
impalcato 2	SLD 15	12251	476	-161970	0	0	0	0	0	0
impalcato 2	SLD 16	12251	476	-161970	0	0	0	0	0	0
impalcato 2	SLV 1	-26967	-1256	-161970	0	0	0	0	0	0
impalcato 2	SLV 2	-26967	-1256	-161970	0	0	0	0	0	0
impalcato 2	SLV 3	-26967	1256	-161970	0	0	0	0	0	0
impalcato 2	SLV 4	-26967	1256	-161970	0	0	0	0	0	0
impalcato 2	SLV 5	-8090	-4186	-161970	0	0	0	0	0	0
impalcato 2	SLV 6	-8090	-4186	-161970	0	0	0	0	0	0
impalcato 2	SLV 7	-8090	4186	-161970	0	0	0	0	0	0
impalcato 2	SLV 8	-8090	4186	-161970	0	0	0	0	0	0
impalcato 2	SLV 9	8090	-4186	-161970	0	0	0	0	0	0
impalcato 2	SLV 10	8090	-4186	-161970	0	0	0	0	0	0
impalcato 2	SLV 11	8090	4186	-161970	0	0	0	0	0	0
impalcato 2	SLV 12	8090	4186	-161970	0	0	0	0	0	0
impalcato 2	SLV 13	26967	-1256	-161970	0	0	0	0	0	0
impalcato 2	SLV 14	26967	-1256	-161970	0	0	0	0	0	0
impalcato 2	SLV 15	26967	1256	-161970	0	0	0	0	0	0
impalcato 2	SLV 16	26967	1256	-161970	0	0	0	0	0	0
impalcato 2	CRTFP Ux+	0	0	0	0	0	0	0	0	0
impalcato 2	CRTFP Ux-	0	0	0	0	0	0	0	0	0
impalcato 2	CRTFP Uy+	0	0	0	0	0	0	0	0	0
impalcato 2	CRTFP Uy-	0	0	0	0	0	0	0	0	0
impalcato 2	CRTFP Rz+	0	0	0	0	0	0	0	0	0
impalcato 2	CRTFP Rz-	0	0	0	0	0	0	0	0	0
impalcato 3	Pesi	0	0	-109366	0	0	0	0	0	0
impalcato 3	Eccezione SdC3	0	0	-19820	0	0	0	0	0	0
impalcato 3	Neve	0	0	-7174	0	0	0	0	0	0
impalcato 3	Eccezionale SdC4	0	0	-1813	0	0	0	0	0	0
impalcato 3	Eccezionale SdC1	0	0	-148710	0	0	0	0	0	0
impalcato 3	X SLV	10568	0	0	0	0	0	0	0	0
impalcato 3	Y SLV	0	1697	0	0	0	0	0	0	0
impalcato 3	X SLD	4803	0	0	0	0	0	0	0	0
impalcato 3	Y SLD	0	643	0	0	0	0	0	0	0
impalcato 3	X SLO	5849	0	0	0	0	0	0	0	0
impalcato 3	Y SLO	0	696	0	0	0	0	0	0	0
impalcato 3	R Ux	0	0	0	0	0	0	0	0	0
impalcato 3	R Uy	0	0	0	0	0	0	0	0	0
impalcato 3	R Rz	0	0	0	0	0	0	0	0	0
impalcato 3	SLU 1	0	0	-109366	0	0	0	0	0	0
impalcato 3	SLU 2	0	0	-332431	0	0	0	0	0	0
impalcato 3	SLU 3	0	0	-333518	0	0	0	0	0	0
impalcato 3	SLU 4	0	0	-112085	0	0	0	0	0	0
impalcato 3	SLU 5	0	0	-279383	0	0	0	0	0	0
impalcato 3	SLU 6	0	0	-337811	0	0	0	0	0	0
impalcato 3	SLU 7	0	0	-338898	0	0	0	0	0	0
impalcato 3	SLU 8	0	0	-117465	0	0	0	0	0	0
impalcato 3	SLU 9	0	0	-284764	0	0	0	0	0	0
impalcato 3	SLU 10	0	0	-120127	0	0	0	0	0	0
impalcato 3	SLU 11	0	0	-287425	0	0	0	0	0	0
impalcato 3	SLU 12	0	0	-121214	0	0	0	0	0	0
impalcato 3	SLU 13	0	0	-288513	0	0	0	0	0	0
impalcato 3	SLU 14	0	0	-344322	0	0	0	0	0	0
impalcato 3	SLU 15	0	0	-345410	0	0	0	0	0	0
impalcato 3	SLU 16	0	0	-123977	0	0	0	0	0	0
impalcato 3	SLU 17	0	0	-291275	0	0	0	0	0	0
impalcato 3	SLU 18	0	0	-349703	0	0	0	0	0	0
impalcato 3	SLU 19	0	0	-350790	0	0	0	0	0	0
impalcato 3	SLU 20	0	0	-129357	0	0	0	0	0	0
impalcato 3	SLU 21	0	0	-296655	0	0	0	0	0	0
impalcato 3	SLU 22	0	0	-132018	0	0	0	0	0	0
impalcato 3	SLU 23	0	0	-299317	0	0	0	0	0	0
impalcato 3	SLU 24	0	0	-133106	0	0	0	0	0	0
impalcato 3	SLU 25	0	0	-300404	0	0	0	0	0	0
impalcato 3	SLU 26	0	0	-139095	0	0	0	0	0	0
impalcato 3	SLU 27	0	0	-306394	0	0	0	0	0	0
impalcato 3	SLU 28	0	0	-140183	0	0	0	0	0	0
impalcato 3	SLU 29	0	0	-307482	0	0	0	0	0	0
impalcato 3	SLU 30	0	0	-144476	0	0	0	0	0	0
impalcato 3	SLU 31	0	0	-311774	0	0	0	0	0	0
impalcato 3	SLU 32	0	0	-145563	0	0	0	0	0	0
impalcato 3	SLU 33	0	0	-312862	0	0	0	0	0	0
impalcato 3	SLU 34	0	0	-109366	0	0	0	0	0	0
impalcato 3	SLU 35	0	0	-332431	0	0	0	0	0	0
impalcato 3	SLU 36	0	0	-333518	0	0	0	0	0	0
impalcato 3	SLU 37	0	0	-112085	0	0	0	0	0	0
impalcato 3	SLU 38	0	0	-279383	0	0	0	0	0	0
impalcato 3	SLU 39	0	0	-337811	0	0	0	0	0	0
impalcato 3	SLU 40	0	0	-338898	0	0	0	0	0	0
impalcato 3	SLU 41	0	0	-117465	0	0	0	0	0	0
impalcato 3	SLU 42	0	0	-284764	0	0	0	0	0	0
impalcato 3	SLU 43	0	0	-120127	0	0	0	0	0	0
impalcato 3	SLU 44	0	0	-287425	0	0	0	0	0	0
impalcato 3	SLU 45	0	0	-121214	0	0	0	0	0	0
impalcato 3	SLU 46	0	0	-288513	0	0	0	0	0	0
impalcato 3	SLU 47	0	0	-344322	0	0	0	0	0	0
impalcato 3	SLU 48	0	0	-345410	0	0	0	0	0	0
impalcato 3	SLU 49	0	0	-123977	0	0	0	0	0	0
impalcato 3	SLU 50	0	0	-291275	0	0	0	0	0	0

Livello	Cont.	Totale			Aste verticali			Pareti		
Nome	N.br.	F			F			F		
		X	Y	Z	X	Y	Z	X	Y	Z
impalcato 3	SLU 51	0	0	-349703	0	0	0	0	0	0
impalcato 3	SLU 52	0	0	-350790	0	0	0	0	0	0
impalcato 3	SLU 53	0	0	-129357	0	0	0	0	0	0
impalcato 3	SLU 54	0	0	-296655	0	0	0	0	0	0
impalcato 3	SLU 55	0	0	-132018	0	0	0	0	0	0
impalcato 3	SLU 56	0	0	-299317	0	0	0	0	0	0
impalcato 3	SLU 57	0	0	-133106	0	0	0	0	0	0
impalcato 3	SLU 58	0	0	-300404	0	0	0	0	0	0
impalcato 3	SLU 59	0	0	-139095	0	0	0	0	0	0
impalcato 3	SLU 60	0	0	-306394	0	0	0	0	0	0
impalcato 3	SLU 61	0	0	-140183	0	0	0	0	0	0
impalcato 3	SLU 62	0	0	-307482	0	0	0	0	0	0
impalcato 3	SLU 63	0	0	-144476	0	0	0	0	0	0
impalcato 3	SLU 64	0	0	-311774	0	0	0	0	0	0
impalcato 3	SLU 65	0	0	-145563	0	0	0	0	0	0
impalcato 3	SLU 66	0	0	-312862	0	0	0	0	0	0
impalcato 3	SLU 67	0	0	-142176	0	0	0	0	0	0
impalcato 3	SLU 68	0	0	-365240	0	0	0	0	0	0
impalcato 3	SLU 69	0	0	-366328	0	0	0	0	0	0
impalcato 3	SLU 70	0	0	-144894	0	0	0	0	0	0
impalcato 3	SLU 71	0	0	-312193	0	0	0	0	0	0
impalcato 3	SLU 72	0	0	-370621	0	0	0	0	0	0
impalcato 3	SLU 73	0	0	-371708	0	0	0	0	0	0
impalcato 3	SLU 74	0	0	-150275	0	0	0	0	0	0
impalcato 3	SLU 75	0	0	-317573	0	0	0	0	0	0
impalcato 3	SLU 76	0	0	-152936	0	0	0	0	0	0
impalcato 3	SLU 77	0	0	-320235	0	0	0	0	0	0
impalcato 3	SLU 78	0	0	-154024	0	0	0	0	0	0
impalcato 3	SLU 79	0	0	-321322	0	0	0	0	0	0
impalcato 3	SLU 80	0	0	-377132	0	0	0	0	0	0
impalcato 3	SLU 81	0	0	-378220	0	0	0	0	0	0
impalcato 3	SLU 82	0	0	-156786	0	0	0	0	0	0
impalcato 3	SLU 83	0	0	-324085	0	0	0	0	0	0
impalcato 3	SLU 84	0	0	-382513	0	0	0	0	0	0
impalcato 3	SLU 85	0	0	-383600	0	0	0	0	0	0
impalcato 3	SLU 86	0	0	-162167	0	0	0	0	0	0
impalcato 3	SLU 87	0	0	-329465	0	0	0	0	0	0
impalcato 3	SLU 88	0	0	-164828	0	0	0	0	0	0
impalcato 3	SLU 89	0	0	-332127	0	0	0	0	0	0
impalcato 3	SLU 90	0	0	-165916	0	0	0	0	0	0
impalcato 3	SLU 91	0	0	-333214	0	0	0	0	0	0
impalcato 3	SLU 92	0	0	-171905	0	0	0	0	0	0
impalcato 3	SLU 93	0	0	-339204	0	0	0	0	0	0
impalcato 3	SLU 94	0	0	-172993	0	0	0	0	0	0
impalcato 3	SLU 95	0	0	-340291	0	0	0	0	0	0
impalcato 3	SLU 96	0	0	-177286	0	0	0	0	0	0
impalcato 3	SLU 97	0	0	-344584	0	0	0	0	0	0
impalcato 3	SLU 98	0	0	-178373	0	0	0	0	0	0
impalcato 3	SLU 99	0	0	-345672	0	0	0	0	0	0
impalcato 3	SLU 100	0	0	-142176	0	0	0	0	0	0
impalcato 3	SLU 101	0	0	-365240	0	0	0	0	0	0
impalcato 3	SLU 102	0	0	-366328	0	0	0	0	0	0
impalcato 3	SLU 103	0	0	-144894	0	0	0	0	0	0
impalcato 3	SLU 104	0	0	-312193	0	0	0	0	0	0
impalcato 3	SLU 105	0	0	-370621	0	0	0	0	0	0
impalcato 3	SLU 106	0	0	-371708	0	0	0	0	0	0
impalcato 3	SLU 107	0	0	-150275	0	0	0	0	0	0
impalcato 3	SLU 108	0	0	-317573	0	0	0	0	0	0
impalcato 3	SLU 109	0	0	-152936	0	0	0	0	0	0
impalcato 3	SLU 110	0	0	-320235	0	0	0	0	0	0
impalcato 3	SLU 111	0	0	-154024	0	0	0	0	0	0
impalcato 3	SLU 112	0	0	-321322	0	0	0	0	0	0
impalcato 3	SLU 113	0	0	-377132	0	0	0	0	0	0
impalcato 3	SLU 114	0	0	-378220	0	0	0	0	0	0
impalcato 3	SLU 115	0	0	-156786	0	0	0	0	0	0
impalcato 3	SLU 116	0	0	-324085	0	0	0	0	0	0
impalcato 3	SLU 117	0	0	-382513	0	0	0	0	0	0
impalcato 3	SLU 118	0	0	-383600	0	0	0	0	0	0
impalcato 3	SLU 119	0	0	-162167	0	0	0	0	0	0
impalcato 3	SLU 120	0	0	-329465	0	0	0	0	0	0
impalcato 3	SLU 121	0	0	-164828	0	0	0	0	0	0
impalcato 3	SLU 122	0	0	-332127	0	0	0	0	0	0
impalcato 3	SLU 123	0	0	-165916	0	0	0	0	0	0
impalcato 3	SLU 124	0	0	-333214	0	0	0	0	0	0
impalcato 3	SLU 125	0	0	-171905	0	0	0	0	0	0
impalcato 3	SLU 126	0	0	-339204	0	0	0	0	0	0
impalcato 3	SLU 127	0	0	-172993	0	0	0	0	0	0
impalcato 3	SLU 128	0	0	-340291	0	0	0	0	0	0
impalcato 3	SLU 129	0	0	-177286	0	0	0	0	0	0
impalcato 3	SLU 130	0	0	-344584	0	0	0	0	0	0
impalcato 3	SLU 131	0	0	-178373	0	0	0	0	0	0
impalcato 3	SLU 132	0	0	-345672	0	0	0	0	0	0
impalcato 3	SLE RA 1	0	0	-109366	0	0	0	0	0	0
impalcato 3	SLE RA 2	0	0	-258076	0	0	0	0	0	0
impalcato 3	SLE RA 3	0	0	-258801	0	0	0	0	0	0
impalcato 3	SLE RA 4	0	0	-111178	0	0	0	0	0	0
impalcato 3	SLE RA 5	0	0	-222711	0	0	0	0	0	0
impalcato 3	SLE RA 6	0	0	-261663	0	0	0	0	0	0
impalcato 3	SLE RA 7	0	0	-262388	0	0	0	0	0	0
impalcato 3	SLE RA 8	0	0	-114765	0	0	0	0	0	0
impalcato 3	SLE RA 9	0	0	-226298	0	0	0	0	0	0
impalcato 3	SLE RA 10	0	0	-116540	0	0	0	0	0	0
impalcato 3	SLE RA 11	0	0	-228072	0	0	0	0	0	0
impalcato 3	SLE RA 12	0	0	-117265	0	0	0	0	0	0

Livello	Cont.	Totale			Aste verticali			Pareti		
Nome	N.br.	F			F			F		
		X	Y	Z	X	Y	Z	X	Y	Z
impalcato 3	SLE RA 13	0	0	-228797	0	0	0	0	0	0
impalcato 3	SLE RA 14	0	0	-266004	0	0	0	0	0	0
impalcato 3	SLE RA 15	0	0	-266729	0	0	0	0	0	0
impalcato 3	SLE RA 16	0	0	-119106	0	0	0	0	0	0
impalcato 3	SLE RA 17	0	0	-230639	0	0	0	0	0	0
impalcato 3	SLE RA 18	0	0	-269590	0	0	0	0	0	0
impalcato 3	SLE RA 19	0	0	-270315	0	0	0	0	0	0
impalcato 3	SLE RA 20	0	0	-122693	0	0	0	0	0	0
impalcato 3	SLE RA 21	0	0	-234226	0	0	0	0	0	0
impalcato 3	SLE RA 22	0	0	-124468	0	0	0	0	0	0
impalcato 3	SLE RA 23	0	0	-236000	0	0	0	0	0	0
impalcato 3	SLE RA 24	0	0	-125193	0	0	0	0	0	0
impalcato 3	SLE RA 25	0	0	-236725	0	0	0	0	0	0
impalcato 3	SLE RA 26	0	0	-129186	0	0	0	0	0	0
impalcato 3	SLE RA 27	0	0	-240718	0	0	0	0	0	0
impalcato 3	SLE RA 28	0	0	-129911	0	0	0	0	0	0
impalcato 3	SLE RA 29	0	0	-241443	0	0	0	0	0	0
impalcato 3	SLE RA 30	0	0	-132772	0	0	0	0	0	0
impalcato 3	SLE RA 31	0	0	-244305	0	0	0	0	0	0
impalcato 3	SLE RA 32	0	0	-133498	0	0	0	0	0	0
impalcato 3	SLE RA 33	0	0	-245030	0	0	0	0	0	0
impalcato 3	SLE FR 1	0	0	-109366	0	0	0	0	0	0
impalcato 3	SLE FR 2	0	0	-220898	0	0	0	0	0	0
impalcato 3	SLE FR 3	0	0	-110091	0	0	0	0	0	0
impalcato 3	SLE FR 4	0	0	-110801	0	0	0	0	0	0
impalcato 3	SLE FR 5	0	0	-117294	0	0	0	0	0	0
impalcato 3	SLE QP 1	0	0	-109366	0	0	0	0	0	0
impalcato 3	SLO 1	-5849	-209	-109366	0	0	0	0	0	0
impalcato 3	SLO 2	-5849	-209	-109366	0	0	0	0	0	0
impalcato 3	SLO 3	-5849	209	-109366	0	0	0	0	0	0
impalcato 3	SLO 4	-5849	209	-109366	0	0	0	0	0	0
impalcato 3	SLO 5	-1755	-696	-109366	0	0	0	0	0	0
impalcato 3	SLO 6	-1755	-696	-109366	0	0	0	0	0	0
impalcato 3	SLO 7	-1755	696	-109366	0	0	0	0	0	0
impalcato 3	SLO 8	-1755	696	-109366	0	0	0	0	0	0
impalcato 3	SLO 9	1755	-696	-109366	0	0	0	0	0	0
impalcato 3	SLO 10	1755	-696	-109366	0	0	0	0	0	0
impalcato 3	SLO 11	1755	696	-109366	0	0	0	0	0	0
impalcato 3	SLO 12	1755	696	-109366	0	0	0	0	0	0
impalcato 3	SLO 13	5849	-209	-109366	0	0	0	0	0	0
impalcato 3	SLO 14	5849	-209	-109366	0	0	0	0	0	0
impalcato 3	SLO 15	5849	209	-109366	0	0	0	0	0	0
impalcato 3	SLO 16	5849	209	-109366	0	0	0	0	0	0
impalcato 3	SLD 1	-4803	-193	-109366	0	0	0	0	0	0
impalcato 3	SLD 2	-4803	-193	-109366	0	0	0	0	0	0
impalcato 3	SLD 3	-4803	193	-109366	0	0	0	0	0	0
impalcato 3	SLD 4	-4803	193	-109366	0	0	0	0	0	0
impalcato 3	SLD 5	-1441	-643	-109366	0	0	0	0	0	0
impalcato 3	SLD 6	-1441	-643	-109366	0	0	0	0	0	0
impalcato 3	SLD 7	-1441	643	-109366	0	0	0	0	0	0
impalcato 3	SLD 8	-1441	643	-109366	0	0	0	0	0	0
impalcato 3	SLD 9	1441	-643	-109366	0	0	0	0	0	0
impalcato 3	SLD 10	1441	-643	-109366	0	0	0	0	0	0
impalcato 3	SLD 11	1441	643	-109366	0	0	0	0	0	0
impalcato 3	SLD 12	1441	643	-109366	0	0	0	0	0	0
impalcato 3	SLD 13	4803	-193	-109366	0	0	0	0	0	0
impalcato 3	SLD 14	4803	-193	-109366	0	0	0	0	0	0
impalcato 3	SLD 15	4803	193	-109366	0	0	0	0	0	0
impalcato 3	SLD 16	4803	193	-109366	0	0	0	0	0	0
impalcato 3	SLV 1	-10568	-509	-109366	0	0	0	0	0	0
impalcato 3	SLV 2	-10568	-509	-109366	0	0	0	0	0	0
impalcato 3	SLV 3	-10568	509	-109366	0	0	0	0	0	0
impalcato 3	SLV 4	-10568	509	-109366	0	0	0	0	0	0
impalcato 3	SLV 5	-3171	-1697	-109366	0	0	0	0	0	0
impalcato 3	SLV 6	-3171	-1697	-109366	0	0	0	0	0	0
impalcato 3	SLV 7	-3171	1697	-109366	0	0	0	0	0	0
impalcato 3	SLV 8	-3171	1697	-109366	0	0	0	0	0	0
impalcato 3	SLV 9	3171	-1697	-109366	0	0	0	0	0	0
impalcato 3	SLV 10	3171	-1697	-109366	0	0	0	0	0	0
impalcato 3	SLV 11	3171	1697	-109366	0	0	0	0	0	0
impalcato 3	SLV 12	3171	1697	-109366	0	0	0	0	0	0
impalcato 3	SLV 13	10568	-509	-109366	0	0	0	0	0	0
impalcato 3	SLV 14	10568	-509	-109366	0	0	0	0	0	0
impalcato 3	SLV 15	10568	509	-109366	0	0	0	0	0	0
impalcato 3	SLV 16	10568	509	-109366	0	0	0	0	0	0
impalcato 3	CRTFP Ux+	0	0	0	0	0	0	0	0	0
impalcato 3	CRTFP Ux-	0	0	0	0	0	0	0	0	0
impalcato 3	CRTFP Uy+	0	0	0	0	0	0	0	0	0
impalcato 3	CRTFP Uy-	0	0	0	0	0	0	0	0	0
impalcato 3	CRTFP Rz+	0	0	0	0	0	0	0	0	0
impalcato 3	CRTFP Rz-	0	0	0	0	0	0	0	0	0

8.5 RISPOSTA MODALE

***Modo**: identificativo del modo di vibrare.*
***Periodo**: periodo. [s]*
***Massa X**: massa partecipante in direzione globale X. Il valore è adimensionale.*
***Massa Y**: massa partecipante in direzione globale Y. Il valore è adimensionale.*

***Massa Z**: massa partecipante in direzione globale Z. Il valore è adimensionale.*
***Massa rot. X**: massa rotazionale partecipante attorno la direzione globale X. Il valore è adimensionale.*
***Massa rot. Y**: massa rotazionale partecipante attorno la direzione globale Y. Il valore è adimensionale.*
***Massa rot. Z**: massa rotazionale partecipante attorno la direzione globale Z. Il valore è adimensionale.*
***Massa sX**: massa partecipante in direzione Sisma X. Il valore è adimensionale.*
***Massa sY**: massa partecipante in direzione Sisma Y. Il valore è adimensionale.*

Totale masse partecipanti:

Traslazione X: 0.984853
Traslazione Y: 0.555945
Traslazione Z: 0
Rotazione X: 0.810555
Rotazione Y: 0.939736
Rotazione Z: 0.670724

Modo	Periodo	Massa X	Massa Y	Massa Z	Massa rot. X	Massa rot. Y	Massa rot. Z	Massa sX	Massa sY
1	1.885553965	0	0.555945398	0	0.810555442	0	0.041087247	0	0.555945398
2	0.214851768	0.524721072	0	0	0	0.527694389	0.33546305	0.524721072	0
3	0.06525248	0.460132027	0	0	0	0.412041174	0.294173832	0.460132027	0

8.6 EQUILIBRIO GLOBALE FORZE

***Contributo**: Nome attribuito al sistema risultante.*
***Fx**: Componente X di forza del sistema risultante. [daN]*
***Fy**: Componente Y di forza del sistema risultante. [daN]*
***Fz**: Componente Z di forza del sistema risultante. [daN]*
***Mx**: Componente di momento attorno l'asse X del sistema risultante. [daN*cm]*
***My**: Componente di momento attorno l'asse Y del sistema risultante. [daN*cm]*
***Mz**: Componente di momento attorno l'asse Z del sistema risultante. [daN*cm]*

Bilancio in condizione di carico: Pesi strutturali

Contributo	Fx	Fy	Fz	Mx	My	Mz
Forze applicate	0	0	-406452.635	-406452635	138193896	0
Reazioni	0	0	406452.635	406452635	-138193896	0
P-Delta	0	0	0	0	0	0
Totale	0	0	0	0	0	0

Bilancio in condizione di carico: Eccezione SdC3

Contributo	Fx	Fy	Fz	Mx	My	Mz
Forze applicate	0	0	-60137.642	-36207833	20494190	0
Reazioni	0	0	60137.642	36207833	-20494190	0
P-Delta	0	0	0	0	0	0
Totale	0	0	0	0	0	0

Bilancio in condizione di carico: Neve

Contributo	Fx	Fy	Fz	Mx	My	Mz
Forze applicate	0	0	-26658.895	-27350413	9086772	0
Reazioni	0	0	26658.895	27350413	-9086772	0
P-Delta	0	0	0	0	0	0
Totale	0	0	0	0	0	0

Bilancio in condizione di carico: Eccezionale SdC4

Contributo	Fx	Fy	Fz	Mx	My	Mz
Forze applicate	0	0	-3625.155	-6162764	1232553	0
Reazioni	0	0	3625.155	6162764	-1232553	0
P-Delta	0	0	0	0	0	0
Totale	0	0	0	0	0	0

Bilancio in condizione di carico: Eccezionale SdC1

Contributo	Fx	Fy	Fz	Mx	My	Mz
Forze applicate	0	0	-315961.01	-333518496	107426743	0
Reazioni	0	0	315961.01	333518496	-107426743	0
P-Delta	0	0	0	0	0	0
Totale	0	0	0	0	0	0

Bilancio in condizione di carico: Sisma X SLV

Contributo	Fx	Fy	Fz	Mx	My	Mz
Forze applicate	55948.574	0	0	0	8198584	-55948574
Reazioni	-55948.574	0	0	0	-8198584	55948574
P-Delta	0	0	0	0	0	0
Totale	0	0	0	0	0	0

Bilancio in condizione di carico: Sisma Y SLV

Contributo	Fx	Fy	Fz	Mx	My	Mz
Forze applicate	0	10271.69	0	-1505191	0	3492375
Reazioni	0	-10271.69	0	1505191	0	-3492375
P-Delta	0	0	0	0	0	0
Totale	0	0	0	0	0	0

Bilancio in condizione di carico: Sisma X SLD

Contributo	Fx	Fy	Fz	Mx	My	Mz
Forze applicate	25044.023	0	0	0	3669897	-25044023
Reazioni	-25044.023	0	0	0	-3669897	25044023
P-Delta	0	0	0	0	0	0
Totale	0	0	0	0	0	0

Bilancio in condizione di carico: Sisma Y SLD

Contributo	Fx	Fy	Fz	Mx	My	Mz
Forze applicate	0	3892.531	0	-570403	0	1323461
Reazioni	0	-3892.531	0	570403	0	-1323461
P-Delta	0	0	0	0	0	0
Totale	0	0	0	0	0	0

Bilancio in condizione di carico: Sisma X SLO

Contributo	Fx	Fy	Fz	Mx	My	Mz
Forze applicate	30521.66	0	0	0	4472578	-30521660
Reazioni	-30521.66	0	0	0	-4472578	30521660
P-Delta	0	0	0	0	0	0
Totale	0	0	0	0	0	0

Bilancio in condizione di carico: Sisma Y SLO

Contributo	Fx	Fy	Fz	Mx	My	Mz
Forze applicate	0	4212.917	0	-617352	0	1432392
Reazioni	0	-4212.917	0	617352	0	-1432392
P-Delta	0	0	0	0	0	0
Totale	0	0	0	0	0	0

Bilancio in condizione di carico: Rig. Ux

Contributo	Fx	Fy	Fz	Mx	My	Mz
Forze applicate	0	0	0	0	0	0
Reazioni	0	0	0	0	0	0
P-Delta	0	0	0	0	0	0
Totale	0	0	0	0	0	0

Bilancio in condizione di carico: Rig. Uy

Contributo	Fx	Fy	Fz	Mx	My	Mz
Forze applicate	0	0	0	0	0	0
Reazioni	0	0	0	0	0	0
P-Delta	0	0	0	0	0	0
Totale	0	0	0	0	0	0

Bilancio in condizione di carico: Rig. Rz

Contributo	Fx	Fy	Fz	Mx	My	Mz
Forze applicate	0	0	0	0	0	0
Reazioni	0	0	0	0	0	0
P-Delta	0	0	0	0	0	0
Totale	0	0	0	0	0	0

8.7 RISPOSTA DI SPETTRO

***Spettro**: condizione elementare corrispondente allo spettro.*
***N.b.**: nome breve della condizione elementare.*
***Fx**: componente della forza lungo l'asse X. [daN]*
***Fy**: componente della forza lungo l'asse Y. [daN]*
***Fz**: componente della forza lungo l'asse Z. [daN]*
***Mx**: componente della coppia attorno all'asse X. [daN*cm]*
***My**: componente della coppia attorno all'asse Y. [daN*cm]*
***Mz**: componente della coppia attorno all'asse Z. [daN*cm]*
***Max X**: massima reazione lungo l'asse X.*
***Valore**: valore massimo della reazione. [daN]*
***Angolo**: angolo d'ingresso del sisma che provoca il valore massimo della reazione. [deg]*
***Max Y**: massima reazione lungo l'asse Y.*
***Valore**: valore massimo della reazione. [daN]*
***Angolo**: angolo d'ingresso del sisma che provoca il valore massimo della reazione. [deg]*
***Max Z**: massima reazione lungo l'asse Z.*
***Valore**: valore massimo della reazione. [daN]*
***Angolo**: angolo d'ingresso del sisma che provoca il valore massimo della reazione. [deg]*

Spettro	Fx	Fy	Fz	Mx	My	Mz	Max X		Max Y		Max Z	
N.b.							Valore	Angolo	Valore	Angolo	Valore	Angolo

8.8 ANNOTAZIONI SOLUTORE

***Informazioni**: informazioni fornite dal solutore al termine del calcolo del modello.*

Informazioni

8.9 STATISTICHE SOLUZIONE

Tipo di equazioni	Lineari
Tecnica di soluzione	Intel MKL PARDISO
Numero equazioni	666
Elemento min. diagonale	1760.74816299
Elemento max diagonale	788878869.829053
Rapporto max/min	448036.17371976
Elementi non nulli	11223

9 VERIFICHE

9.1 VERIFICHE SUPERELEMENTI ASTE ACCIAIO LAMINATE

Le unità di misura elencate nel capitolo sono in [cm, daN, deg] ove non espressamente specificato.

Sezione: *sezione in acciaio.*
Rotazione: *rotazione della sezione. [deg]*
Area: *area inerziale nel sistema geometrico centrato nel baricentro. [cm²]*
Jx: *momento d'inerzia attorno all'asse orizzontale baricentrico di definizione della sezione. [cm4]*
Jy: *momento d'inerzia attorno all'asse verticale baricentrico di definizione della sezione. [cm4]*
ix: *raggio di inerzia relativo all'asse x. [cm]*
iy: *raggio di inerzia relativo all'asse y. [cm]*
Wx: *modulo di resistenza elastico minimo relativo all'asse x. [cm³]*
Wy: *modulo di resistenza elastico minimo relativo all'asse y. [cm³]*
Wplx: *modulo di resistenza plastico relativo all'asse x. [cm³]*
Wply: *modulo di resistenza plastico relativo all'asse y. [cm³]*
X: *distanza dal nodo iniziale. [cm]*
Comb.: *combinazione di verifica.*
Sfruttamento: *rapporto di sfruttamento per la verifica in esame, inverso del coefficiente di sicurezza. Verificato se minore o uguale di 1.*
Classe: *classe della sezione.*
NEd: *sollecitazione assiale. [daN]*
Nc,Rd: *resistenza assiale a compressione ridotta per taglio. [daN]*
Nt,Rd: *resistenza assiale a trazione ridotta per taglio. [daN]*
Riduzione da taglio: *rapporto tra la resistenza assiale ridotta per taglio e la resistenza assiale.*
ρx: *coefficiente di riduzione della resistenza di snervamento per taglio in direzione x.*
ρy: *coefficiente di riduzione della resistenza di snervamento per taglio in direzione y.*
Verifica: *stato di verifica.*
VEd: *sollecitazione di taglio. [daN]*
Vc,Rd: *resistenza a taglio. [daN]*
Av: *area resistenza a taglio. [cm²]*
Interazione taglio-torsione: *indica se è possibile ridurre il taglio resistente per presenza di torsione.*
Riduzione torsione: *coefficiente riduttivo della resistenza a taglio per presenza di torsione.*
Sfruttamento torsione: *rapporto tra TEd e TRd.*
TEd: *sollecitazione torcente. [daN*cm]*
TRd: *resistenza a torsione. [daN*cm]*
Riduzione taglio resistente: *indica se è possibile ridurre il taglio resistente per presenza di torsione.*
Sfruttamento taglio-torsione: *τEd,totale / (0.5 * τRd). Non verificato se maggiore di 1.*
τEd,totale: *somma delle tensioni tangenziali totale derivanti da taglio e torsione. [daN/cm²]*
τRd: *tensione tangenziale resistente. [daN/cm²]*
Mx,Ed: *sollecitazione flettente attorno x-x. [daN*cm]*
Mx,Rd: *resistenza a flessione attorno x-x ridotta per taglio. [daN*cm]*
Rid. Mx,Rd da VEd: *rapporto tra la resistenza flettente ridotta per taglio e la resistenza flettente attorno x-x.*
NRd: *resistenza assiale ridotta per taglio. [daN]*
Rid. NRd da VEd: *rapporto tra la resistenza assiale ridotta per taglio e la resistenza assiale.*
Mx,Rd: *resistenza a flessione attorno x-x ridotta. [daN*cm]*
Rid. Mx,Rd da NEd: *rapporto tra la resistenza flettente ridotta per sforzo normale e taglio e la resistenza flettente ridotta per taglio attorno x-x.*
Numero rit.: *numero del ritegno.*
Presente: *indica se il ritegno è presente o meno.*
Ascissa: *ascissa del ritegno rispetto al nodo iniziale del superelemento o ascissa iniziale e finale della campata. [cm]*
Campata: *campata tra i ritegni.*
βx/m: *coefficiente di lunghezza efficace per rotazione attorno a x/m.*
Vincolo a entrambi estremi: *indica se il tratto è vincolato a entrambi gli estremi.*
λx/m: *snellezza attorno a x/m del tratto tra i due ritegni.*
λVer: *snellezza accettabile.*
βy/n: *coefficiente di lunghezza efficace per rotazione attorno a y/n.*
k,LT: *coefficiente di lunghezza efficace per rotazione nel calcolo del momento critico ENV1993-1-1 F 1.2(3).*
kw,LT: *coefficiente di lunghezza efficace per ingobbamento nel calcolo del momento critico ENV1993-1-1 F 1.2(4).*

***λy/n**: snellezza attorno a y/n del tratto tra i due ritegni.*
***Obblig.**: indica se la verifica è obbligatoria da norma.*
***Mb,Rd,x**: momento resistente di progetto per l'instabilità per sollecitazione flettente attorno l'asse x-x. [daN*cm]*
***χ,LT**: coefficiente di riduzione per instabilità flesso-torsionale.*
***λ adim. LT**: snellezza adimensionale per instabilità flesso-torsionale.*
***L,LT**: distanza tra due ritegni torsionali. [cm]*
***M,critico**: momento critico. [daN*cm]*
***Mx,Eff,Ed**: momento interno efficace di verifica attorno x-x secondo ENV1993-1-1 §5.5.3. [daN*cm]*
***NRk**: resistenza caratteristica assiale. [daN]*
***Mx,Ed max**: momento sollecitante massimo attorno l'asse x-x tra due ritegni all'inflessione attorno x-x. [daN*cm]*
***Mx,Rk**: resistenza caratteristica a flessione attorno l'asse x-x. [daN*cm]*
***My,Ed max**: momento sollecitante massimo attorno l'asse y-y tra due ritegni all'inflessione attorno y-y. [daN*cm]*
***My,Rk**: resistenza caratteristica a flessione attorno l'asse y-y. [daN*cm]*
***χ,x**: coefficiente di riduzione per inflessione attorno l'asse x-x.*
***χ,y**: coefficiente di riduzione per inflessione attorno l'asse y-y.*
***kxx**: valore di kxx.*
***kxy**: valore di kxy.*
***kyx**: valore di kyx.*
***kyy**: valore di kyy.*
***η**: valore di η.*
***hw**: altezza dell'anima. [cm]*
***tw**: spessore dell'anima. [cm]*
***hw/tw max**: rapporto tra hw e tw massimo.*
***Ascissa freccia**: ascissa della massima freccia. [cm]*
***Combinazione**: combinazione di verifica in cui è ricavata la freccia.*
***Freccia**: massima freccia. [cm]*
***Luce**: luce di verifica. [cm]*
***L/f**: rapporto luce su freccia.*
***L/f,min**: minimo rapporto luce su freccia consentito.*
***Tipo**: freccia calcolata considerando le sole condizioni variabili o tutte le condizioni (totale) all'interno della combinazione di verifica.*
***My,Ed**: sollecitazione flettente attorno y-y. [daN*cm]*
***My,Rd**: resistenza a flessione attorno y-y ridotta. [daN*cm]*
***Rid. My,Rd da VEd**: rapporto tra la resistenza flettente ridotta per taglio e la resistenza flettente attorno y-y.*
***Rid. My,Rd da NEd**: rapporto tra la resistenza flettente ridotta per sforzo normale e taglio e la resistenza flettente ridotta per taglio attorno y-y.*
***α**: esponente α per flessione deviata.*
***β**: esponente β per flessione deviata.*
***kLT**: valore di kLT.*
***ky**: valore di ky.*
***Wx**: modulo resistente della sezione per inflessione attorno all'asse x-x. [cm³]*
***Wy**: modulo resistente della sezione per inflessione attorno all'asse y-y. [cm³]*
***MxEq,Ed**: momento sollecitante equivalente attorno l'asse x-x tra due ritegni all'inflessione attorno x-x. [daN*cm]*
***MyEq,Ed**: momento sollecitante massimo attorno l'asse y-y tra due ritegni all'inflessione attorno y-y. [daN*cm]*
***Area**: area della sezione. [cm²]*
***χ,min**: coefficiente di riduzione minimo.*
***λ adim. x/m**: snellezza adimensionale per inflessione attorno l'asse x-x / m-m.*
***λ adim. y/n**: snellezza adimensionale per inflessione attorno l'asse y-y / n-n.*
***N,crit x/m**: carico critico per inflessione attorno all'asse x-x / m-m. [daN]*
***N,crit y/n**: carico critico per inflessione attorno all'asse y-y / n-n. [daN]*

Superelemento in acciaio composto dall'asta 1

Caratteristiche del materiale

Acciaio: S275, fyk = 2750

Caratteristiche geometriche

Lunghezza: 108.7
Nodo iniziale: 2 Nodo finale: 24
Cerniera iniziale: No Cerniera finale: No
Sovraresistenza: 0% Sisma Z: No

Caratteristiche della sezione

Sezione	Rotazione	Area	Jx	Jy	ix	iy	Wx	Wy	Wplx	Wply
HEA180	0	45.3	2512.55	924.65	7.45	4.52	293.87	102.74	325.17	156.53

Verifiche di resistenza

Verifiche a forza assiale §4.2.4.1.2.1 - §4.2.4.1.2.2 NTC18

X	Comb.	Sfruttamento	Classe	NEd	Nc,Rd	Nt,Rd	Riduzione da taglio	ρx	ρy	Verifica
0	SLU 130	0.28	1	-33235.2	118634.3		1	0	0	Si

Verifiche a forza assiale SLD §4.2.4.1.2.1 - §4.2.4.1.2.2 NTC18

X	Comb.	Sfruttamento	Classe	NEd	Nc,Rd	Nt,Rd	Riduzione da taglio	ρx	ρy	Verifica
0	SLD 9	0.16	1	-18931.6	118634.3		1	0	0	Si

Verifica a taglio X §4.2.4.1.2.4 NTC18

X	Comb.	Sfruttamento	VEd	Vc,Rd	Av	Interazione taglio-torsione	Riduzione torsione	Verifica
101.4	SLV 12	0.002	-120.4	54066.9	36.18	Considerata	0.99	Si

Verifica a taglio X SLD §4.2.4.1.2.4 NTC18

X	Comb.	Sfruttamento	VEd	Vc,Rd	Av	Interazione taglio-torsione	Riduzione torsione	Verifica
108.7	SLD 12	0.001	-46.5	54458	36.18	Considerata	1	Si

Verifica a taglio Y §4.2.4.1.2.4 NTC18

X	Comb.	Sfruttamento	VEd	Vc,Rd	Av	Interazione taglio-torsione	Riduzione torsione	Verifica
108.7	SLU 98	0.09	-1984.2	21944.5	14.52	Considerata	1	Si

Verifica a taglio Y SLD §4.2.4.1.2.4 NTC18

X	Comb.	Sfruttamento	VEd	Vc,Rd	Av	Interazione taglio-torsione	Riduzione torsione	Verifica
108.7	SLD 3	0.071	-1545.4	21919.6	14.52	Considerata	1	Si

Verifica a torsione §4.2.4.1.2.5 NTC18

X	Comb.	Sfruttamento torsione	TEd	TRd	Riduzione taglio resistente	Sfruttamento taglio-torsione	τEd,totale	τRd	Verifica
108.7	SLV 12	0.029	523.7	18118.1	Considerata				Si

Verifica a torsione SLD §4.2.4.1.2.5 NTC18

X	Comb.	Sfruttamento torsione	TEd	TRd	Riduzione taglio resistente	Sfruttamento taglio-torsione	τEd,totale	τRd	Verifica
50.7	SLD 12	0.011	202.5	18118.1	Considerata				Si

Verifica a presso/tenso flessione retta X §§ 4.2.4.1.2.3 - 4.2.4.1.2.6 - 4.2.4.1.2.7 - 4.2.4.1.2.8 NTC18

Verifiche eseguite utilizzando la formula conservativa (6.2) §6.2.1 EN 1993-1-1:2005.

X	Comb.	Sfruttamento	Classe	NEd	NRd	Rid. NRd da VEd	Mx,Ed	Mx,Rd	Rid. Mx,Rd da VEd	Rid. Mx,Rd da NEd	ρx	ρy	Verifica
25.4	SLU 130	0.291	1	-31473.3	118634.3	1	-21550	851642	1		0	0	Si

Verifica a presso/tenso flessione retta X SLD §§ 4.2.4.1.2.3 - 4.2.4.1.2.6 - 4.2.4.1.2.7 - 4.2.4.1.2.8 NTC18

Verifiche eseguite utilizzando la formula conservativa (6.2) §6.2.1 EN 1993-1-1:2005.

X	Comb.	Sfruttamento	Classe	NEd	NRd	Rid. NRd da VEd	Mx,Ed	Mx,Rd	Rid. Mx,Rd da VEd	Rid. Mx,Rd da NEd	ρx	ρy	Verifica
10.9	SLD 14	0.166	1	-18346.2	118634.3	1	-9899	851642	1		0	0	Si

Verifica a presso/tenso flessione retta Y §§ 4.2.4.1.2.3 - 4.2.4.1.2.6 - 4.2.4.1.2.7 - 4.2.4.1.2.8 NTC18

Verifiche eseguite utilizzando la formula conservativa (6.2) §6.2.1 EN 1993-1-1:2005.

X	Comb.	Sfruttamento	Classe	NEd	NRd	Rid. NRd da VEd	My,Ed	My,Rd	Rid. My,Rd da VEd	Rid. My,Rd da NEd	ρx	ρy	Verifica
83.3	SLU 95	0.227	1	-26887.3	118634.3	1	-181	409967	1		0	0	Si

Verifica a presso/tenso flessione retta Y SLD §§ 4.2.4.1.2.3 - 4.2.4.1.2.6 - 4.2.4.1.2.7 - 4.2.4.1.2.8 NTC18

Verifiche eseguite utilizzando la formula conservativa (6.2) §6.2.1 EN 1993-1-1:2005.

X	Comb.	Sfruttamento	Classe	NEd	NRd	Rid. NRd da VEd	My,Ed	My,Rd	Rid. My,Rd da VEd	Rid. My,Rd da NEd	ρx	ρy	Verifica
0	SLD 9	0.16	1	-18931.6	118634.3	1	-174	409967	1		0	0	Si

Verifica a presso/tenso flessione deviata §§ 4.2.4.1.2.3 - 4.2.4.1.2.6 - 4.2.4.1.2.7 - 4.2.4.1.2.8 NTC18

Verifiche eseguite utilizzando la formula conservativa (6.2) §6.2.1 EN 1993-1-1:2005.

X	Comb.	Sfruttamento	Classe	NEd	NRd	Rid. NRd da VEd	Mx,Ed	Mx,Rd	My,Ed	My,Rd	Rid. Mx,Rd da VEd	Rid. Mx,Rd da NEd	Rid. My,Rd da VEd	Rid. My,Rd da NEd	α	β	ρx	ρy	Verifica
50.7	SLU 99	0.279	1	-29711.4	118634.3	1	-24130	851642	-110	409967	1		1				0	0	Si

Verifica a presso/tenso flessione deviata SLD §§ 4.2.4.1.2.3 - 4.2.4.1.2.6 - 4.2.4.1.2.7 - 4.2.4.1.2.8 NTC18

Verifiche eseguite utilizzando la formula conservativa (6.2) §6.2.1 EN 1993-1-1:2005.

X	Comb.	Sfruttamento	Classe	NEd	NRd	Rid. NRd da VEd	Mx,Ed	Mx,Rd	My,Ed	My,Rd	Rid. Mx,Rd da VEd	Rid. Mx,Rd da NEd	Rid. My,Rd da VEd	Rid. My,Rd da NEd	α	β	ρx	ρy	Verifica
32.6	SLD 10	0.172	1	-17189.1	118634.3	1	-20403	851642	1254	409967	1		1				0	0	Si

Verifiche ad instabilità

Caratteristiche iniziali

Membratura principale per controllo snellezza; Calcolo di snellezze ed N critici condotti secondo gli assi principali;
Curva X: b; Curva Y: c; Svergolamento: Carico all'estradosso; Curva svergolamento: b;

Dati per instabilità attorno a x

Numero rit.	Presente	Ascissa	Campata	βx/m	Vincolo a entrambi estremi	λx/m	λVer
1	Si	0					
			1-2	1	Si	14.6	Si, (<200)
2	Si	108.7					

Dati per instabilità attorno a y

Numero rit.	Presente	Ascissa	Campata	βy/n	k,LT	kw,LT	Vincolo a entrambi estremi	λy/n	λVer
1	Si	0							
			1-2	1	1	1	Si	24	Si, (<200)
2	Si	108.7							

Verifica di stabilità per pressoflessione §C.4.2.4.1.3.3.2 NTC18

X	Comb.	Sfruttamento	Classe	NEd	NRk	Mx,Ed max	Mx,Rk	My,Ed max	My,Rk	χ,x	χ,y	kxx	kxy	kyx	kyy	χ,LT	Verifica
0	SLU 132	0.334	1	-33235.2	124566	41263.2	894223.7	241	430465.2	1	0.961	0.54	0.351	0.877	0.585	1	Si

Verifica di stabilità per pressoflessione SLD §C.4.2.4.1.3.3.2 NTC18

X	Comb.	Sfruttamento	Classe	NEd	NRk	Mx,Ed max	Mx,Rk	My,Ed max	My,Rk	χ,x	χ,y	kxx	kxy	kyx	kyy	χ,LT	Verifica
0	SLD 6	0.203	1	-18892.1	124566	29430.1	894223.7	4591	430465.2	1	0.961	0.608	0.348	0.877	0.58	1	Si

Verifica di stabilità a taglio anima Y §4.2.4.1.2.4 [4.2.27] NTC18

η	hw	tw	hw/tw max	Verifica
1.2	15.2	0.6	55.46	Si

Verifica di stabilità a taglio anima Y SLD §4.2.4.1.2.4 [4.2.27] NTC18

η	hw	tw	hw/tw max	Verifica
1.2	15.2	0.6	55.46	Si

Verifiche a deformabilità

Mensola X: No; Mensola Y: No.

Frecce lungo X

Ascissa freccia	Combinazione	Freccia	Luce	L/f	L/f,min	Tipo	Verifica
61.6	SLE RA 1	0	108.7	10000	250	Totale	Si
61.6	SLE RA 31	0	108.7	10000	250	Totale	Si
61.6	SLE RA 30	0	108.7	10000	250	Totale	Si
61.6	SLE RA 29	0	108.7	10000	250	Totale	Si
61.6	SLE RA 28	0	108.7	10000	250	Totale	Si
61.6	SLE RA 2	0	108.7	10000	350	Variabile	Si
61.6	SLE RA 31	0	108.7	10000	350	Variabile	Si
61.6	SLE RA 30	0	108.7	10000	350	Variabile	Si
61.6	SLE RA 29	0	108.7	10000	350	Variabile	Si
61.6	SLE RA 28	0	108.7	10000	350	Variabile	Si

Frecce lungo Y

Ascissa freccia	Combinazione	Freccia	Luce	L/f	L/f,min	Tipo	Verifica
50.7	SLE RA 1	-0.008	108.7	10000	250	Totale	Si
50.7	SLE RA 31	-0.008	108.7	10000	250	Totale	Si
50.7	SLE RA 30	-0.008	108.7	10000	250	Totale	Si
50.7	SLE RA 29	-0.008	108.7	10000	250	Totale	Si
50.7	SLE RA 28	-0.008	108.7	10000	250	Totale	Si
61.6	SLE RA 2	0	108.7	10000	350	Variabile	Si
61.6	SLE RA 31	0.001	108.7	10000	350	Variabile	Si
61.6	SLE RA 30	0.001	108.7	10000	350	Variabile	Si
61.6	SLE RA 29	0	108.7	10000	350	Variabile	Si
61.6	SLE RA 28	0	108.7	10000	350	Variabile	Si

Superelemento in acciaio composto dall'asta 2

Caratteristiche del materiale

Acciaio: S275, fyk = 2750

Caratteristiche geometriche

Lunghezza: 108.7
Nodo iniziale: 3 Nodo finale: 27
Cerniera iniziale: No Cerniera finale: No
Sovraresistenza: 0% Sisma Z: No

Caratteristiche della sezione

Sezione	Rotazione	Area	Jx	Jy	ix	iy	Wx	Wy	Wplx	Wply
HEA180	0	45.3	2512.55	924.65	7.45	4.52	293.87	102.74	325.17	156.53

Verifiche di resistenza

Verifiche a forza assiale §4.2.4.1.2.1 - §4.2.4.1.2.2 NTC18

X	Comb.	Sfruttamento	Classe	NEd	Nc,Rd	Nt,Rd	Riduzione da taglio	ρx	ρy	Verifica
0	SLU 130	0.28	1	-33232	118634.3		1	0	0	Si

Verifiche a forza assiale SLD §4.2.4.1.2.1 - §4.2.4.1.2.2 NTC18

X	Comb.	Sfruttamento	Classe	NEd	Nc,Rd	Nt,Rd	Riduzione da taglio	ρx	ρy	Verifica
0	SLD 5	0.16	1	-18931.6	118634.3		1	0	0	Si

Verifica a taglio X §4.2.4.1.2.4 NTC18

X	Comb.	Sfruttamento	VEd	Vc,Rd	Av	Interazione taglio-torsione	Riduzione torsione	Verifica
108.7	SLV 8	0.002	120.4	54066.9	36.18	Considerata	0.99	Si

Verifica a taglio X SLD §4.2.4.1.2.4 NTC18

X	Comb.	Sfruttamento	VEd	Vc,Rd	Av	Interazione taglio-torsione	Riduzione torsione	Verifica
108.7	SLD 8	0.001	46.5	54458	36.18	Considerata	1	Si

Verifica a taglio Y §4.2.4.1.2.4 NTC18

X	Comb.	Sfruttamento	VEd	Vc,Rd	Av	Interazione taglio-torsione	Riduzione torsione	Verifica
108.7	SLU 131	0.09	-1984.2	21944.4	14.52	Considerata	1	Si

Verifica a taglio Y SLD §4.2.4.1.2.4 NTC18

X	Comb.	Sfruttamento	VEd	Vc,Rd	Av	Interazione taglio-torsione	Riduzione torsione	Verifica
108.7	SLD 16	0.071	-1545.4	21919.6	14.52	Considerata	1	Si

Verifica a torsione §4.2.4.1.2.5 NTC18

X	Comb.	Sfruttamento torsione	TEd	TRd	Riduzione taglio resistente	Sfruttamento taglio-torsione	τEd,totale	τRd	Verifica
108.7	SLV 8	0.029	-523.7	18118.1	Considerata				Si

Verifica a torsione SLD §4.2.4.1.2.5 NTC18

X	Comb.	Sfruttamento torsione	TEd	TRd	Riduzione taglio resistente	Sfruttamento taglio-torsione	τEd,totale	τRd	Verifica
108.7	SLD 8	0.011	-202.5	18118.1	Considerata				Si

Verifica a presso/tenso flessione retta X §§ 4.2.4.1.2.3 - 4.2.4.1.2.6 - 4.2.4.1.2.7 - 4.2.4.1.2.8 NTC18

Verifiche eseguite utilizzando la formula conservativa (6.2) §6.2.1 EN 1993-1-1:2005.

X	Comb.	Sfruttamento	Classe	NEd	NRd	Rid. NRd da VEd	Mx,Ed	Mx,Rd	Rid. Mx,Rd da VEd	Rid. Mx,Rd da NEd	ρx	ρy	Verifica
25.4	SLU 97	0.291	1	-31470.1	118634.3	1	-21550	851642	1		0	0	Si

Verifica a presso/tenso flessione retta X SLD §§ 4.2.4.1.2.3 - 4.2.4.1.2.6 - 4.2.4.1.2.7 - 4.2.4.1.2.8 NTC18

Verifiche eseguite utilizzando la formula conservativa (6.2) §6.2.1 EN 1993-1-1:2005.

X	Comb.	Sfruttamento	Classe	NEd	NRd	Rid. NRd da VEd	Mx,Ed	Mx,Rd	Rid. Mx,Rd da VEd	Rid. Mx,Rd da NEd	ρx	ρy	Verifica
10.9	SLD 1	0.166	1	-18346.2	118634.3	1	-9899	851642	1		0	0	Si

Verifica a presso/tenso flessione retta Y §§ 4.2.4.1.2.3 - 4.2.4.1.2.6 - 4.2.4.1.2.7 - 4.2.4.1.2.8 NTC18

Verifiche eseguite utilizzando la formula conservativa (6.2) §6.2.1 EN 1993-1-1:2005.

X	Comb.	Sfruttamento	Classe	NEd	NRd	Rid. NRd da VEd	My,Ed	My,Rd	Rid. My,Rd da VEd	Rid. My,Rd da NEd	ρx	ρy	Verifica
83.3	SLU 95	0.227	1	-26884.6	118634.3	1	181	409967	1		0	0	Si

Verifica a presso/tenso flessione retta Y SLD §§ 4.2.4.1.2.3 - 4.2.4.1.2.6 - 4.2.4.1.2.7 - 4.2.4.1.2.8 NTC18

Verifiche eseguite utilizzando la formula conservativa (6.2) §6.2.1 EN 1993-1-1:2005.

X	Comb.	Sfruttamento	Classe	NEd	NRd	Rid. NRd da VEd	My,Ed	My,Rd	Rid. My,Rd da VEd	Rid. My,Rd da NEd	ρx	ρy	Verifica
0	SLD 5	0.16	1	-18931.6	118634.3	1	174	409967	1		0	0	Si

Verifica a presso/tenso flessione deviata §§ 4.2.4.1.2.3 - 4.2.4.1.2.6 - 4.2.4.1.2.7 - 4.2.4.1.2.8 NTC18

Verifiche eseguite utilizzando la formula conservativa (6.2) §6.2.1 EN 1993-1-1:2005.

X	Comb.	Sfruttamento	Classe	NEd	NRd	Rid. NRd da VEd	Mx,Ed	Mx,Rd	My,Ed	My,Rd	Rid. Mx,Rd da VEd	Rid. Mx,Rd da NEd	Rid. My,Rd da VEd	Rid. My,Rd da NEd	α	β	ρx	ρy	Verifica
50.7	SLU 99	0.279	1	-29708.1	118634.3	1	-24130	851642	110	409967	1		1				0	0	Si

Verifica a presso/tenso flessione deviata SLD §§ 4.2.4.1.2.3 - 4.2.4.1.2.6 - 4.2.4.1.2.7 - 4.2.4.1.2.8 NTC18

Verifiche eseguite utilizzando la formula conservativa (6.2) §6.2.1 EN 1993-1-1:2005.

X	Comb.	Sfruttamento	Classe	NEd	NRd	Rid. NRd da VEd	Mx,Ed	Mx,Rd	My,Ed	My,Rd	Rid. Mx,Rd da VEd	Rid. Mx,Rd da NEd	Rid. My,Rd da VEd	Rid. My,Rd da NEd	α	β	ρx	ρy	Verifica
32.6	SLD 6	0.172	1	-17189.1	118634.3	1	-20403	851642	-1254	409967	1		1				0	0	Si

Verifiche ad instabilità

Caratteristiche iniziali

Membratura principale per controllo snellezza; Calcolo di snellezze ed N critici condotti secondo gli assi principali;
Curva X: b; Curva Y: c; Svergolamento: Carico all'estradosso; Curva svergolamento: b;

Dati per instabilità attorno a x

Numero rit.	Presente	Ascissa	Campata	βx/m	Vincolo a entrambi estremi	λx/m	λVer
1	Si	0					
			1-2	1	Si	14.6	Si, (<200)
2	Si	108.7					

Dati per instabilità attorno a y

Numero rit.	Presente	Ascissa	Campata	βy/n	k,LT	kw,LT	Vincolo a entrambi estremi	λy/n	λVer
1	Si	0							
			1-2	1	1	1	Si	24	Si, (<200)
2	Si	108.7							

Verifica di stabilità per pressoflessione §C.4.2.4.1.3.3.2 NTC18

X	Comb.	Sfruttamento	Classe	NEd	NRk	Mx,Ed max	Mx,Rk	My,Ed max	My,Rk	χ,x	χ,y	kxx	kxy	kyx	kyy	χ,LT	Verifica
0	SLU 132	0.334	1	-33232	124566	41262.4	894223.7	240.9	430465.2	1	0.961	0.54	0.351	0.877	0.585	1	Si

Verifica di stabilità per pressoflessione SLD §C.4.2.4.1.3.3.2 NTC18

X	Comb.	Sfruttamento	Classe	NEd	NRk	Mx,Ed max	Mx,Rk	My,Ed max	My,Rk	χ,x	χ,y	kxx	kxy	kyx	kyy	χ,LT	Verifica
0	SLD 10	0.203	1	-18892.1	124566	29430.1	894223.7	4591	430465.2	1	0.961	0.608	0.348	0.877	0.58	1	Si

Verifica di stabilità a taglio anima Y §4.2.4.1.2.4 [4.2.27] NTC18

η	hw	tw	hw/tw max	Verifica
1.2	15.2	0.6	55.46	Si

Verifica di stabilità a taglio anima Y SLD §4.2.4.1.2.4 [4.2.27] NTC18

η	hw	tw	hw/tw max	Verifica
1.2	15.2	0.6	55.46	Si

Verifiche a deformabilità

Mensola X: No; Mensola Y: No.

Frecce lungo X

Ascissa freccia	Combinazione	Freccia	Luce	L/f	L/f,min	Tipo	Verifica
61.6	SLE RA 1	0	108.7	10000	250	Totale	Si
61.6	SLE RA 31	0	108.7	10000	250	Totale	Si
61.6	SLE RA 30	0	108.7	10000	250	Totale	Si
61.6	SLE RA 29	0	108.7	10000	250	Totale	Si
61.6	SLE RA 28	0	108.7	10000	250	Totale	Si
61.6	SLE RA 2	0	108.7	10000	350	Variabile	Si
61.6	SLE RA 31	0	108.7	10000	350	Variabile	Si
61.6	SLE RA 30	0	108.7	10000	350	Variabile	Si
61.6	SLE RA 29	0	108.7	10000	350	Variabile	Si
61.6	SLE RA 28	0	108.7	10000	350	Variabile	Si

Frecce lungo Y

Ascissa freccia	Combinazione	Freccia	Luce	L/f	L/f,min	Tipo	Verifica
50.7	SLE RA 1	-0.008	108.7	10000	250	Totale	Si
50.7	SLE RA 31	-0.008	108.7	10000	250	Totale	Si
50.7	SLE RA 30	-0.008	108.7	10000	250	Totale	Si
50.7	SLE RA 29	-0.008	108.7	10000	250	Totale	Si
50.7	SLE RA 28	-0.008	108.7	10000	250	Totale	Si
61.6	SLE RA 2	0	108.7	10000	350	Variabile	Si
61.6	SLE RA 31	0.001	108.7	10000	350	Variabile	Si
61.6	SLE RA 30	0.001	108.7	10000	350	Variabile	Si
61.6	SLE RA 29	0	108.7	10000	350	Variabile	Si
61.6	SLE RA 28	0	108.7	10000	350	Variabile	Si

Superelemento in acciaio composto dall'asta 3

Caratteristiche del materiale

Acciaio: S275, fyk = 2750

Caratteristiche geometriche

Lunghezza: 74.7
Nodo iniziale: 24 Nodo finale: 69
Cerniera iniziale: No Cerniera finale: No
Sovraresistenza: 0% Sisma Z: No

Caratteristiche della sezione

Sezione	Rotazione	Area	Jx	Jy	ix	iy	Wx	Wy	Wplx	Wply
HEA180	0	45.3	2512.55	924.65	7.45	4.52	293.87	102.74	325.17	156.53

Verifiche di resistenza

Verifiche a forza assiale §4.2.4.1.2.1 - §4.2.4.1.2.2 NTC18

X	Comb.	Sfruttamento	Classe	NEd	Nc,Rd	Nt,Rd	Riduzione da taglio	ρx	ρy	Verifica
0	SLU 98	0.308	1	-36564.8	118634.3		1	0	0	Si

Verifiche a forza assiale SLD §4.2.4.1.2.1 - §4.2.4.1.2.2 NTC18

X	Comb.	Sfruttamento	Classe	NEd	Nc,Rd	Nt,Rd	Riduzione da taglio	ρx	ρy	Verifica
0	SLD 4	0.155	1	-18338.6	118634.3		1	0	0	Si

Verifica a taglio X §4.2.4.1.2.4 NTC18

X	Comb.	Sfruttamento	VEd	Vc,Rd	Av	Interazione taglio-torsione	Riduzione torsione	Verifica
34.9	SLV 12	0.004	204.2	49094.2	36.18	Considerata	0.9	Si

Verifica a taglio X SLD §4.2.4.1.2.4 NTC18

X	Comb.	Sfruttamento	VEd	Vc,Rd	Av	Interazione taglio-torsione	Riduzione torsione	Verifica
74.7	SLD 12	0.002	80.1	52610.9	36.18	Considerata	0.96	Si

Verifica a taglio Y §4.2.4.1.2.4 NTC18

X	Comb.	Sfruttamento	VEd	Vc,Rd	Av	Interazione taglio-torsione	Riduzione torsione	Verifica
74.7	SLU 132	0.249	-5454.6	21910.2	14.52	Considerata	1	Si

Verifica a taglio Y SLD §4.2.4.1.2.4 NTC18

X	Comb.	Sfruttamento	VEd	Vc,Rd	Av	Interazione taglio-torsione	Riduzione torsione	Verifica
74.7	SLD 3	0.15	-3263.8	21686.7	14.52	Considerata	0.99	Si

Verifica a torsione §4.2.4.1.2.5 NTC18

X	Comb.	Sfruttamento torsione	TEd	TRd	Riduzione taglio resistente	Sfruttamento taglio-torsione	τEd,totale	τRd	Verifica
74.7	SLV 12	0.243	-4406.2	18118.1	Considerata				Si

Verifica a torsione SLD §4.2.4.1.2.5 NTC18

X	Comb.	Sfruttamento torsione	TEd	TRd	Riduzione taglio resistente	Sfruttamento taglio-torsione	τEd,totale	τRd	Verifica
34.9	SLD 12	0.094	-1699.3	18118.1	Considerata				Si

Verifica a presso/tenso flessione retta X §§ 4.2.4.1.2.3 - 4.2.4.1.2.6 - 4.2.4.1.2.7 - 4.2.4.1.2.8 NTC18

Verifiche eseguite utilizzando la formula conservativa (6.2) §6.2.1 EN 1993-1-1:2005.

X	Comb.	Sfruttamento	Classe	NEd	NRd	Rid. NRd da VEd	Mx,Ed	Mx,Rd	Rid. Mx,Rd da VEd	Rid. Mx,Rd da NEd	ρx	ρy	Verifica
39.8	SLU 130	0.451	1	-34551.2	118634.3	1	136146	851642	1		0	0	Si

Verifica a presso/tenso flessione retta X SLD §§ 4.2.4.1.2.3 - 4.2.4.1.2.6 - 4.2.4.1.2.7 - 4.2.4.1.2.8 NTC18

Verifiche eseguite utilizzando la formula conservativa (6.2) §6.2.1 EN 1993-1-1:2005.

X	Comb.	Sfruttamento	Classe	NEd	NRd	Rid. NRd da VEd	Mx,Ed	Mx,Rd	Rid. Mx,Rd da VEd	Rid. Mx,Rd da NEd	ρx	ρy	Verifica
67.2	SLD 1	0.29	1	-15724.5	118634.3	1	134013	851642	1		0	0	Si

Verifica a presso/tenso flessione retta Y §§ 4.2.4.1.2.3 - 4.2.4.1.2.6 - 4.2.4.1.2.7 - 4.2.4.1.2.8 NTC18

Verifiche eseguite utilizzando la formula conservativa (6.2) §6.2.1 EN 1993-1-1:2005.

X	Comb.	Sfruttamento	Classe	NEd	NRd	Rid. NRd da VEd	My,Ed	My,Rd	Rid. My,Rd da VEd	Rid. My,Rd da NEd	ρx	ρy	Verifica
19.9	SLV 15	0.131	1	-14956.5	118634.3	1	-2213	409967	1		0	0	Si

Verifica a presso/tenso flessione deviata §§ 4.2.4.1.2.3 - 4.2.4.1.2.6 - 4.2.4.1.2.7 - 4.2.4.1.2.8 NTC18

Verifiche eseguite utilizzando la formula conservativa (6.2) §6.2.1 EN 1993-1-1:2005.

X	Comb.	Sfruttamento	Classe	NEd	NRd	Rid. NRd da VEd	Mx,Ed	Mx,Rd	My,Ed	My,Rd	Rid. Mx,Rd da VEd	Rid. Mx,Rd da NEd	Rid. My,Rd da VEd	Rid. My,Rd da NEd	α	β	ρx	ρy	Verifica
74.7	SLU 99	0.62	1	-32789.3	118634.3	1	292208	851642	362	409967	1		1				0	0	Si

Verifica a presso/tenso flessione deviata SLD §§ 4.2.4.1.2.3 - 4.2.4.1.2.6 - 4.2.4.1.2.7 - 4.2.4.1.2.8 NTC18

Verifiche eseguite utilizzando la formula conservativa (6.2) §6.2.1 EN 1993-1-1:2005.

X	Comb.	Sfruttamento	Classe	NEd	NRd	Rid. NRd da VEd	Mx,Ed	Mx,Rd	My,Ed	My,Rd	Rid. Mx,Rd da VEd	Rid. Mx,Rd da NEd	Rid. My,Rd da VEd	Rid. My,Rd da NEd	α	β	ρx	ρy	Verifica
74.7	SLD 3	0.316	1	-15434.3	118634.3	1	157164	851642	622	409967	1		1				0	0	Si

Verifiche ad instabilità

Caratteristiche iniziali

Membratura principale per controllo snellezza; Calcolo di snellezze ed N critici condotti secondo gli assi principali;
Curva X: b; Curva Y: c; Svergolamento: Carico all'estradosso; Curva svergolamento: b;

Dati per instabilità attorno a x

Numero rit.	Presente	Ascissa	Campata	βx/m	Vincolo a entrambi estremi	λx/m	λVer
1	Si	0					
			1-2	1	Si	10	Si, (<200)
2	Si	74.7					

Dati per instabilità attorno a y

Numero rit.	Presente	Ascissa	Campata	βy/n	k,LT	kw,LT	Vincolo a entrambi estremi	λy/n	λVer
1	Si	0							
			1-2	1	1	1	Si	16.5	Si, (<200)
2	Si	74.7							

Verifica di stabilità per pressoflessione §C.4.2.4.1.3.3.2 NTC18

X	Comb.	Sfruttamento	Classe	NEd	NRk	Mx,Ed max	Mx,Rk	My,Ed max	My,Rk	χ,x	χ,y	kxx	kxy	kyx	kyy	χ,LT	Verifica
0	SLU 132	0.58	1	-36564.8	124566	292208.1	894223.7	362.1	430465.2	1	1	0.535	0.224	0.79	0.373	1	Si

Verifica di stabilità per pressoflessione SLD §C.4.2.4.1.3.3.2 NTC18

X	Comb.	Sfruttamento	Classe	NEd	NRk	Mx,Ed max	Mx,Rk	My,Ed max	My,Rk	χ,x	χ,y	kxx	kxy	kyx	kyy	χ,LT	Verifica
0	SLD 1	0.302	1	-18338.3	124566	157194.4	894223.7	1150.3	430465.2	1	1	0.526	0.302	0.79	0.504	1	Si

Verifica di stabilità a taglio anima Y §4.2.4.1.2.4 [4.2.27] NTC18

η	hw	tw	hw/tw max	Verifica
1.2	15.2	0.6	55.46	Si

Verifica di stabilità a taglio anima Y SLD §4.2.4.1.2.4 [4.2.27] NTC18

η	hw	tw	hw/tw max	Verifica
1.2	15.2	0.6	55.46	Si

Verifiche a deformabilità

Mensola X: No; Mensola Y: No.

Frecce lungo X

Ascissa freccia	Combinazione	Freccia	Luce	L/f	L/f,min	Tipo	Verifica
52.3	SLE RA 1	0	74.7	10000	250	Totale	Si
52.3	SLE RA 31	0	74.7	10000	250	Totale	Si
52.3	SLE RA 30	0	74.7	10000	250	Totale	Si
52.3	SLE RA 29	0	74.7	10000	250	Totale	Si
52.3	SLE RA 28	0	74.7	10000	250	Totale	Si
47.3	SLE RA 2	0	74.7	10000	350	Variabile	Si
49.8	SLE RA 31	0	74.7	10000	350	Variabile	Si
49.8	SLE RA 30	0	74.7	10000	350	Variabile	Si
49.8	SLE RA 29	0	74.7	10000	350	Variabile	Si
49.8	SLE RA 28	0	74.7	10000	350	Variabile	Si

Frecce lungo Y

Ascissa freccia	Combinazione	Freccia	Luce	L/f	L/f,min	Tipo	Verifica
44.8	SLE RA 31	0.009	74.7	8025.7	250	Totale	Si
44.8	SLE RA 33	0.009	74.7	8025.7	250	Totale	Si
44.8	SLE RA 30	0.009	74.7	8025.7	250	Totale	Si
44.8	SLE RA 32	0.009	74.7	8025.7	250	Totale	Si
44.8	SLE RA 27	0.009	74.7	8298.8	250	Totale	Si
59.8	SLE RA 2	0	74.7	10000	350	Variabile	Si
42.3	SLE RA 31	0.006	74.7	10000	350	Variabile	Si
42.3	SLE RA 30	0.006	74.7	10000	350	Variabile	Si
42.3	SLE RA 29	0.006	74.7	10000	350	Variabile	Si
42.3	SLE RA 28	0.006	74.7	10000	350	Variabile	Si

Superelemento in acciaio composto dall'asta 4

Caratteristiche del materiale

Acciaio: S275, fyk = 2750

Caratteristiche geometriche

Lunghezza: 74.7
Nodo iniziale: 27 Nodo finale: 70
Cerniera iniziale: No Cerniera finale: No
Sovraresistenza: 0% Sisma Z: No

Caratteristiche della sezione

Sezione	Rotazione	Area	Jx	Jy	ix	iy	Wx	Wy	Wplx	Wply
HEA180	0	45.3	2512.55	924.65	7.45	4.52	293.87	102.74	325.17	156.53

Verifiche di resistenza

Verifiche a forza assiale §4.2.4.1.2.1 - §4.2.4.1.2.2 NTC18

X	Comb.	Sfruttamento	Classe	NEd	Nc,Rd	Nt,Rd	Riduzione da taglio	ρx	ρy	Verifica
0	SLU 98	0.308	1	-36561.6	118634.3		1	0	0	Si

Verifiche a forza assiale SLD §4.2.4.1.2.1 - §4.2.4.1.2.2 NTC18

X	Comb.	Sfruttamento	Classe	NEd	Nc,Rd	Nt,Rd	Riduzione da taglio	ρx	ρy	Verifica
0	SLD 16	0.155	1	-18338.6	118634.3		1	0	0	Si

Verifica a taglio X §4.2.4.1.2.4 NTC18

X	Comb.	Sfruttamento	VEd	Vc,Rd	Av	Interazione taglio-torsione	Riduzione torsione	Verifica
74.7	SLV 8	0.004	-204.2	49094.2	36.18	Considerata	0.9	Si

Verifica a taglio X SLD §4.2.4.1.2.4 NTC18

X	Comb.	Sfruttamento	VEd	Vc,Rd	Av	Interazione taglio-torsione	Riduzione torsione	Verifica
74.7	SLD 8	0.002	-80.1	52610.9	36.18	Considerata	0.96	Si

Verifica a taglio Y §4.2.4.1.2.4 NTC18

X	Comb.	Sfruttamento	VEd	Vc,Rd	Av	Interazione taglio-torsione	Riduzione torsione	Verifica
74.7	SLU 99	0.249	-5454.5	21910.2	14.52	Considerata	1	Si

Verifica a taglio Y SLD §4.2.4.1.2.4 NTC18

X	Comb.	Sfruttamento	VEd	Vc,Rd	Av	Interazione taglio-torsione	Riduzione torsione	Verifica
74.7	SLD 16	0.15	-3263.8	21686.7	14.52	Considerata	0.99	Si

Verifica a torsione §4.2.4.1.2.5 NTC18

X	Comb.	Sfruttamento torsione	TEd	TRd	Riduzione taglio resistente	Sfruttamento taglio-torsione	τEd,totale	τRd	Verifica
69.7	SLV 8	0.243	4406.2	18118.1	Considerata				Si

Verifica a torsione SLD §4.2.4.1.2.5 NTC18

X	Comb.	Sfruttamento torsione	TEd	TRd	Riduzione taglio resistente	Sfruttamento taglio-torsione	τEd,totale	τRd	Verifica
74.7	SLD 8	0.094	1699.3	18118.1	Considerata				Si

Verifica a presso/tenso flessione retta X §§ 4.2.4.1.2.3 - 4.2.4.1.2.6 - 4.2.4.1.2.7 - 4.2.4.1.2.8 NTC18

Verifiche eseguite utilizzando la formula conservativa (6.2) §6.2.1 EN 1993-1-1:2005.

X	Comb.	Sfruttamento	Classe	NEd	NRd	Rid. NRd da VEd	Mx,Ed	Mx,Rd	Rid. Mx,Rd da VEd	Rid. Mx,Rd da NEd	ρx	ρy	Verifica
39.8	SLU 97	0.451	1	-34548	118634.3	1	136139	851642	1		0	0	Si

Verifica a presso/tenso flessione retta X SLD §§ 4.2.4.1.2.3 - 4.2.4.1.2.6 - 4.2.4.1.2.7 - 4.2.4.1.2.8 NTC18

Verifiche eseguite utilizzando la formula conservativa (6.2) §6.2.1 EN 1993-1-1:2005.

X	Comb.	Sfruttamento	Classe	NEd	NRd	Rid. NRd da VEd	Mx,Ed	Mx,Rd	Rid. Mx,Rd da VEd	Rid. Mx,Rd da NEd	ρx	ρy	Verifica
67.2	SLD 13	0.29	1	-15724.5	118634.3	1	134013	851642	1		0	0	Si

Verifica a presso/tenso flessione retta Y §§ 4.2.4.1.2.3 - 4.2.4.1.2.6 - 4.2.4.1.2.7 - 4.2.4.1.2.8 NTC18

Verifiche eseguite utilizzando la formula conservativa (6.2) §6.2.1 EN 1993-1-1:2005.

X	Comb.	Sfruttamento	Classe	NEd	NRd	Rid. NRd da VEd	My,Ed	My,Rd	Rid. My,Rd da VEd	Rid. My,Rd da NEd	ρx	ρy	Verifica
19.9	SLV 3	0.131	1	-14956.5	118634.3	1	2213	409967	1		0	0	Si

Verifica a presso/tenso flessione deviata §§ 4.2.4.1.2.3 - 4.2.4.1.2.6 - 4.2.4.1.2.7 - 4.2.4.1.2.8 NTC18

Verifiche eseguite utilizzando la formula conservativa (6.2) §6.2.1 EN 1993-1-1:2005.

X	Comb.	Sfruttamento	Classe	NEd	NRd	Rid. NRd da VEd	Mx,Ed	Mx,Rd	My,Ed	My,Rd	Rid. Mx,Rd da VEd	Rid. Mx,Rd da NEd	Rid. My,Rd da VEd	Rid. My,Rd da NEd	α	β	ρx	ρy	Verifica
74.7	SLU 132	0.62	1	-32786.1	118634.3	1	292195	851642	-362	409967	1		1				0	0	Si

Verifica a presso/tenso flessione deviata SLD §§ 4.2.4.1.2.3 - 4.2.4.1.2.6 - 4.2.4.1.2.7 - 4.2.4.1.2.8 NTC18

Verifiche eseguite utilizzando la formula conservativa (6.2) §6.2.1 EN 1993-1-1:2005.

X	Comb.	Sfruttamento	Classe	NEd	NRd	Rid. NRd da VEd	Mx,Ed	Mx,Rd	My,Ed	My,Rd	Rid. Mx,Rd da VEd	Rid. Mx,Rd da NEd	Rid. My,Rd da VEd	Rid. My,Rd da NEd	α	β	ρx	ρy	Verifica
74.7	SLD 16	0.316	1	-15434.3	118634.3	1	157164	851642	-622	409967	1		1				0	0	Si

Verifiche ad instabilità

Caratteristiche iniziali

Membratura principale per controllo snellezza; Calcolo di snellezze ed N critici condotti secondo gli assi principali;
Curva X: b; Curva Y: c; Svergolamento: Carico all'estradosso; Curva svergolamento: b;

Dati per instabilità attorno a x

Numero rit.	Presente	Ascissa	Campata	βx/m	Vincolo a entrambi estremi	λx/m	λVer
1	Si	0					
			1-2	1	Si	10	Si, (<200)
2	Si	74.7					

Dati per instabilità attorno a y

Numero rit.	Presente	Ascissa	Campata	βy/n	k,LT	kw,LT	Vincolo a entrambi estremi	λy/n	λVer
1	Si	0							
			1-2	1	1	1	Si	16.5	Si, (<200)
2	Si	74.7							

Verifica di stabilità per pressoflessione §C.4.2.4.1.3.3.2 NTC18

X	Comb.	Sfruttamento	Classe	NEd	NRk	Mx,Ed max	Mx,Rk	My,Ed max	My,Rk	χ,x	χ,y	kxx	kxy	kyx	kyy	χ,LT	Verifica
0	SLU 132	0.58	1	-36561.6	124566	292195.2	894223.7	362	430465.2	1	1	0.535	0.224	0.79	0.373	1	Si

Verifica di stabilità per pressoflessione SLD §C.4.2.4.1.3.3.2 NTC18

X	Comb.	Sfruttamento	Classe	NEd	NRk	Mx,Ed max	Mx,Rk	My,Ed max	My,Rk	χ,x	χ,y	kxx	kxy	kyx	kyy	χ,LT	Verifica
0	SLD 13	0.302	1	-18338.3	124566	157194.4	894223.7	1150.3	430465.2	1	1	0.526	0.302	0.79	0.504	1	Si

Verifica di stabilità a taglio anima Y §4.2.4.1.2.4 [4.2.27] NTC18

η	hw	tw	hw/tw max	Verifica
1.2	15.2	0.6	55.46	Si

Verifica di stabilità a taglio anima Y SLD §4.2.4.1.2.4 [4.2.27] NTC18

η	hw	tw	hw/tw max	Verifica
1.2	15.2	0.6	55.46	Si

Verifiche a deformabilità

Mensola X: No; Mensola Y: No.

Frecce lungo X

Ascissa freccia	Combinazione	Freccia	Luce	L/f	L/f,min	Tipo	Verifica
52.3	SLE RA 1	0	74.7	10000	250	Totale	Si
52.3	SLE RA 31	0	74.7	10000	250	Totale	Si
52.3	SLE RA 30	0	74.7	10000	250	Totale	Si
52.3	SLE RA 29	0	74.7	10000	250	Totale	Si
52.3	SLE RA 28	0	74.7	10000	250	Totale	Si
47.3	SLE RA 2	0	74.7	10000	350	Variabile	Si
49.8	SLE RA 31	0	74.7	10000	350	Variabile	Si
49.8	SLE RA 30	0	74.7	10000	350	Variabile	Si
49.8	SLE RA 29	0	74.7	10000	350	Variabile	Si
49.8	SLE RA 28	0	74.7	10000	350	Variabile	Si

Frecce lungo Y

Ascissa freccia	Combinazione	Freccia	Luce	L/f	L/f,min	Tipo	Verifica
44.8	SLE RA 31	0.009	74.7	8026.2	250	Totale	Si

Ascissa freccia	Combinazione	Freccia	Luce	L/f	L/f,min	Tipo	Verifica
44.8	SLE RA 33	0.009	74.7	8026.2	250	Totale	Si
44.8	SLE RA 30	0.009	74.7	8026.2	250	Totale	Si
44.8	SLE RA 32	0.009	74.7	8026.2	250	Totale	Si
44.8	SLE RA 27	0.009	74.7	8299.3	250	Totale	Si
59.8	SLE RA 2	0	74.7	10000	350	Variabile	Si
42.3	SLE RA 31	0.006	74.7	10000	350	Variabile	Si
42.3	SLE RA 30	0.006	74.7	10000	350	Variabile	Si
42.3	SLE RA 29	0.006	74.7	10000	350	Variabile	Si
42.3	SLE RA 28	0.006	74.7	10000	350	Variabile	Si

Superelemento in acciaio composto dall'asta 5

Caratteristiche del materiale

Acciaio: S275, fyk = 2750

Caratteristiche geometriche

Lunghezza: 78.5
Nodo iniziale: 69 Nodo finale: 91
Cerniera iniziale: No Cerniera finale: No
Sovraresistenza: 0% Sisma Z: No

Caratteristiche della sezione

Sezione	Rotazione	Area	Jx	Jy	ix	iy	Wx	Wy	Wplx	Wply
HEA180	0	45.3	2512.55	924.65	7.45	4.52	293.87	102.74	325.17	156.53

Verifiche di resistenza

Verifiche a forza assiale §4.2.4.1.2.1 - §4.2.4.1.2.2 NTC18

X	Comb.	Sfruttamento	Classe	NEd	Nc,Rd	Nt,Rd	Riduzione da taglio	ρx	ρy	Verifica
0	SLU 131	0.292	1	-34647.7	118634.3		1	0	0	Si

Verifiche a forza assiale SLD §4.2.4.1.2.1 - §4.2.4.1.2.2 NTC18

X	Comb.	Sfruttamento	Classe	NEd	Nc,Rd	Nt,Rd	Riduzione da taglio	ρx	ρy	Verifica
0	SLD 3	0.133	1	-15816.2	118634.3		1	0	0	Si

Verifica a taglio X §4.2.4.1.2.4 NTC18

X	Comb.	Sfruttamento	VEd	Vc,Rd	Av	Interazione taglio-torsione	Riduzione torsione	Verifica
0	SLV 9	0.002	-108.8	50002.8	36.18	Considerata	0.91	Si

Verifica a taglio X SLD §4.2.4.1.2.4 NTC18

X	Comb.	Sfruttamento	VEd	Vc,Rd	Av	Interazione taglio-torsione	Riduzione torsione	Verifica
0	SLD 9	0.001	-43.3	52956.6	36.18	Considerata	0.97	Si

Verifica a taglio Y §4.2.4.1.2.4 NTC18

X	Comb.	Sfruttamento	VEd	Vc,Rd	Av	Interazione taglio-torsione	Riduzione torsione	Verifica
0	SLU 99	0.131	2880.8	21935.4	14.52	Considerata	1	Si

Verifica a taglio Y SLD §4.2.4.1.2.4 NTC18

X	Comb.	Sfruttamento	VEd	Vc,Rd	Av	Interazione taglio-torsione	Riduzione torsione	Verifica
0	SLD 10	0.074	1581.1	21250	14.52	Considerata	0.97	Si

Verifica a torsione §4.2.4.1.2.5 NTC18

X	Comb.	Sfruttamento torsione	TEd	TRd	Riduzione taglio resistente	Sfruttamento taglio-torsione	τEd,totale	τRd	Verifica
78.5	SLV 9	0.206	3724.7	18118.1	Considerata				Si

Verifica a torsione SLD §4.2.4.1.2.5 NTC18

X	Comb.	Sfruttamento torsione	TEd	TRd	Riduzione taglio resistente	Sfruttamento taglio-torsione	τEd,totale	τRd	Verifica
78.5	SLD 10	0.079	1423.1	18118.1	Considerata				Si

Verifica a presso/tenso flessione retta X §§ 4.2.4.1.2.3 - 4.2.4.1.2.6 - 4.2.4.1.2.7 - 4.2.4.1.2.8 NTC18

Verifiche eseguite utilizzando la formula conservativa (6.2) §6.2.1 EN 1993-1-1:2005.

X	Comb.	Sfruttamento	Classe	NEd	NRd	Rid. NRd da VEd	Mx,Ed	Mx,Rd	Rid. Mx,Rd da VEd	Rid. Mx,Rd da NEd	ρx	ρy	Verifica
44.5	SLU 130	0.52	1	-33998.7	118634.3	1	198964	851642	1		0	0	Si

Verifica a presso/tenso flessione deviata §§ 4.2.4.1.2.3 - 4.2.4.1.2.6 - 4.2.4.1.2.7 - 4.2.4.1.2.8 NTC18

Verifiche eseguite utilizzando la formula conservativa (6.2) §6.2.1 EN 1993-1-1:2005.

X	Comb.	Sfruttamento	Classe	NEd	NRd	Rid. NRd da VEd	Mx,Ed	Mx,Rd	My,Ed	My,Rd	Rid. Mx,Rd da VEd	Rid. Mx,Rd da NEd	Rid. My,Rd da VEd	Rid. My,Rd da NEd	α	β	ρx	ρy	Verifica
0	SLU 132	0.636	1	-34647.7	118634.3	1	292183	851642	357	409967	1		1				0	0	Si

Verifica a presso/tenso flessione deviata SLD §§ 4.2.4.1.2.3 - 4.2.4.1.2.6 - 4.2.4.1.2.7 - 4.2.4.1.2.8 NTC18

Verifiche eseguite utilizzando la formula conservativa (6.2) §6.2.1 EN 1993-1-1:2005.

X	Comb.	Sfruttamento	Classe	NEd	NRd	Rid. NRd da VEd	Mx,Ed	Mx,Rd	My,Ed	My,Rd	Rid. Mx,Rd da VEd	Rid. Mx,Rd da NEd	Rid. My,Rd da VEd	Rid. My,Rd da NEd	α	β	ρx	ρy	Verifica
0	SLD 3	0.319	1	-15816.2	118634.3	1	157164	851642	643	409967	1		1				0	0	Si

Verifiche ad instabilità

Caratteristiche iniziali

Membratura principale per controllo snellezza; Calcolo di snellezze ed N critici condotti secondo gli assi principali;
Curva X: b; Curva Y: c; Svergolamento: Carico all'estradosso; Curva svergolamento: b;

Dati per instabilità attorno a x

Numero rit.	Presente	Ascissa	Campata	βx/m	Vincolo a entrambi estremi	λx/m	λVer
1	Si	0					
			1-2	1	Si	10.5	Si, (<200)
2	Si	78.5					

Dati per instabilità attorno a y

Numero rit.	Presente	Ascissa	Campata	βy/n	k,LT	kw,LT	Vincolo a entrambi estremi	λy/n	λVer
1	Si	0							
			1-2	1	1	1	Si	17.4	Si, (<200)
2	Si	78.5							

Verifica di stabilità per pressoflessione §C.4.2.4.1.3.3.2 NTC18

X	Comb.	Sfruttamento	Classe	NEd	NRk	Mx,Ed max	Mx,Rk	My,Ed max	My,Rk	χ,x	χ,y	kxx	kxy	kyx	kyy	χ,LT	Verifica
0	SLU 132	0.567	1	-34647.7	124566	292183.5	894223.7	356.8	430465.2	1	1	0.747	0.269	0.8	0.449	1	Si

Verifica di stabilità per pressoflessione SLD §C.4.2.4.1.3.3.2 NTC18

X	Comb.	Sfruttamento	Classe	NEd	NRk	Mx,Ed max	Mx,Rk	My,Ed max	My,Rk	χ,x	χ,y	kxx	kxy	kyx	kyy	χ,LT	Verifica
0	SLD 3	0.283	1	-15816.2	124566	157163.6	894223.7	1329.2	430465.2	1	1	0.787	0.463	0.8	0.772	1	Si

Verifica di stabilità a taglio anima Y §4.2.4.1.2.4 [4.2.27] NTC18

η	hw	tw	hw/tw max	Verifica
1.2	15.2	0.6	55.46	Si

Verifica di stabilità a taglio anima Y SLD §4.2.4.1.2.4 [4.2.27] NTC18

η	hw	tw	hw/tw max	Verifica
1.2	15.2	0.6	55.46	Si

Verifiche a deformabilità

Mensola X: No; Mensola Y: No.

Frecce lungo X

Ascissa freccia	Combinazione	Freccia	Luce	L/f	L/f,min	Tipo	Verifica
28.8	SLE RA 1	0	78.5	10000	250	Totale	Si
28.8	SLE RA 31	0	78.5	10000	250	Totale	Si
28.8	SLE RA 30	0	78.5	10000	250	Totale	Si
28.8	SLE RA 29	0	78.5	10000	250	Totale	Si
28.8	SLE RA 28	0	78.5	10000	250	Totale	Si
23.5	SLE RA 2	0	78.5	10000	350	Variabile	Si
28.8	SLE RA 31	0	78.5	10000	350	Variabile	Si
28.8	SLE RA 30	0	78.5	10000	350	Variabile	Si
28.8	SLE RA 29	0	78.5	10000	350	Variabile	Si
28.8	SLE RA 28	0	78.5	10000	350	Variabile	Si

Frecce lungo Y

Ascissa freccia	Combinazione	Freccia	Luce	L/f	L/f,min	Tipo	Verifica
36.6	SLE RA 31	0.02	78.5	4009.2	250	Totale	Si
36.6	SLE RA 33	0.02	78.5	4009.2	250	Totale	Si
36.6	SLE RA 30	0.02	78.5	4009.2	250	Totale	Si
36.6	SLE RA 32	0.02	78.5	4009.2	250	Totale	Si
36.6	SLE RA 27	0.019	78.5	4103.7	250	Totale	Si
36.6	SLE RA 31	0.01	78.5	8187.2	350	Variabile	Si
36.6	SLE RA 33	0.01	78.5	8187.2	350	Variabile	Si
36.6	SLE RA 30	0.01	78.5	8187.2	350	Variabile	Si
36.6	SLE RA 32	0.01	78.5	8187.2	350	Variabile	Si
36.6	SLE RA 27	0.009	78.5	8591.2	350	Variabile	Si

Superelemento in acciaio composto dall'asta 6

Caratteristiche del materiale

Acciaio: S275, fyk = 2750

Caratteristiche geometriche

Lunghezza: 78.5
Nodo iniziale: 70 Nodo finale: 92
Cerniera iniziale: No Cerniera finale: No
Sovraresistenza: 0% Sisma Z: No

Caratteristiche della sezione

Sezione	Rotazione	Area	Jx	Jy	ix	iy	Wx	Wy	Wplx	Wply
HEA180	0	45.3	2512.55	924.65	7.45	4.52	293.87	102.74	325.17	156.53

Verifiche di resistenza

Verifiche a forza assiale §4.2.4.1.2.1 - §4.2.4.1.2.2 NTC18

X	Comb.	Sfruttamento	Classe	NEd	Nc,Rd	Nt,Rd	Riduzione da taglio	ρx	ρy	Verifica
0	SLU 98	0.292	1	-34646.4	118634.3		1	0	0	Si

Verifiche a forza assiale SLD §4.2.4.1.2.1 - §4.2.4.1.2.2 NTC18

X	Comb.	Sfruttamento	Classe	NEd	Nc,Rd	Nt,Rd	Riduzione da taglio	ρx	ρy	Verifica
0	SLD 15	0.133	1	-15816.2	118634.3		1	0	0	Si

Verifica a taglio X §4.2.4.1.2.4 NTC18

X	Comb.	Sfruttamento	VEd	Vc,Rd	Av	Interazione taglio-torsione	Riduzione torsione	Verifica
0	SLV 5	0.002	108.8	50002.8	36.18	Considerata	0.91	Si

Verifica a taglio X SLD §4.2.4.1.2.4 NTC18

X	Comb.	Sfruttamento	VEd	Vc,Rd	Av	Interazione taglio-torsione	Riduzione torsione	Verifica
0	SLD 5	0.001	43.3	52956.6	36.18	Considerata	0.97	Si

Verifica a taglio Y §4.2.4.1.2.4 NTC18

X	Comb.	Sfruttamento	VEd	Vc,Rd	Av	Interazione taglio-torsione	Riduzione torsione	Verifica
0	SLU 132	0.131	2877.7	21935.4	14.52	Considerata	1	Si

Verifica a taglio Y SLD §4.2.4.1.2.4 NTC18

X	Comb.	Sfruttamento	VEd	Vc,Rd	Av	Interazione taglio-torsione	Riduzione torsione	Verifica
0	SLD 6	0.074	1581.1	21250	14.52	Considerata	0.97	Si

Verifica a torsione §4.2.4.1.2.5 NTC18

X	Comb.	Sfruttamento torsione	TEd	TRd	Riduzione taglio resistente	Sfruttamento taglio-torsione	τEd,totale	τRd	Verifica
36.6	SLV 6	0.206	-3724.7	18118.1	Considerata				Si

Verifica a torsione SLD §4.2.4.1.2.5 NTC18

X	Comb.	Sfruttamento torsione	TEd	TRd	Riduzione taglio resistente	Sfruttamento taglio-torsione	τEd,totale	τRd	Verifica
41.8	SLD 5	0.079	-1423.1	18118.1	Considerata				Si

Verifica a presso/tenso flessione retta X §§ 4.2.4.1.2.3 - 4.2.4.1.2.6 - 4.2.4.1.2.7 - 4.2.4.1.2.8 NTC18

Verifiche eseguite utilizzando la formula conservativa (6.2) §6.2.1 EN 1993-1-1:2005.

X	Comb.	Sfruttamento	Classe	NEd	NRd	Rid. NRd da VEd	Mx,Ed	Mx,Rd	Rid. Mx,Rd da VEd	Rid. Mx,Rd da NEd	ρx	ρy	Verifica
44.5	SLU 97	0.52	1	-33997.4	118634.3	1	199089	851642	1		0	0	Si

Verifica a presso/tenso flessione deviata §§ 4.2.4.1.2.3 - 4.2.4.1.2.6 - 4.2.4.1.2.7 - 4.2.4.1.2.8 NTC18

Verifiche eseguite utilizzando la formula conservativa (6.2) §6.2.1 EN 1993-1-1:2005.

X	Comb.	Sfruttamento	Classe	NEd	NRd	Rid. NRd da VEd	Mx,Ed	Mx,Rd	My,Ed	My,Rd	Rid. Mx,Rd da VEd	Rid. Mx,Rd da NEd	Rid. My,Rd da VEd	Rid. My,Rd da NEd	α	β	ρx	ρy	Verifica
0	SLU 99	0.636	1	-34646.4	118634.3	1	292171	851642	-357	409967	1		1				0	0	Si

Verifica a presso/tenso flessione deviata SLD §§ 4.2.4.1.2.3 - 4.2.4.1.2.6 - 4.2.4.1.2.7 - 4.2.4.1.2.8 NTC18

Verifiche eseguite utilizzando la formula conservativa (6.2) §6.2.1 EN 1993-1-1:2005.

X	Comb.	Sfruttamento	Classe	NEd	NRd	Rid. NRd da VEd	Mx,Ed	Mx,Rd	My,Ed	My,Rd	Rid. Mx,Rd da VEd	Rid. Mx,Rd da NEd	Rid. My,Rd da VEd	Rid. My,Rd da NEd	α	β	ρx	ρy	Verifica
0	SLD 15	0.319	1	-15816.2	118634.3	1	157164	851642	-643	409967	1		1				0	0	Si

Verifiche ad instabilità

Caratteristiche iniziali

Membratura principale per controllo snellezza; Calcolo di snellezze ed N critici condotti secondo gli assi principali;
Curva X: b; Curva Y: c; Svergolamento: Carico all'estradosso; Curva svergolamento: b;

Dati per instabilità attorno a x

Numero rit.	Presente	Ascissa	Campata	βx/m	Vincolo a entrambi estremi	λx/m	λVer
1	Si	0					
			1-2	1	Si	10.5	Si, (<200)
2	Si	78.5					

Dati per instabilità attorno a y

Numero rit.	Presente	Ascissa	Campata	βy/n	k,LT	kw,LT	Vincolo a entrambi estremi	λy/n	λVer
1	Si	0							
			1-2	1	1	1	Si	17.4	Si, (<200)
2	Si	78.5							

Verifica di stabilità per pressoflessione §C.4.2.4.1.3.3.2 NTC18

X	Comb.	Sfruttamento	Classe	NEd	NRk	Mx,Ed max	Mx,Rk	My,Ed max	My,Rk	χ,x	χ,y	kxx	kxy	kyx	kyy	χ,LT	Verifica
0	SLU 99	0.567	1	-34646.4	124566	292170.6	894223.7	356.8	430465.2	1	1	0.748	0.269	0.8	0.449	1	Si

Verifica di stabilità per pressoflessione SLD §C.4.2.4.1.3.3.2 NTC18

X	Comb.	Sfruttamento	Classe	NEd	NRk	Mx,Ed max	Mx,Rk	My,Ed max	My,Rk	χ,x	χ,y	kxx	kxy	kyx	kyy	χ,LT	Verifica
0	SLD 16	0.283	1	-15816.2	124566	157163.6	894223.7	1329.2	430465.2	1	1	0.787	0.463	0.8	0.772	1	Si

Verifica di stabilità a taglio anima Y §4.2.4.1.2.4 [4.2.27] NTC18

η	hw	tw	hw/tw max	Verifica
1.2	15.2	0.6	55.46	Si

Verifica di stabilità a taglio anima Y SLD §4.2.4.1.2.4 [4.2.27] NTC18

η	hw	tw	hw/tw max	Verifica
1.2	15.2	0.6	55.46	Si

Verifiche a deformabilità

Mensola X: No; Mensola Y: No.

Frecce lungo X

Ascissa freccia	Combinazione	Freccia	Luce	L/f	L/f,min	Tipo	Verifica
28.8	SLE RA 1	0	78.5	10000	250	Totale	Si
28.8	SLE RA 31	0	78.5	10000	250	Totale	Si
28.8	SLE RA 30	0	78.5	10000	250	Totale	Si
28.8	SLE RA 29	0	78.5	10000	250	Totale	Si
28.8	SLE RA 28	0	78.5	10000	250	Totale	Si
23.5	SLE RA 2	0	78.5	10000	350	Variabile	Si
28.8	SLE RA 31	0	78.5	10000	350	Variabile	Si
28.8	SLE RA 30	0	78.5	10000	350	Variabile	Si
28.8	SLE RA 29	0	78.5	10000	350	Variabile	Si
28.8	SLE RA 28	0	78.5	10000	350	Variabile	Si

Frecce lungo Y

Ascissa freccia	Combinazione	Freccia	Luce	L/f	L/f,min	Tipo	Verifica
36.6	SLE RA 31	0.02	78.5	4007.1	250	Totale	Si
36.6	SLE RA 33	0.02	78.5	4007.1	250	Totale	Si
36.6	SLE RA 30	0.02	78.5	4007.1	250	Totale	Si
36.6	SLE RA 32	0.02	78.5	4007.1	250	Totale	Si
36.6	SLE RA 27	0.019	78.5	4102	250	Totale	Si
36.6	SLE RA 31	0.01	78.5	8178.4	350	Variabile	Si
36.6	SLE RA 33	0.01	78.5	8178.4	350	Variabile	Si
36.6	SLE RA 30	0.01	78.5	8178.4	350	Variabile	Si
36.6	SLE RA 32	0.01	78.5	8178.4	350	Variabile	Si
36.6	SLE RA 27	0.009	78.5	8583.4	350	Variabile	Si

Superelemento in acciaio composto dall'asta 7

Caratteristiche del materiale

Acciaio: S275, fyk = 2750

Caratteristiche geometriche

Lunghezza: 170.7
Nodo iniziale: 92 Nodo finale: 113
Cerniera iniziale: No Cerniera finale: No
Sovraresistenza: 0% Sisma Z: No

Caratteristiche della sezione

Sezione	Rotazione	Area	Jx	Jy	ix	iy	Wx	Wy	Wplx	Wply
HEA180	0	45.3	2512.55	924.65	7.45	4.52	293.87	102.74	325.17	156.53

Verifiche di resistenza

Verifiche a forza assiale §4.2.4.1.2.1 - §4.2.4.1.2.2 NTC18

X	Comb.	Sfruttamento	Classe	NEd	Nc,Rd	Nt,Rd	Riduzione da taglio	ρx	ρy	Verifica
0	SLU 98	0.268	1	-31819.3	118634.3		1	0	0	Si

Verifiche a forza assiale SLD §4.2.4.1.2.1 - §4.2.4.1.2.2 NTC18

X	Comb.	Sfruttamento	Classe	NEd	Nc,Rd	Nt,Rd	Riduzione da taglio	ρx	ρy	Verifica
0	SLD 15	0.119	1	-14160.4	118634.3		1	0	0	Si

Verifica a taglio X §4.2.4.1.2.4 NTC18

X	Comb.	Sfruttamento	VEd	Vc,Rd	Av	Interazione taglio-torsione	Riduzione torsione	Verifica
0	SLV 5	0.001	-62.6	54396.6	36.18	Considerata	0.99	Si

Verifica a taglio Y §4.2.4.1.2.4 NTC18

X	Comb.	Sfruttamento	VEd	Vc,Rd	Av	Interazione taglio-torsione	Riduzione torsione	Verifica
0	SLU 97	0.267	5858.9	21950.9	14.52	Considerata	1	Si

Verifica a taglio Y SLD §4.2.4.1.2.4 NTC18

X	Comb.	Sfruttamento	VEd	Vc,Rd	Av	Interazione taglio-torsione	Riduzione torsione	Verifica
0	SLD 13	0.16	3517.7	21936.7	14.52	Considerata	1	Si

Verifica a torsione §4.2.4.1.2.5 NTC18

X	Comb.	Sfruttamento torsione	TEd	TRd	Riduzione taglio resistente	Sfruttamento taglio-torsione	τEd,totale	τRd	Verifica
91	SLV 5	0.014	-253.1	18118.1	Considerata				Si

Verifica a torsione SLD §4.2.4.1.2.5 NTC18

X	Comb.	Sfruttamento torsione	TEd	TRd	Riduzione taglio resistente	Sfruttamento taglio-torsione	τEd,totale	τRd	Verifica
91	SLD 5	0.005	-96.2	18118.1	Considerata				Si

Verifica a presso/tenso flessione retta X §§ 4.2.4.1.2.3 - 4.2.4.1.2.6 - 4.2.4.1.2.7 - 4.2.4.1.2.8 NTC18

Verifiche eseguite utilizzando la formula conservativa (6.2) §6.2.1 EN 1993-1-1:2005.

X	Comb.	Sfruttamento	Classe	NEd	NRd	Rid. NRd da VEd	Mx,Ed	Mx,Rd	Rid. Mx,Rd da VEd	Rid. Mx,Rd da NEd	ρx	ρy	Verifica
159.3	SLU 130	0.6	1	-31121.5	118634.3	1	-287388	851642	1		0	0	Si

Verifica a presso/tenso flessione deviata §§ 4.2.4.1.2.3 - 4.2.4.1.2.6 - 4.2.4.1.2.7 - 4.2.4.1.2.8 NTC18

Verifiche eseguite utilizzando la formula conservativa (6.2) §6.2.1 EN 1993-1-1:2005.

X	Comb.	Sfruttamento	Classe	NEd	NRd	Rid. NRd da VEd	Mx,Ed	Mx,Rd	My,Ed	My,Rd	Rid. Mx,Rd da VEd	Rid. Mx,Rd da NEd	Rid. My,Rd da VEd	Rid. My,Rd da NEd	α	β	ρx	ρy	Verifica
0	SLU 132	0.474	1	-31819.3	118634.3	1	174884	851642	115	409967	1		1				0	0	Si

Verifica a presso/tenso flessione deviata SLD §§ 4.2.4.1.2.3 - 4.2.4.1.2.6 - 4.2.4.1.2.7 - 4.2.4.1.2.8 NTC18

Verifiche eseguite utilizzando la formula conservativa (6.2) §6.2.1 EN 1993-1-1:2005.

X	Comb.	Sfruttamento	Classe	NEd	NRd	Rid. NRd da VEd	Mx,Ed	Mx,Rd	My,Ed	My,Rd	Rid. Mx,Rd da VEd	Rid. Mx,Rd da NEd	Rid. My,Rd da VEd	Rid. My,Rd da NEd	α	β	ρx	ρy	Verifica
0	SLD 13	0.262	1	-14159.4	118634.3	1	118362	851642	1514	409967	1		1				0	0	Si

Verifiche ad instabilità

Caratteristiche iniziali

Membratura principale per controllo snellezza; Calcolo di snellezze ed N critici condotti secondo gli assi principali;
Curva X: b; Curva Y: c; Svergolamento: Carico all'estradosso; Curva svergolamento: b;

Dati per instabilità attorno a x

Numero rit.	Presente	Ascissa	Campata	βx/m	Vincolo a entrambi estremi	λx/m	λVer
1	Si	0					
			1-2	1	Si	22.9	Si, (<200)
2	Si	170.7					

Dati per instabilità attorno a y

Numero rit.	Presente	Ascissa	Campata	βy/n	k,LT	kw,LT	Vincolo a entrambi estremi	λy/n	λVer
1	Si	0							
			1-2	1	1	1	Si	37.8	Si, (<200)
2	Si	170.7							

Verifica di stabilità per pressoflessione §C.4.2.4.1.3.3.2 NTC18

X	Comb.	Sfruttamento	Classe	NEd	NRk	Mx,Ed max	Mx,Rk	My,Ed max	My,Rk	χ,x	χ,y	kxx	kxy	kyx	kyy	χ,LT	Verifica
0	SLU 99	0.641	1	-31819.3	124566	287387.8	894223.7	114.6	430465.2	0.977	0.879	0.747	0.405	0.973	0.674	0.978	Si

Verifica di stabilità per pressoflessione SLD §C.4.2.4.1.3.3.2 NTC18

X	Comb.	Sfruttamento	Classe	NEd	NRk	Mx,Ed max	Mx,Rk	My,Ed max	My,Rk	χ,x	χ,y	kxx	kxy	kyx	kyy	χ,LT	Verifica
0	SLD 13	0.279	1	-14159.4	124566	118361.8	894223.7	1514.1	430465.2	0.977	0.879	0.687	0.414	0.986	0.69	0.978	Si

Verifica di stabilità a taglio anima Y §4.2.4.1.2.4 [4.2.27] NTC18

η	hw	tw	hw/tw max	Verifica
1.2	15.2	0.6	55.46	Si

Verifica di stabilità a taglio anima Y SLD §4.2.4.1.2.4 [4.2.27] NTC18

η	hw	tw	hw/tw max	Verifica
1.2	15.2	0.6	55.46	Si

Verifiche a deformabilità

Mensola X: No; Mensola Y: No.

Frecce lungo X

Ascissa freccia	Combinazione	Freccia	Luce	L/f	L/f,min	Tipo	Verifica
74	SLE RA 1	0	170.7	10000	250	Totale	Si
74	SLE RA 31	0	170.7	10000	250	Totale	Si
74	SLE RA 30	0	170.7	10000	250	Totale	Si
74	SLE RA 29	0	170.7	10000	250	Totale	Si
74	SLE RA 28	0	170.7	10000	250	Totale	Si
68.3	SLE RA 2	0	170.7	10000	350	Variabile	Si
74	SLE RA 31	0	170.7	10000	350	Variabile	Si
74	SLE RA 30	0	170.7	10000	350	Variabile	Si
74	SLE RA 29	0	170.7	10000	350	Variabile	Si
74	SLE RA 28	0	170.7	10000	350	Variabile	Si

Frecce lungo Y

Ascissa freccia	Combinazione	Freccia	Luce	L/f	L/f,min	Tipo	Verifica
96.7	SLE RA 31	-0.1	170.7	1701.4	250	Totale	Si
96.7	SLE RA 33	-0.1	170.7	1701.4	250	Totale	Si
96.7	SLE RA 30	-0.1	170.7	1701.4	250	Totale	Si
96.7	SLE RA 32	-0.1	170.7	1701.4	250	Totale	Si
96.7	SLE RA 27	-0.099	170.7	1728.7	250	Totale	Si
108.1	SLE RA 31	-0.033	170.7	5112.4	350	Variabile	Si
108.1	SLE RA 33	-0.033	170.7	5112.4	350	Variabile	Si
108.1	SLE RA 30	-0.033	170.7	5112.4	350	Variabile	Si
108.1	SLE RA 32	-0.033	170.7	5112.4	350	Variabile	Si
108.1	SLE RA 27	-0.032	170.7	5371.7	350	Variabile	Si

Superelemento in acciaio composto dall'asta 8

Caratteristiche del materiale

Acciaio: S275, fyk = 2750

Caratteristiche geometriche

Lunghezza: 170.7
Nodo iniziale: 91 Nodo finale: 113
Cerniera iniziale: No Cerniera finale: No
Sovraresistenza: 0% Sisma Z: No

Caratteristiche della sezione

Sezione	Rotazione	Area	Jx	Jy	ix	iy	Wx	Wy	Wplx	Wply
HEA180	0	45.3	2512.55	924.65	7.45	4.52	293.87	102.74	325.17	156.53

Verifiche di resistenza

Verifiche a forza assiale §4.2.4.1.2.1 - §4.2.4.1.2.2 NTC18

X	Comb.	Sfruttamento	Classe	NEd	Nc,Rd	Nt,Rd	Riduzione da taglio	ρx	ρy	Verifica
0	SLU 98	0.268	1	-31819.2	118634.3		1	0	0	Si

Verifiche a forza assiale SLD §4.2.4.1.2.1 - §4.2.4.1.2.2 NTC18

X	Comb.	Sfruttamento	Classe	NEd	Nc,Rd	Nt,Rd	Riduzione da taglio	ρx	ρy	Verifica
0	SLD 4	0.119	1	-14160.4	118634.3		1	0	0	Si

Verifica a taglio X §4.2.4.1.2.4 NTC18

X	Comb.	Sfruttamento	VEd	Vc,Rd	Av	Interazione taglio-torsione	Riduzione torsione	Verifica
0	SLV 9	0.001	62.6	54396.6	36.18	Considerata	0.99	Si

Verifica a taglio Y §4.2.4.1.2.4 NTC18

X	Comb.	Sfruttamento	VEd	Vc,Rd	Av	Interazione taglio-torsione	Riduzione torsione	Verifica
0	SLU 97	0.267	5857.5	21950.9	14.52	Considerata	1	Si

Verifica a taglio Y SLD §4.2.4.1.2.4 NTC18

X	Comb.	Sfruttamento	VEd	Vc,Rd	Av	Interazione taglio-torsione	Riduzione torsione	Verifica
0	SLD 1	0.16	3517.7	21936.7	14.52	Considerata	1	Si

Verifica a torsione §4.2.4.1.2.5 NTC18

X	Comb.	Sfruttamento torsione	TEd	TRd	Riduzione taglio resistente	Sfruttamento taglio-torsione	τEd,totale	τRd	Verifica
170.7	SLV 10	0.014	253.1	18118.1	Considerata				Si

Verifica a torsione SLD §4.2.4.1.2.5 NTC18

X	Comb.	Sfruttamento torsione	TEd	TRd	Riduzione taglio resistente	Sfruttamento taglio-torsione	τEd,totale	τRd	Verifica
170.7	SLD 10	0.005	96.2	18118.1	Considerata				Si

Verifica a presso/tenso flessione retta X §§ 4.2.4.1.2.3 - 4.2.4.1.2.6 - 4.2.4.1.2.7 - 4.2.4.1.2.8 NTC18

Verifiche eseguite utilizzando la formula conservativa (6.2) §6.2.1 EN 1993-1-1:2005.

X	Comb.	Sfruttamento	Classe	NEd	NRd	Rid. NRd da VEd	Mx,Ed	Mx,Rd	Rid. Mx,Rd da VEd	Rid. Mx,Rd da NEd	ρx	ρy	Verifica
159.3	SLU 130	0.6	1	-31121.4	118634.3	1	-287403	851642	1		0	0	Si

Verifica a presso/tenso flessione deviata §§ 4.2.4.1.2.3 - 4.2.4.1.2.6 - 4.2.4.1.2.7 - 4.2.4.1.2.8 NTC18

Verifiche eseguite utilizzando la formula conservativa (6.2) §6.2.1 EN 1993-1-1:2005.

X	Comb.	Sfruttamento	Classe	NEd	NRd	Rid. NRd da VEd	Mx,Ed	Mx,Rd	My,Ed	My,Rd	Rid. Mx,Rd da VEd	Rid. Mx,Rd da NEd	Rid. My,Rd da VEd	Rid. My,Rd da NEd	α	β	ρx	ρy	Verifica
0	SLU 99	0.474	1	-31819.2	118634.3	1	174654	851642	-115	409967	1		1				0	0	Si

Verifica a presso/tenso flessione deviata SLD §§ 4.2.4.1.2.3 - 4.2.4.1.2.6 - 4.2.4.1.2.7 - 4.2.4.1.2.8 NTC18

Verifiche eseguite utilizzando la formula conservativa (6.2) §6.2.1 EN 1993-1-1:2005.

X	Comb.	Sfruttamento	Classe	NEd	NRd	Rid. NRd da VEd	Mx,Ed	Mx,Rd	My,Ed	My,Rd	Rid. Mx,Rd da VEd	Rid. Mx,Rd da NEd	Rid. My,Rd da VEd	Rid. My,Rd da NEd	α	β	ρx	ρy	Verifica
0	SLD 1	0.262	1	-14159.4	118634.3	1	118362	851642	-1514	409967	1		1				0	0	Si

Verifiche ad instabilità

Caratteristiche iniziali

Membratura principale per controllo snellezza; Calcolo di snellezze ed N critici condotti secondo gli assi principali;
Curva X: b; Curva Y: c; Svergolamento: Carico all'estradosso; Curva svergolamento: b;

Dati per instabilità attorno a x

Numero rit.	Presente	Ascissa	Campata	βx/m	Vincolo a entrambi estremi	λx/m	λVer
1	Si	0					
			1-2	1	Si	22.9	Si, (<200)
2	Si	170.7					

Dati per instabilità attorno a y

Numero rit.	Presente	Ascissa	Campata	βy/n	k,LT	kw,LT	Vincolo a entrambi estremi	λy/n	λVer
1	Si	0							
			1-2	1	1	1	Si	37.8	Si, (<200)
2	Si	170.7							

Verifica di stabilità per pressoflessione §C.4.2.4.1.3.3.2 NTC18

X	Comb.	Sfruttamento	Classe	NEd	NRk	Mx,Ed max	Mx,Rk	My,Ed max	My,Rk	χ,x	χ,y	kxx	kxy	kyx	kyy	χ,LT	Verifica
0	SLU 99	0.641	1	-31819.2	124566	287403.3	894223.7	114.6	430465.2	0.977	0.879	0.748	0.405	0.973	0.674	0.978	Si

Verifica di stabilità per pressoflessione SLD §C.4.2.4.1.3.3.2 NTC18

X	Comb.	Sfruttamento	Classe	NEd	NRk	Mx,Ed max	Mx,Rk	My,Ed max	My,Rk	χ,x	χ,y	kxx	kxy	kyx	kyy	χ,LT	Verifica
0	SLD 1	0.279	1	-14159.4	124566	118361.8	894223.7	1514.1	430465.2	0.977	0.879	0.687	0.414	0.986	0.69	0.978	Si

Verifica di stabilità a taglio anima Y §4.2.4.1.2.4 [4.2.27] NTC18

η	hw	tw	hw/tw max	Verifica
1.2	15.2	0.6	55.46	Si

Verifica di stabilità a taglio anima Y SLD §4.2.4.1.2.4 [4.2.27] NTC18

η	hw	tw	hw/tw max	Verifica
1.2	15.2	0.6	55.46	Si

Verifiche a deformabilità

Mensola X: No; Mensola Y: No.

Frecce lungo X

Ascissa freccia	Combinazione	Freccia	Luce	L/f	L/f,min	Tipo	Verifica
74	SLE RA 1	0	170.7	10000	250	Totale	Si
74	SLE RA 31	0	170.7	10000	250	Totale	Si
74	SLE RA 30	0	170.7	10000	250	Totale	Si
74	SLE RA 29	0	170.7	10000	250	Totale	Si
74	SLE RA 28	0	170.7	10000	250	Totale	Si
68.3	SLE RA 2	0	170.7	10000	350	Variabile	Si
74	SLE RA 31	0	170.7	10000	350	Variabile	Si
74	SLE RA 30	0	170.7	10000	350	Variabile	Si
74	SLE RA 29	0	170.7	10000	350	Variabile	Si
74	SLE RA 28	0	170.7	10000	350	Variabile	Si

Frecce lungo Y

Ascissa freccia	Combinazione	Freccia	Luce	L/f	L/f,min	Tipo	Verifica
96.7	SLE RA 31	-0.1	170.7	1700.6	250	Totale	Si
96.7	SLE RA 33	-0.1	170.7	1700.6	250	Totale	Si
96.7	SLE RA 30	-0.1	170.7	1700.6	250	Totale	Si
96.7	SLE RA 32	-0.1	170.7	1700.6	250	Totale	Si
96.7	SLE RA 27	-0.099	170.7	1728	250	Totale	Si
108.1	SLE RA 31	-0.033	170.7	5105.5	350	Variabile	Si
108.1	SLE RA 33	-0.033	170.7	5105.5	350	Variabile	Si
108.1	SLE RA 30	-0.033	170.7	5105.5	350	Variabile	Si
108.1	SLE RA 32	-0.033	170.7	5105.5	350	Variabile	Si
108.1	SLE RA 27	-0.032	170.7	5365.6	350	Variabile	Si

Superelemento in acciaio composto dall'asta 9

Caratteristiche del materiale

Acciaio: S275, fyk = 2750

Caratteristiche geometriche

Lunghezza: 148
Nodo iniziale: 27 Nodo finale: 26
Cerniera iniziale: Svincolo: M2, M3 Cerniera finale: No
Sovraresistenza: 0% Sisma Z: No

Caratteristiche della sezione

Sezione	Rotazione	Area	Jx	Jy	ix	iy	Wx	Wy	Wplx	Wply
HEA160	0	38.82	1674.7	615.62	6.57	3.98	220.36	76.95	245.43	117.67

Verifiche di resistenza

Verifiche a forza assiale §4.2.4.1.2.1 - §4.2.4.1.2.2 NTC18

X	Comb.	Sfruttamento	Classe	NEd	Nc,Rd	Nt,Rd	Riduzione da taglio	ρx	ρy	Verifica
148	SLU 130	0.154		15663.9		101662.9	1	0	0	Si

Verifiche a forza assiale SLD §4.2.4.1.2.1 - §4.2.4.1.2.2 NTC18

X	Comb.	Sfruttamento	Classe	NEd	Nc,Rd	Nt,Rd	Riduzione da taglio	ρx	ρy	Verifica
0	SLD 14	0.071		7251.3		101662.9	1	0	0	Si

Verifica a taglio Y §4.2.4.1.2.4 NTC18

X	Comb.	Sfruttamento	VEd	Vc,Rd	Av	Interazione taglio-torsione	Riduzione torsione	Verifica
148	SLV 16	0.042	-840.7	19957	13.26	Considerata	1	Si

Verifica a taglio Y SLD §4.2.4.1.2.4 NTC18

X	Comb.	Sfruttamento	VEd	Vc,Rd	Av	Interazione taglio-torsione	Riduzione torsione	Verifica
148	SLD 16	0.021	-411.7	20010.6	13.26	Considerata	1	Si

Verifica a torsione §4.2.4.1.2.5 NTC18

X	Comb.	Sfruttamento torsione	TEd	TRd	Riduzione taglio resistente	Sfruttamento taglio-torsione	τEd,totale	τRd	Verifica
148	SLV 8	0.036	529.8	14685.6	Considerata				Si

Verifica a torsione SLD §4.2.4.1.2.5 NTC18

X	Comb.	Sfruttamento torsione	TEd	TRd	Riduzione taglio resistente	Sfruttamento taglio-torsione	τEd,totale	τRd	Verifica
148	SLD 8	0.014	203.7	14685.6	Considerata				Si

Verifica a presso/tenso flessione retta X §§ 4.2.4.1.2.3 - 4.2.4.1.2.6 - 4.2.4.1.2.7 - 4.2.4.1.2.8 NTC18

Verifiche eseguite utilizzando la formula conservativa (6.2) §6.2.1 EN 1993-1-1:2005.

X	Comb.	Sfruttamento	Classe	NEd	NRd	Rid. NRd da VEd	Mx,Ed	Mx,Rd	Rid. Mx,Rd da VEd	Rid. Mx,Rd da NEd	ρx	ρy	Verifica
148	SLU 130	0.176	1	15663.9	101662.9	1	14021	642783	1		0	0	Si

Verifica a presso/tenso flessione retta X SLD §§ 4.2.4.1.2.3 - 4.2.4.1.2.6 - 4.2.4.1.2.7 - 4.2.4.1.2.8 NTC18

Verifiche eseguite utilizzando la formula conservativa (6.2) §6.2.1 EN 1993-1-1:2005.

X	Comb.	Sfruttamento	Classe	NEd	NRd	Rid. NRd da VEd	Mx,Ed	Mx,Rd	Rid. Mx,Rd da VEd	Rid. Mx,Rd da NEd	ρx	ρy	Verifica
148	SLD 13	0.161	1	7251.3	101662.9	1	57602	642783	1		0	0	Si

Verifica a presso/tenso flessione deviata §§ 4.2.4.1.2.3 - 4.2.4.1.2.6 - 4.2.4.1.2.7 - 4.2.4.1.2.8 NTC18

Verifiche eseguite utilizzando la formula conservativa (6.2) §6.2.1 EN 1993-1-1:2005.

X	Comb.	Sfruttamento	Classe	NEd	NRd	Rid. NRd da VEd	Mx,Ed	Mx,Rd	My,Ed	My,Rd	Rid. Mx,Rd da VEd	Rid. Mx,Rd da NEd	Rid. My,Rd da VEd	Rid. My,Rd da NEd	α	β	ρx	ρy	Verifica
148	SLV 13	0.274	1	8689.3	101662.9	1	121104	642783	159	308186	1		1				0	0	Si

Verifica a presso/tenso flessione deviata SLD §§ 4.2.4.1.2.3 - 4.2.4.1.2.6 - 4.2.4.1.2.7 - 4.2.4.1.2.8 NTC18

Verifiche eseguite utilizzando la formula conservativa (6.2) §6.2.1 EN 1993-1-1:2005.

X	Comb.	Sfruttamento	Classe	NEd	NRd	Rid. NRd da VEd	Mx,Ed	Mx,Rd	My,Ed	My,Rd	Rid. Mx,Rd da VEd	Rid. Mx,Rd da NEd	Rid. My,Rd da VEd	Rid. My,Rd da NEd	α	β	ρx	ρy	Verifica
148	SLD 10	0.098	1	6437.2	101662.9	1	21588	642783	201	308186	1		1				0	0	Si

Verifiche ad instabilità

Caratteristiche iniziali

Membratura principale per controllo snellezza; Calcolo di snellezze ed N critici condotti secondo gli assi principali;
Curva X: b; Curva Y: c; Svergolamento: Carico all'estradosso; Curva svergolamento: b;

Dati per instabilità attorno a x

Numero rit.	Presente	Ascissa	Campata	βx/m	Vincolo a entrambi estremi	λx/m	λVer
1	Si	0					
			1-2	1	Si	22.5	Si, (<200)
2	Si	148					

Dati per instabilità attorno a y

Numero rit.	Presente	Ascissa	Campata	βy/n	k,LT	kw,LT	Vincolo a entrambi estremi	λy/n	λVer
1	Si	0							
			1-2	1	1	1	Si	37.2	Si, (<200)
2	Si	148							

Verifica a svergolamento con trazione §4.2.4.1.3.2 NTC18 - §5.5.3 ENV 1993-1-1:1994

X	Comb.	Sfruttamento	Classe	Obblig.	NEd	Mx,Ed	Mx,Eff,Ed	Mb,Rd,x	χ,LT	λ adim. LT	L,LT	M,critico	Verifica
69.1	SLV 4	0.059	1	Si	3482	-51613	-37776.4	642783.4	1	0.278	148	8702008.8	Si

Verifica a svergolamento con trazione SLD §4.2.4.1.3.2 NTC18 - §5.5.3 ENV 1993-1-1:1994

X	Comb.	Sfruttamento	Classe	Obblig.	NEd	Mx,Ed	Mx,Eff,Ed	Mb,Rd,x	χ,LT	λ adim. LT	L,LT	M,critico	Verifica
148	SLD 16	0.045	1	Si	7250	57597.3	28787.5	642783.4	1	0.278	148	8702008.8	Si

Verifica di stabilità per tenso-flessione deviata §5.5.3 - §5.5.4 ENV 1993-1-1:1994

X	Comb.	Sfruttamento	Classe	NEd	Mx,Ed	Mx,Eff,Ed	My,Ed	χ,LT	kLT	ky	M,critico	Wx	Wy	Verifica
148	SLV 4	0.148	1	3482	-108819.4	-94982.8	-159.4	1	1	1	8702008.8	245.4	117.7	Si

Verifica di stabilità a taglio anima Y §4.2.4.1.2.4 [4.2.27] NTC18

η	hw	tw	hw/tw max	Verifica
1.2	13.4	0.6	55.46	Si

Verifica di stabilità a taglio anima Y SLD §4.2.4.1.2.4 [4.2.27] NTC18

η	hw	tw	hw/tw max	Verifica
1.2	13.4	0.6	55.46	Si

Verifiche a deformabilità

Mensola X: No; Mensola Y: No.

Frecce lungo X

Ascissa freccia	Combinazione	Freccia	Luce	L/f	L/f,min	Tipo	Verifica
14.8	SLE RA 1	0	148	10000	250	Totale	Si
98.7	SLE RA 31	0	148	10000	250	Totale	Si
98.7	SLE RA 30	0	148	10000	250	Totale	Si
98.7	SLE RA 29	0	148	10000	250	Totale	Si
98.7	SLE RA 28	0	148	10000	250	Totale	Si

Ascissa freccia	Combinazione	Freccia	Luce	L/f	L/f,min	Tipo	Verifica
19.7	SLE RA 2	0	148	10000	350	Variabile	Si
78.9	SLE RA 31	0	148	10000	350	Variabile	Si
78.9	SLE RA 30	0	148	10000	350	Variabile	Si
78.9	SLE RA 29	0	148	10000	350	Variabile	Si
78.9	SLE RA 28	0	148	10000	350	Variabile	Si

Frecce lungo Y

Ascissa freccia	Combinazione	Freccia	Luce	L/f	L/f,min	Tipo	Verifica
88.8	SLE RA 1	0.002	148	10000	250	Totale	Si
88.8	SLE RA 31	0.003	148	10000	250	Totale	Si
88.8	SLE RA 30	0.003	148	10000	250	Totale	Si
88.8	SLE RA 29	0.003	148	10000	250	Totale	Si
88.8	SLE RA 28	0.003	148	10000	250	Totale	Si
83.9	SLE RA 2	0	148	10000	350	Variabile	Si
83.9	SLE RA 31	0.002	148	10000	350	Variabile	Si
83.9	SLE RA 30	0.002	148	10000	350	Variabile	Si
83.9	SLE RA 29	0.002	148	10000	350	Variabile	Si
83.9	SLE RA 28	0.002	148	10000	350	Variabile	Si

Superelemento in acciaio composto dall'asta 10

Caratteristiche del materiale

Acciaio: S275, fyk = 2750

Caratteristiche geometriche

Lunghezza: 299
Nodo iniziale: 26 Nodo finale: 25
Cerniera iniziale: No Cerniera finale: No
Sovraresistenza: 0% Sisma Z: No

Caratteristiche della sezione

Sezione	Rotazione	Area	Jx	Jy	ix	iy	Wx	Wy	Wplx	Wply
HEA160	0	38.82	1674.7	615.62	6.57	3.98	220.36	76.95	245.43	117.67

Verifiche di resistenza

Verifiche a forza assiale §4.2.4.1.2.1 - §4.2.4.1.2.2 NTC18

X	Comb.	Sfruttamento	Classe	NEd	Nc,Rd	Nt,Rd	Riduzione da taglio	ρx	ρy	Verifica
289	SLU 131	0.207		21087.1		101662.9	1	0	0	Si

Verifiche a forza assiale SLD §4.2.4.1.2.1 - §4.2.4.1.2.2 NTC18

X	Comb.	Sfruttamento	Classe	NEd	Nc,Rd	Nt,Rd	Riduzione da taglio	ρx	ρy	Verifica
299	SLD 11	0.069		7029.9		101662.9	1	0	0	Si

Verifica a taglio Y §4.2.4.1.2.4 NTC18

X	Comb.	Sfruttamento	VEd	Vc,Rd	Av	Interazione taglio-torsione	Riduzione torsione	Verifica
0	SLV 13	0.041	814.5	20045.7	13.26	Considerata	1	Si

Verifica a taglio Y SLD §4.2.4.1.2.4 NTC18

X	Comb.	Sfruttamento	VEd	Vc,Rd	Av	Interazione taglio-torsione	Riduzione torsione	Verifica
0	SLD 14	0.019	389.7	20045.7	13.26	Considerata	1	Si

Verifica a presso/tenso flessione retta X §§ 4.2.4.1.2.3 - 4.2.4.1.2.6 - 4.2.4.1.2.7 - 4.2.4.1.2.8 NTC18

Verifiche eseguite utilizzando la formula conservativa (6.2) §6.2.1 EN 1993-1-1:2005.

X	Comb.	Sfruttamento	Classe	NEd	NRd	Rid. NRd da VEd	Mx,Ed	Mx,Rd	Rid. Mx,Rd da VEd	Rid. Mx,Rd da NEd	ρx	ρy	Verifica
0	SLU 98	0.229	1	21087.1	101662.9	1	14021	642783	1		0	0	Si

Verifica a presso/tenso flessione retta Y SLD §§ 4.2.4.1.2.3 - 4.2.4.1.2.6 - 4.2.4.1.2.7 - 4.2.4.1.2.8 NTC18

Verifiche eseguite utilizzando la formula conservativa (6.2) §6.2.1 EN 1993-1-1:2005.

X	Comb.	Sfruttamento	Classe	NEd	NRd	Rid. NRd da VEd	My,Ed	My,Rd	Rid. My,Rd da VEd	Rid. My,Rd da NEd	ρx	ρy	Verifica
179.4	SLD 9	0.071	1	7025.5	101662.9	1	566	308186	1		0	0	Si

Verifica a presso/tenso flessione deviata §§ 4.2.4.1.2.3 - 4.2.4.1.2.6 - 4.2.4.1.2.7 - 4.2.4.1.2.8 NTC18

Verifiche eseguite utilizzando la formula conservativa (6.2) §6.2.1 EN 1993-1-1:2005.

X	Comb.	Sfruttamento	Classe	NEd	NRd	Rid. NRd da VEd	Mx,Ed	Mx,Rd	My,Ed	My,Rd	Rid. Mx,Rd da VEd	Rid. Mx,Rd da NEd	Rid. My,Rd da VEd	Rid. My,Rd da NEd	α	β	ρx	ρy	Verifica
0	SLV 16	0.259	1	7029.5	101662.9	1	121092	642783	-459	308186	1		1				0	0	Si

Verifica a presso/tenso flessione deviata SLD §§ 4.2.4.1.2.3 - 4.2.4.1.2.6 - 4.2.4.1.2.7 - 4.2.4.1.2.8 NTC18

Verifiche eseguite utilizzando la formula conservativa (6.2) §6.2.1 EN 1993-1-1:2005.

X	Comb.	Sfruttamento	Classe	NEd	NRd	Rid. NRd da VEd	Mx,Ed	Mx,Rd	My,Ed	My,Rd	Rid. Mx,Rd da VEd	Rid. Mx,Rd da NEd	Rid. My,Rd da VEd	Rid. My,Rd da NEd	α	β	ρx	ρy	Verifica
0	SLD 16	0.159	1	7028.4	101662.9	1	57597	642783	-178	308186	1		1				0	0	Si

Verifiche ad instabilità

Caratteristiche iniziali

Membratura principale per controllo snellezza; Calcolo di snellezze ed N critici condotti secondo gli assi principali;
Curva X: b; Curva Y: c; Svergolamento: Carico all'estradosso; Curva svergolamento: b;

Dati per instabilità attorno a x

Numero rit.	Presente	Ascissa	Campata	βx/m	Vincolo a entrambi estremi	λx/m	λVer
1	Si	0					
			1-2	1	Si	45.5	Si, (<200)
2	Si	299					

Dati per instabilità attorno a y

Numero rit.	Presente	Ascissa	Campata	βy/n	k,LT	kw,LT	Vincolo a entrambi estremi	λy/n	λVer
1	Si	0							
			1-2	1	1	1	Si	75.1	Si, (<200)
2	Si	299							

Verifica di stabilità per tenso-flessione deviata §5.5.3 - §5.5.4 ENV 1993-1-1:1994

X	Comb.	Sfruttamento	Classe	NEd	Mx,Ed	Mx,Eff,Ed	My,Ed	χ,LT	kLT	ky	M,critico	Wx	Wy	Verifica
299	SLV 2	0.175	1	7026	121104.5	93184.9	446.3	0.836	1	1	1151208.3	245.4	117.7	Si

Verifica di stabilità per tenso-flessione deviata SLD §5.5.3 - §5.5.4 ENV 1993-1-1:1994

X	Comb.	Sfruttamento	Classe	NEd	Mx,Ed	Mx,Eff,Ed	My,Ed	χ,LT	kLT	ky	M,critico	Wx	Wy	Verifica
299	SLD 4	0.056	1	7028.4	57597.3	29668.1	-177.9	0.836	1	1	1151208.3	245.4	117.7	Si

Verifica di stabilità a taglio anima Y §4.2.4.1.2.4 [4.2.27] NTC18

η	hw	tw	hw/tw max	Verifica
1.2	13.4	0.6	55.46	Si

Verifica di stabilità a taglio anima Y SLD §4.2.4.1.2.4 [4.2.27] NTC18

η	hw	tw	hw/tw max	Verifica
1.2	13.4	0.6	55.46	Si

Verifiche a deformabilità

Mensola X: No; Mensola Y: No.

Frecce lungo X

Ascissa freccia	Combinazione	Freccia	Luce	L/f	L/f,min	Tipo	Verifica
149.5	SLE RA 1	0	299	10000	250	Totale	Si
149.5	SLE RA 31	0	299	10000	250	Totale	Si
149.5	SLE RA 30	0	299	10000	250	Totale	Si
149.5	SLE RA 29	0	299	10000	250	Totale	Si
149.5	SLE RA 28	0	299	10000	250	Totale	Si
149.5	SLE RA 2	0	299	10000	350	Variabile	Si
149.5	SLE RA 31	0	299	10000	350	Variabile	Si
149.5	SLE RA 30	0	299	10000	350	Variabile	Si
149.5	SLE RA 29	0	299	10000	350	Variabile	Si
149.5	SLE RA 28	0	299	10000	350	Variabile	Si

Frecce lungo Y

Ascissa freccia	Combinazione	Freccia	Luce	L/f	L/f,min	Tipo	Verifica
149.5	SLE RA 1	0.01	299	10000	250	Totale	Si
149.5	SLE RA 31	0.023	299	10000	250	Totale	Si
149.5	SLE RA 30	0.023	299	10000	250	Totale	Si
149.5	SLE RA 29	0.022	299	10000	250	Totale	Si
149.5	SLE RA 28	0.022	299	10000	250	Totale	Si
149.5	SLE RA 2	0	299	10000	350	Variabile	Si
149.5	SLE RA 31	0.013	299	10000	350	Variabile	Si
149.5	SLE RA 30	0.013	299	10000	350	Variabile	Si
149.5	SLE RA 29	0.012	299	10000	350	Variabile	Si
149.5	SLE RA 28	0.012	299	10000	350	Variabile	Si

Superelemento in acciaio composto dall'asta 11

Caratteristiche del materiale

Acciaio: S275, fyk = 2750

Caratteristiche geometriche

Lunghezza: 148
Nodo iniziale: 25 Nodo finale: 24
Cerniera iniziale: No Cerniera finale: Svincolo: M2, M3
Sovraresistenza: 0% Sisma Z: No

Caratteristiche della sezione

Sezione	Rotazione	Area	Jx	Jy	ix	iy	Wx	Wy	Wplx	Wply
HEA160	0	38.82	1674.7	615.62	6.57	3.98	220.36	76.95	245.43	117.67

Verifiche di resistenza

Verifiche a forza assiale §4.2.4.1.2.1 - §4.2.4.1.2.2 NTC18

X	Comb.	Sfruttamento	Classe	NEd	Nc,Rd	Nt,Rd	Riduzione da taglio	ρx	ρy	Verifica
148	SLU 130	0.154		15665		101662.9	1	0	0	Si

Verifiche a forza assiale SLD §4.2.4.1.2.1 - §4.2.4.1.2.2 NTC18

X	Comb.	Sfruttamento	Classe	NEd	Nc,Rd	Nt,Rd	Riduzione da taglio	ρx	ρy	Verifica
0	SLD 1	0.071		7251.3		101662.9	1	0	0	Si

Verifica a taglio Y §4.2.4.1.2.4 NTC18

X	Comb.	Sfruttamento	VEd	Vc,Rd	Av	Interazione taglio-torsione	Riduzione torsione	Verifica
0	SLV 4	0.042	840.7	19957	13.26	Considerata	1	Si

Verifica a taglio Y SLD §4.2.4.1.2.4 NTC18

X	Comb.	Sfruttamento	VEd	Vc,Rd	Av	Interazione taglio-torsione	Riduzione torsione	Verifica
0	SLD 3	0.021	411.7	20010.6	13.26	Considerata	1	Si

Verifica a torsione §4.2.4.1.2.5 NTC18

X	Comb.	Sfruttamento torsione	TEd	TRd	Riduzione taglio resistente	Sfruttamento taglio-torsione	τEd,totale	τRd	Verifica
69.1	SLV 12	0.036	-529.8	14685.6	Considerata				Si

Verifica a torsione SLD §4.2.4.1.2.5 NTC18

X	Comb.	Sfruttamento torsione	TEd	TRd	Riduzione taglio resistente	Sfruttamento taglio-torsione	τEd,totale	τRd	Verifica
69.1	SLD 12	0.014	-203.7	14685.6	Considerata				Si

Verifica a presso/tenso flessione retta X §§ 4.2.4.1.2.3 - 4.2.4.1.2.6 - 4.2.4.1.2.7 - 4.2.4.1.2.8 NTC18

Verifiche eseguite utilizzando la formula conservativa (6.2) §6.2.1 EN 1993-1-1:2005.

X	Comb.	Sfruttamento	Classe	NEd	NRd	Rid. NRd da VEd	Mx,Ed	Mx,Rd	Rid. Mx,Rd da VEd	Rid. Mx,Rd da NEd	ρx	ρy	Verifica
0	SLU 130	0.176	1	15665	101662.9	1	13869	642783	1		0	0	Si

Verifica a presso/tenso flessione retta X SLD §§ 4.2.4.1.2.3 - 4.2.4.1.2.6 - 4.2.4.1.2.7 - 4.2.4.1.2.8 NTC18

Verifiche eseguite utilizzando la formula conservativa (6.2) §6.2.1 EN 1993-1-1:2005.

X	Comb.	Sfruttamento	Classe	NEd	NRd	Rid. NRd da VEd	Mx,Ed	Mx,Rd	Rid. Mx,Rd da VEd	Rid. Mx,Rd da NEd	ρx	ρy	Verifica
0	SLD 1	0.161	1	7251.3	101662.9	1	57602	642783	1		0	0	Si

Verifica a presso/tenso flessione deviata §§ 4.2.4.1.2.3 - 4.2.4.1.2.6 - 4.2.4.1.2.7 - 4.2.4.1.2.8 NTC18

Verifiche eseguite utilizzando la formula conservativa (6.2) §6.2.1 EN 1993-1-1:2005.

X	Comb.	Sfruttamento	Classe	NEd	NRd	Rid. NRd da VEd	Mx,Ed	Mx,Rd	My,Ed	My,Rd	Rid. Mx,Rd da VEd	Rid. Mx,Rd da NEd	Rid. My,Rd da VEd	Rid. My,Rd da NEd	α	β	ρx	ρy	Verifica
0	SLV 1	0.274	1	8689.3	101662.9	1	121104	642783	159	308186	1		1				0	0	Si

Verifica a presso/tenso flessione deviata SLD §§ 4.2.4.1.2.3 - 4.2.4.1.2.6 - 4.2.4.1.2.7 - 4.2.4.1.2.8 NTC18

Verifiche eseguite utilizzando la formula conservativa (6.2) §6.2.1 EN 1993-1-1:2005.

X	Comb.	Sfruttamento	Classe	NEd	NRd	Rid. NRd da VEd	Mx,Ed	Mx,Rd	My,Ed	My,Rd	Rid. Mx,Rd da VEd	Rid. Mx,Rd da NEd	Rid. My,Rd da VEd	Rid. My,Rd da NEd	α	β	ρx	ρy	Verifica
0	SLD 5	0.098	1	6437.2	101662.9	1	21588	642783	201	308186	1		1				0	0	Si

Verifiche ad instabilità

Caratteristiche iniziali

Membratura principale per controllo snellezza; Calcolo di snellezze ed N critici condotti secondo gli assi principali;
Curva X: b; Curva Y: c; Svergolamento: Carico all'estradosso; Curva svergolamento: b;

Dati per instabilità attorno a x

Numero rit.	Presente	Ascissa	Campata	βx/m	Vincolo a entrambi estremi	λx/m	λVer
1	Si	0					
			1-2	1	Si	22.5	Si, (<200)
2	Si	148					

Dati per instabilità attorno a y

Numero rit.	Presente	Ascissa	Campata	βy/n	k,LT	kw,LT	Vincolo a entrambi estremi	λy/n	λVer
1	Si	0							
			1-2	1	1	1	Si	37.2	Si, (<200)
2	Si	148							

Verifica a svergolamento con trazione §4.2.4.1.3.2 NTC18 - §5.5.3 ENV 1993-1-1:1994

X	Comb.	Sfruttamento	Classe	Obblig.	NEd	Mx,Ed	Mx,Eff,Ed	Mb,Rd,x	χ,LT	λ adim. LT	L,LT	M,critico	Verifica
78.9	SLV 16	0.059	1	Si	3482	-51613	-37776.5	642783.4	1	0.278	148	8702008.8	Si

Verifica a svergolamento con trazione SLD §4.2.4.1.3.2 NTC18 - §5.5.3 ENV 1993-1-1:1994

X	Comb.	Sfruttamento	Classe	Obblig.	NEd	Mx,Ed	Mx,Eff,Ed	Mb,Rd,x	χ,LT	λ adim. LT	L,LT	M,critico	Verifica
0	SLD 3	0.045	1	Si	7250	57597.3	28787.4	642783.4	1	0.278	148	8702008.8	Si

Verifica di stabilità per tenso-flessione deviata §5.5.3 - §5.5.4 ENV 1993-1-1:1994

X	Comb.	Sfruttamento	Classe	NEd	Mx,Ed	Mx,Eff,Ed	My,Ed	χ,LT	kLT	ky	M,critico	Wx	Wy	Verifica
0	SLV 15	0.148	1	3482	-108819.4	-94982.9	-159.4	1	1	1	8702008.8	245.4	117.7	Si

Verifica di stabilità a taglio anima Y §4.2.4.1.2.4 [4.2.27] NTC18

η	hw	tw	hw/tw max	Verifica
1.2	13.4	0.6	55.46	Si

Verifica di stabilità a taglio anima Y SLD §4.2.4.1.2.4 [4.2.27] NTC18

η	hw	tw	hw/tw max	Verifica
1.2	13.4	0.6	55.46	Si

Verifiche a deformabilità

Mensola X: No; Mensola Y: No.

Frecce lungo X

Ascissa freccia	Combinazione	Freccia	Luce	L/f	L/f,min	Tipo	Verifica
59.2	SLE RA 1	0	148	10000	250	Totale	Si
69.1	SLE RA 31	0	148	10000	250	Totale	Si
69.1	SLE RA 30	0	148	10000	250	Totale	Si
69.1	SLE RA 29	0	148	10000	250	Totale	Si
69.1	SLE RA 28	0	148	10000	250	Totale	Si
128.3	SLE RA 2	0	148	10000	350	Variabile	Si
69.1	SLE RA 31	0	148	10000	350	Variabile	Si
69.1	SLE RA 30	0	148	10000	350	Variabile	Si
69.1	SLE RA 29	0	148	10000	350	Variabile	Si
69.1	SLE RA 28	0	148	10000	350	Variabile	Si

Frecce lungo Y

Ascissa freccia	Combinazione	Freccia	Luce	L/f	L/f,min	Tipo	Verifica
59.2	SLE RA 1	0.002	148	10000	250	Totale	Si
59.2	SLE RA 31	0.003	148	10000	250	Totale	Si
59.2	SLE RA 30	0.003	148	10000	250	Totale	Si
59.2	SLE RA 29	0.003	148	10000	250	Totale	Si
59.2	SLE RA 28	0.003	148	10000	250	Totale	Si
64.1	SLE RA 2	0	148	10000	350	Variabile	Si
64.1	SLE RA 31	0.002	148	10000	350	Variabile	Si
64.1	SLE RA 30	0.002	148	10000	350	Variabile	Si
64.1	SLE RA 29	0.001	148	10000	350	Variabile	Si
64.1	SLE RA 28	0.001	148	10000	350	Variabile	Si

Superelemento in acciaio composto dall'asta 12

Caratteristiche del materiale

Acciaio: S275, fyk = 2750

Caratteristiche geometriche

Lunghezza: 215.2
Nodo iniziale: 3 Nodo finale: 26
Cerniera iniziale: Svincolo: M2, M3 Cerniera finale: Svincolo: M2, M3
Sovraresistenza: 0% Sisma Z: No

Caratteristiche della sezione

Sezione	Rotazione	Area	Jx	Jy	ix	iy	Wx	Wy	Wplx	Wply
HEA160	0	38.82	1674.7	615.62	6.57	3.98	220.36	76.95	245.43	117.67

Verifiche di resistenza

Verifiche a forza assiale §4.2.4.1.2.1 - §4.2.4.1.2.2 NTC18

X	Comb.	Sfruttamento	Classe	NEd	Nc,Rd	Nt,Rd	Riduzione da taglio	ρx	ρy	Verifica
215.2	SLV 4	0.035		3525.7		101662.9	1	0	0	Si

Verifiche a forza assiale SLD §4.2.4.1.2.1 - §4.2.4.1.2.2 NTC18

X	Comb.	Sfruttamento	Classe	NEd	Nc,Rd	Nt,Rd	Riduzione da taglio	ρx	ρy	Verifica
215.2	SLD 4	0.018		1792		101662.9	1	0	0	Si

Verifica a taglio Y §4.2.4.1.2.4 NTC18

X	Comb.	Sfruttamento	VEd	Vc,Rd	Av	Interazione taglio-torsione	Riduzione torsione	Verifica
0	SLU 97	0.002	37.7	20045.7	13.26	Considerata	1	Si

Verifica a taglio Y SLD §4.2.4.1.2.4 NTC18

X	Comb.	Sfruttamento	VEd	Vc,Rd	Av	Interazione taglio-torsione	Riduzione torsione	Verifica
0	SLD 12	0.001	29	19890.5	13.26	Considerata	0.99	Si

Verifica a torsione §4.2.4.1.2.5 NTC18

X	Comb.	Sfruttamento torsione	TEd	TRd	Riduzione taglio resistente	Sfruttamento taglio-torsione	τEd,totale	τRd	Verifica
100.4	SLV 12	0.05	740.4	14685.6	Considerata				Si

Verifica a torsione SLD §4.2.4.1.2.5 NTC18

X	Comb.	Sfruttamento torsione	TEd	TRd	Riduzione taglio resistente	Sfruttamento taglio-torsione	τEd,totale	τRd	Verifica
100.4	SLD 12	0.019	283.1	14685.6	Considerata				Si

Verifica a flessione semplice X SLD §§ 4.2.4.1.2.3 - 4.2.4.1.2.6 - 4.2.4.1.2.7 - 4.2.4.1.2.8 NTC18

X	Comb.	Sfruttamento	Classe	Mx,Ed	Mx,Rd	Rid. Mx,Rd da VEd	ρx	ρy	Verifica
164.9	SLD 11	0.002	1	-1117.1	642783.4	1	0	0	Si

Verifica a presso/tenso flessione retta X §§ 4.2.4.1.2.3 - 4.2.4.1.2.6 - 4.2.4.1.2.7 - 4.2.4.1.2.8 NTC18

Verifiche eseguite utilizzando la formula conservativa (6.2) §6.2.1 EN 1993-1-1:2005.

X	Comb.	Sfruttamento	Classe	NEd	NRd	Rid. NRd da VEd	Mx,Ed	Mx,Rd	Rid. Mx,Rd da VEd	Rid. Mx,Rd da NEd	ρx	ρy	Verifica
107.6	SLV 4	0.037	1	3510.5	101662.9	1	-1561	642783	1		0	0	Si

Verifica a presso/tenso flessione retta X SLD §§ 4.2.4.1.2.3 - 4.2.4.1.2.6 - 4.2.4.1.2.7 - 4.2.4.1.2.8 NTC18

Verifiche eseguite utilizzando la formula conservativa (6.2) §6.2.1 EN 1993-1-1:2005.

X	Comb.	Sfruttamento	Classe	NEd	NRd	Rid. NRd da VEd	Mx,Ed	Mx,Rd	Rid. Mx,Rd da VEd	Rid. Mx,Rd da NEd	ρx	ρy	Verifica
107.6	SLD 4	0.02	1	1776.8	101662.9	1	-1561	642783	1		0	0	Si

Verifiche ad instabilità

Caratteristiche iniziali

Membratura principale per controllo snellezza; Calcolo di snellezze ed N critici condotti secondo gli assi principali;
Curva X: b; Curva Y: c; Svergolamento: Carico all'estradosso; Curva svergolamento: b;

Dati per instabilità attorno a x

Numero rit.	Presente	Ascissa	Campata	βx/m	Vincolo a entrambi estremi	λx/m	λVer
1	Si	0					
			1-2	1	Si	32.8	Si, (<200)
2	Si	215.2					

Dati per instabilità attorno a y

Numero rit.	Presente	Ascissa	Campata	βy/n	k,LT	kw,LT	Vincolo a entrambi estremi	λy/n	λVer
1	Si	0							
			1-2	1	1	1	Si	54	Si, (<200)
2	Si	215.2							

Verifica a svergolamento SLD §4.2.4.1.3.2 NTC18

X	Comb.	Sfruttamento	Classe	Obblig.	Mx,Ed	Mb,Rd,x	χ,LT	λ adim. LT	L,LT	M,critico	Verifica
164.9	SLD 11	0.002	1	Si	-1117.1	588430.1	0.915	0.604	215.2	1851896.4	Si

Verifica a svergolamento con trazione §4.2.4.1.3.2 NTC18 - §5.5.3 ENV 1993-1-1:1994

X	Comb.	Sfruttamento	Classe	Obblig.	NEd	Mx,Ed	Mx,Eff,Ed	Mb,Rd,x	χ,LT	λ adim. LT	L,LT	M,critico	Verifica
107.6	SLU 68	0	1	Si	483.4	-2029.5	-108.4	588430.1	0.915	0.604	215.2	1851896.4	Si

Verifica di stabilità per pressoflessione §C.4.2.4.1.3.3.2 NTC18

X	Comb.	Sfruttamento	Classe	NEd	NRk	Mx,Ed max	Mx,Rk	My,Ed max	My,Rk	χ,x	χ,y	kxx	kxy	kyx	kyy	χ,LT	Verifica
0	SLV 14	0.038	1	-2782	106746.1	1561.1	674922.6	1.1	323595.1	0.935	0.772	0.955	0.583	0.997	0.972	0.915	Si

Verifica di stabilità per pressoflessione SLD §C.4.2.4.1.3.3.2 NTC18

X	Comb.	Sfruttamento	Classe	NEd	NRk	Mx,Ed max	Mx,Rk	My,Ed max	My,Rk	χ,x	χ,y	kxx	kxy	kyx	kyy	χ,LT	Verifica
0	SLD 14	0.016	1	-1048.2	106746.1	1561.1	674922.6	1.1	323595.1	0.935	0.772	0.952	0.575	0.999	0.958	0.915	Si

Verifica di stabilità a taglio anima Y §4.2.4.1.2.4 [4.2.27] NTC18

η	hw	tw	hw/tw max	Verifica
1.2	13.4	0.6	55.46	Si

Verifica di stabilità a taglio anima Y SLD §4.2.4.1.2.4 [4.2.27] NTC18

η	hw	tw	hw/tw max	Verifica
1.2	13.4	0.6	55.46	Si

Verifiche a deformabilità

Mensola X: No; Mensola Y: No.

Frecce lungo X

Ascissa freccia	Combinazione	Freccia	Luce	L/f	L/f,min	Tipo	Verifica
107.6	SLE RA 1	0	215.2	10000	250	Totale	Si
107.6	SLE RA 31	0	215.2	10000	250	Totale	Si
107.6	SLE RA 30	0	215.2	10000	250	Totale	Si
107.6	SLE RA 29	0	215.2	10000	250	Totale	Si
107.6	SLE RA 28	0	215.2	10000	250	Totale	Si
193.6	SLE RA 2	0	215.2	10000	350	Variabile	Si
157.8	SLE RA 31	0	215.2	10000	350	Variabile	Si
157.8	SLE RA 30	0	215.2	10000	350	Variabile	Si
157.8	SLE RA 29	0	215.2	10000	350	Variabile	Si
157.8	SLE RA 28	0	215.2	10000	350	Variabile	Si

Frecce lungo Y

Ascissa freccia	Combinazione	Freccia	Luce	L/f	L/f,min	Tipo	Verifica
107.6	SLE RA 1	-0.002	215.2	10000	250	Totale	Si
107.6	SLE RA 31	-0.002	215.2	10000	250	Totale	Si
107.6	SLE RA 30	-0.002	215.2	10000	250	Totale	Si
107.6	SLE RA 29	-0.002	215.2	10000	250	Totale	Si
107.6	SLE RA 28	-0.002	215.2	10000	250	Totale	Si
186.5	SLE RA 2	0	215.2	10000	350	Variabile	Si
193.6	SLE RA 31	0	215.2	10000	350	Variabile	Si
193.6	SLE RA 30	0	215.2	10000	350	Variabile	Si
193.6	SLE RA 29	0	215.2	10000	350	Variabile	Si
193.6	SLE RA 28	0	215.2	10000	350	Variabile	Si

Superelemento in acciaio composto dall'asta 13

Caratteristiche del materiale

Acciaio: S275, fyk = 2750

Caratteristiche geometriche

Lunghezza: 215.2
Nodo iniziale: 2 Nodo finale: 25
Cerniera iniziale: Svincolo: M2, M3 Cerniera finale: Svincolo: M2, M3
Sovraresistenza: 0% Sisma Z: No

Caratteristiche della sezione

Sezione	Rotazione	Area	Jx	Jy	ix	iy	Wx	Wy	Wplx	Wply
HEA160	0	38.82	1674.7	615.62	6.57	3.98	220.36	76.95	245.43	117.67

Verifiche di resistenza

Verifiche a forza assiale §4.2.4.1.2.1 - §4.2.4.1.2.2 NTC18

X	Comb.	Sfruttamento	Classe	NEd	Nc,Rd	Nt,Rd	Riduzione da taglio	ρx	ρy	Verifica
215.2	SLV 16	0.035		3525.7		101662.9	1	0	0	Si

Verifiche a forza assiale SLD §4.2.4.1.2.1 - §4.2.4.1.2.2 NTC18

X	Comb.	Sfruttamento	Classe	NEd	Nc,Rd	Nt,Rd	Riduzione da taglio	ρx	ρy	Verifica
215.2	SLD 16	0.018		1792		101662.9	1	0	0	Si

Verifica a taglio Y §4.2.4.1.2.4 NTC18

X	Comb.	Sfruttamento	VEd	Vc,Rd	Av	Interazione taglio-torsione	Riduzione torsione	Verifica
0	SLU 95	0.002	37.7	20045.7	13.26	Considerata	1	Si

Verifica a taglio Y SLD §4.2.4.1.2.4 NTC18

X	Comb.	Sfruttamento	VEd	Vc,Rd	Av	Interazione taglio-torsione	Riduzione torsione	Verifica
0	SLD 8	0.001	29	19890.5	13.26	Considerata	0.99	Si

Verifica a torsione §4.2.4.1.2.5 NTC18

X	Comb.	Sfruttamento torsione	TEd	TRd	Riduzione taglio resistente	Sfruttamento taglio-torsione	τEd,totale	τRd	Verifica
215.2	SLV 8	0.05	-740.4	14685.6	Considerata				Si

Verifica a torsione SLD §4.2.4.1.2.5 NTC18

X	Comb.	Sfruttamento torsione	TEd	TRd	Riduzione taglio resistente	Sfruttamento taglio-torsione	τEd,totale	τRd	Verifica
215.2	SLD 8	0.019	-283.1	14685.6	Considerata				Si

Verifica a flessione semplice X SLD §§ 4.2.4.1.2.3 - 4.2.4.1.2.6 - 4.2.4.1.2.7 - 4.2.4.1.2.8 NTC18

X	Comb.	Sfruttamento	Classe	Mx,Ed	Mx,Rd	Rid. Mx,Rd da VEd	ρx	ρy	Verifica
164.9	SLD 7	0.002	1	-1117.1	642783.4	1	0	0	Si

Verifica a presso/tenso flessione retta X §§ 4.2.4.1.2.3 - 4.2.4.1.2.6 - 4.2.4.1.2.7 - 4.2.4.1.2.8 NTC18

Verifiche eseguite utilizzando la formula conservativa (6.2) §6.2.1 EN 1993-1-1:2005.

X	Comb.	Sfruttamento	Classe	NEd	NRd	Rid. NRd da VEd	Mx,Ed	Mx,Rd	Rid. Mx,Rd da VEd	Rid. Mx,Rd da NEd	ρx	ρy	Verifica
107.6	SLV 16	0.037	1	3510.5	101662.9	1	-1561	642783	1		0	0	Si

Verifica a presso/tenso flessione retta X SLD §§ 4.2.4.1.2.3 - 4.2.4.1.2.6 - 4.2.4.1.2.7 - 4.2.4.1.2.8 NTC18

Verifiche eseguite utilizzando la formula conservativa (6.2) §6.2.1 EN 1993-1-1:2005.

X	Comb.	Sfruttamento	Classe	NEd	NRd	Rid. NRd da VEd	Mx,Ed	Mx,Rd	Rid. Mx,Rd da VEd	Rid. Mx,Rd da NEd	ρx	ρy	Verifica
107.6	SLD 15	0.02	1	1776.8	101662.9	1	-1561	642783	1		0	0	Si

Verifiche ad instabilità

Caratteristiche iniziali

Membratura principale per controllo snellezza; Calcolo di snellezze ed N critici condotti secondo gli assi principali;
Curva X: b; Curva Y: c; Svergolamento: Carico all'estradosso; Curva svergolamento: b;

Dati per instabilità attorno a x

Numero rit.	Presente	Ascissa	Campata	βx/m	Vincolo a entrambi estremi	λx/m	λVer
1	Si	0					
			1-2	1	Si	32.8	Si, (<200)
2	Si	215.2					

Dati per instabilità attorno a y

Numero rit.	Presente	Ascissa	Campata	βy/n	k,LT	kw,LT	Vincolo a entrambi estremi	λy/n	λVer
1	Si	0							
			1-2	1	1	1	Si	54	Si, (<200)
2	Si	215.2							

Verifica a svergolamento SLD §4.2.4.1.3.2 NTC18

X	Comb.	Sfruttamento	Classe	Obblig.	Mx,Ed	Mb,Rd,x	χ,LT	λ adim. LT	L,LT	M,critico	Verifica
164.9	SLD 7	0.002	1	Si	-1117.1	588430.3	0.915	0.604	215.2	1851899.2	Si

Verifica a svergolamento con trazione §4.2.4.1.3.2 NTC18 - §5.5.3 ENV 1993-1-1:1994

X	Comb.	Sfruttamento	Classe	Obblig.	NEd	Mx,Ed	Mx,Eff,Ed	Mb,Rd,x	χ,LT	λ adim. LT	L,LT	M,critico	Verifica
107.6	SLU 68	0	1	Si	483.4	-2029.5	-108.4	588430.3	0.915	0.604	215.2	1851899.2	Si

Verifica di stabilità per pressoflessione §C.4.2.4.1.3.3.2 NTC18

X	Comb.	Sfruttamento	Classe	NEd	NRk	Mx,Ed max	Mx,Rk	My,Ed max	My,Rk	χ,x	χ,y	kxx	kxy	kyx	kyy	χ,LT	Verifica
0	SLV 1	0.038	1	-2782	106746.1	1561.1	674922.6	0	323595.1	0.935	0.772	0.955	0.368	0.997	0.614	0.915	Si

Verifica di stabilità per pressoflessione SLD §C.4.2.4.1.3.3.2 NTC18

X	Comb.	Sfruttamento	Classe	NEd	NRk	Mx,Ed max	Mx,Rk	My,Ed max	My,Rk	χ,x	χ,y	kxx	kxy	kyx	kyy	χ,LT	Verifica
0	SLD 1	0.016	1	-1048.2	106746.1	1561.1	674922.6	0	323595.1	0.935	0.772	0.952	0.363	0.999	0.605	0.915	Si

Verifica di stabilità a taglio anima Y §4.2.4.1.2.4 [4.2.27] NTC18

η	hw	tw	hw/tw max	Verifica
1.2	13.4	0.6	55.46	Si

Verifica di stabilità a taglio anima Y SLD §4.2.4.1.2.4 [4.2.27] NTC18

η	hw	tw	hw/tw max	Verifica
1.2	13.4	0.6	55.46	Si

Verifiche a deformabilità

Mensola X: No; Mensola Y: No.

Frecce lungo X

Ascissa freccia	Combinazione	Freccia	Luce	L/f	L/f,min	Tipo	Verifica
200.8	SLE RA 1	0	215.2	10000	250	Totale	Si
200.8	SLE RA 31	0	215.2	10000	250	Totale	Si
200.8	SLE RA 30	0	215.2	10000	250	Totale	Si
200.8	SLE RA 29	0	215.2	10000	250	Totale	Si
200.8	SLE RA 28	0	215.2	10000	250	Totale	Si
114.7	SLE RA 2	0	215.2	10000	350	Variabile	Si
200.8	SLE RA 31	0	215.2	10000	350	Variabile	Si
200.8	SLE RA 30	0	215.2	10000	350	Variabile	Si
200.8	SLE RA 29	0	215.2	10000	350	Variabile	Si
200.8	SLE RA 28	0	215.2	10000	350	Variabile	Si

Frecce lungo Y

Ascissa freccia	Combinazione	Freccia	Luce	L/f	L/f,min	Tipo	Verifica
107.6	SLE RA 1	-0.002	215.2	10000	250	Totale	Si
107.6	SLE RA 31	-0.002	215.2	10000	250	Totale	Si
107.6	SLE RA 30	-0.002	215.2	10000	250	Totale	Si
107.6	SLE RA 29	-0.002	215.2	10000	250	Totale	Si
107.6	SLE RA 28	-0.002	215.2	10000	250	Totale	Si
186.5	SLE RA 2	0	215.2	10000	350	Variabile	Si
186.5	SLE RA 31	0	215.2	10000	350	Variabile	Si
186.5	SLE RA 30	0	215.2	10000	350	Variabile	Si
186.5	SLE RA 29	0	215.2	10000	350	Variabile	Si
186.5	SLE RA 28	0	215.2	10000	350	Variabile	Si

Superelemento in acciaio composto dall'asta 14

Caratteristiche del materiale

Acciaio: S275, fyk = 2750

Caratteristiche geometriche

Lunghezza: 105.1
Nodo iniziale: 26 Nodo finale: 70
Cerniera iniziale: Svincolo: M2, M3 Cerniera finale: Svincolo: M2, M3
Sovraresistenza: 0% Sisma Z: No

Caratteristiche della sezione

Sezione	Rotazione	Area	Jx	Jy	ix	iy	Wx	Wy	Wplx	Wply
HEA160	0	38.82	1674.7	615.62	6.57	3.98	220.36	76.95	245.43	117.67

Verifiche di resistenza

Verifiche a forza assiale §4.2.4.1.2.1 - §4.2.4.1.2.2 NTC18

X	Comb.	Sfruttamento	Classe	NEd	Nc,Rd	Nt,Rd	Riduzione da taglio	ρx	ρy	Verifica
105.1	SLU 131	0.033		3310.9		101662.9	1	0	0	Si

Verifiche a forza assiale SLD §4.2.4.1.2.1 - §4.2.4.1.2.2 NTC18

X	Comb.	Sfruttamento	Classe	NEd	Nc,Rd	Nt,Rd	Riduzione da taglio	ρx	ρy	Verifica
105.1	SLD 16	0.008		802.9		101662.9	1	0	0	Si

Verifica a taglio Y §4.2.4.1.2.4 NTC18

X	Comb.	Sfruttamento	VEd	Vc,Rd	Av	Interazione taglio-torsione	Riduzione torsione	Verifica
0	SLU 132	0.001	18.3	20036.9	13.26	Considerata	1	Si

Verifica a taglio Y SLD §4.2.4.1.2.4 NTC18

X	Comb.	Sfruttamento	VEd	Vc,Rd	Av	Interazione taglio-torsione	Riduzione torsione	Verifica
105.1	SLD 12	0.001	-14.1	19761.7	13.26	Considerata	0.99	Si

Verifica a torsione §4.2.4.1.2.5 NTC18

X	Comb.	Sfruttamento torsione	TEd	TRd	Riduzione taglio resistente	Sfruttamento taglio-torsione	τEd,totale	τRd	Verifica
101.6	SLV 12	0.092	-1347.4	14685.6	Considerata				Si

Verifica a torsione SLD §4.2.4.1.2.5 NTC18

X	Comb.	Sfruttamento torsione	TEd	TRd	Riduzione taglio resistente	Sfruttamento taglio-torsione	τEd,totale	τRd	Verifica
49.1	SLD 12	0.035	-516.4	14685.6	Considerata				Si

Verifica a presso/tenso flessione retta X §§ 4.2.4.1.2.3 - 4.2.4.1.2.6 - 4.2.4.1.2.7 - 4.2.4.1.2.8 NTC18

Verifiche eseguite utilizzando la formula conservativa (6.2) §6.2.1 EN 1993-1-1:2005.

X	Comb.	Sfruttamento	Classe	NEd	NRd	Rid. NRd da VEd	Mx,Ed	Mx,Rd	Rid. Mx,Rd da VEd	Rid. Mx,Rd da NEd	ρx	ρy	Verifica
56.1	SLU 131	0.033	1	3301.7	101662.9	1	-479	642783	1		0	0	Si

Verifica a presso/tenso flessione retta X SLD §§ 4.2.4.1.2.3 - 4.2.4.1.2.6 - 4.2.4.1.2.7 - 4.2.4.1.2.8 NTC18

Verifiche eseguite utilizzando la formula conservativa (6.2) §6.2.1 EN 1993-1-1:2005.

X	Comb.	Sfruttamento	Classe	NEd	NRd	Rid. NRd da VEd	Mx,Ed	Mx,Rd	Rid. Mx,Rd da VEd	Rid. Mx,Rd da NEd	ρx	ρy	Verifica
56.1	SLD 15	0.008	1	795.7	101662.9	1	-369	642783	1		0	0	Si

Verifiche ad instabilità

Caratteristiche iniziali

Membratura principale per controllo snellezza; Calcolo di snellezze ed N critici condotti secondo gli assi principali;
Curva X: b; Curva Y: c; Svergolamento: Carico all'estradosso; Curva svergolamento: b;

Dati per instabilità attorno a x

Numero rit.	Presente	Ascissa	Campata	βx/m	Vincolo a entrambi estremi	λx/m	λVer
1	Si	0					
			1-2	1	Si	16	Si, (<200)
2	Si	105.1					

Dati per instabilità attorno a y

Numero rit.	Presente	Ascissa	Campata	βy/n	k,LT	kw,LT	Vincolo a entrambi estremi	λy/n	λVer
1	Si	0							
			1-2	1	1	1	Si	26.4	Si, (<200)
2	Si	105.1							

Verifica di stabilità a taglio anima Y §4.2.4.1.2.4 [4.2.27] NTC18

η	hw	tw	hw/tw max	Verifica
1.2	13.4	0.6	55.46	Si

Verifica di stabilità a taglio anima Y SLD §4.2.4.1.2.4 [4.2.27] NTC18

η	hw	tw	hw/tw max	Verifica
1.2	13.4	0.6	55.46	Si

Verifiche a deformabilità

Mensola X: No; Mensola Y: No.

Frecce lungo X

Ascissa freccia	Combinazione	Freccia	Luce	L/f	L/f,min	Tipo	Verifica
7	SLE RA 1	0	105.1	10000	250	Totale	Si
3.5	SLE RA 31	0	105.1	10000	250	Totale	Si
3.5	SLE RA 30	0	105.1	10000	250	Totale	Si
3.5	SLE RA 29	0	105.1	10000	250	Totale	Si
3.5	SLE RA 28	0	105.1	10000	250	Totale	Si
98.1	SLE RA 2	0	105.1	10000	350	Variabile	Si
7	SLE RA 31	0	105.1	10000	350	Variabile	Si
7	SLE RA 30	0	105.1	10000	350	Variabile	Si
7	SLE RA 29	0	105.1	10000	350	Variabile	Si
7	SLE RA 28	0	105.1	10000	350	Variabile	Si

Frecce lungo Y

Ascissa freccia	Combinazione	Freccia	Luce	L/f	L/f,min	Tipo	Verifica
52.6	SLE RA 1	0	105.1	10000	250	Totale	Si
52.6	SLE RA 31	0	105.1	10000	250	Totale	Si
52.6	SLE RA 30	0	105.1	10000	250	Totale	Si
52.6	SLE RA 29	0	105.1	10000	250	Totale	Si
52.6	SLE RA 28	0	105.1	10000	250	Totale	Si
94.6	SLE RA 2	0	105.1	10000	350	Variabile	Si
3.5	SLE RA 31	0	105.1	10000	350	Variabile	Si
3.5	SLE RA 30	0	105.1	10000	350	Variabile	Si
3.5	SLE RA 29	0	105.1	10000	350	Variabile	Si
3.5	SLE RA 28	0	105.1	10000	350	Variabile	Si

Superelemento in acciaio composto dall'asta 15

Caratteristiche del materiale

Acciaio: S275, fyk = 2750

Caratteristiche geometriche

Lunghezza: 105.1
Nodo iniziale: 25 Nodo finale: 69
Cerniera iniziale: Svincolo: M2, M3 Cerniera finale: Svincolo: M2, M3
Sovraresistenza: 0% Sisma Z: No

Caratteristiche della sezione

Sezione	Rotazione	Area	Jx	Jy	ix	iy	Wx	Wy	Wplx	Wply
HEA160	0	38.82	1674.7	615.62	6.57	3.98	220.36	76.95	245.43	117.67

Verifiche di resistenza

Verifiche a forza assiale §4.2.4.1.2.1 - §4.2.4.1.2.2 NTC18

X	Comb.	Sfruttamento	Classe	NEd	Nc,Rd	Nt,Rd	Riduzione da taglio	ρx	ρy	Verifica
105.1	SLU 131	0.033		3308.1		101662.9	1	0	0	Si

Verifiche a forza assiale SLD §4.2.4.1.2.1 - §4.2.4.1.2.2 NTC18

X	Comb.	Sfruttamento	Classe	NEd	Nc,Rd	Nt,Rd	Riduzione da taglio	ρx	ρy	Verifica
105.1	SLD 3	0.008		802.9		101662.9	1	0	0	Si

Verifica a taglio Y §4.2.4.1.2.4 NTC18

X	Comb.	Sfruttamento	VEd	Vc,Rd	Av	Interazione taglio-torsione	Riduzione torsione	Verifica
0	SLU 132	0.001	18.3	20036.9	13.26	Considerata	1	Si

Verifica a taglio Y SLD §4.2.4.1.2.4 NTC18

X	Comb.	Sfruttamento	VEd	Vc,Rd	Av	Interazione taglio-torsione	Riduzione torsione	Verifica
105.1	SLD 8	0.001	-14.1	19761.7	13.26	Considerata	0.99	Si

Verifica a torsione §4.2.4.1.2.5 NTC18

X	Comb.	Sfruttamento torsione	TEd	TRd	Riduzione taglio resistente	Sfruttamento taglio-torsione	τEd,totale	τRd	Verifica
105.1	SLV 8	0.092	1347.4	14685.6	Considerata				Si

Verifica a torsione SLD §4.2.4.1.2.5 NTC18

X	Comb.	Sfruttamento torsione	TEd	TRd	Riduzione taglio resistente	Sfruttamento taglio-torsione	τEd,totale	τRd	Verifica
105.1	SLD 8	0.035	516.4	14685.6	Considerata				Si

Verifica a presso/tenso flessione retta X §§ 4.2.4.1.2.3 - 4.2.4.1.2.6 - 4.2.4.1.2.7 - 4.2.4.1.2.8 NTC18

Verifiche eseguite utilizzando la formula conservativa (6.2) §6.2.1 EN 1993-1-1:2005.

X	Comb.	Sfruttamento	Classe	NEd	NRd	Rid. NRd da VEd	Mx,Ed	Mx,Rd	Rid. Mx,Rd da VEd	Rid. Mx,Rd da NEd	ρx	ρy	Verifica
56.1	SLU 98	0.033	1	3298.9	101662.9	1	-479	642783	1		0	0	Si

Verifica a presso/tenso flessione retta X SLD §§ 4.2.4.1.2.3 - 4.2.4.1.2.6 - 4.2.4.1.2.7 - 4.2.4.1.2.8 NTC18

Verifiche eseguite utilizzando la formula conservativa (6.2) §6.2.1 EN 1993-1-1:2005.

X	Comb.	Sfruttamento	Classe	NEd	NRd	Rid. NRd da VEd	Mx,Ed	Mx,Rd	Rid. Mx,Rd da VEd	Rid. Mx,Rd da NEd	ρx	ρy	Verifica
56.1	SLD 3	0.008	1	795.7	101662.9	1	-369	642783	1		0	0	Si

Verifiche ad instabilità

Caratteristiche iniziali

Membratura principale per controllo snellezza; Calcolo di snellezze ed N critici condotti secondo gli assi principali;
Curva X: b; Curva Y: c; Svergolamento: Carico all'estradosso; Curva svergolamento: b;

Dati per instabilità attorno a x

Numero rit.	Presente	Ascissa	Campata	βx/m	Vincolo a entrambi estremi	λx/m	λVer
1	Si	0					
			1-2	1	Si	16	Si, (<200)
2	Si	105.1					

Dati per instabilità attorno a y

Numero rit.	Presente	Ascissa	Campata	βy/n	k,LT	kw,LT	Vincolo a entrambi estremi	λy/n	λVer
1	Si	0							
			1-2	1	1	1	Si	26.4	Si, (<200)
2	Si	105.1							

Verifica di stabilità a taglio anima Y §4.2.4.1.2.4 [4.2.27] NTC18

η	hw	tw	hw/tw max	Verifica
1.2	13.4	0.6	55.46	Si

Verifica di stabilità a taglio anima Y SLD §4.2.4.1.2.4 [4.2.27] NTC18

η	hw	tw	hw/tw max	Verifica
1.2	13.4	0.6	55.46	Si

Verifiche a deformabilità

Mensola X: No; Mensola Y: No.

Frecce lungo X

Ascissa freccia	Combinazione	Freccia	Luce	L/f	L/f,min	Tipo	Verifica
7	SLE RA 1	0	105.1	10000	250	Totale	Si

Ascissa freccia	Combinazione	Freccia	Luce	L/f	L/f,min	Tipo	Verifica
7	SLE RA 31	0	105.1	10000	250	Totale	Si
7	SLE RA 30	0	105.1	10000	250	Totale	Si
7	SLE RA 29	0	105.1	10000	250	Totale	Si
7	SLE RA 28	0	105.1	10000	250	Totale	Si
98.1	SLE RA 2	0	105.1	10000	350	Variabile	Si
38.6	SLE RA 31	0	105.1	10000	350	Variabile	Si
38.6	SLE RA 30	0	105.1	10000	350	Variabile	Si
38.6	SLE RA 29	0	105.1	10000	350	Variabile	Si
38.6	SLE RA 28	0	105.1	10000	350	Variabile	Si

Frecce lungo Y

Ascissa freccia	Combinazione	Freccia	Luce	L/f	L/f,min	Tipo	Verifica
52.6	SLE RA 1	0	105.1	10000	250	Totale	Si
52.6	SLE RA 31	0	105.1	10000	250	Totale	Si
52.6	SLE RA 30	0	105.1	10000	250	Totale	Si
52.6	SLE RA 29	0	105.1	10000	250	Totale	Si
52.6	SLE RA 28	0	105.1	10000	250	Totale	Si
94.6	SLE RA 2	0	105.1	10000	350	Variabile	Si
31.5	SLE RA 31	0	105.1	10000	350	Variabile	Si
31.5	SLE RA 30	0	105.1	10000	350	Variabile	Si
31.5	SLE RA 29	0	105.1	10000	350	Variabile	Si
31.5	SLE RA 28	0	105.1	10000	350	Variabile	Si

Superelemento in acciaio composto dall'asta 16

Caratteristiche del materiale

Acciaio: S275, fyk = 2750

Caratteristiche geometriche

Lunghezza: 108.7
Nodo iniziale: 6 Nodo finale: 33
Cerniera iniziale: No Cerniera finale: No
Sovraresistenza: 0% Sisma Z: No

Caratteristiche della sezione

Sezione	Rotazione	Area	Jx	Jy	ix	iy	Wx	Wy	Wplx	Wply
HEA180	0	45.3	2512.55	924.65	7.45	4.52	293.87	102.74	325.17	156.53

Verifiche di resistenza

Verifiche a forza assiale §4.2.4.1.2.1 - §4.2.4.1.2.2 NTC18

X	Comb.	Sfruttamento	Classe	NEd	Nc,Rd	Nt,Rd	Riduzione da taglio	ρx	ρy	Verifica
0	SLU 130	0.272	1	-32272.7	118634.3		1	0	0	Si

Verifiche a forza assiale SLD §4.2.4.1.2.1 - §4.2.4.1.2.2 NTC18

X	Comb.	Sfruttamento	Classe	NEd	Nc,Rd	Nt,Rd	Riduzione da taglio	ρx	ρy	Verifica
0	SLD 14	0.147	1	-17487.5	118634.3		1	0	0	Si

Verifica a taglio X §4.2.4.1.2.4 NTC18

X	Comb.	Sfruttamento	VEd	Vc,Rd	Av	Interazione taglio-torsione	Riduzione torsione	Verifica
108.7	SLV 8	0.002	-119.6	54131.6	36.18	Considerata	0.99	Si

Verifica a taglio X SLD §4.2.4.1.2.4 NTC18

X	Comb.	Sfruttamento	VEd	Vc,Rd	Av	Interazione taglio-torsione	Riduzione torsione	Verifica
108.7	SLD 8	0.001	-45.4	54489.8	36.18	Considerata	1	Si

Verifica a taglio Y §4.2.4.1.2.4 NTC18

X	Comb.	Sfruttamento	VEd	Vc,Rd	Av	Interazione taglio-torsione	Riduzione torsione	Verifica
108.7	SLU 130	0.092	-2014.7	21950.9	14.52	Considerata	1	Si

Verifica a taglio Y SLD §4.2.4.1.2.4 NTC18

X	Comb.	Sfruttamento	VEd	Vc,Rd	Av	Interazione taglio-torsione	Riduzione torsione	Verifica
108.7	SLD 2	0.071	-1556.8	21919.1	14.52	Considerata	1	Si

Verifica a torsione §4.2.4.1.2.5 NTC18

X	Comb.	Sfruttamento torsione	TEd	TRd	Riduzione taglio resistente	Sfruttamento taglio-torsione	τEd,totale	τRd	Verifica
0	SLV 5	0.027	-487.5	18118.1	Considerata				Si

Verifica a torsione SLD §4.2.4.1.2.5 NTC18

X	Comb.	Sfruttamento torsione	TEd	TRd	Riduzione taglio resistente	Sfruttamento taglio-torsione	τEd,totale	τRd	Verifica
58	SLD 5	0.01	-187	18118.1	Considerata				Si

Verifica a presso/tenso flessione retta X §§ 4.2.4.1.2.3 - 4.2.4.1.2.6 - 4.2.4.1.2.7 - 4.2.4.1.2.8 NTC18

Verifiche eseguite utilizzando la formula conservativa (6.2) §6.2.1 EN 1993-1-1:2005.

X	Comb.	Sfruttamento	Classe	NEd	NRd	Rid. NRd da VEd	Mx,Ed	Mx,Rd	Rid. Mx,Rd da VEd	Rid. Mx,Rd da NEd	ρx	ρy	Verifica
25.4	SLU 130	0.282	1	-30510.8	118634.3	1	-20796	851642	1		0	0	Si

Verifica a presso/tenso flessione retta X SLD §§ 4.2.4.1.2.3 - 4.2.4.1.2.6 - 4.2.4.1.2.7 - 4.2.4.1.2.8 NTC18

Verifiche eseguite utilizzando la formula conservativa (6.2) §6.2.1 EN 1993-1-1:2005.

X	Comb.	Sfruttamento	Classe	NEd	NRd	Rid. NRd da VEd	Mx,Ed	Mx,Rd	Rid. Mx,Rd da VEd	Rid. Mx,Rd da NEd	ρx	ρy	Verifica
10.9	SLD 14	0.154	1	-16906.7	118634.3	1	-9789	851642	1		0	0	Si

Verifica a presso/tenso flessione retta Y §§ 4.2.4.1.2.3 - 4.2.4.1.2.6 - 4.2.4.1.2.7 - 4.2.4.1.2.8 NTC18

Verifiche eseguite utilizzando la formula conservativa (6.2) §6.2.1 EN 1993-1-1:2005.

X	Comb.	Sfruttamento	Classe	NEd	NRd	Rid. NRd da VEd	My,Ed	My,Rd	Rid. My,Rd da VEd	Rid. My,Rd da NEd	ρx	ρy	Verifica
0	SLV 9	0.148	1	-17467.3	118634.3	1	-472	409967	1		0	0	Si

Verifica a presso/tenso flessione retta Y SLD §§ 4.2.4.1.2.3 - 4.2.4.1.2.6 - 4.2.4.1.2.7 - 4.2.4.1.2.8 NTC18

Verifiche eseguite utilizzando la formula conservativa (6.2) §6.2.1 EN 1993-1-1:2005.

X	Comb.	Sfruttamento	Classe	NEd	NRd	Rid. NRd da VEd	My,Ed	My,Rd	Rid. My,Rd da VEd	Rid. My,Rd da NEd	ρx	ρy	Verifica
0	SLD 11	0.147	1	-17445.3	118634.3	1	179	409967	1		0	0	Si

Verifica a presso/tenso flessione deviata §§ 4.2.4.1.2.3 - 4.2.4.1.2.6 - 4.2.4.1.2.7 - 4.2.4.1.2.8 NTC18

Verifiche eseguite utilizzando la formula conservativa (6.2) §6.2.1 EN 1993-1-1:2005.

X	Comb.	Sfruttamento	Classe	NEd	NRd	Rid. NRd da VEd	Mx,Ed	Mx,Rd	My,Ed	My,Rd	Rid. Mx,Rd da VEd	Rid. Mx,Rd da NEd	Rid. My,Rd da VEd	Rid. My,Rd da NEd	α	β	ρx	ρy	Verifica
108.7	SLV 8	0.167	1	-11578.5	118634.3	1	32971	851642	-12520	409967	1		1				0	0	Si

Verifica a presso/tenso flessione deviata SLD §§ 4.2.4.1.2.3 - 4.2.4.1.2.6 - 4.2.4.1.2.7 - 4.2.4.1.2.8 NTC18

Verifiche eseguite utilizzando la formula conservativa (6.2) §6.2.1 EN 1993-1-1:2005.

X	Comb.	Sfruttamento	Classe	NEd	NRd	Rid. NRd da VEd	Mx,Ed	Mx,Rd	My,Ed	My,Rd	Rid. Mx,Rd da VEd	Rid. Mx,Rd da NEd	Rid. My,Rd da VEd	Rid. My,Rd da NEd	α	β	ρx	ρy	Verifica
29	SLD 12	0.159	1	-15896.3	118634.3	1	-19039	851642	-1134	409967	1		1				0	0	Si

Verifiche ad instabilità

Caratteristiche iniziali

Membratura principale per controllo snellezza; Calcolo di snellezze ed N critici condotti secondo gli assi principali;
Curva X: b; Curva Y: c; Svergolamento: Carico all'estradosso; Curva svergolamento: b;

Dati per instabilità attorno a x

Numero rit.	Presente	Ascissa	Campata	βx/m	Vincolo a entrambi estremi	λx/m	λVer
1	Si	0					
			1-2	1	Si	14.6	Si, (<200)
2	Si	108.7					

Dati per instabilità attorno a y

Numero rit.	Presente	Ascissa	Campata	βy/n	k,LT	kw,LT	Vincolo a entrambi estremi	λy/n	λVer
1	Si	0							
			1-2	1	1	1	Si	24	Si, (<200)
2	Si	108.7							

Verifica di stabilità per pressoflessione §C.4.2.4.1.3.3.2 NTC18

X	Comb.	Sfruttamento	Classe	NEd	NRk	Mx,Ed max	Mx,Rk	My,Ed max	My,Rk	χ,x	χ,y	kxx	kxy	kyx	kyy	χ,LT	Verifica
0	SLU 98	0.329	1	-32272.6	124566	44560	894223.7	19.9	430465.2	1	0.961	0.478	0.329	0.877	0.549	1	Si

Verifica di stabilità per pressoflessione SLD §C.4.2.4.1.3.3.2 NTC18

X	Comb.	Sfruttamento	Classe	NEd	NRk	Mx,Ed max	Mx,Rk	My,Ed max	My,Rk	χ,x	χ,y	kxx	kxy	kyx	kyy	χ,LT	Verifica
0	SLD 7	0.191	1	-17409.1	124566	30662.5	894223.7	4752	430465.2	1	0.961	0.572	0.348	0.877	0.581	1	Si

Verifica di stabilità a taglio anima Y §4.2.4.1.2.4 [4.2.27] NTC18

η	hw	tw	hw/tw max	Verifica
1.2	15.2	0.6	55.46	Si

Verifica di stabilità a taglio anima Y SLD §4.2.4.1.2.4 [4.2.27] NTC18

η	hw	tw	hw/tw max	Verifica
1.2	15.2	0.6	55.46	Si

Verifiche a deformabilità

Mensola X: No; Mensola Y: No.

Frecce lungo X

Ascissa freccia	Combinazione	Freccia	Luce	L/f	L/f,min	Tipo	Verifica
65.2	SLE RA 1	0	108.7	10000	250	Totale	Si
68.8	SLE RA 31	0	108.7	10000	250	Totale	Si
65.2	SLE RA 30	0	108.7	10000	250	Totale	Si
68.8	SLE RA 29	0	108.7	10000	250	Totale	Si
65.2	SLE RA 28	0	108.7	10000	250	Totale	Si
61.6	SLE RA 2	0	108.7	10000	350	Variabile	Si
58	SLE RA 31	0	108.7	10000	350	Variabile	Si
65.2	SLE RA 30	0	108.7	10000	350	Variabile	Si
58	SLE RA 29	0	108.7	10000	350	Variabile	Si
65.2	SLE RA 28	0	108.7	10000	350	Variabile	Si

Frecce lungo Y

Ascissa freccia	Combinazione	Freccia	Luce	L/f	L/f,min	Tipo	Verifica
50.7	SLE RA 1	-0.008	108.7	10000	250	Totale	Si

Ascissa freccia	Combinazione	Freccia	Luce	L/f	L/f,min	Tipo	Verifica
50.7	SLE RA 31	-0.007	108.7	10000	250	Totale	Si
50.7	SLE RA 30	-0.007	108.7	10000	250	Totale	Si
50.7	SLE RA 29	-0.008	108.7	10000	250	Totale	Si
50.7	SLE RA 28	-0.008	108.7	10000	250	Totale	Si
54.3	SLE RA 2	0	108.7	10000	350	Variabile	Si
61.6	SLE RA 31	0.001	108.7	10000	350	Variabile	Si
61.6	SLE RA 30	0.001	108.7	10000	350	Variabile	Si
61.6	SLE RA 29	0.001	108.7	10000	350	Variabile	Si
61.6	SLE RA 28	0.001	108.7	10000	350	Variabile	Si

Superelemento in acciaio composto dall'asta 17

Caratteristiche del materiale

Acciaio: S275, fyk = 2750

Caratteristiche geometriche

Lunghezza: 108.7
Nodo iniziale: 7 Nodo finale: 36
Cerniera iniziale: No Cerniera finale: No
Sovraresistenza: 0% Sisma Z: No

Caratteristiche della sezione

Sezione	Rotazione	Area	Jx	Jy	ix	iy	Wx	Wy	Wplx	Wply
HEA180	0	45.3	2512.55	924.65	7.45	4.52	293.87	102.74	325.17	156.53

Verifiche di resistenza

Verifiche a forza assiale §4.2.4.1.2.1 - §4.2.4.1.2.2 NTC18

X	Comb.	Sfruttamento	Classe	NEd	Nc,Rd	Nt,Rd	Riduzione da taglio	ρx	ρy	Verifica
0	SLU 97	0.272	1	-32248.4	118634.3		1	0	0	Si

Verifiche a forza assiale SLD §4.2.4.1.2.1 - §4.2.4.1.2.2 NTC18

X	Comb.	Sfruttamento	Classe	NEd	Nc,Rd	Nt,Rd	Riduzione da taglio	ρx	ρy	Verifica
0	SLD 1	0.147	1	-17487.5	118634.3		1	0	0	Si

Verifica a taglio X §4.2.4.1.2.4 NTC18

X	Comb.	Sfruttamento	VEd	Vc,Rd	Av	Interazione taglio-torsione	Riduzione torsione	Verifica
108.7	SLV 12	0.002	119.6	54131.6	36.18	Considerata	0.99	Si

Verifica a taglio X SLD §4.2.4.1.2.4 NTC18

X	Comb.	Sfruttamento	VEd	Vc,Rd	Av	Interazione taglio-torsione	Riduzione torsione	Verifica
108.7	SLD 12	0.001	45.4	54489.8	36.18	Considerata	1	Si

Verifica a taglio Y §4.2.4.1.2.4 NTC18

X	Comb.	Sfruttamento	VEd	Vc,Rd	Av	Interazione taglio-torsione	Riduzione torsione	Verifica
108.7	SLU 97	0.092	-2015.4	21950.9	14.52	Considerata	1	Si

Verifica a taglio Y SLD §4.2.4.1.2.4 NTC18

X	Comb.	Sfruttamento	VEd	Vc,Rd	Av	Interazione taglio-torsione	Riduzione torsione	Verifica
108.7	SLD 14	0.071	-1556.8	21919.1	14.52	Considerata	1	Si

Verifica a torsione §4.2.4.1.2.5 NTC18

X	Comb.	Sfruttamento torsione	TEd	TRd	Riduzione taglio resistente	Sfruttamento taglio-torsione	τEd,totale	τRd	Verifica
58	SLV 9	0.027	487.5	18118.1	Considerata				Si

Verifica a torsione SLD §4.2.4.1.2.5 NTC18

X	Comb.	Sfruttamento torsione	TEd	TRd	Riduzione taglio resistente	Sfruttamento taglio-torsione	τEd,totale	τRd	Verifica
7.2	SLD 9	0.01	187	18118.1	Considerata				Si

Verifica a presso/tenso flessione retta X §§ 4.2.4.1.2.3 - 4.2.4.1.2.6 - 4.2.4.1.2.7 - 4.2.4.1.2.8 NTC18

Verifiche eseguite utilizzando la formula conservativa (6.2) §6.2.1 EN 1993-1-1:2005.

X	Comb.	Sfruttamento	Classe	NEd	NRd	Rid. NRd da VEd	Mx,Ed	Mx,Rd	Rid. Mx,Rd da VEd	Rid. Mx,Rd da NEd	ρx	ρy	Verifica
21.7	SLU 130	0.281	1	-30738.2	118634.3	1	-18975	851642	1		0	0	Si

Verifica a presso/tenso flessione retta X SLD §§ 4.2.4.1.2.3 - 4.2.4.1.2.6 - 4.2.4.1.2.7 - 4.2.4.1.2.8 NTC18

Verifiche eseguite utilizzando la formula conservativa (6.2) §6.2.1 EN 1993-1-1:2005.

X	Comb.	Sfruttamento	Classe	NEd	NRd	Rid. NRd da VEd	Mx,Ed	Mx,Rd	Rid. Mx,Rd da VEd	Rid. Mx,Rd da NEd	ρx	ρy	Verifica
10.9	SLD 1	0.154	1	-16906.7	118634.3	1	-9789	851642	1		0	0	Si

Verifica a presso/tenso flessione retta Y §§ 4.2.4.1.2.3 - 4.2.4.1.2.6 - 4.2.4.1.2.7 - 4.2.4.1.2.8 NTC18

Verifiche eseguite utilizzando la formula conservativa (6.2) §6.2.1 EN 1993-1-1:2005.

X	Comb.	Sfruttamento	Classe	NEd	NRd	Rid. NRd da VEd	My,Ed	My,Rd	Rid. My,Rd da VEd	Rid. My,Rd da NEd	ρx	ρy	Verifica
0	SLV 5	0.148	1	-17467.3	118634.3	1	472	409967	1		0	0	Si

Verifica a presso/tenso flessione retta Y SLD §§ 4.2.4.1.2.3 - 4.2.4.1.2.6 - 4.2.4.1.2.7 - 4.2.4.1.2.8 NTC18

Verifiche eseguite utilizzando la formula conservativa (6.2) §6.2.1 EN 1993-1-1:2005.

X	Comb.	Sfruttamento	Classe	NEd	NRd	Rid. NRd da VEd	My,Ed	My,Rd	Rid. My,Rd da VEd	Rid. My,Rd da NEd	ρx	ρy	Verifica
0	SLD 7	0.147	1	-17445.3	118634.3	1	-179	409967	1		0	0	Si

Verifica a presso/tenso flessione deviata §§ 4.2.4.1.2.3 - 4.2.4.1.2.6 - 4.2.4.1.2.7 - 4.2.4.1.2.8 NTC18

Verifiche eseguite utilizzando la formula conservativa (6.2) §6.2.1 EN 1993-1-1:2005.

X	Comb.	Sfruttamento	Classe	NEd	NRd	Rid. NRd da VEd	Mx,Ed	Mx,Rd	My,Ed	My,Rd	Rid. Mx,Rd da VEd	Rid. Mx,Rd da NEd	Rid. My,Rd da VEd	Rid. My,Rd da NEd	α	β	ρx	ρy	Verifica
108.7	SLV 11	0.167	1	-11578.5	118634.3	1	32971	851642	12520	409967	1		1				0	0	Si

Verifica a presso/tenso flessione deviata SLD §§ 4.2.4.1.2.3 - 4.2.4.1.2.6 - 4.2.4.1.2.7 - 4.2.4.1.2.8 NTC18

Verifiche eseguite utilizzando la formula conservativa (6.2) §6.2.1 EN 1993-1-1:2005.

X	Comb.	Sfruttamento	Classe	NEd	NRd	Rid. NRd da VEd	Mx,Ed	Mx,Rd	My,Ed	My,Rd	Rid. Mx,Rd da VEd	Rid. Mx,Rd da NEd	Rid. My,Rd da VEd	Rid. My,Rd da NEd	α	β	ρx	ρy	Verifica
29	SLD 7	0.159	1	-15896.3	118634.3	1	-19039	851642	1134	409967	1		1				0	0	Si

Verifiche ad instabilità

Caratteristiche iniziali

Membratura principale per controllo snellezza; Calcolo di snellezze ed N critici condotti secondo gli assi principali;
Curva X: b; Curva Y: c; Svergolamento: Carico all'estradosso; Curva svergolamento: b;

Dati per instabilità attorno a x

Numero rit.	Presente	Ascissa	Campata	βx/m	Vincolo a entrambi estremi	λx/m	λVer
1	Si	0					
			1-2	1	Si	14.6	Si, (<200)
2	Si	108.7					

Dati per instabilità attorno a y

Numero rit.	Presente	Ascissa	Campata	βy/n	k,LT	kw,LT	Vincolo a entrambi estremi	λy/n	λVer
1	Si	0							
			1-2	1	1	1	Si	24	Si, (<200)
2	Si	108.7							

Verifica di stabilità per pressoflessione §C.4.2.4.1.3.3.2 NTC18

X	Comb.	Sfruttamento	Classe	NEd	NRk	Mx,Ed max	Mx,Rk	My,Ed max	My,Rk	χ,x	χ,y	kxx	kxy	kyx	kyy	χ,LT	Verifica
0	SLU 98	0.329	1	-32248.3	124566	44629.8	894223.7	20	430465.2	1	0.961	0.477	0.329	0.877	0.549	1	Si

Verifica di stabilità per pressoflessione SLD §C.4.2.4.1.3.3.2 NTC18

X	Comb.	Sfruttamento	Classe	NEd	NRk	Mx,Ed max	Mx,Rk	My,Ed max	My,Rk	χ,x	χ,y	kxx	kxy	kyx	kyy	χ,LT	Verifica
0	SLD 12	0.191	1	-17409.1	124566	30662.5	894223.7	4752	430465.2	1	0.961	0.572	0.348	0.877	0.581	1	Si

Verifica di stabilità a taglio anima Y §4.2.4.1.2.4 [4.2.27] NTC18

η	hw	tw	hw/tw max	Verifica
1.2	15.2	0.6	55.46	Si

Verifica di stabilità a taglio anima Y SLD §4.2.4.1.2.4 [4.2.27] NTC18

η	hw	tw	hw/tw max	Verifica
1.2	15.2	0.6	55.46	Si

Verifiche a deformabilità

Mensola X: No; Mensola Y: No.

Frecce lungo X

Ascissa freccia	Combinazione	Freccia	Luce	L/f	L/f,min	Tipo	Verifica
65.2	SLE RA 1	0	108.7	10000	250	Totale	Si
68.8	SLE RA 31	0	108.7	10000	250	Totale	Si
65.2	SLE RA 30	0	108.7	10000	250	Totale	Si
68.8	SLE RA 29	0	108.7	10000	250	Totale	Si
65.2	SLE RA 28	0	108.7	10000	250	Totale	Si
61.6	SLE RA 2	0	108.7	10000	350	Variabile	Si
58	SLE RA 31	0	108.7	10000	350	Variabile	Si
65.2	SLE RA 30	0	108.7	10000	350	Variabile	Si
58	SLE RA 29	0	108.7	10000	350	Variabile	Si
65.2	SLE RA 28	0	108.7	10000	350	Variabile	Si

Frecce lungo Y

Ascissa freccia	Combinazione	Freccia	Luce	L/f	L/f,min	Tipo	Verifica
50.7	SLE RA 1	-0.008	108.7	10000	250	Totale	Si
50.7	SLE RA 31	-0.007	108.7	10000	250	Totale	Si
50.7	SLE RA 30	-0.007	108.7	10000	250	Totale	Si
50.7	SLE RA 29	-0.008	108.7	10000	250	Totale	Si
50.7	SLE RA 28	-0.008	108.7	10000	250	Totale	Si
54.3	SLE RA 2	0	108.7	10000	350	Variabile	Si
61.6	SLE RA 31	0.001	108.7	10000	350	Variabile	Si
61.6	SLE RA 30	0.001	108.7	10000	350	Variabile	Si
61.6	SLE RA 29	0.001	108.7	10000	350	Variabile	Si
61.6	SLE RA 28	0.001	108.7	10000	350	Variabile	Si

Superelemento in acciaio composto dall'asta 18

Caratteristiche del materiale

Acciaio: S275, fyk = 2750

Caratteristiche geometriche

Lunghezza: 74.7
Nodo iniziale: 33 Nodo finale: 73
Cerniera iniziale: No Cerniera finale: No
Sovraresistenza: 0% Sisma Z: No

Caratteristiche della sezione

Sezione	Rotazione	Area	Jx	Jy	ix	iy	Wx	Wy	Wplx	Wply
HEA180	0	45.3	2512.55	924.65	7.45	4.52	293.87	102.74	325.17	156.53

Verifiche di resistenza

Verifiche a forza assiale §4.2.4.1.2.1 - §4.2.4.1.2.2 NTC18

X	Comb.	Sfruttamento	Classe	NEd	Nc,Rd	Nt,Rd	Riduzione da taglio	ρx	ρy	Verifica
0	SLU 130	0.329	1	-39043.4	118634.3		1	0	0	Si

Verifiche a forza assiale SLD §4.2.4.1.2.1 - §4.2.4.1.2.2 NTC18

X	Comb.	Sfruttamento	Classe	NEd	Nc,Rd	Nt,Rd	Riduzione da taglio	ρx	ρy	Verifica
0	SLD 3	0.156	1	-18477.9	118634.3		1	0	0	Si

Verifica a taglio X §4.2.4.1.2.4 NTC18

X	Comb.	Sfruttamento	VEd	Vc,Rd	Av	Interazione taglio-torsione	Riduzione torsione	Verifica
74.7	SLV 8	0.004	200.5	49149.3	36.18	Considerata	0.9	Si

Verifica a taglio X SLD §4.2.4.1.2.4 NTC18

X	Comb.	Sfruttamento	VEd	Vc,Rd	Av	Interazione taglio-torsione	Riduzione torsione	Verifica
74.7	SLD 8	0.001	76.3	52662.2	36.18	Considerata	0.96	Si

Verifica a taglio Y §4.2.4.1.2.4 NTC18

X	Comb.	Sfruttamento	VEd	Vc,Rd	Av	Interazione taglio-torsione	Riduzione torsione	Verifica
74.7	SLU 130	0.256	-5623.1	21950.9	14.52	Considerata	1	Si

Verifica a taglio Y SLD §4.2.4.1.2.4 NTC18

X	Comb.	Sfruttamento	VEd	Vc,Rd	Av	Interazione taglio-torsione	Riduzione torsione	Verifica
74.7	SLD 4	0.15	-3251	21706.6	14.52	Considerata	0.99	Si

Verifica a torsione §4.2.4.1.2.5 NTC18

X	Comb.	Sfruttamento torsione	TEd	TRd	Riduzione taglio resistente	Sfruttamento taglio-torsione	τEd,totale	τRd	Verifica
34.9	SLV 12	0.241	-4365.3	18118.1	Considerata				Si

Verifica a torsione SLD §4.2.4.1.2.5 NTC18

X	Comb.	Sfruttamento torsione	TEd	TRd	Riduzione taglio resistente	Sfruttamento taglio-torsione	τEd,totale	τRd	Verifica
34.9	SLD 12	0.092	-1658.4	18118.1	Considerata				Si

Verifica a presso/tenso flessione retta X §§ 4.2.4.1.2.3 - 4.2.4.1.2.6 - 4.2.4.1.2.7 - 4.2.4.1.2.8 NTC18

Verifiche eseguite utilizzando la formula conservativa (6.2) §6.2.1 EN 1993-1-1:2005.

X	Comb.	Sfruttamento	Classe	NEd	NRd	Rid. NRd da VEd	Mx,Ed	Mx,Rd	Rid. Mx,Rd da VEd	Rid. Mx,Rd da NEd	ρx	ρy	Verifica
74.7	SLU 132	0.659	1	-35267.8	118634.3	1	308053	851642	1		0	0	Si

Verifica a presso/tenso flessione retta X SLD §§ 4.2.4.1.2.3 - 4.2.4.1.2.6 - 4.2.4.1.2.7 - 4.2.4.1.2.8 NTC18

Verifiche eseguite utilizzando la formula conservativa (6.2) §6.2.1 EN 1993-1-1:2005.

X	Comb.	Sfruttamento	Classe	NEd	NRd	Rid. NRd da VEd	Mx,Ed	Mx,Rd	Rid. Mx,Rd da VEd	Rid. Mx,Rd da NEd	ρx	ρy	Verifica
59.8	SLD 1	0.27	1	-16154.4	118634.3	1	113627	851642	1		0	0	Si

Verifica a presso/tenso flessione retta Y §§ 4.2.4.1.2.3 - 4.2.4.1.2.6 - 4.2.4.1.2.7 - 4.2.4.1.2.8 NTC18

Verifiche eseguite utilizzando la formula conservativa (6.2) §6.2.1 EN 1993-1-1:2005.

X	Comb.	Sfruttamento	Classe	NEd	NRd	Rid. NRd da VEd	My,Ed	My,Rd	Rid. My,Rd da VEd	Rid. My,Rd da NEd	ρx	ρy	Verifica
19.9	SLV 13	0.132	1	-15048.9	118634.3	1	2191	409967	1		0	0	Si

Verifica a presso/tenso flessione deviata §§ 4.2.4.1.2.3 - 4.2.4.1.2.6 - 4.2.4.1.2.7 - 4.2.4.1.2.8 NTC18

Verifiche eseguite utilizzando la formula conservativa (6.2) §6.2.1 EN 1993-1-1:2005.

X	Comb.	Sfruttamento	Classe	NEd	NRd	Rid. NRd da VEd	Mx,Ed	Mx,Rd	My,Ed	My,Rd	Rid. Mx,Rd da VEd	Rid. Mx,Rd da NEd	Rid. My,Rd da VEd	Rid. My,Rd da NEd	α	β	ρx	ρy	Verifica
74.7	SLV 4	0.376	1	-16586.3	118634.3	1	199080	851642	1137	409967	1		1				0	0	Si

Verifica a presso/tenso flessione deviata SLD §§ 4.2.4.1.2.3 - 4.2.4.1.2.6 - 4.2.4.1.2.7 - 4.2.4.1.2.8 NTC18

Verifiche eseguite utilizzando la formula conservativa (6.2) §6.2.1 EN 1993-1-1:2005.

X	Comb.	Sfruttamento	Classe	NEd	NRd	Rid. NRd da VEd	Mx,Ed	Mx,Rd	My,Ed	My,Rd	Rid. Mx,Rd da VEd	Rid. Mx,Rd da NEd	Rid. My,Rd da VEd	Rid. My,Rd da NEd	α	β	ρx	ρy	Verifica
74.7	SLD 3	0.317	1	-15573.6	118634.3	1	157380	851642	445	409967	1		1				0	0	Si

Verifiche ad instabilità

Caratteristiche iniziali

Membratura principale per controllo snellezza; Calcolo di snellezze ed N critici condotti secondo gli assi principali;
Curva X: b; Curva Y: c; Svergolamento: Carico all'estradosso; Curva svergolamento: b;

Dati per instabilità attorno a x

Numero rit.	Presente	Ascissa	Campata	βx/m	Vincolo a entrambi estremi	λx/m	λVer
1	Si	0					
			1-2	1	Si	10	Si, (<200)
2	Si	74.7					

Dati per instabilità attorno a y

Numero rit.	Presente	Ascissa	Campata	βy/n	k,LT	kw,LT	Vincolo a entrambi estremi	λy/n	λVer
1	Si	0							
			1-2	1	1	1	Si	16.5	Si, (<200)
2	Si	74.7							

Verifica di stabilità per pressoflessione §C.4.2.4.1.3.3.2 NTC18

X	Comb.	Sfruttamento	Classe	NEd	NRk	Mx,Ed max	Mx,Rk	My,Ed max	My,Rk	χ,x	χ,y	kxx	kxy	kyx	kyy	χ,LT	Verifica
0	SLU 99	0.615	1	-39043.4	124566	308052.8	894223.7	35.7	430465.2	1	1	0.541	0.303	0.79	0.506	1	Si

Verifica di stabilità per pressoflessione SLD §C.4.2.4.1.3.3.2 NTC18

X	Comb.	Sfruttamento	Classe	NEd	NRk	Mx,Ed max	Mx,Rk	My,Ed max	My,Rk	χ,x	χ,y	kxx	kxy	kyx	kyy	χ,LT	Verifica
0	SLD 1	0.303	1	-18477.9	124566	157379.9	894223.7	1263.5	430465.2	1	1	0.529	0.275	0.79	0.458	1	Si

Verifica di stabilità a taglio anima Y §4.2.4.1.2.4 [4.2.27] NTC18

η	hw	tw	hw/tw max	Verifica
1.2	15.2	0.6	55.46	Si

Verifica di stabilità a taglio anima Y SLD §4.2.4.1.2.4 [4.2.27] NTC18

η	hw	tw	hw/tw max	Verifica
1.2	15.2	0.6	55.46	Si

Verifiche a deformabilità

Mensola X: No; Mensola Y: No.

Frecce lungo X

Ascissa freccia	Combinazione	Freccia	Luce	L/f	L/f,min	Tipo	Verifica
47.3	SLE RA 1	0	74.7	10000	250	Totale	Si
44.8	SLE RA 31	0	74.7	10000	250	Totale	Si
49.8	SLE RA 30	0	74.7	10000	250	Totale	Si
44.8	SLE RA 29	0	74.7	10000	250	Totale	Si
49.8	SLE RA 28	0	74.7	10000	250	Totale	Si
32.4	SLE RA 2	0	74.7	10000	350	Variabile	Si
39.8	SLE RA 31	0	74.7	10000	350	Variabile	Si
22.4	SLE RA 30	0	74.7	10000	350	Variabile	Si
39.8	SLE RA 29	0	74.7	10000	350	Variabile	Si
24.9	SLE RA 28	0	74.7	10000	350	Variabile	Si

Frecce lungo Y

Ascissa freccia	Combinazione	Freccia	Luce	L/f	L/f,min	Tipo	Verifica
44.8	SLE RA 33	0.01	74.7	7354.8	250	Totale	Si
44.8	SLE RA 31	0.01	74.7	7354.8	250	Totale	Si
44.8	SLE RA 32	0.01	74.7	7355.5	250	Totale	Si
44.8	SLE RA 30	0.01	74.7	7355.5	250	Totale	Si
44.8	SLE RA 29	0.01	74.7	7706.5	250	Totale	Si
42.3	SLE RA 2	0	74.7	10000	350	Variabile	Si
42.3	SLE RA 31	0.007	74.7	10000	350	Variabile	Si
42.3	SLE RA 30	0.007	74.7	10000	350	Variabile	Si
42.3	SLE RA 29	0.006	74.7	10000	350	Variabile	Si
42.3	SLE RA 28	0.006	74.7	10000	350	Variabile	Si

Superelemento in acciaio composto dall'asta 19

Caratteristiche del materiale

Acciaio: S275, fyk = 2750

Caratteristiche geometriche

Lunghezza: 74.7
Nodo iniziale: 36 Nodo finale: 74
Cerniera iniziale: No Cerniera finale: No
Sovraresistenza: 0% Sisma Z: No

Caratteristiche della sezione

Sezione	Rotazione	Area	Jx	Jy	ix	iy	Wx	Wy	Wplx	Wply
HEA180	0	45.3	2512.55	924.65	7.45	4.52	293.87	102.74	325.17	156.53

Verifiche di resistenza

Verifiche a forza assiale §4.2.4.1.2.1 - §4.2.4.1.2.2 NTC18

X	Comb.	Sfruttamento	Classe	NEd	Nc,Rd	Nt,Rd	Riduzione da taglio	ρx	ρy	Verifica
0	SLU 130	0.329	1	-39040	118634.3		1	0	0	Si

Verifiche a forza assiale SLD §4.2.4.1.2.1 - §4.2.4.1.2.2 NTC18

X	Comb.	Sfruttamento	Classe	NEd	Nc,Rd	Nt,Rd	Riduzione da taglio	ρx	ρy	Verifica
0	SLD 15	0.156	1	-18477.9	118634.3		1	0	0	Si

Verifica a taglio X §4.2.4.1.2.4 NTC18

X	Comb.	Sfruttamento	VEd	Vc,Rd	Av	Interazione taglio-torsione	Riduzione torsione	Verifica
34.9	SLV 12	0.004	-200.5	49149.3	36.18	Considerata	0.9	Si

Verifica a taglio X SLD §4.2.4.1.2.4 NTC18

X	Comb.	Sfruttamento	VEd	Vc,Rd	Av	Interazione taglio-torsione	Riduzione torsione	Verifica
74.7	SLD 12	0.001	-76.3	52662.2	36.18	Considerata	0.96	Si

Verifica a taglio Y §4.2.4.1.2.4 NTC18

X	Comb.	Sfruttamento	VEd	Vc,Rd	Av	Interazione taglio-torsione	Riduzione torsione	Verifica
74.7	SLU 130	0.256	-5624.4	21950.9	14.52	Considerata	1	Si

Verifica a taglio Y SLD §4.2.4.1.2.4 NTC18

X	Comb.	Sfruttamento	VEd	Vc,Rd	Av	Interazione taglio-torsione	Riduzione torsione	Verifica
74.7	SLD 16	0.15	-3251	21706.6	14.52	Considerata	0.99	Si

Verifica a torsione §4.2.4.1.2.5 NTC18

X	Comb.	Sfruttamento torsione	TEd	TRd	Riduzione taglio resistente	Sfruttamento taglio-torsione	τEd,totale	τRd	Verifica
74.7	SLV 8	0.241	4365.3	18118.1	Considerata				Si

Verifica a torsione SLD §4.2.4.1.2.5 NTC18

X	Comb.	Sfruttamento torsione	TEd	TRd	Riduzione taglio resistente	Sfruttamento taglio-torsione	τEd,totale	τRd	Verifica
74.7	SLD 8	0.092	1658.4	18118.1	Considerata				Si

Verifica a presso/tenso flessione retta X §§ 4.2.4.1.2.3 - 4.2.4.1.2.6 - 4.2.4.1.2.7 - 4.2.4.1.2.8 NTC18

Verifiche eseguite utilizzando la formula conservativa (6.2) §6.2.1 EN 1993-1-1:2005.

X	Comb.	Sfruttamento	Classe	NEd	NRd	Rid. NRd da VEd	Mx,Ed	Mx,Rd	Rid. Mx,Rd da VEd	Rid. Mx,Rd da NEd	ρx	ρy	Verifica
74.7	SLU 99	0.659	1	-35264.4	118634.3	1	308219	851642	1		0	0	Si

Verifica a presso/tenso flessione retta X SLD §§ 4.2.4.1.2.3 - 4.2.4.1.2.6 - 4.2.4.1.2.7 - 4.2.4.1.2.8 NTC18

Verifiche eseguite utilizzando la formula conservativa (6.2) §6.2.1 EN 1993-1-1:2005.

X	Comb.	Sfruttamento	Classe	NEd	NRd	Rid. NRd da VEd	Mx,Ed	Mx,Rd	Rid. Mx,Rd da VEd	Rid. Mx,Rd da NEd	ρx	ρy	Verifica
59.8	SLD 13	0.27	1	-16154.4	118634.3	1	113627	851642	1		0	0	Si

Verifica a presso/tenso flessione retta Y §§ 4.2.4.1.2.3 - 4.2.4.1.2.6 - 4.2.4.1.2.7 - 4.2.4.1.2.8 NTC18

Verifiche eseguite utilizzando la formula conservativa (6.2) §6.2.1 EN 1993-1-1:2005.

X	Comb.	Sfruttamento	Classe	NEd	NRd	Rid. NRd da VEd	My,Ed	My,Rd	Rid. My,Rd da VEd	Rid. My,Rd da NEd	ρx	ρy	Verifica
19.9	SLV 1	0.132	1	-15048.9	118634.3	1	-2191	409967	1		0	0	Si

Verifica a presso/tenso flessione deviata §§ 4.2.4.1.2.3 - 4.2.4.1.2.6 - 4.2.4.1.2.7 - 4.2.4.1.2.8 NTC18

Verifiche eseguite utilizzando la formula conservativa (6.2) §6.2.1 EN 1993-1-1:2005.

X	Comb.	Sfruttamento	Classe	NEd	NRd	Rid. NRd da VEd	Mx,Ed	Mx,Rd	My,Ed	My,Rd	Rid. Mx,Rd da VEd	Rid. Mx,Rd da NEd	Rid. My,Rd da VEd	Rid. My,Rd da NEd	α	β	ρx	ρy	Verifica
74.7	SLV 16	0.376	1	-16586.3	118634.3	1	199080	851642	-1137	409967	1		1				0	0	Si

Verifica a presso/tenso flessione deviata SLD §§ 4.2.4.1.2.3 - 4.2.4.1.2.6 - 4.2.4.1.2.7 - 4.2.4.1.2.8 NTC18

Verifiche eseguite utilizzando la formula conservativa (6.2) §6.2.1 EN 1993-1-1:2005.

X	Comb.	Sfruttamento	Classe	NEd	NRd	Rid. NRd da VEd	Mx,Ed	Mx,Rd	My,Ed	My,Rd	Rid. Mx,Rd da VEd	Rid. Mx,Rd da NEd	Rid. My,Rd da VEd	Rid. My,Rd da NEd	α	β	ρx	ρy	Verifica
74.7	SLD 16	0.317	1	-15573.6	118634.3	1	157380	851642	-445	409967	1		1				0	0	Si

Verifiche ad instabilità

Caratteristiche iniziali

Membratura principale per controllo snellezza; Calcolo di snellezze ed N critici condotti secondo gli assi principali;
Curva X: b; Curva Y: c; Svergolamento: Carico all'estradosso; Curva svergolamento: b;

Dati per instabilità attorno a x

Numero rit.	Presente	Ascissa	Campata	βx/m	Vincolo a entrambi estremi	λx/m	λVer
1	Si	0					
			1-2	1	Si	10	Si, (<200)
2	Si	74.7					

Dati per instabilità attorno a y

Numero rit.	Presente	Ascissa	Campata	βy/n	k,LT	kw,LT	Vincolo a entrambi estremi	λy/n	λVer
1	Si	0							
			1-2	1	1	1	Si	16.5	Si, (<200)
2	Si	74.7							

Verifica di stabilità per pressoflessione §C.4.2.4.1.3.3.2 NTC18

X	Comb.	Sfruttamento	Classe	NEd	NRk	Mx,Ed max	Mx,Rk	My,Ed max	My,Rk	χ,x	χ,y	kxx	kxy	kyx	kyy	χ,LT	Verifica
0	SLU 132	0.615	1	-39040	124566	308218.7	894223.7	35.7	430465.2	1	1	0.541	0.303	0.79	0.505	1	Si

Verifica di stabilità per pressoflessione SLD §C.4.2.4.1.3.3.2 NTC18

X	Comb.	Sfruttamento	Classe	NEd	NRk	Mx,Ed max	Mx,Rk	My,Ed max	My,Rk	χ,x	χ,y	kxx	kxy	kyx	kyy	χ,LT	Verifica
0	SLD 13	0.303	1	-18477.9	124566	157379.9	894223.7	1263.5	430465.2	1	1	0.529	0.275	0.79	0.458	1	Si

Verifica di stabilità a taglio anima Y §4.2.4.1.2.4 [4.2.27] NTC18

η	hw	tw	hw/tw max	Verifica
1.2	15.2	0.6	55.46	Si

Verifica di stabilità a taglio anima Y SLD §4.2.4.1.2.4 [4.2.27] NTC18

η	hw	tw	hw/tw max	Verifica
1.2	15.2	0.6	55.46	Si

Verifiche a deformabilità

Mensola X: No; Mensola Y: No.

Frecce lungo X

Ascissa freccia	Combinazione	Freccia	Luce	L/f	L/f,min	Tipo	Verifica
47.3	SLE RA 1	0	74.7	10000	250	Totale	Si
44.8	SLE RA 31	0	74.7	10000	250	Totale	Si
49.8	SLE RA 30	0	74.7	10000	250	Totale	Si
44.8	SLE RA 29	0	74.7	10000	250	Totale	Si
49.8	SLE RA 28	0	74.7	10000	250	Totale	Si
32.4	SLE RA 2	0	74.7	10000	350	Variabile	Si
39.8	SLE RA 31	0	74.7	10000	350	Variabile	Si
24.9	SLE RA 30	0	74.7	10000	350	Variabile	Si
39.8	SLE RA 29	0	74.7	10000	350	Variabile	Si
24.9	SLE RA 28	0	74.7	10000	350	Variabile	Si

Frecce lungo Y

Ascissa freccia	Combinazione	Freccia	Luce	L/f	L/f,min	Tipo	Verifica
44.8	SLE RA 33	0.01	74.7	7347.4	250	Totale	Si
44.8	SLE RA 31	0.01	74.7	7347.4	250	Totale	Si
44.8	SLE RA 32	0.01	74.7	7348.1	250	Totale	Si
44.8	SLE RA 30	0.01	74.7	7348.1	250	Totale	Si
44.8	SLE RA 29	0.01	74.7	7699.9	250	Totale	Si
42.3	SLE RA 2	0	74.7	10000	350	Variabile	Si
42.3	SLE RA 31	0.007	74.7	10000	350	Variabile	Si
42.3	SLE RA 30	0.007	74.7	10000	350	Variabile	Si
42.3	SLE RA 29	0.007	74.7	10000	350	Variabile	Si
42.3	SLE RA 28	0.007	74.7	10000	350	Variabile	Si

Superelemento in acciaio composto dall'asta 20

Caratteristiche del materiale

Acciaio: S275, fyk = 2750

Caratteristiche geometriche

Lunghezza: 78.5
Nodo iniziale: 73 Nodo finale: 95
Cerniera iniziale: No Cerniera finale: No
Sovraresistenza: 0% Sisma Z: No

Caratteristiche della sezione

Sezione	Rotazione	Area	Jx	Jy	ix	iy	Wx	Wy	Wplx	Wply
HEA180	0	45.3	2512.55	924.65	7.45	4.52	293.87	102.74	325.17	156.53

Verifiche di resistenza

Verifiche a forza assiale §4.2.4.1.2.1 - §4.2.4.1.2.2 NTC18

X	Comb.	Sfruttamento	Classe	NEd	Nc,Rd	Nt,Rd	Riduzione da taglio	ρx	ρy	Verifica
0	SLU 130	0.312	1	-37025.7	118634.3		1	0	0	Si

Verifiche a forza assiale SLD §4.2.4.1.2.1 - §4.2.4.1.2.2 NTC18

X	Comb.	Sfruttamento	Classe	NEd	Nc,Rd	Nt,Rd	Riduzione da taglio	ρx	ρy	Verifica
0	SLD 3	0.134	1	-15955.9	118634.3		1	0	0	Si

Verifica a taglio X §4.2.4.1.2.4 NTC18

X	Comb.	Sfruttamento	VEd	Vc,Rd	Av	Interazione taglio-torsione	Riduzione torsione	Verifica
0	SLV 5	0.002	-107	50012.4	36.18	Considerata	0.91	Si

Verifica a taglio X SLD §4.2.4.1.2.4 NTC18

X	Comb.	Sfruttamento	VEd	Vc,Rd	Av	Interazione taglio-torsione	Riduzione torsione	Verifica
0	SLD 5	0.001	-40.8	52972.5	36.18	Considerata	0.97	Si

Verifica a taglio Y §4.2.4.1.2.4 NTC18

X	Comb.	Sfruttamento	VEd	Vc,Rd	Av	Interazione taglio-torsione	Riduzione torsione	Verifica
0	SLU 98	0.137	3016.9	21950.9	14.52	Considerata	1	Si

Verifica a taglio Y SLD §4.2.4.1.2.4 NTC18

X	Comb.	Sfruttamento	VEd	Vc,Rd	Av	Interazione taglio-torsione	Riduzione torsione	Verifica
0	SLD 10	0.074	1576.6	21256.4	14.52	Considerata	0.97	Si

Verifica a torsione §4.2.4.1.2.5 NTC18

X	Comb.	Sfruttamento torsione	TEd	TRd	Riduzione taglio resistente	Sfruttamento taglio-torsione	τEd,totale	τRd	Verifica
78.5	SLV 10	0.205	3717.5	18118.1	Considerata				Si

Verifica a torsione SLD §4.2.4.1.2.5 NTC18

X	Comb.	Sfruttamento torsione	TEd	TRd	Riduzione taglio resistente	Sfruttamento taglio-torsione	τEd,totale	τRd	Verifica
78.5	SLD 10	0.078	1410.3	18118.1	Considerata				Si

Verifica a presso/tenso flessione retta X §§ 4.2.4.1.2.3 - 4.2.4.1.2.6 - 4.2.4.1.2.7 - 4.2.4.1.2.8 NTC18

Verifiche eseguite utilizzando la formula conservativa (6.2) §6.2.1 EN 1993-1-1:2005.

X	Comb.	Sfruttamento	Classe	NEd	NRd	Rid. NRd da VEd	Mx,Ed	Mx,Rd	Rid. Mx,Rd da VEd	Rid. Mx,Rd da NEd	ρx	ρy	Verifica
0	SLU 131	0.674	1	-37025.2	118634.3	1	308056	851642	1		0	0	Si

Verifica a presso/tenso flessione deviata §§ 4.2.4.1.2.3 - 4.2.4.1.2.6 - 4.2.4.1.2.7 - 4.2.4.1.2.8 NTC18

Verifiche eseguite utilizzando la formula conservativa (6.2) §6.2.1 EN 1993-1-1:2005.

X	Comb.	Sfruttamento	Classe	NEd	NRd	Rid. NRd da VEd	Mx,Ed	Mx,Rd	My,Ed	My,Rd	Rid. Mx,Rd da VEd	Rid. Mx,Rd da NEd	Rid. My,Rd da VEd	Rid. My,Rd da NEd	α	β	ρx	ρy	Verifica
0	SLV 3	0.378	1	-16756.8	118634.3	1	199059	851642	1196	409967	1		1				0	0	Si

Verifica a presso/tenso flessione deviata SLD §§ 4.2.4.1.2.3 - 4.2.4.1.2.6 - 4.2.4.1.2.7 - 4.2.4.1.2.8 NTC18

Verifiche eseguite utilizzando la formula conservativa (6.2) §6.2.1 EN 1993-1-1:2005.

X	Comb.	Sfruttamento	Classe	NEd	NRd	Rid. NRd da VEd	Mx,Ed	Mx,Rd	My,Ed	My,Rd	Rid. Mx,Rd da VEd	Rid. Mx,Rd da NEd	Rid. My,Rd da VEd	Rid. My,Rd da NEd	α	β	ρx	ρy	Verifica
0	SLD 3	0.32	1	-15955.9	118634.3	1	157378	851642	467	409967	1		1				0	0	Si

Verifiche ad instabilità

Caratteristiche iniziali

Membratura principale per controllo snellezza; Calcolo di snellezze ed N critici condotti secondo gli assi principali;
Curva X: b; Curva Y: c; Svergolamento: Carico all'estradosso; Curva svergolamento: b;

Dati per instabilità attorno a x

Numero rit.	Presente	Ascissa	Campata	βx/m	Vincolo a entrambi estremi	λx/m	λVer
1	Si	0					
			1-2	1	Si	10.5	Si, (<200)
2	Si	78.5					

Dati per instabilità attorno a y

Numero rit.	Presente	Ascissa	Campata	βy/n	k,LT	kw,LT	Vincolo a entrambi estremi	λy/n	λVer
1	Si	0							
			1-2	1	1	1	Si	17.4	Si, (<200)
2	Si	78.5							

Verifica di stabilità per pressoflessione §C.4.2.4.1.3.3.2 NTC18

X	Comb.	Sfruttamento	Classe	NEd	NRk	Mx,Ed max	Mx,Rk	My,Ed max	My,Rk	χ,x	χ,y	kxx	kxy	kyx	kyy	χ,LT	Verifica
0	SLU 132	0.602	1	-37025.7	124566	308051.9	894223.7	33.9	430465.2	1	1	0.744	0.302	0.8	0.503	1	Si

Verifica di stabilità per pressoflessione SLD §C.4.2.4.1.3.3.2 NTC18

X	Comb.	Sfruttamento	Classe	NEd	NRk	Mx,Ed max	Mx,Rk	My,Ed max	My,Rk	χ,x	χ,y	kxx	kxy	kyx	kyy	χ,LT	Verifica
0	SLD 3	0.285	1	-15955.9	124566	157377.5	894223.7	1393.1	430465.2	1	1	0.788	0.429	0.8	0.714	1	Si

Verifica di stabilità a taglio anima Y §4.2.4.1.2.4 [4.2.27] NTC18

η	hw	tw	hw/tw max	Verifica
1.2	15.2	0.6	55.46	Si

Verifica di stabilità a taglio anima Y SLD §4.2.4.1.2.4 [4.2.27] NTC18

η	hw	tw	hw/tw max	Verifica
1.2	15.2	0.6	55.46	Si

Verifiche a deformabilità

Mensola X: No; Mensola Y: No.

Frecce lungo X

Ascissa freccia	Combinazione	Freccia	Luce	L/f	L/f,min	Tipo	Verifica
31.4	SLE RA 1	0	78.5	10000	250	Totale	Si
31.4	SLE RA 31	0	78.5	10000	250	Totale	Si

Ascissa freccia	Combinazione	Freccia	Luce	L/f	L/f,min	Tipo	Verifica
31.4	SLE RA 30	0	78.5	10000	250	Totale	Si
31.4	SLE RA 29	0	78.5	10000	250	Totale	Si
31.4	SLE RA 28	0	78.5	10000	250	Totale	Si
31.4	SLE RA 2	0	78.5	10000	350	Variabile	Si
31.4	SLE RA 31	0	78.5	10000	350	Variabile	Si
31.4	SLE RA 30	0	78.5	10000	350	Variabile	Si
31.4	SLE RA 29	0	78.5	10000	350	Variabile	Si
31.4	SLE RA 28	0	78.5	10000	350	Variabile	Si

Frecce lungo Y

Ascissa freccia	Combinazione	Freccia	Luce	L/f	L/f,min	Tipo	Verifica
36.6	SLE RA 33	0.021	78.5	3809.3	250	Totale	Si
36.6	SLE RA 31	0.021	78.5	3809.3	250	Totale	Si
36.6	SLE RA 32	0.021	78.5	3809.4	250	Totale	Si
36.6	SLE RA 30	0.021	78.5	3809.4	250	Totale	Si
36.6	SLE RA 29	0.02	78.5	3935.4	250	Totale	Si
36.6	SLE RA 33	0.011	78.5	7372	350	Variabile	Si
36.6	SLE RA 31	0.011	78.5	7372	350	Variabile	Si
36.6	SLE RA 32	0.011	78.5	7372.3	350	Variabile	Si
36.6	SLE RA 30	0.011	78.5	7372.3	350	Variabile	Si
36.6	SLE RA 29	0.01	78.5	7859.5	350	Variabile	Si

Superelemento in acciaio composto dall'asta 21

Caratteristiche del materiale

Acciaio: S275, fyk = 2750

Caratteristiche geometriche

Lunghezza: 78.5
Nodo iniziale: 74 Nodo finale: 96
Cerniera iniziale: No Cerniera finale: No
Sovraresistenza: 0% Sisma Z: No

Caratteristiche della sezione

Sezione	Rotazione	Area	Jx	Jy	ix	iy	Wx	Wy	Wplx	Wply
HEA180	0	45.3	2512.55	924.65	7.45	4.52	293.87	102.74	325.17	156.53

Verifiche di resistenza

Verifiche a forza assiale §4.2.4.1.2.1 - §4.2.4.1.2.2 NTC18

X	Comb.	Sfruttamento	Classe	NEd	Nc,Rd	Nt,Rd	Riduzione da taglio	ρx	ρy	Verifica
0	SLU 130	0.312	1	-37024.1	118634.3		1	0	0	Si

Verifiche a forza assiale SLD §4.2.4.1.2.1 - §4.2.4.1.2.2 NTC18

X	Comb.	Sfruttamento	Classe	NEd	Nc,Rd	Nt,Rd	Riduzione da taglio	ρx	ρy	Verifica
0	SLD 15	0.134	1	-15955.9	118634.3		1	0	0	Si

Verifica a taglio X §4.2.4.1.2.4 NTC18

X	Comb.	Sfruttamento	VEd	Vc,Rd	Av	Interazione taglio-torsione	Riduzione torsione	Verifica
0	SLV 9	0.002	107	50012.4	36.18	Considerata	0.91	Si

Verifica a taglio X SLD §4.2.4.1.2.4 NTC18

X	Comb.	Sfruttamento	VEd	Vc,Rd	Av	Interazione taglio-torsione	Riduzione torsione	Verifica
0	SLD 9	0.001	40.8	52972.5	36.18	Considerata	0.97	Si

Verifica a taglio Y §4.2.4.1.2.4 NTC18

X	Comb.	Sfruttamento	VEd	Vc,Rd	Av	Interazione taglio-torsione	Riduzione torsione	Verifica
0	SLU 131	0.137	3013	21950.9	14.52	Considerata	1	Si

Verifica a taglio Y SLD §4.2.4.1.2.4 NTC18

X	Comb.	Sfruttamento	VEd	Vc,Rd	Av	Interazione taglio-torsione	Riduzione torsione	Verifica
0	SLD 6	0.074	1576.6	21256.4	14.52	Considerata	0.97	Si

Verifica a torsione §4.2.4.1.2.5 NTC18

X	Comb.	Sfruttamento torsione	TEd	TRd	Riduzione taglio resistente	Sfruttamento taglio-torsione	τEd,totale	τRd	Verifica
41.8	SLV 5	0.205	-3717.5	18118.1	Considerata				Si

Verifica a torsione SLD §4.2.4.1.2.5 NTC18

X	Comb.	Sfruttamento torsione	TEd	TRd	Riduzione taglio resistente	Sfruttamento taglio-torsione	τEd,totale	τRd	Verifica
41.8	SLD 5	0.078	-1410.3	18118.1	Considerata				Si

Verifica a presso/tenso flessione retta X §§ 4.2.4.1.2.3 - 4.2.4.1.2.6 - 4.2.4.1.2.7 - 4.2.4.1.2.8 NTC18

Verifiche eseguite utilizzando la formula conservativa (6.2) §6.2.1 EN 1993-1-1:2005.

X	Comb.	Sfruttamento	Classe	NEd	NRd	Rid. NRd da VEd	Mx,Ed	Mx,Rd	Rid. Mx,Rd da VEd	Rid. Mx,Rd da NEd	ρx	ρy	Verifica
0	SLU 131	0.674	1	-37023.6	118634.3	1	308222	851642	1		0	0	Si

Verifica a presso/tenso flessione deviata §§ 4.2.4.1.2.3 - 4.2.4.1.2.6 - 4.2.4.1.2.7 - 4.2.4.1.2.8 NTC18

Verifiche eseguite utilizzando la formula conservativa (6.2) §6.2.1 EN 1993-1-1:2005.

X	Comb.	Sfruttamento	Classe	NEd	NRd	Rid. NRd da VEd	Mx,Ed	Mx,Rd	My,Ed	My,Rd	Rid. Mx,Rd da VEd	Rid. Mx,Rd da NEd	Rid. My,Rd da VEd	Rid. My,Rd da NEd	α	β	ρx	ρy	Verifica
0	SLV 15	0.378	1	-16756.8	118634.3	1	199059	851642	-1196	409967	1		1				0	0	Si

Verifica a presso/tenso flessione deviata SLD §§ 4.2.4.1.2.3 - 4.2.4.1.2.6 - 4.2.4.1.2.7 - 4.2.4.1.2.8 NTC18

Verifiche eseguite utilizzando la formula conservativa (6.2) §6.2.1 EN 1993-1-1:2005.

X	Comb.	Sfruttamento	Classe	NEd	NRd	Rid. NRd da VEd	Mx,Ed	Mx,Rd	My,Ed	My,Rd	Rid. Mx,Rd da VEd	Rid. Mx,Rd da NEd	Rid. My,Rd da VEd	Rid. My,Rd da NEd	α	β	ρx	ρy	Verifica
0	SLD 15	0.32	1	-15955.9	118634.3	1	157378	851642	-467	409967	1		1				0	0	Si

Verifiche ad instabilità

Caratteristiche iniziali

Membratura principale per controllo snellezza; Calcolo di snellezze ed N critici condotti secondo gli assi principali;
Curva X: b; Curva Y: c; Svergolamento: Carico all'estradosso; Curva svergolamento: b;

Dati per instabilità attorno a x

Numero rit.	Presente	Ascissa	Campata	βx/m	Vincolo a entrambi estremi	λx/m	λVer
1	Si	0					
			1-2	1	Si	10.5	Si, (<200)
2	Si	78.5					

Dati per instabilità attorno a y

Numero rit.	Presente	Ascissa	Campata	βy/n	k,LT	kw,LT	Vincolo a entrambi estremi	λy/n	λVer
1	Si	0							
			1-2	1	1	1	Si	17.4	Si, (<200)
2	Si	78.5							

Verifica di stabilità per pressoflessione §C.4.2.4.1.3.3.2 NTC18

X	Comb.	Sfruttamento	Classe	NEd	NRk	Mx,Ed max	Mx,Rk	My,Ed max	My,Rk	χ,x	χ,y	kxx	kxy	kyx	kyy	χ,LT	Verifica
0	SLU 132	0.602	1	-37024.1	124566	308217.7	894223.7	33.9	430465.2	1	1	0.745	0.302	0.8	0.503	1	Si

Verifica di stabilità per pressoflessione SLD §C.4.2.4.1.3.3.2 NTC18

X	Comb.	Sfruttamento	Classe	NEd	NRk	Mx,Ed max	Mx,Rk	My,Ed max	My,Rk	χ,x	χ,y	kxx	kxy	kyx	kyy	χ,LT	Verifica
0	SLD 16	0.285	1	-15955.9	124566	157377.5	894223.7	1393.1	430465.2	1	1	0.788	0.429	0.8	0.714	1	Si

Verifica di stabilità a taglio anima Y §4.2.4.1.2.4 [4.2.27] NTC18

η	hw	tw	hw/tw max	Verifica
1.2	15.2	0.6	55.46	Si

Verifica di stabilità a taglio anima Y SLD §4.2.4.1.2.4 [4.2.27] NTC18

η	hw	tw	hw/tw max	Verifica
1.2	15.2	0.6	55.46	Si

Verifiche a deformabilità

Mensola X: No; Mensola Y: No.

Frecce lungo X

Ascissa freccia	Combinazione	Freccia	Luce	L/f	L/f,min	Tipo	Verifica
31.4	SLE RA 1	0	78.5	10000	250	Totale	Si
31.4	SLE RA 31	0	78.5	10000	250	Totale	Si
31.4	SLE RA 30	0	78.5	10000	250	Totale	Si
31.4	SLE RA 29	0	78.5	10000	250	Totale	Si
31.4	SLE RA 28	0	78.5	10000	250	Totale	Si
31.4	SLE RA 2	0	78.5	10000	350	Variabile	Si
31.4	SLE RA 31	0	78.5	10000	350	Variabile	Si
31.4	SLE RA 30	0	78.5	10000	350	Variabile	Si
31.4	SLE RA 29	0	78.5	10000	350	Variabile	Si
31.4	SLE RA 28	0	78.5	10000	350	Variabile	Si

Frecce lungo Y

Ascissa freccia	Combinazione	Freccia	Luce	L/f	L/f,min	Tipo	Verifica
36.6	SLE RA 33	0.021	78.5	3803.7	250	Totale	Si
36.6	SLE RA 31	0.021	78.5	3803.7	250	Totale	Si
36.6	SLE RA 32	0.021	78.5	3803.8	250	Totale	Si
36.6	SLE RA 30	0.021	78.5	3803.8	250	Totale	Si
36.6	SLE RA 29	0.02	78.5	3930.6	250	Totale	Si
36.6	SLE RA 33	0.011	78.5	7351.1	350	Variabile	Si
36.6	SLE RA 31	0.011	78.5	7351.1	350	Variabile	Si
36.6	SLE RA 32	0.011	78.5	7351.3	350	Variabile	Si
36.6	SLE RA 30	0.011	78.5	7351.3	350	Variabile	Si
36.6	SLE RA 29	0.01	78.5	7840.3	350	Variabile	Si

Superelemento in acciaio composto dall'asta 22

Caratteristiche del materiale

Acciaio: S275, fyk = 2750

Caratteristiche geometriche

Lunghezza: 170.7
Nodo iniziale: 96 Nodo finale: 115
Cerniera iniziale: No Cerniera finale: No
Sovraresistenza: 0% Sisma Z: No

Caratteristiche della sezione

Sezione	Rotazione	Area	Jx	Jy	ix	iy	Wx	Wy	Wplx	Wply
HEA180	0	45.3	2512.55	924.65	7.45	4.52	293.87	102.74	325.17	156.53

Verifiche di resistenza

Verifiche a forza assiale §4.2.4.1.2.1 - §4.2.4.1.2.2 NTC18

X	Comb.	Sfruttamento	Classe	NEd	Nc,Rd	Nt,Rd	Riduzione da taglio	ρx	ρy	Verifica
0	SLU 130	0.287	1	-33998.9	118634.3		1	0	0	Si

Verifiche a forza assiale SLD §4.2.4.1.2.1 - §4.2.4.1.2.2 NTC18

X	Comb.	Sfruttamento	Classe	NEd	Nc,Rd	Nt,Rd	Riduzione da taglio	ρx	ρy	Verifica
0	SLD 16	0.12	1	-14285.7	118634.3		1	0	0	Si

Verifica a taglio X §4.2.4.1.2.4 NTC18

X	Comb.	Sfruttamento	VEd	Vc,Rd	Av	Interazione taglio-torsione	Riduzione torsione	Verifica
170.7	SLV 6	0.001	-63.1	54408.4	36.18	Considerata	0.99	Si

Verifica a taglio Y §4.2.4.1.2.4 NTC18

X	Comb.	Sfruttamento	VEd	Vc,Rd	Av	Interazione taglio-torsione	Riduzione torsione	Verifica
0	SLU 98	0.274	6022	21950.9	14.52	Considerata	1	Si

Verifica a taglio Y SLD §4.2.4.1.2.4 NTC18

X	Comb.	Sfruttamento	VEd	Vc,Rd	Av	Interazione taglio-torsione	Riduzione torsione	Verifica
0	SLD 13	0.161	3522.2	21937.3	14.52	Considerata	1	Si

Verifica a torsione §4.2.4.1.2.5 NTC18

X	Comb.	Sfruttamento torsione	TEd	TRd	Riduzione taglio resistente	Sfruttamento taglio-torsione	τEd,totale	τRd	Verifica
91	SLV 5	0.013	-243.4	18118.1	Considerata				Si

Verifica a torsione SLD §4.2.4.1.2.5 NTC18

X	Comb.	Sfruttamento torsione	TEd	TRd	Riduzione taglio resistente	Sfruttamento taglio-torsione	τEd,totale	τRd	Verifica
91	SLD 5	0.005	-92.5	18118.1	Considerata				Si

Verifica a presso/tenso flessione retta X §§ 4.2.4.1.2.3 - 4.2.4.1.2.6 - 4.2.4.1.2.7 - 4.2.4.1.2.8 NTC18

Verifiche eseguite utilizzando la formula conservativa (6.2) §6.2.1 EN 1993-1-1:2005.

X	Comb.	Sfruttamento	Classe	NEd	NRd	Rid. NRd da VEd	Mx,Ed	Mx,Rd	Rid. Mx,Rd da VEd	Rid. Mx,Rd da NEd	ρx	ρy	Verifica
159.3	SLU 132	0.642	1	-33301.1	118634.3	1	-307769	851642	1		0	0	Si

Verifica a presso/tenso flessione retta Y SLD §§ 4.2.4.1.2.3 - 4.2.4.1.2.6 - 4.2.4.1.2.7 - 4.2.4.1.2.8 NTC18

Verifiche eseguite utilizzando la formula conservativa (6.2) §6.2.1 EN 1993-1-1:2005.

X	Comb.	Sfruttamento	Classe	NEd	NRd	Rid. NRd da VEd	My,Ed	My,Rd	Rid. My,Rd da VEd	Rid. My,Rd da NEd	ρx	ρy	Verifica
17.1	SLD 1	0.119	1	-13714.2	118634.3	1	1341	409967	1		0	0	Si

Verifica a presso/tenso flessione deviata §§ 4.2.4.1.2.3 - 4.2.4.1.2.6 - 4.2.4.1.2.7 - 4.2.4.1.2.8 NTC18

Verifiche eseguite utilizzando la formula conservativa (6.2) §6.2.1 EN 1993-1-1:2005.

X	Comb.	Sfruttamento	Classe	NEd	NRd	Rid. NRd da VEd	Mx,Ed	Mx,Rd	My,Ed	My,Rd	Rid. Mx,Rd da VEd	Rid. Mx,Rd da NEd	Rid. My,Rd da VEd	Rid. My,Rd da NEd	α	β	ρx	ρy	Verifica
0	SLV 14	0.323	1	-14602.7	118634.3	1	162094	851642	3853	409967	1		1				0	0	Si

Verifica a presso/tenso flessione deviata SLD §§ 4.2.4.1.2.3 - 4.2.4.1.2.6 - 4.2.4.1.2.7 - 4.2.4.1.2.8 NTC18

Verifiche eseguite utilizzando la formula conservativa (6.2) §6.2.1 EN 1993-1-1:2005.

X	Comb.	Sfruttamento	Classe	NEd	NRd	Rid. NRd da VEd	Mx,Ed	Mx,Rd	My,Ed	My,Rd	Rid. Mx,Rd da VEd	Rid. Mx,Rd da NEd	Rid. My,Rd da VEd	Rid. My,Rd da NEd	α	β	ρx	ρy	Verifica
0	SLD 13	0.264	1	-14285.6	118634.3	1	118950	851642	1463	409967	1		1				0	0	Si

Verifiche ad instabilità

Caratteristiche iniziali

Membratura principale per controllo snellezza; Calcolo di snellezze ed N critici condotti secondo gli assi principali;
Curva X: b; Curva Y: c; Svergolamento: Carico all'estradosso; Curva svergolamento: b;

Dati per instabilità attorno a x

Numero rit.	Presente	Ascissa	Campata	βx/m	Vincolo a entrambi estremi	λx/m	λVer
1	Si	0					
			1-2	1	Si	22.9	Si, (<200)
2	Si	170.7					

Dati per instabilità attorno a y

Numero rit.	Presente	Ascissa	Campata	βy/n	k,LT	kw,LT	Vincolo a entrambi estremi	λy/n	λVer
1	Si	0							
			1-2	1	1	1	Si	37.8	Si, (<200)
2	Si	170.7							

Verifica di stabilità per pressoflessione §C.4.2.4.1.3.3.2 NTC18

X	Comb.	Sfruttamento	Classe	NEd	NRk	Mx,Ed max	Mx,Rk	My,Ed max	My,Rk	χ,x	χ,y	kxx	kxy	kyx	kyy	χ,LT	Verifica
0	SLU 99	0.684	1	-33998.9	124566	307783.2	894223.7	5.7	430465.2	0.977	0.879	0.731	0.6	0.97	1	0.978	Si

Verifica di stabilità per pressoflessione SLD §C.4.2.4.1.3.3.2 NTC18

X	Comb.	Sfruttamento	Classe	NEd	NRk	Mx,Ed max	Mx,Rk	My,Ed max	My,Rk	χ,x	χ,y	kxx	kxy	kyx	kyy	χ,LT	Verifica
0	SLD 13	0.28	1	-14285.6	124566	118950	894223.7	1463.1	430465.2	0.977	0.879	0.683	0.414	0.986	0.689	0.978	Si

Verifica di stabilità a taglio anima Y §4.2.4.1.2.4 [4.2.27] NTC18

η	hw	tw	hw/tw max	Verifica
1.2	15.2	0.6	55.46	Si

Verifica di stabilità a taglio anima Y SLD §4.2.4.1.2.4 [4.2.27] NTC18

η	hw	tw	hw/tw max	Verifica
1.2	15.2	0.6	55.46	Si

Verifiche a deformabilità

Mensola X: No; Mensola Y: No.

Frecce lungo X

Ascissa freccia	Combinazione	Freccia	Luce	L/f	L/f,min	Tipo	Verifica
79.6	SLE RA 1	0	170.7	10000	250	Totale	Si
85.3	SLE RA 31	0	170.7	10000	250	Totale	Si
85.3	SLE RA 30	0	170.7	10000	250	Totale	Si
85.3	SLE RA 29	0	170.7	10000	250	Totale	Si
85.3	SLE RA 28	0	170.7	10000	250	Totale	Si
39.8	SLE RA 2	0	170.7	10000	350	Variabile	Si
91	SLE RA 31	0	170.7	10000	350	Variabile	Si
91	SLE RA 30	0	170.7	10000	350	Variabile	Si
91	SLE RA 29	0	170.7	10000	350	Variabile	Si
91	SLE RA 28	0	170.7	10000	350	Variabile	Si

Frecce lungo Y

Ascissa freccia	Combinazione	Freccia	Luce	L/f	L/f,min	Tipo	Verifica
96.7	SLE RA 33	-0.104	170.7	1635.4	250	Totale	Si
96.7	SLE RA 31	-0.104	170.7	1635.4	250	Totale	Si
96.7	SLE RA 32	-0.104	170.7	1635.4	250	Totale	Si
96.7	SLE RA 30	-0.104	170.7	1635.4	250	Totale	Si
96.7	SLE RA 29	-0.102	170.7	1673.3	250	Totale	Si
108.1	SLE RA 33	-0.037	170.7	4561.6	350	Variabile	Si
108.1	SLE RA 31	-0.037	170.7	4561.6	350	Variabile	Si
108.1	SLE RA 32	-0.037	170.7	4561.8	350	Variabile	Si
108.1	SLE RA 30	-0.037	170.7	4561.8	350	Variabile	Si
108.1	SLE RA 29	-0.035	170.7	4874.2	350	Variabile	Si

Superelemento in acciaio composto dall'asta 23

Caratteristiche del materiale

Acciaio: S275, fyk = 2750

Caratteristiche geometriche

Lunghezza: 170.7
Nodo iniziale: 95 Nodo finale: 115
Cerniera iniziale: No Cerniera finale: No
Sovraresistenza: 0% Sisma Z: No

Caratteristiche della sezione

Sezione	Rotazione	Area	Jx	Jy	ix	iy	Wx	Wy	Wplx	Wply
HEA180	0	45.3	2512.55	924.65	7.45	4.52	293.87	102.74	325.17	156.53

Verifiche di resistenza

Verifiche a forza assiale §4.2.4.1.2.1 - §4.2.4.1.2.2 NTC18

X	Comb.	Sfruttamento	Classe	NEd	Nc,Rd	Nt,Rd	Riduzione da taglio	ρx	ρy	Verifica
0	SLU 130	0.287	1	-33998.5	118634.3		1	0	0	Si

Verifiche a forza assiale SLD §4.2.4.1.2.1 - §4.2.4.1.2.2 NTC18

X	Comb.	Sfruttamento	Classe	NEd	Nc,Rd	Nt,Rd	Riduzione da taglio	ρx	ρy	Verifica
0	SLD 4	0.12	1	-14285.7	118634.3		1	0	0	Si

Verifica a taglio X §4.2.4.1.2.4 NTC18

X	Comb.	Sfruttamento	VEd	Vc,Rd	Av	Interazione taglio-torsione	Riduzione torsione	Verifica
170.7	SLV 9	0.001	63.1	54408.4	36.18	Considerata	0.99	Si

Verifica a taglio Y §4.2.4.1.2.4 NTC18

X	Comb.	Sfruttamento	VEd	Vc,Rd	Av	Interazione taglio-torsione	Riduzione torsione	Verifica
0	SLU 98	0.274	6019.3	21950.9	14.52	Considerata	1	Si

Verifica a taglio Y SLD §4.2.4.1.2.4 NTC18

X	Comb.	Sfruttamento	VEd	Vc,Rd	Av	Interazione taglio-torsione	Riduzione torsione	Verifica
0	SLD 1	0.161	3522.2	21937.3	14.52	Considerata	1	Si

Verifica a torsione §4.2.4.1.2.5 NTC18

X	Comb.	Sfruttamento torsione	TEd	TRd	Riduzione taglio resistente	Sfruttamento taglio-torsione	τEd,totale	τRd	Verifica
170.7	SLV 10	0.013	243.4	18118.1	Considerata				Si

Verifica a torsione SLD §4.2.4.1.2.5 NTC18

X	Comb.	Sfruttamento torsione	TEd	TRd	Riduzione taglio resistente	Sfruttamento taglio-torsione	τEd,totale	τRd	Verifica
170.7	SLD 10	0.005	92.5	18118.1	Considerata				Si

Verifica a presso/tenso flessione retta X §§ 4.2.4.1.2.3 - 4.2.4.1.2.6 - 4.2.4.1.2.7 - 4.2.4.1.2.8 NTC18

Verifiche eseguite utilizzando la formula conservativa (6.2) §6.2.1 EN 1993-1-1:2005.

X	Comb.	Sfruttamento	Classe	NEd	NRd	Rid. NRd da VEd	Mx,Ed	Mx,Rd	Rid. Mx,Rd da VEd	Rid. Mx,Rd da NEd	ρx	ρy	Verifica
159.3	SLU 132	0.642	1	-33300.7	118634.3	1	-307800	851642	1		0	0	Si

Verifica a presso/tenso flessione retta Y SLD §§ 4.2.4.1.2.3 - 4.2.4.1.2.6 - 4.2.4.1.2.7 - 4.2.4.1.2.8 NTC18

Verifiche eseguite utilizzando la formula conservativa (6.2) §6.2.1 EN 1993-1-1:2005.

X	Comb.	Sfruttamento	Classe	NEd	NRd	Rid. NRd da VEd	My,Ed	My,Rd	Rid. My,Rd da VEd	Rid. My,Rd da NEd	ρx	ρy	Verifica
17.1	SLD 13	0.119	1	-13714.2	118634.3	1	-1341	409967	1		0	0	Si

Verifica a presso/tenso flessione deviata §§ 4.2.4.1.2.3 - 4.2.4.1.2.6 - 4.2.4.1.2.7 - 4.2.4.1.2.8 NTC18

Verifiche eseguite utilizzando la formula conservativa (6.2) §6.2.1 EN 1993-1-1:2005.

X	Comb.	Sfruttamento	Classe	NEd	NRd	Rid. NRd da VEd	Mx,Ed	Mx,Rd	My,Ed	My,Rd	Rid. Mx,Rd da VEd	Rid. Mx,Rd da NEd	Rid. My,Rd da VEd	Rid. My,Rd da NEd	α	β	ρx	ρy	Verifica
0	SLV 1	0.323	1	-14602.7	118634.3	1	162094	851642	-3853	409967	1		1				0	0	Si

Verifica a presso/tenso flessione deviata SLD §§ 4.2.4.1.2.3 - 4.2.4.1.2.6 - 4.2.4.1.2.7 - 4.2.4.1.2.8 NTC18

Verifiche eseguite utilizzando la formula conservativa (6.2) §6.2.1 EN 1993-1-1:2005.

X	Comb.	Sfruttamento	Classe	NEd	NRd	Rid. NRd da VEd	Mx,Ed	Mx,Rd	My,Ed	My,Rd	Rid. Mx,Rd da VEd	Rid. Mx,Rd da NEd	Rid. My,Rd da VEd	Rid. My,Rd da NEd	α	β	ρx	ρy	Verifica
0	SLD 1	0.264	1	-14285.6	118634.3	1	118950	851642	-1463	409967	1		1				0	0	Si

Verifiche ad instabilità

Caratteristiche iniziali

Membratura principale per controllo snellezza; Calcolo di snellezze ed N critici condotti secondo gli assi principali;
Curva X: b; Curva Y: c; Svergolamento: Carico all'estradosso; Curva svergolamento: b;

Dati per instabilità attorno a x

Numero rit.	Presente	Ascissa	Campata	βx/m	Vincolo a entrambi estremi	λx/m	λVer
1	Si	0					
			1-2	1	Si	22.9	Si, (<200)
2	Si	170.7					

Dati per instabilità attorno a y

Numero rit.	Presente	Ascissa	Campata	βy/n	k,LT	kw,LT	Vincolo a entrambi estremi	λy/n	λVer
1	Si	0							
			1-2	1	1	1	Si	37.8	Si, (<200)
2	Si	170.7							

Verifica di stabilità per pressoflessione §C.4.2.4.1.3.3.2 NTC18

X	Comb.	Sfruttamento	Classe	NEd	NRk	Mx,Ed max	Mx,Rk	My,Ed max	My,Rk	χ,x	χ,y	kxx	kxy	kyx	kyy	χ,LT	Verifica
0	SLU 132	0.684	1	-33998.5	124566	307800.3	894223.7	5.7	430465.2	0.977	0.879	0.731	0.6	0.97	0.999	0.978	Si

Verifica di stabilità per pressoflessione SLD §C.4.2.4.1.3.3.2 NTC18

X	Comb.	Sfruttamento	Classe	NEd	NRk	Mx,Ed max	Mx,Rk	My,Ed max	My,Rk	χ,x	χ,y	kxx	kxy	kyx	kyy	χ,LT	Verifica
0	SLD 1	0.28	1	-14285.6	124566	118950	894223.7	1463.1	430465.2	0.977	0.879	0.683	0.414	0.986	0.689	0.978	Si

Verifica di stabilità a taglio anima Y §4.2.4.1.2.4 [4.2.27] NTC18

η	hw	tw	hw/tw max	Verifica
1.2	15.2	0.6	55.46	Si

Verifica di stabilità a taglio anima Y SLD §4.2.4.1.2.4 [4.2.27] NTC18

η	hw	tw	hw/tw max	Verifica
1.2	15.2	0.6	55.46	Si

Verifiche a deformabilità

Mensola X: No; Mensola Y: No.

Frecce lungo X

Ascissa freccia	Combinazione	Freccia	Luce	L/f	L/f,min	Tipo	Verifica
79.6	SLE RA 1	0	170.7	10000	250	Totale	Si

Ascissa freccia	Combinazione	Freccia	Luce	L/f	L/f,min	Tipo	Verifica
85.3	SLE RA 31	0	170.7	10000	250	Totale	Si
85.3	SLE RA 30	0	170.7	10000	250	Totale	Si
85.3	SLE RA 29	0	170.7	10000	250	Totale	Si
85.3	SLE RA 28	0	170.7	10000	250	Totale	Si
39.8	SLE RA 2	0	170.7	10000	350	Variabile	Si
91	SLE RA 31	0	170.7	10000	350	Variabile	Si
91	SLE RA 30	0	170.7	10000	350	Variabile	Si
91	SLE RA 29	0	170.7	10000	350	Variabile	Si
91	SLE RA 28	0	170.7	10000	350	Variabile	Si

Frecce lungo Y

Ascissa freccia	Combinazione	Freccia	Luce	L/f	L/f,min	Tipo	Verifica
96.7	SLE RA 33	-0.104	170.7	1633.8	250	Totale	Si
96.7	SLE RA 31	-0.104	170.7	1633.8	250	Totale	Si
96.7	SLE RA 32	-0.104	170.7	1633.9	250	Totale	Si
96.7	SLE RA 30	-0.104	170.7	1633.9	250	Totale	Si
96.7	SLE RA 29	-0.102	170.7	1672	250	Totale	Si
108.1	SLE RA 33	-0.038	170.7	4550.5	350	Variabile	Si
108.1	SLE RA 31	-0.038	170.7	4550.5	350	Variabile	Si
108.1	SLE RA 32	-0.038	170.7	4550.8	350	Variabile	Si
108.1	SLE RA 30	-0.038	170.7	4550.8	350	Variabile	Si
108.1	SLE RA 29	-0.035	170.7	4864	350	Variabile	Si

Superelemento in acciaio composto dall'asta 24

Caratteristiche del materiale

Acciaio: S275, fyk = 2750

Caratteristiche geometriche

Lunghezza: 148
Nodo iniziale: 36 Nodo finale: 35
Cerniera iniziale: Svincolo: M2, M3 Cerniera finale: No
Sovraresistenza: 0% Sisma Z: No

Caratteristiche della sezione

Sezione	Rotazione	Area	Jx	Jy	ix	iy	Wx	Wy	Wplx	Wply
HEA160	0	38.82	1674.7	615.62	6.57	3.98	220.36	76.95	245.43	117.67

Verifiche di resistenza

Verifiche a forza assiale §4.2.4.1.2.1 - §4.2.4.1.2.2 NTC18

X	Comb.	Sfruttamento	Classe	NEd	Nc,Rd	Nt,Rd	Riduzione da taglio	ρx	ρy	Verifica
148	SLU 99	0.165		16727.5		101662.9	1	0	0	Si

Verifiche a forza assiale SLD §4.2.4.1.2.1 - §4.2.4.1.2.2 NTC18

X	Comb.	Sfruttamento	Classe	NEd	Nc,Rd	Nt,Rd	Riduzione da taglio	ρx	ρy	Verifica
148	SLD 16	0.072		7272		101662.9	1	0	0	Si

Verifica a taglio Y §4.2.4.1.2.4 NTC18

X	Comb.	Sfruttamento	VEd	Vc,Rd	Av	Interazione taglio-torsione	Riduzione torsione	Verifica
148	SLV 13	0.043	-853.3	19959.4	13.26	Considerata	1	Si

Verifica a taglio Y SLD §4.2.4.1.2.4 NTC18

X	Comb.	Sfruttamento	VEd	Vc,Rd	Av	Interazione taglio-torsione	Riduzione torsione	Verifica
148	SLD 13	0.021	-416.8	20013	13.26	Considerata	1	Si

Verifica a torsione §4.2.4.1.2.5 NTC18

X	Comb.	Sfruttamento torsione	TEd	TRd	Riduzione taglio resistente	Sfruttamento taglio-torsione	τEd,totale	τRd	Verifica
148	SLV 8	0.036	522.1	14685.6	Considerata				Si

Verifica a torsione SLD §4.2.4.1.2.5 NTC18

X	Comb.	Sfruttamento torsione	TEd	TRd	Riduzione taglio resistente	Sfruttamento taglio-torsione	τEd,totale	τRd	Verifica
148	SLD 8	0.013	198.1	14685.6	Considerata				Si

Verifica a presso/tenso flessione retta X §§ 4.2.4.1.2.3 - 4.2.4.1.2.6 - 4.2.4.1.2.7 - 4.2.4.1.2.8 NTC18

Verifiche eseguite utilizzando la formula conservativa (6.2) §6.2.1 EN 1993-1-1:2005.

X	Comb.	Sfruttamento	Classe	NEd	NRd	Rid. NRd da VEd	Mx,Ed	Mx,Rd	Rid. Mx,Rd da VEd	Rid. Mx,Rd da NEd	ρx	ρy	Verifica
148	SLU 132	0.187	1	16727.5	101662.9	1	14547	642783	1		0	0	Si

Verifica a presso/tenso flessione retta X SLD §§ 4.2.4.1.2.3 - 4.2.4.1.2.6 - 4.2.4.1.2.7 - 4.2.4.1.2.8 NTC18

Verifiche eseguite utilizzando la formula conservativa (6.2) §6.2.1 EN 1993-1-1:2005.

X	Comb.	Sfruttamento	Classe	NEd	NRd	Rid. NRd da VEd	Mx,Ed	Mx,Rd	Rid. Mx,Rd da VEd	Rid. Mx,Rd da NEd	ρx	ρy	Verifica
148	SLD 16	0.162	1	7272	101662.9	1	58348	642783	1		0	0	Si

Verifica a presso/tenso flessione deviata §§ 4.2.4.1.2.3 - 4.2.4.1.2.6 - 4.2.4.1.2.7 - 4.2.4.1.2.8 NTC18

Verifiche eseguite utilizzando la formula conservativa (6.2) §6.2.1 EN 1993-1-1:2005.

X	Comb.	Sfruttamento	Classe	NEd	NRd	Rid. NRd da VEd	Mx,Ed	Mx,Rd	My,Ed	My,Rd	Rid. Mx,Rd da VEd	Rid. Mx,Rd da NEd	Rid. My,Rd da VEd	Rid. My,Rd da NEd	α	β	ρx	ρy	Verifica
148	SLV 13	0.278	1	8734.6	101662.9	1	122950	642783	161	308186	1		1				0	0	Si

Verifica a presso/tenso flessione deviata SLD §§ 4.2.4.1.2.3 - 4.2.4.1.2.6 - 4.2.4.1.2.7 - 4.2.4.1.2.8 NTC18

Verifiche eseguite utilizzando la formula conservativa (6.2) §6.2.1 EN 1993-1-1:2005.

X	Comb.	Sfruttamento	Classe	NEd	NRd	Rid. NRd da VEd	Mx,Ed	Mx,Rd	My,Ed	My,Rd	Rid. Mx,Rd da VEd	Rid. Mx,Rd da NEd	Rid. My,Rd da VEd	Rid. My,Rd da NEd	α	β	ρx	ρy	Verifica
148	SLD 10	0.098	1	6442.1	101662.9	1	21703	642783	201	308186	1		1				0	0	Si

Verifiche ad instabilità

Caratteristiche iniziali

Membratura principale per controllo snellezza; Calcolo di snellezze ed N critici condotti secondo gli assi principali;
Curva X: b; Curva Y: c; Svergolamento: Carico all'estradosso; Curva svergolamento: b;

Dati per instabilità attorno a x

Numero rit.	Presente	Ascissa	Campata	βx/m	Vincolo a entrambi estremi	λx/m	λVer
1	Si	0					
			1-2	1	Si	22.5	Si, (<200)
2	Si	148					

Dati per instabilità attorno a y

Numero rit.	Presente	Ascissa	Campata	βy/n	k,LT	kw,LT	Vincolo a entrambi estremi	λy/n	λVer
1	Si	0							
			1-2	1	1	1	Si	37.2	Si, (<200)
2	Si	148							

Verifica a svergolamento con trazione §4.2.4.1.3.2 NTC18 - §5.5.3 ENV 1993-1-1:1994

X	Comb.	Sfruttamento	Classe	Obblig.	NEd	Mx,Ed	Mx,Eff,Ed	Mb,Rd,x	χ,LT	λ adim. LT	L,LT	M,critico	Verifica
69.1	SLV 1	0.061	1	Si	3438.2	-52609.4	-38946.8	642783.4	1	0.278	148	8702008.8	Si

Verifica a svergolamento con trazione SLD §4.2.4.1.3.2 NTC18 - §5.5.3 ENV 1993-1-1:1994

X	Comb.	Sfruttamento	Classe	Obblig.	NEd	Mx,Ed	Mx,Eff,Ed	Mb,Rd,x	χ,LT	λ adim. LT	L,LT	M,critico	Verifica
148	SLD 13	0.046	1	Si	7272	58348.4	29451.1	642783.4	1	0.278	148	8702008.8	Si

Verifica di stabilità per tenso-flessione deviata §5.5.3 - §5.5.4 ENV 1993-1-1:1994

X	Comb.	Sfruttamento	Classe	NEd	Mx,Ed	Mx,Eff,Ed	My,Ed	χ,LT	kLT	ky	M,critico	Wx	Wy	Verifica
148	SLV 3	0.152	1	3438.2	-110954.6	-97291.9	-160.6	1	1	1	8702008.8	245.4	117.7	Si

Verifica di stabilità a taglio anima Y §4.2.4.1.2.4 [4.2.27] NTC18

η	hw	tw	hw/tw max	Verifica
1.2	13.4	0.6	55.46	Si

Verifica di stabilità a taglio anima Y SLD §4.2.4.1.2.4 [4.2.27] NTC18

η	hw	tw	hw/tw max	Verifica
1.2	13.4	0.6	55.46	Si

Verifiche a deformabilità

Mensola X: No; Mensola Y: No.

Frecce lungo X

Ascissa freccia	Combinazione	Freccia	Luce	L/f	L/f,min	Tipo	Verifica
98.7	SLE RA 1	0	148	10000	250	Totale	Si
83.9	SLE RA 31	0	148	10000	250	Totale	Si
83.9	SLE RA 30	0	148	10000	250	Totale	Si
83.9	SLE RA 29	0	148	10000	250	Totale	Si
83.9	SLE RA 28	0	148	10000	250	Totale	Si
133.2	SLE RA 2	0	148	10000	350	Variabile	Si
83.9	SLE RA 31	0	148	10000	350	Variabile	Si
83.9	SLE RA 30	0	148	10000	350	Variabile	Si
83.9	SLE RA 29	0	148	10000	350	Variabile	Si
83.9	SLE RA 28	0	148	10000	350	Variabile	Si

Frecce lungo Y

Ascissa freccia	Combinazione	Freccia	Luce	L/f	L/f,min	Tipo	Verifica
88.8	SLE RA 1	0.002	148	10000	250	Totale	Si
88.8	SLE RA 31	0.004	148	10000	250	Totale	Si
88.8	SLE RA 30	0.004	148	10000	250	Totale	Si
88.8	SLE RA 29	0.003	148	10000	250	Totale	Si
88.8	SLE RA 28	0.003	148	10000	250	Totale	Si
83.9	SLE RA 2	0	148	10000	350	Variabile	Si
83.9	SLE RA 31	0.002	148	10000	350	Variabile	Si
83.9	SLE RA 30	0.002	148	10000	350	Variabile	Si
83.9	SLE RA 29	0.002	148	10000	350	Variabile	Si
83.9	SLE RA 28	0.002	148	10000	350	Variabile	Si

Superelemento in acciaio composto dall'asta 25

Caratteristiche del materiale

Acciaio: S275, fyk = 2750

Caratteristiche geometriche

Lunghezza: 299

Nodo iniziale: 35 Nodo finale: 34
Cerniera iniziale: No Cerniera finale: No
Sovraresistenza: 0% Sisma Z: No

Caratteristiche della sezione

Sezione	Rotazione	Area	Jx	Jy	ix	iy	Wx	Wy	Wplx	Wply
HEA160	0	38.82	1674.7	615.62	6.57	3.98	220.36	76.95	245.43	117.67

Verifiche di resistenza

Verifiche a forza assiale §4.2.4.1.2.1 - §4.2.4.1.2.2 NTC18

X	Comb.	Sfruttamento	Classe	NEd	Nc,Rd	Nt,Rd	Riduzione da taglio	ρx	ρy	Verifica
10	SLU 99	0.222		22528.4		101662.9	1	0	0	Si

Verifiche a forza assiale SLD §4.2.4.1.2.1 - §4.2.4.1.2.2 NTC18

X	Comb.	Sfruttamento	Classe	NEd	Nc,Rd	Nt,Rd	Riduzione da taglio	ρx	ρy	Verifica
279.1	SLD 10	0.07		7114.2		101662.9	1	0	0	Si

Verifica a taglio Y §4.2.4.1.2.4 NTC18

X	Comb.	Sfruttamento	VEd	Vc,Rd	Av	Interazione taglio-torsione	Riduzione torsione	Verifica
299	SLV 2	0.041	-827.8	20045.7	13.26	Considerata	1	Si

Verifica a taglio Y SLD §4.2.4.1.2.4 NTC18

X	Comb.	Sfruttamento	VEd	Vc,Rd	Av	Interazione taglio-torsione	Riduzione torsione	Verifica
299	SLD 1	0.02	-395.7	20045.7	13.26	Considerata	1	Si

Verifica a presso/tenso flessione retta X §§ 4.2.4.1.2.3 - 4.2.4.1.2.6 - 4.2.4.1.2.7 - 4.2.4.1.2.8 NTC18

Verifiche eseguite utilizzando la formula conservativa (6.2) §6.2.1 EN 1993-1-1:2005.

X	Comb.	Sfruttamento	Classe	NEd	NRd	Rid. NRd da VEd	Mx,Ed	Mx,Rd	Rid. Mx,Rd da VEd	Rid. Mx,Rd da NEd	ρx	ρy	Verifica
0	SLU 99	0.244	1	22528.4	101662.9	1	14547	642783	1		0	0	Si

Verifica a presso/tenso flessione deviata §§ 4.2.4.1.2.3 - 4.2.4.1.2.6 - 4.2.4.1.2.7 - 4.2.4.1.2.8 NTC18

Verifiche eseguite utilizzando la formula conservativa (6.2) §6.2.1 EN 1993-1-1:2005.

X	Comb.	Sfruttamento	Classe	NEd	NRd	Rid. NRd da VEd	Mx,Ed	Mx,Rd	My,Ed	My,Rd	Rid. Mx,Rd da VEd	Rid. Mx,Rd da NEd	Rid. My,Rd da VEd	Rid. My,Rd da NEd	α	β	ρx	ρy	Verifica
0	SLV 16	0.263	1	7114.2	101662.9	1	122950	642783	-458	308186	1		1				0	0	Si

Verifica a presso/tenso flessione deviata SLD §§ 4.2.4.1.2.3 - 4.2.4.1.2.6 - 4.2.4.1.2.7 - 4.2.4.1.2.8 NTC18

Verifiche eseguite utilizzando la formula conservativa (6.2) §6.2.1 EN 1993-1-1:2005.

X	Comb.	Sfruttamento	Classe	NEd	NRd	Rid. NRd da VEd	Mx,Ed	Mx,Rd	My,Ed	My,Rd	Rid. Mx,Rd da VEd	Rid. Mx,Rd da NEd	Rid. My,Rd da VEd	Rid. My,Rd da NEd	α	β	ρx	ρy	Verifica
0	SLD 16	0.161	1	7114.2	101662.9	1	58348	642783	-174	308186	1		1				0	0	Si

Verifiche ad instabilità

Caratteristiche iniziali

Membratura principale per controllo snellezza; Calcolo di snellezze ed N critici condotti secondo gli assi principali;
Curva X: b; Curva Y: c; Svergolamento: Carico all'estradosso; Curva svergolamento: b;

Dati per instabilità attorno a x

Numero rit.	Presente	Ascissa	Campata	βx/m	Vincolo a entrambi estremi	λx/m	λVer
1	Si	0					
			1-2	1	Si	45.5	Si, (<200)
2	Si	299					

Dati per instabilità attorno a y

Numero rit.	Presente	Ascissa	Campata	βy/n	k,LT	kw,LT	Vincolo a entrambi estremi	λy/n	λVer
1	Si	0							
			1-2	1	1	1	Si	75.1	Si, (<200)
2	Si	299							

Verifica di stabilità per tenso-flessione deviata §5.5.3 - §5.5.4 ENV 1993-1-1:1994

X	Comb.	Sfruttamento	Classe	NEd	Mx,Ed	Mx,Eff,Ed	My,Ed	χ,LT	kLT	ky	M,critico	Wx	Wy	Verifica
0	SLV 16	0.178	1	7114.2	122949.7	94679.6	-457.6	0.836	1	1	1151208.3	245.4	117.7	Si

Verifica di stabilità per tenso-flessione deviata SLD §5.5.3 - §5.5.4 ENV 1993-1-1:1994

X	Comb.	Sfruttamento	Classe	NEd	Mx,Ed	Mx,Eff,Ed	My,Ed	χ,LT	kLT	ky	M,critico	Wx	Wy	Verifica
299	SLD 4	0.057	1	7114.2	58348.4	30078.2	-174.4	0.836	1	1	1151208.3	245.4	117.7	Si

Verifica di stabilità a taglio anima Y §4.2.4.1.2.4 [4.2.27] NTC18

η	hw	tw	hw/tw max	Verifica
1.2	13.4	0.6	55.46	Si

Verifica di stabilità a taglio anima Y SLD §4.2.4.1.2.4 [4.2.27] NTC18

η	hw	tw	hw/tw max	Verifica
1.2	13.4	0.6	55.46	Si

Verifiche a deformabilità

Mensola X: No; Mensola Y: No.

Frecce lungo X

Ascissa freccia	Combinazione	Freccia	Luce	L/f	L/f,min	Tipo	Verifica
149.5	SLE RA 1	0	299	10000	250	Totale	Si
149.5	SLE RA 31	0	299	10000	250	Totale	Si
149.5	SLE RA 30	0	299	10000	250	Totale	Si
149.5	SLE RA 29	0	299	10000	250	Totale	Si
149.5	SLE RA 28	0	299	10000	250	Totale	Si
149.5	SLE RA 2	0	299	10000	350	Variabile	Si
149.5	SLE RA 31	0	299	10000	350	Variabile	Si
149.5	SLE RA 30	0	299	10000	350	Variabile	Si
149.5	SLE RA 29	0	299	10000	350	Variabile	Si
149.5	SLE RA 28	0	299	10000	350	Variabile	Si

Frecce lungo Y

Ascissa freccia	Combinazione	Freccia	Luce	L/f	L/f,min	Tipo	Verifica
149.5	SLE RA 1	0.01	299	10000	250	Totale	Si
149.5	SLE RA 31	0.023	299	10000	250	Totale	Si
149.5	SLE RA 30	0.023	299	10000	250	Totale	Si
149.5	SLE RA 29	0.023	299	10000	250	Totale	Si
149.5	SLE RA 28	0.023	299	10000	250	Totale	Si
149.5	SLE RA 2	0	299	10000	350	Variabile	Si
149.5	SLE RA 31	0.014	299	10000	350	Variabile	Si
149.5	SLE RA 30	0.014	299	10000	350	Variabile	Si
149.5	SLE RA 29	0.013	299	10000	350	Variabile	Si
149.5	SLE RA 28	0.013	299	10000	350	Variabile	Si

Superelemento in acciaio composto dall'asta 26

Caratteristiche del materiale

Acciaio: S275, fyk = 2750

Caratteristiche geometriche

Lunghezza: 148
Nodo iniziale: 34 Nodo finale: 33
Cerniera iniziale: No Cerniera finale: Svincolo: M2, M3
Sovraresistenza: 0% Sisma Z: No

Caratteristiche della sezione

Sezione	Rotazione	Area	Jx	Jy	ix	iy	Wx	Wy	Wplx	Wply
HEA160	0	38.82	1674.7	615.62	6.57	3.98	220.36	76.95	245.43	117.67

Verifiche di resistenza

Verifiche a forza assiale §4.2.4.1.2.1 - §4.2.4.1.2.2 NTC18

X	Comb.	Sfruttamento	Classe	NEd	Nc,Rd	Nt,Rd	Riduzione da taglio	ρx	ρy	Verifica
118.4	SLU 132	0.164		16718.8		101662.9	1	0	0	Si

Verifiche a forza assiale SLD §4.2.4.1.2.1 - §4.2.4.1.2.2 NTC18

X	Comb.	Sfruttamento	Classe	NEd	Nc,Rd	Nt,Rd	Riduzione da taglio	ρx	ρy	Verifica
148	SLD 3	0.072		7272		101662.9	1	0	0	Si

Verifica a taglio Y §4.2.4.1.2.4 NTC18

X	Comb.	Sfruttamento	VEd	Vc,Rd	Av	Interazione taglio-torsione	Riduzione torsione	Verifica
0	SLV 2	0.043	853.3	19959.4	13.26	Considerata	1	Si

Verifica a taglio Y SLD §4.2.4.1.2.4 NTC18

X	Comb.	Sfruttamento	VEd	Vc,Rd	Av	Interazione taglio-torsione	Riduzione torsione	Verifica
0	SLD 1	0.021	416.8	20013	13.26	Considerata	1	Si

Verifica a torsione §4.2.4.1.2.5 NTC18

X	Comb.	Sfruttamento torsione	TEd	TRd	Riduzione taglio resistente	Sfruttamento taglio-torsione	τEd,totale	τRd	Verifica
148	SLV 11	0.036	-522.1	14685.6	Considerata				Si

Verifica a torsione SLD §4.2.4.1.2.5 NTC18

X	Comb.	Sfruttamento torsione	TEd	TRd	Riduzione taglio resistente	Sfruttamento taglio-torsione	τEd,totale	τRd	Verifica
148	SLD 11	0.013	-198.1	14685.6	Considerata				Si

Verifica a presso/tenso flessione retta X §§ 4.2.4.1.2.3 - 4.2.4.1.2.6 - 4.2.4.1.2.7 - 4.2.4.1.2.8 NTC18

Verifiche eseguite utilizzando la formula conservativa (6.2) §6.2.1 EN 1993-1-1:2005.

X	Comb.	Sfruttamento	Classe	NEd	NRd	Rid. NRd da VEd	Mx,Ed	Mx,Rd	Rid. Mx,Rd da VEd	Rid. Mx,Rd da NEd	ρx	ρy	Verifica
0	SLU 99	0.186	1	16718.8	101662.9	1	14074	642783	1		0	0	Si

Verifica a presso/tenso flessione retta X SLD §§ 4.2.4.1.2.3 - 4.2.4.1.2.6 - 4.2.4.1.2.7 - 4.2.4.1.2.8 NTC18

Verifiche eseguite utilizzando la formula conservativa (6.2) §6.2.1 EN 1993-1-1:2005.

X	Comb.	Sfruttamento	Classe	NEd	NRd	Rid. NRd da VEd	Mx,Ed	Mx,Rd	Rid. Mx,Rd da VEd	Rid. Mx,Rd da NEd	ρx	ρy	Verifica
0	SLD 4	0.162	1	7272	101662.9	1	58348	642783	1		0	0	Si

Verifica a presso/tenso flessione deviata §§ 4.2.4.1.2.3 - 4.2.4.1.2.6 - 4.2.4.1.2.7 - 4.2.4.1.2.8 NTC18

Verifiche eseguite utilizzando la formula conservativa (6.2) §6.2.1 EN 1993-1-1:2005.

X	Comb.	Sfruttamento	Classe	NEd	NRd	Rid. NRd da VEd	Mx,Ed	Mx,Rd	My,Ed	My,Rd	Rid. Mx,Rd da VEd	Rid. Mx,Rd da NEd	Rid. My,Rd da VEd	Rid. My,Rd da NEd	α	β	ρx	ρy	Verifica
0	SLV 1	0.278	1	8734.6	101662.9	1	122950	642783	161	308186	1		1				0	0	Si

Verifica a presso/tenso flessione deviata SLD §§ 4.2.4.1.2.3 - 4.2.4.1.2.6 - 4.2.4.1.2.7 - 4.2.4.1.2.8 NTC18

Verifiche eseguite utilizzando la formula conservativa (6.2) §6.2.1 EN 1993-1-1:2005.

X	Comb.	Sfruttamento	Classe	NEd	NRd	Rid. NRd da VEd	Mx,Ed	Mx,Rd	My,Ed	My,Rd	Rid. Mx,Rd da VEd	Rid. Mx,Rd da NEd	Rid. My,Rd da VEd	Rid. My,Rd da NEd	α	β	ρx	ρy	Verifica
0	SLD 5	0.098	1	6442.1	101662.9	1	21703	642783	201	308186	1		1				0	0	Si

Verifiche ad instabilità

Caratteristiche iniziali

Membratura principale per controllo snellezza; Calcolo di snellezze ed N critici condotti secondo gli assi principali;
Curva X: b; Curva Y: c; Svergolamento: Carico all'estradosso; Curva svergolamento: b;

Dati per instabilità attorno a x

Numero rit.	Presente	Ascissa	Campata	βx/m	Vincolo a entrambi estremi	λx/m	λVer
1	Si	0					
			1-2	1	Si	22.5	Si, (<200)
2	Si	148					

Dati per instabilità attorno a y

Numero rit.	Presente	Ascissa	Campata	βy/n	k,LT	kw,LT	Vincolo a entrambi estremi	λy/n	λVer
1	Si	0							
			1-2	1	1	1	Si	37.2	Si, (<200)
2	Si	148							

Verifica a svergolamento con trazione §4.2.4.1.3.2 NTC18 - §5.5.3 ENV 1993-1-1:1994

X	Comb.	Sfruttamento	Classe	Obblig.	NEd	Mx,Ed	Mx,Eff,Ed	Mb,Rd,x	χ,LT	λ adim. LT	L,LT	M,critico	Verifica
78.9	SLV 14	0.061	1	Si	3438.2	-52609.4	-38946.8	642783.4	1	0.278	148	8702008.8	Si

Verifica a svergolamento con trazione SLD §4.2.4.1.3.2 NTC18 - §5.5.3 ENV 1993-1-1:1994

X	Comb.	Sfruttamento	Classe	Obblig.	NEd	Mx,Ed	Mx,Eff,Ed	Mb,Rd,x	χ,LT	λ adim. LT	L,LT	M,critico	Verifica
0	SLD 1	0.046	1	Si	7272	58348.4	29451.1	642783.4	1	0.278	148	8702008.8	Si

Verifica di stabilità per tenso-flessione deviata §5.5.3 - §5.5.4 ENV 1993-1-1:1994

X	Comb.	Sfruttamento	Classe	NEd	Mx,Ed	Mx,Eff,Ed	My,Ed	χ,LT	kLT	ky	M,critico	Wx	Wy	Verifica
0	SLV 15	0.152	1	3438.2	-110954.6	-97291.9	-160.6	1	1	1	8702008.8	245.4	117.7	Si

Verifica di stabilità a taglio anima Y §4.2.4.1.2.4 [4.2.27] NTC18

η	hw	tw	hw/tw max	Verifica
1.2	13.4	0.6	55.46	Si

Verifica di stabilità a taglio anima Y SLD §4.2.4.1.2.4 [4.2.27] NTC18

η	hw	tw	hw/tw max	Verifica
1.2	13.4	0.6	55.46	Si

Verifiche a deformabilità

Mensola X: No; Mensola Y: No.

Frecce lungo X

Ascissa freccia	Combinazione	Freccia	Luce	L/f	L/f,min	Tipo	Verifica
49.3	SLE RA 1	0	148	10000	250	Totale	Si
59.2	SLE RA 31	0	148	10000	250	Totale	Si
59.2	SLE RA 30	0	148	10000	250	Totale	Si
59.2	SLE RA 29	0	148	10000	250	Totale	Si
59.2	SLE RA 28	0	148	10000	250	Totale	Si
14.8	SLE RA 2	0	148	10000	350	Variabile	Si
64.1	SLE RA 31	0	148	10000	350	Variabile	Si
64.1	SLE RA 30	0	148	10000	350	Variabile	Si
64.1	SLE RA 29	0	148	10000	350	Variabile	Si
64.1	SLE RA 28	0	148	10000	350	Variabile	Si

Frecce lungo Y

Ascissa freccia	Combinazione	Freccia	Luce	L/f	L/f,min	Tipo	Verifica
59.2	SLE RA 1	0.002	148	10000	250	Totale	Si
59.2	SLE RA 31	0.003	148	10000	250	Totale	Si
59.2	SLE RA 30	0.003	148	10000	250	Totale	Si
59.2	SLE RA 29	0.003	148	10000	250	Totale	Si
59.2	SLE RA 28	0.003	148	10000	250	Totale	Si
64.1	SLE RA 2	0	148	10000	350	Variabile	Si
64.1	SLE RA 31	0.002	148	10000	350	Variabile	Si
64.1	SLE RA 30	0.002	148	10000	350	Variabile	Si
64.1	SLE RA 29	0.002	148	10000	350	Variabile	Si
64.1	SLE RA 28	0.002	148	10000	350	Variabile	Si

Superelemento in acciaio composto dall'asta 27

Caratteristiche del materiale

Acciaio: S275, fyk = 2750

Caratteristiche geometriche

Lunghezza: 215.2
Nodo iniziale: 7 Nodo finale: 35
Cerniera iniziale: Svincolo: M2, M3 Cerniera finale: Svincolo: M2, M3
Sovraresistenza: 0% Sisma Z: No

Caratteristiche della sezione

Sezione	Rotazione	Area	Jx	Jy	ix	iy	Wx	Wy	Wplx	Wply
HEA160	0	38.82	1674.7	615.62	6.57	3.98	220.36	76.95	245.43	117.67

Verifiche di resistenza

Verifiche a forza assiale §4.2.4.1.2.1 - §4.2.4.1.2.2 NTC18

X	Comb.	Sfruttamento	Classe	NEd	Nc,Rd	Nt,Rd	Riduzione da taglio	ρx	ρy	Verifica
215.2	SLV 2	0.036		3628.9		101662.9	1	0	0	Si

Verifiche a forza assiale SLD §4.2.4.1.2.1 - §4.2.4.1.2.2 NTC18

X	Comb.	Sfruttamento	Classe	NEd	Nc,Rd	Nt,Rd	Riduzione da taglio	ρx	ρy	Verifica
215.2	SLD 2	0.018		1866		101662.9	1	0	0	Si

Verifica a taglio Y §4.2.4.1.2.4 NTC18

X	Comb.	Sfruttamento	VEd	Vc,Rd	Av	Interazione taglio-torsione	Riduzione torsione	Verifica
0	SLU 92	0.002	37.7	20045.7	13.26	Considerata	1	Si

Verifica a taglio Y SLD §4.2.4.1.2.4 NTC18

X	Comb.	Sfruttamento	VEd	Vc,Rd	Av	Interazione taglio-torsione	Riduzione torsione	Verifica
0	SLD 12	0.001	29	19889.6	13.26	Considerata	0.99	Si

Verifica a torsione §4.2.4.1.2.5 NTC18

X	Comb.	Sfruttamento torsione	TEd	TRd	Riduzione taglio resistente	Sfruttamento taglio-torsione	τEd,totale	τRd	Verifica
215.2	SLV 11	0.051	748.4	14685.6	Considerata				Si

Verifica a torsione SLD §4.2.4.1.2.5 NTC18

X	Comb.	Sfruttamento torsione	TEd	TRd	Riduzione taglio resistente	Sfruttamento taglio-torsione	τEd,totale	τRd	Verifica
100.4	SLD 12	0.019	284.7	14685.6	Considerata				Si

Verifica a flessione semplice X SLD §§ 4.2.4.1.2.3 - 4.2.4.1.2.6 - 4.2.4.1.2.7 - 4.2.4.1.2.8 NTC18

X	Comb.	Sfruttamento	Classe	Mx,Ed	Mx,Rd	Rid. Mx,Rd da VEd	ρx	ρy	Verifica
107.6	SLD 9	0.002	1	-1561.1	642783.4	1	0	0	Si

Verifica a presso/tenso flessione retta X §§ 4.2.4.1.2.3 - 4.2.4.1.2.6 - 4.2.4.1.2.7 - 4.2.4.1.2.8 NTC18

Verifiche eseguite utilizzando la formula conservativa (6.2) §6.2.1 EN 1993-1-1:2005.

X	Comb.	Sfruttamento	Classe	NEd	NRd	Rid. NRd da VEd	Mx,Ed	Mx,Rd	Rid. Mx,Rd da VEd	Rid. Mx,Rd da NEd	ρx	ρy	Verifica
107.6	SLV 2	0.038	1	3613.6	101662.9	1	-1561	642783	1		0	0	Si

Verifica a presso/tenso flessione retta X SLD §§ 4.2.4.1.2.3 - 4.2.4.1.2.6 - 4.2.4.1.2.7 - 4.2.4.1.2.8 NTC18

Verifiche eseguite utilizzando la formula conservativa (6.2) §6.2.1 EN 1993-1-1:2005.

X	Comb.	Sfruttamento	Classe	NEd	NRd	Rid. NRd da VEd	Mx,Ed	Mx,Rd	Rid. Mx,Rd da VEd	Rid. Mx,Rd da NEd	ρx	ρy	Verifica
107.6	SLD 2	0.021	1	1850.7	101662.9	1	-1561	642783	1		0	0	Si

Verifiche ad instabilità

Caratteristiche iniziali

Membratura principale per controllo snellezza; Calcolo di snellezze ed N critici condotti secondo gli assi principali;
Curva X: b; Curva Y: c; Svergolamento: Carico all'estradosso; Curva svergolamento: b;

Dati per instabilità attorno a x

Numero rit.	Presente	Ascissa	Campata	βx/m	Vincolo a entrambi estremi	λx/m	λVer
1	Si	0					
			1-2	1	Si	32.8	Si, (<200)
2	Si	215.2					

Dati per instabilità attorno a y

Numero rit.	Presente	Ascissa	Campata	βy/n	k,LT	kw,LT	Vincolo a entrambi estremi	λy/n	λVer
1	Si	0							
			1-2	1	1	1	Si	54	Si, (<200)
2	Si	215.2							

Verifica a svergolamento SLD §4.2.4.1.3.2 NTC18

X	Comb.	Sfruttamento	Classe	Obblig.	Mx,Ed	Mb,Rd,x	χ,LT	λ adim. LT	L,LT	M,critico	Verifica
107.6	SLD 9	0.003	1	Si	-1561.1	588430.1	0.915	0.604	215.2	1851896.4	Si

Verifica di stabilità per pressoflessione §C.4.2.4.1.3.3.2 NTC18

X	Comb.	Sfruttamento	Classe	NEd	NRk	Mx,Ed max	Mx,Rk	My,Ed max	My,Rk	χ,x	χ,y	kxx	kxy	kyx	kyy	χ,LT	Verifica
0	SLV 15	0.038	1	-2784.8	106746.1	1561.1	674922.6	1.1	323595.1	0.935	0.772	0.955	0.583	0.997	0.972	0.915	Si

Verifica di stabilità per pressoflessione SLD §C.4.2.4.1.3.3.2 NTC18

X	Comb.	Sfruttamento	Classe	NEd	NRk	Mx,Ed max	Mx,Rk	My,Ed max	My,Rk	χ,x	χ,y	kxx	kxy	kyx	kyy	χ,LT	Verifica
0	SLD 15	0.016	1	-1021.9	106746.1	1561.1	674922.6	1.1	323595.1	0.935	0.772	0.952	0.575	0.999	0.958	0.915	Si

Verifica di stabilità a taglio anima Y §4.2.4.1.2.4 [4.2.27] NTC18

η	hw	tw	hw/tw max	Verifica
1.2	13.4	0.6	55.46	Si

Verifica di stabilità a taglio anima Y SLD §4.2.4.1.2.4 [4.2.27] NTC18

η	hw	tw	hw/tw max	Verifica
1.2	13.4	0.6	55.46	Si

Verifiche a deformabilità

Mensola X: No; Mensola Y: No.

Frecce lungo X

Ascissa freccia	Combinazione	Freccia	Luce	L/f	L/f,min	Tipo	Verifica
107.6	SLE RA 1	0	215.2	10000	250	Totale	Si
107.6	SLE RA 31	0	215.2	10000	250	Totale	Si
107.6	SLE RA 30	0	215.2	10000	250	Totale	Si
107.6	SLE RA 29	0	215.2	10000	250	Totale	Si
107.6	SLE RA 28	0	215.2	10000	250	Totale	Si
114.7	SLE RA 2	0	215.2	10000	350	Variabile	Si
200.8	SLE RA 31	0	215.2	10000	350	Variabile	Si
200.8	SLE RA 30	0	215.2	10000	350	Variabile	Si
200.8	SLE RA 29	0	215.2	10000	350	Variabile	Si
200.8	SLE RA 28	0	215.2	10000	350	Variabile	Si

Frecce lungo Y

Ascissa freccia	Combinazione	Freccia	Luce	L/f	L/f,min	Tipo	Verifica
107.6	SLE RA 1	-0.002	215.2	10000	250	Totale	Si
107.6	SLE RA 31	-0.002	215.2	10000	250	Totale	Si
107.6	SLE RA 30	-0.002	215.2	10000	250	Totale	Si
107.6	SLE RA 29	-0.002	215.2	10000	250	Totale	Si
107.6	SLE RA 28	-0.002	215.2	10000	250	Totale	Si
164.9	SLE RA 2	0	215.2	10000	350	Variabile	Si
164.9	SLE RA 31	0	215.2	10000	350	Variabile	Si
164.9	SLE RA 30	0	215.2	10000	350	Variabile	Si
164.9	SLE RA 29	0	215.2	10000	350	Variabile	Si
164.9	SLE RA 28	0	215.2	10000	350	Variabile	Si

Superelemento in acciaio composto dall'asta 28

Caratteristiche del materiale

Acciaio: S275, fyk = 2750

Caratteristiche geometriche

Lunghezza: 215.2
Nodo iniziale: 6 Nodo finale: 34
Cerniera iniziale: Svincolo: M2, M3 Cerniera finale: Svincolo: M2, M3
Sovraresistenza: 0% Sisma Z: No

Caratteristiche della sezione

Sezione	Rotazione	Area	Jx	Jy	ix	iy	Wx	Wy	Wplx	Wply
HEA160	0	38.82	1674.7	615.62	6.57	3.98	220.36	76.95	245.43	117.67

Verifiche di resistenza

Verifiche a forza assiale §4.2.4.1.2.1 - §4.2.4.1.2.2 NTC18

X	Comb.	Sfruttamento	Classe	NEd	Nc,Rd	Nt,Rd	Riduzione da taglio	ρx	ρy	Verifica
215.2	SLV 14	0.036		3628.9		101662.9	1	0	0	Si

Verifiche a forza assiale SLD §4.2.4.1.2.1 - §4.2.4.1.2.2 NTC18

X	Comb.	Sfruttamento	Classe	NEd	Nc,Rd	Nt,Rd	Riduzione da taglio	ρx	ρy	Verifica
215.2	SLD 13	0.018		1866		101662.9	1	0	0	Si

Verifica a taglio Y §4.2.4.1.2.4 NTC18

X	Comb.	Sfruttamento	VEd	Vc,Rd	Av	Interazione taglio-torsione	Riduzione torsione	Verifica
0	SLU 99	0.002	37.7	20045.7	13.26	Considerata	1	Si

Verifica a taglio Y SLD §4.2.4.1.2.4 NTC18

X	Comb.	Sfruttamento	VEd	Vc,Rd	Av	Interazione taglio-torsione	Riduzione torsione	Verifica
0	SLD 7	0.001	29	19889.6	13.26	Considerata	0.99	Si

Verifica a torsione §4.2.4.1.2.5 NTC18

X	Comb.	Sfruttamento torsione	TEd	TRd	Riduzione taglio resistente	Sfruttamento taglio-torsione	τEd,totale	τRd	Verifica
215.2	SLV 8	0.051	-748.4	14685.6	Considerata				Si

Verifica a torsione SLD §4.2.4.1.2.5 NTC18

X	Comb.	Sfruttamento torsione	TEd	TRd	Riduzione taglio resistente	Sfruttamento taglio-torsione	τEd,totale	τRd	Verifica
215.2	SLD 8	0.019	-284.7	14685.6	Considerata				Si

Verifica a flessione semplice X SLD §§ 4.2.4.1.2.3 - 4.2.4.1.2.6 - 4.2.4.1.2.7 - 4.2.4.1.2.8 NTC18

X	Comb.	Sfruttamento	Classe	Mx,Ed	Mx,Rd	Rid. Mx,Rd da VEd	ρx	ρy	Verifica
107.6	SLD 5	0.002	1	-1561.1	642783.4	1	0	0	Si

Verifica a presso/tenso flessione retta X §§ 4.2.4.1.2.3 - 4.2.4.1.2.6 - 4.2.4.1.2.7 - 4.2.4.1.2.8 NTC18

Verifiche eseguite utilizzando la formula conservativa (6.2) §6.2.1 EN 1993-1-1:2005.

X	Comb.	Sfruttamento	Classe	NEd	NRd	Rid. NRd da VEd	Mx,Ed	Mx,Rd	Rid. Mx,Rd da VEd	Rid. Mx,Rd da NEd	ρx	ρy	Verifica
107.6	SLV 13	0.038	1	3613.6	101662.9	1	-1561	642783	1		0	0	Si

Verifica a presso/tenso flessione retta X SLD §§ 4.2.4.1.2.3 - 4.2.4.1.2.6 - 4.2.4.1.2.7 - 4.2.4.1.2.8 NTC18

Verifiche eseguite utilizzando la formula conservativa (6.2) §6.2.1 EN 1993-1-1:2005.

X	Comb.	Sfruttamento	Classe	NEd	NRd	Rid. NRd da VEd	Mx,Ed	Mx,Rd	Rid. Mx,Rd da VEd	Rid. Mx,Rd da NEd	ρx	ρy	Verifica
107.6	SLD 13	0.021	1	1850.7	101662.9	1	-1561	642783	1		0	0	Si

Verifiche ad instabilità

Caratteristiche iniziali

Membratura principale per controllo snellezza; Calcolo di snellezze ed N critici condotti secondo gli assi principali;
Curva X: b; Curva Y: c; Svergolamento: Carico all'estradosso; Curva svergolamento: b;

Dati per instabilità attorno a x

Numero rit.	Presente	Ascissa	Campata	βx/m	Vincolo a entrambi estremi	λx/m	λVer
1	Si	0					
			1-2	1	Si	32.8	Si, (<200)
2	Si	215.2					

Dati per instabilità attorno a y

Numero rit.	Presente	Ascissa	Campata	βy/n	k,LT	kw,LT	Vincolo a entrambi estremi	λy/n	λVer
1	Si	0							
			1-2	1	1	1	Si	54	Si, (<200)
2	Si	215.2							

Verifica a svergolamento SLD §4.2.4.1.3.2 NTC18

X	Comb.	Sfruttamento	Classe	Obblig.	Mx,Ed	Mb,Rd,x	χ,LT	λ adim. LT	L,LT	M,critico	Verifica
107.6	SLD 5	0.003	1	Si	-1561.1	588430.3	0.915	0.604	215.2	1851899.2	Si

Verifica di stabilità per pressoflessione §C.4.2.4.1.3.3.2 NTC18

X	Comb.	Sfruttamento	Classe	NEd	NRk	Mx,Ed max	Mx,Rk	My,Ed max	My,Rk	χ,x	χ,y	kxx	kxy	kyx	kyy	χ,LT	Verifica
0	SLV 3	0.038	1	-2784.8	106746.1	1561.1	674922.6	0	323595.1	0.935	0.772	0.955	0.368	0.997	0.614	0.915	Si

Verifica di stabilità per pressoflessione SLD §C.4.2.4.1.3.3.2 NTC18

X	Comb.	Sfruttamento	Classe	NEd	NRk	Mx,Ed max	Mx,Rk	My,Ed max	My,Rk	χ,x	χ,y	kxx	kxy	kyx	kyy	χ,LT	Verifica
0	SLD 3	0.016	1	-1021.9	106746.1	1561.1	674922.6	0	323595.1	0.935	0.772	0.952	0.363	0.999	0.605	0.915	Si

Verifica di stabilità a taglio anima Y §4.2.4.1.2.4 [4.2.27] NTC18

η	hw	tw	hw/tw max	Verifica
1.2	13.4	0.6	55.46	Si

Verifica di stabilità a taglio anima Y SLD §4.2.4.1.2.4 [4.2.27] NTC18

η	hw	tw	hw/tw max	Verifica
1.2	13.4	0.6	55.46	Si

Verifiche a deformabilità

Mensola X: No; Mensola Y: No.

Frecce lungo X

Ascissa freccia	Combinazione	Freccia	Luce	L/f	L/f,min	Tipo	Verifica
186.5	SLE RA 1	0	215.2	10000	250	Totale	Si
186.5	SLE RA 31	0	215.2	10000	250	Totale	Si
186.5	SLE RA 30	0	215.2	10000	250	Totale	Si
186.5	SLE RA 29	0	215.2	10000	250	Totale	Si
186.5	SLE RA 28	0	215.2	10000	250	Totale	Si
172.1	SLE RA 2	0	215.2	10000	350	Variabile	Si
208	SLE RA 31	0	215.2	10000	350	Variabile	Si
208	SLE RA 30	0	215.2	10000	350	Variabile	Si
208	SLE RA 29	0	215.2	10000	350	Variabile	Si
208	SLE RA 28	0	215.2	10000	350	Variabile	Si

Frecce lungo Y

Ascissa freccia	Combinazione	Freccia	Luce	L/f	L/f,min	Tipo	Verifica
107.6	SLE RA 1	-0.002	215.2	10000	250	Totale	Si
107.6	SLE RA 31	-0.002	215.2	10000	250	Totale	Si
107.6	SLE RA 30	-0.002	215.2	10000	250	Totale	Si
107.6	SLE RA 29	-0.002	215.2	10000	250	Totale	Si
107.6	SLE RA 28	-0.002	215.2	10000	250	Totale	Si
172.1	SLE RA 2	0	215.2	10000	350	Variabile	Si
200.8	SLE RA 31	0	215.2	10000	350	Variabile	Si
200.8	SLE RA 30	0	215.2	10000	350	Variabile	Si
200.8	SLE RA 29	0	215.2	10000	350	Variabile	Si
200.8	SLE RA 28	0	215.2	10000	350	Variabile	Si

Superelemento in acciaio composto dall'asta 29

Caratteristiche del materiale

Acciaio: S275, fyk = 2750

Caratteristiche geometriche

Lunghezza: 105.1
Nodo iniziale: 35 Nodo finale: 74
Cerniera iniziale: Svincolo: M2, M3 Cerniera finale: Svincolo: M2, M3
Sovraresistenza: 0% Sisma Z: No

Caratteristiche della sezione

Sezione	Rotazione	Area	Jx	Jy	ix	iy	Wx	Wy	Wplx	Wply
HEA160	0	38.82	1674.7	615.62	6.57	3.98	220.36	76.95	245.43	117.67

Verifiche di resistenza

Verifiche a forza assiale §4.2.4.1.2.1 - §4.2.4.1.2.2 NTC18

X	Comb.	Sfruttamento	Classe	NEd	Nc,Rd	Nt,Rd	Riduzione da taglio	ρx	ρy	Verifica
105.1	SLU 99	0.035		3527.3		101662.9	1	0	0	Si

Verifiche a forza assiale SLD §4.2.4.1.2.1 - §4.2.4.1.2.2 NTC18

X	Comb.	Sfruttamento	Classe	NEd	Nc,Rd	Nt,Rd	Riduzione da taglio	ρx	ρy	Verifica
105.1	SLD 13	0.008		850.4		101662.9	1	0	0	Si

Verifica a taglio Y §4.2.4.1.2.4 NTC18

X	Comb.	Sfruttamento	VEd	Vc,Rd	Av	Interazione taglio-torsione	Riduzione torsione	Verifica
0	SLU 96	0.001	18.3	20045.7	13.26	Considerata	1	Si

Verifica a taglio Y SLD §4.2.4.1.2.4 NTC18

X	Comb.	Sfruttamento	VEd	Vc,Rd	Av	Interazione taglio-torsione	Riduzione torsione	Verifica
105.1	SLD 12	0.001	-14.1	19764.6	13.26	Considerata	0.99	Si

Verifica a torsione §4.2.4.1.2.5 NTC18

X	Comb.	Sfruttamento torsione	TEd	TRd	Riduzione taglio resistente	Sfruttamento taglio-torsione	τEd,totale	τRd	Verifica
49.1	SLV 12	0.092	-1345.4	14685.6	Considerata				Si

Verifica a torsione SLD §4.2.4.1.2.5 NTC18

X	Comb.	Sfruttamento torsione	TEd	TRd	Riduzione taglio resistente	Sfruttamento taglio-torsione	τEd,totale	τRd	Verifica
49.1	SLD 12	0.035	-511.1	14685.6	Considerata				Si

Verifica a presso/tenso flessione retta X §§ 4.2.4.1.2.3 - 4.2.4.1.2.6 - 4.2.4.1.2.7 - 4.2.4.1.2.8 NTC18

Verifiche eseguite utilizzando la formula conservativa (6.2) §6.2.1 EN 1993-1-1:2005.

X	Comb.	Sfruttamento	Classe	NEd	NRd	Rid. NRd da VEd	Mx,Ed	Mx,Rd	Rid. Mx,Rd da VEd	Rid. Mx,Rd da NEd	ρx	ρy	Verifica
56.1	SLU 132	0.035	1	3518.1	101662.9	1	-479	642783	1		0	0	Si

Verifica a presso/tenso flessione retta X SLD §§ 4.2.4.1.2.3 - 4.2.4.1.2.6 - 4.2.4.1.2.7 - 4.2.4.1.2.8 NTC18

Verifiche eseguite utilizzando la formula conservativa (6.2) §6.2.1 EN 1993-1-1:2005.

X	Comb.	Sfruttamento	Classe	NEd	NRd	Rid. NRd da VEd	Mx,Ed	Mx,Rd	Rid. Mx,Rd da VEd	Rid. Mx,Rd da NEd	ρx	ρy	Verifica
56.1	SLD 14	0.009	1	843.3	101662.9	1	-369	642783	1		0	0	Si

Verifiche ad instabilità

Caratteristiche iniziali

Membratura principale per controllo snellezza; Calcolo di snellezze ed N critici condotti secondo gli assi principali;
Curva X: b; Curva Y: c; Svergolamento: Carico all'estradosso; Curva svergolamento: b;

Dati per instabilità attorno a x

Numero rit.	Presente	Ascissa	Campata	βx/m	Vincolo a entrambi estremi	λx/m	λVer
1	Si	0					
			1-2	1	Si	16	Si, (<200)
2	Si	105.1					

Dati per instabilità attorno a y

Numero rit.	Presente	Ascissa	Campata	βy/n	k,LT	kw,LT	Vincolo a entrambi estremi	λy/n	λVer
1	Si	0							
			1-2	1	1	1	Si	26.4	Si, (<200)
2	Si	105.1							

Verifica di stabilità a taglio anima Y §4.2.4.1.2.4 [4.2.27] NTC18

η	hw	tw	hw/tw max	Verifica
1.2	13.4	0.6	55.46	Si

Verifica di stabilità a taglio anima Y SLD §4.2.4.1.2.4 [4.2.27] NTC18

η	hw	tw	hw/tw max	Verifica
1.2	13.4	0.6	55.46	Si

Verifiche a deformabilità

Mensola X: No; Mensola Y: No.

Frecce lungo X

Ascissa freccia	Combinazione	Freccia	Luce	L/f	L/f,min	Tipo	Verifica
7	SLE RA 1	0	105.1	10000	250	Totale	Si
7	SLE RA 31	0	105.1	10000	250	Totale	Si
7	SLE RA 30	0	105.1	10000	250	Totale	Si
7	SLE RA 29	0	105.1	10000	250	Totale	Si
7	SLE RA 28	0	105.1	10000	250	Totale	Si
77.1	SLE RA 2	0	105.1	10000	350	Variabile	Si
10.5	SLE RA 31	0	105.1	10000	350	Variabile	Si
10.5	SLE RA 30	0	105.1	10000	350	Variabile	Si
10.5	SLE RA 29	0	105.1	10000	350	Variabile	Si
10.5	SLE RA 28	0	105.1	10000	350	Variabile	Si

Frecce lungo Y

Ascissa freccia	Combinazione	Freccia	Luce	L/f	L/f,min	Tipo	Verifica
52.6	SLE RA 1	0	105.1	10000	250	Totale	Si
52.6	SLE RA 31	0	105.1	10000	250	Totale	Si
52.6	SLE RA 30	0	105.1	10000	250	Totale	Si
52.6	SLE RA 29	0	105.1	10000	250	Totale	Si
52.6	SLE RA 28	0	105.1	10000	250	Totale	Si
3.5	SLE RA 2	0	105.1	10000	350	Variabile	Si
14	SLE RA 31	0	105.1	10000	350	Variabile	Si
14	SLE RA 30	0	105.1	10000	350	Variabile	Si
14	SLE RA 29	0	105.1	10000	350	Variabile	Si
14	SLE RA 28	0	105.1	10000	350	Variabile	Si

Superelemento in acciaio composto dall'asta 30

Caratteristiche del materiale

Acciaio: S275, fyk = 2750

Caratteristiche geometriche

Lunghezza: 105.1
Nodo iniziale: 34 Nodo finale: 73
Cerniera iniziale: Svincolo: M2, M3 Cerniera finale: Svincolo: M2, M3
Sovraresistenza: 0% Sisma Z: No

Caratteristiche della sezione

Sezione	Rotazione	Area	Jx	Jy	ix	iy	Wx	Wy	Wplx	Wply
HEA160	0	38.82	1674.7	615.62	6.57	3.98	220.36	76.95	245.43	117.67

Verifiche di resistenza

Verifiche a forza assiale §4.2.4.1.2.1 - §4.2.4.1.2.2 NTC18

X	Comb.	Sfruttamento	Classe	NEd	Nc,Rd	Nt,Rd	Riduzione da taglio	ρx	ρy	Verifica
105.1	SLU 132	0.035		3525.4		101662.9	1	0	0	Si

Verifiche a forza assiale SLD §4.2.4.1.2.1 - §4.2.4.1.2.2 NTC18

X	Comb.	Sfruttamento	Classe	NEd	Nc,Rd	Nt,Rd	Riduzione da taglio	ρx	ρy	Verifica
105.1	SLD 2	0.008		850.4		101662.9	1	0	0	Si

Verifica a taglio Y §4.2.4.1.2.4 NTC18

X	Comb.	Sfruttamento	VEd	Vc,Rd	Av	Interazione taglio-torsione	Riduzione torsione	Verifica
0	SLU 98	0.001	18.3	20045.7	13.26	Considerata	1	Si

Verifica a taglio Y SLD §4.2.4.1.2.4 NTC18

X	Comb.	Sfruttamento	VEd	Vc,Rd	Av	Interazione taglio-torsione	Riduzione torsione	Verifica
105.1	SLD 8	0.001	-14.1	19764.6	13.26	Considerata	0.99	Si

Verifica a torsione §4.2.4.1.2.5 NTC18

X	Comb.	Sfruttamento torsione	TEd	TRd	Riduzione taglio resistente	Sfruttamento taglio-torsione	τEd,totale	τRd	Verifica
105.1	SLV 8	0.092	1345.4	14685.6	Considerata				Si

Verifica a torsione SLD §4.2.4.1.2.5 NTC18

X	Comb.	Sfruttamento torsione	TEd	TRd	Riduzione taglio resistente	Sfruttamento taglio-torsione	τEd,totale	τRd	Verifica
105.1	SLD 8	0.035	511.1	14685.6	Considerata				Si

Verifica a presso/tenso flessione retta X §§ 4.2.4.1.2.3 - 4.2.4.1.2.6 - 4.2.4.1.2.7 - 4.2.4.1.2.8 NTC18

Verifiche eseguite utilizzando la formula conservativa (6.2) §6.2.1 EN 1993-1-1:2005.

X	Comb.	Sfruttamento	Classe	NEd	NRd	Rid. NRd da VEd	Mx,Ed	Mx,Rd	Rid. Mx,Rd da VEd	Rid. Mx,Rd da NEd	ρx	ρy	Verifica
56.1	SLU 132	0.035	1	3516.2	101662.9	1	-479	642783	1		0	0	Si

Verifica a presso/tenso flessione retta X SLD §§ 4.2.4.1.2.3 - 4.2.4.1.2.6 - 4.2.4.1.2.7 - 4.2.4.1.2.8 NTC18

Verifiche eseguite utilizzando la formula conservativa (6.2) §6.2.1 EN 1993-1-1:2005.

X	Comb.	Sfruttamento	Classe	NEd	NRd	Rid. NRd da VEd	Mx,Ed	Mx,Rd	Rid. Mx,Rd da VEd	Rid. Mx,Rd da NEd	ρx	ρy	Verifica
56.1	SLD 2	0.009	1	843.3	101662.9	1	-369	642783	1		0	0	Si

Verifiche ad instabilità

Caratteristiche iniziali

Membratura principale per controllo snellezza; Calcolo di snellezze ed N critici condotti secondo gli assi principali;
Curva X: b; Curva Y: c; Svergolamento: Carico all'estradosso; Curva svergolamento: b;

Dati per instabilità attorno a x

Numero rit.	Presente	Ascissa	Campata	βx/m	Vincolo a entrambi estremi	λx/m	λVer
1	Si	0					
			1-2	1	Si	16	Si, (<200)
2	Si	105.1					

Dati per instabilità attorno a y

Numero rit.	Presente	Ascissa	Campata	βy/n	k,LT	kw,LT	Vincolo a entrambi estremi	λy/n	λVer
1	Si	0							
			1-2	1	1	1	Si	26.4	Si, (<200)
2	Si	105.1							

Verifica di stabilità a taglio anima Y §4.2.4.1.2.4 [4.2.27] NTC18

η	hw	tw	hw/tw max	Verifica
1.2	13.4	0.6	55.46	Si

Verifica di stabilità a taglio anima Y SLD §4.2.4.1.2.4 [4.2.27] NTC18

η	hw	tw	hw/tw max	Verifica
1.2	13.4	0.6	55.46	Si

Verifiche a deformabilità

Mensola X: No; Mensola Y: No.

Frecce lungo X

Ascissa freccia	Combinazione	Freccia	Luce	L/f	L/f,min	Tipo	Verifica
7	SLE RA 1	0	105.1	10000	250	Totale	Si
7	SLE RA 31	0	105.1	10000	250	Totale	Si
7	SLE RA 30	0	105.1	10000	250	Totale	Si
7	SLE RA 29	0	105.1	10000	250	Totale	Si
7	SLE RA 28	0	105.1	10000	250	Totale	Si
70.1	SLE RA 2	0	105.1	10000	350	Variabile	Si
91.1	SLE RA 31	0	105.1	10000	350	Variabile	Si
91.1	SLE RA 30	0	105.1	10000	350	Variabile	Si
91.1	SLE RA 29	0	105.1	10000	350	Variabile	Si
91.1	SLE RA 28	0	105.1	10000	350	Variabile	Si

Frecce lungo Y

Ascissa freccia	Combinazione	Freccia	Luce	L/f	L/f,min	Tipo	Verifica
52.6	SLE RA 1	0	105.1	10000	250	Totale	Si
52.6	SLE RA 31	0	105.1	10000	250	Totale	Si
52.6	SLE RA 30	0	105.1	10000	250	Totale	Si
52.6	SLE RA 29	0	105.1	10000	250	Totale	Si
52.6	SLE RA 28	0	105.1	10000	250	Totale	Si
3.5	SLE RA 2	0	105.1	10000	350	Variabile	Si
17.5	SLE RA 31	0	105.1	10000	350	Variabile	Si
17.5	SLE RA 30	0	105.1	10000	350	Variabile	Si
17.5	SLE RA 29	0	105.1	10000	350	Variabile	Si
17.5	SLE RA 28	0	105.1	10000	350	Variabile	Si

Superelemento in acciaio composto dall'asta 31

Caratteristiche del materiale

Acciaio: S275, fyk = 2750

Caratteristiche geometriche

Lunghezza: 108.7
Nodo iniziale: 4 Nodo finale: 29
Cerniera iniziale: No Cerniera finale: No
Sovraresistenza: 0% Sisma Z: No

Caratteristiche della sezione

Sezione	Rotazione	Area	Jx	Jy	ix	iy	Wx	Wy	Wplx	Wply
HEA180	0	45.3	2512.55	924.65	7.45	4.52	293.87	102.74	325.17	156.53

Verifiche di resistenza

Verifiche a forza assiale §4.2.4.1.2.1 - §4.2.4.1.2.2 NTC18

X	Comb.	Sfruttamento	Classe	NEd	Nc,Rd	Nt,Rd	Riduzione da taglio	ρx	ρy	Verifica
0	SLU 99	0.324	1	-38458.5	118634.3		1	0	0	Si

Verifiche a forza assiale SLD §4.2.4.1.2.1 - §4.2.4.1.2.2 NTC18

X	Comb.	Sfruttamento	Classe	NEd	Nc,Rd	Nt,Rd	Riduzione da taglio	ρx	ρy	Verifica
0	SLD 15	0.147	1	-17487.8	118634.3		1	0	0	Si

Verifica a taglio X §4.2.4.1.2.4 NTC18

X	Comb.	Sfruttamento	VEd	Vc,Rd	Av	Interazione taglio-torsione	Riduzione torsione	Verifica
0	SLV 11	0.002	-119.8	54121	36.18	Considerata	0.99	Si

Verifica a taglio X SLD §4.2.4.1.2.4 NTC18

X	Comb.	Sfruttamento	VEd	Vc,Rd	Av	Interazione taglio-torsione	Riduzione torsione	Verifica
108.7	SLD 12	0.001	-45.7	54482.8	36.18	Considerata	1	Si

Verifica a taglio Y §4.2.4.1.2.4 NTC18

X	Comb.	Sfruttamento	VEd	Vc,Rd	Av	Interazione taglio-torsione	Riduzione torsione	Verifica
108.7	SLU 96	0.094	-2057.6	21950.9	14.52	Considerata	1	Si

Verifica a taglio Y SLD §4.2.4.1.2.4 NTC18

X	Comb.	Sfruttamento	VEd	Vc,Rd	Av	Interazione taglio-torsione	Riduzione torsione	Verifica
108.7	SLD 3	0.071	-1556.3	21924.1	14.52	Considerata	1	Si

Verifica a torsione §4.2.4.1.2.5 NTC18

X	Comb.	Sfruttamento torsione	TEd	TRd	Riduzione taglio resistente	Sfruttamento taglio-torsione	τEd,totale	τRd	Verifica
108.7	SLV 8	0.026	479.6	18118.1	Considerata				Si

Verifica a torsione SLD §4.2.4.1.2.5 NTC18

X	Comb.	Sfruttamento torsione	TEd	TRd	Riduzione taglio resistente	Sfruttamento taglio-torsione	τEd,totale	τRd	Verifica
108.7	SLD 8	0.01	182.1	18118.1	Considerata				Si

Verifica a presso/tenso flessione retta X §§ 4.2.4.1.2.3 - 4.2.4.1.2.6 - 4.2.4.1.2.7 - 4.2.4.1.2.8 NTC18

Verifiche eseguite utilizzando la formula conservativa (6.2) §6.2.1 EN 1993-1-1:2005.

X	Comb.	Sfruttamento	Classe	NEd	NRd	Rid. NRd da VEd	Mx,Ed	Mx,Rd	Rid. Mx,Rd da VEd	Rid. Mx,Rd da NEd	ρx	ρy	Verifica
21.7	SLU 132	0.333	1	-36948.3	118634.3	1	-18057	851642	1		0	0	Si

Verifica a presso/tenso flessione retta X SLD §§ 4.2.4.1.2.3 - 4.2.4.1.2.6 - 4.2.4.1.2.7 - 4.2.4.1.2.8 NTC18

Verifiche eseguite utilizzando la formula conservativa (6.2) §6.2.1 EN 1993-1-1:2005.

X	Comb.	Sfruttamento	Classe	NEd	NRd	Rid. NRd da VEd	Mx,Ed	Mx,Rd	Rid. Mx,Rd da VEd	Rid. Mx,Rd da NEd	ρx	ρy	Verifica
10.9	SLD 16	0.154	1	-16907	118634.3	1	-9798	851642	1		0	0	Si

Verifica a presso/tenso flessione retta Y §§ 4.2.4.1.2.3 - 4.2.4.1.2.6 - 4.2.4.1.2.7 - 4.2.4.1.2.8 NTC18

Verifiche eseguite utilizzando la formula conservativa (6.2) §6.2.1 EN 1993-1-1:2005.

X	Comb.	Sfruttamento	Classe	NEd	NRd	Rid. NRd da VEd	My,Ed	My,Rd	Rid. My,Rd da VEd	Rid. My,Rd da NEd	ρx	ρy	Verifica
0	SLV 11	0.148	1	-17467.6	118634.3	1	473	409967	1		0	0	Si

Verifica a presso/tenso flessione retta Y SLD §§ 4.2.4.1.2.3 - 4.2.4.1.2.6 - 4.2.4.1.2.7 - 4.2.4.1.2.8 NTC18

Verifiche eseguite utilizzando la formula conservativa (6.2) §6.2.1 EN 1993-1-1:2005.

X	Comb.	Sfruttamento	Classe	NEd	NRd	Rid. NRd da VEd	My,Ed	My,Rd	Rid. My,Rd da VEd	Rid. My,Rd da NEd	ρx	ρy	Verifica
0	SLD 11	0.147	1	-17445.5	118634.3	1	180	409967	1		0	0	Si

Verifica a presso/tenso flessione deviata §§ 4.2.4.1.2.3 - 4.2.4.1.2.6 - 4.2.4.1.2.7 - 4.2.4.1.2.8 NTC18

Verifiche eseguite utilizzando la formula conservativa (6.2) §6.2.1 EN 1993-1-1:2005.

X	Comb.	Sfruttamento	Classe	NEd	NRd	Rid. NRd da VEd	Mx,Ed	Mx,Rd	My,Ed	My,Rd	Rid. Mx,Rd da VEd	Rid. Mx,Rd da NEd	Rid. My,Rd da VEd	Rid. My,Rd da NEd	α	β	ρx	ρy	Verifica
108.7	SLV 8	0.167	1	-11578.5	118634.3	1	32942	851642	-12544	409967	1		1				0	0	Si

Verifica a presso/tenso flessione deviata SLD §§ 4.2.4.1.2.3 - 4.2.4.1.2.6 - 4.2.4.1.2.7 - 4.2.4.1.2.8 NTC18

Verifiche eseguite utilizzando la formula conservativa (6.2) §6.2.1 EN 1993-1-1:2005.

X	Comb.	Sfruttamento	Classe	NEd	NRd	Rid. NRd da VEd	Mx,Ed	Mx,Rd	My,Ed	My,Rd	Rid. Mx,Rd da VEd	Rid. Mx,Rd da NEd	Rid. My,Rd da VEd	Rid. My,Rd da NEd	α	β	ρx	ρy	Verifica
29	SLD 12	0.159	1	-15896.5	118634.3	1	-19038	851642	-1143	409967	1		1				0	0	Si

Verifiche ad instabilità

Caratteristiche iniziali

Membratura principale per controllo snellezza; Calcolo di snellezze ed N critici condotti secondo gli assi principali;
Curva X: b; Curva Y: c; Svergolamento: Carico all'estradosso; Curva svergolamento: b;

Dati per instabilità attorno a x

Numero rit.	Presente	Ascissa	Campata	βx/m	Vincolo a entrambi estremi	λx/m	λVer
1	Si	0					
			1-2	1	Si	14.6	Si, (<200)
2	Si	108.7					

Dati per instabilità attorno a y

Numero rit.	Presente	Ascissa	Campata	βy/n	k,LT	kw,LT	Vincolo a entrambi estremi	λy/n	λVer
1	Si	0							
			1-2	1	1	1	Si	24	Si, (<200)

Numero rit.	Presente	Ascissa	Campata	βy/n	k,LT	kw,LT	Vincolo a entrambi estremi	λy/n	λVer
2	Si	108.7							

Verifica di stabilità per pressoflessione §C.4.2.4.1.3.3.2 NTC18

X	Comb.	Sfruttamento	Classe	NEd	NRk	Mx,Ed max	Mx,Rk	My,Ed max	My,Rk	χ,x	χ,y	kxx	kxy	kyx	kyy	χ,LT	Verifica
0	SLU 98	0.388	1	-38458.5	124566	49212.5	894223.7	68.6	430465.2	1	0.961	0.404	0.348	0.877	0.58	1	Si

Verifica di stabilità per pressoflessione SLD §C.4.2.4.1.3.3.2 NTC18

X	Comb.	Sfruttamento	Classe	NEd	NRk	Mx,Ed max	Mx,Rk	My,Ed max	My,Rk	χ,x	χ,y	kxx	kxy	kyx	kyy	χ,LT	Verifica
0	SLD 7	0.191	1	-17409.2	124566	30646.3	894223.7	4780.8	430465.2	1	0.961	0.572	0.348	0.877	0.581	1	Si

Verifica di stabilità a taglio anima Y §4.2.4.1.2.4 [4.2.27] NTC18

η	hw	tw	hw/tw max	Verifica
1.2	15.2	0.6	55.46	Si

Verifica di stabilità a taglio anima Y SLD §4.2.4.1.2.4 [4.2.27] NTC18

η	hw	tw	hw/tw max	Verifica
1.2	15.2	0.6	55.46	Si

Verifiche a deformabilità

Mensola X: No; Mensola Y: No.

Frecce lungo X

Ascissa freccia	Combinazione	Freccia	Luce	L/f	L/f,min	Tipo	Verifica
61.6	SLE RA 1	0	108.7	10000	250	Totale	Si
61.6	SLE RA 31	0	108.7	10000	250	Totale	Si
61.6	SLE RA 30	0	108.7	10000	250	Totale	Si
61.6	SLE RA 29	0	108.7	10000	250	Totale	Si
61.6	SLE RA 28	0	108.7	10000	250	Totale	Si
61.6	SLE RA 2	0	108.7	10000	350	Variabile	Si
61.6	SLE RA 31	0	108.7	10000	350	Variabile	Si
61.6	SLE RA 30	0	108.7	10000	350	Variabile	Si
61.6	SLE RA 29	0	108.7	10000	350	Variabile	Si
61.6	SLE RA 28	0	108.7	10000	350	Variabile	Si

Frecce lungo Y

Ascissa freccia	Combinazione	Freccia	Luce	L/f	L/f,min	Tipo	Verifica
50.7	SLE RA 1	-0.008	108.7	10000	250	Totale	Si
50.7	SLE RA 31	-0.007	108.7	10000	250	Totale	Si
50.7	SLE RA 30	-0.007	108.7	10000	250	Totale	Si
50.7	SLE RA 29	-0.007	108.7	10000	250	Totale	Si
50.7	SLE RA 28	-0.007	108.7	10000	250	Totale	Si
61.6	SLE RA 2	0	108.7	10000	350	Variabile	Si
61.6	SLE RA 31	0.001	108.7	10000	350	Variabile	Si
61.6	SLE RA 30	0.001	108.7	10000	350	Variabile	Si
61.6	SLE RA 29	0.001	108.7	10000	350	Variabile	Si
61.6	SLE RA 28	0.001	108.7	10000	350	Variabile	Si

Superelemento in acciaio composto dall'asta 32

Caratteristiche del materiale

Acciaio: S275, fyk = 2750

Caratteristiche geometriche

Lunghezza: 108.7
Nodo iniziale: 5 Nodo finale: 32
Cerniera iniziale: No Cerniera finale: No
Sovraresistenza: 0% Sisma Z: No

Caratteristiche della sezione

Sezione	Rotazione	Area	Jx	Jy	ix	iy	Wx	Wy	Wplx	Wply
HEA180	0	45.3	2512.55	924.65	7.45	4.52	293.87	102.74	325.17	156.53

Verifiche di resistenza

Verifiche a forza assiale §4.2.4.1.2.1 - §4.2.4.1.2.2 NTC18

X	Comb.	Sfruttamento	Classe	NEd	Nc,Rd	Nt,Rd	Riduzione da taglio	ρx	ρy	Verifica
0	SLU 132	0.324	1	-38432.2	118634.3		1	0	0	Si

Verifiche a forza assiale SLD §4.2.4.1.2.1 - §4.2.4.1.2.2 NTC18

X	Comb.	Sfruttamento	Classe	NEd	Nc,Rd	Nt,Rd	Riduzione da taglio	ρx	ρy	Verifica
0	SLD 4	0.147	1	-17487.8	118634.3		1	0	0	Si

Verifica a taglio X §4.2.4.1.2.4 NTC18

X	Comb.	Sfruttamento	VEd	Vc,Rd	Av	Interazione taglio-torsione	Riduzione torsione	Verifica
108.7	SLV 7	0.002	119.8	54121	36.18	Considerata	0.99	Si

Verifica a taglio X SLD §4.2.4.1.2.4 NTC18

X	Comb.	Sfruttamento	VEd	Vc,Rd	Av	Interazione taglio-torsione	Riduzione torsione	Verifica
108.7	SLD 8	0.001	45.7	54482.8	36.18	Considerata	1	Si

Verifica a taglio Y §4.2.4.1.2.4 NTC18

X	Comb.	Sfruttamento	VEd	Vc,Rd	Av	Interazione taglio-torsione	Riduzione torsione	Verifica
108.7	SLU 129	0.094	-2058.3	21950.9	14.52	Considerata	1	Si

Verifica a taglio Y SLD §4.2.4.1.2.4 NTC18

X	Comb.	Sfruttamento	VEd	Vc,Rd	Av	Interazione taglio-torsione	Riduzione torsione	Verifica
108.7	SLD 16	0.071	-1556.3	21924.1	14.52	Considerata	1	Si

Verifica a torsione §4.2.4.1.2.5 NTC18

X	Comb.	Sfruttamento torsione	TEd	TRd	Riduzione taglio resistente	Sfruttamento taglio-torsione	τEd,totale	τRd	Verifica
50.7	SLV 12	0.026	-479.6	18118.1	Considerata				Si

Verifica a torsione SLD §4.2.4.1.2.5 NTC18

X	Comb.	Sfruttamento torsione	TEd	TRd	Riduzione taglio resistente	Sfruttamento taglio-torsione	τEd,totale	τRd	Verifica
50.7	SLD 12	0.01	-182.1	18118.1	Considerata				Si

Verifica a presso/tenso flessione retta X §§ 4.2.4.1.2.3 - 4.2.4.1.2.6 - 4.2.4.1.2.7 - 4.2.4.1.2.8 NTC18

Verifiche eseguite utilizzando la formula conservativa (6.2) §6.2.1 EN 1993-1-1:2005.

X	Comb.	Sfruttamento	Classe	NEd	NRd	Rid. NRd da VEd	Mx,Ed	Mx,Rd	Rid. Mx,Rd da VEd	Rid. Mx,Rd da NEd	ρx	ρy	Verifica
21.7	SLU 132	0.332	1	-36921.9	118634.3	1	-18042	851642	1		0	0	Si

Verifica a presso/tenso flessione retta X SLD §§ 4.2.4.1.2.3 - 4.2.4.1.2.6 - 4.2.4.1.2.7 - 4.2.4.1.2.8 NTC18

Verifiche eseguite utilizzando la formula conservativa (6.2) §6.2.1 EN 1993-1-1:2005.

X	Comb.	Sfruttamento	Classe	NEd	NRd	Rid. NRd da VEd	Mx,Ed	Mx,Rd	Rid. Mx,Rd da VEd	Rid. Mx,Rd da NEd	ρx	ρy	Verifica
10.9	SLD 3	0.154	1	-16907	118634.3	1	-9798	851642	1		0	0	Si

Verifica a presso/tenso flessione retta Y §§ 4.2.4.1.2.3 - 4.2.4.1.2.6 - 4.2.4.1.2.7 - 4.2.4.1.2.8 NTC18

Verifiche eseguite utilizzando la formula conservativa (6.2) §6.2.1 EN 1993-1-1:2005.

X	Comb.	Sfruttamento	Classe	NEd	NRd	Rid. NRd da VEd	My,Ed	My,Rd	Rid. My,Rd da VEd	Rid. My,Rd da NEd	ρx	ρy	Verifica
0	SLV 7	0.148	1	-17467.6	118634.3	1	-473	409967	1		0	0	Si

Verifica a presso/tenso flessione retta Y SLD §§ 4.2.4.1.2.3 - 4.2.4.1.2.6 - 4.2.4.1.2.7 - 4.2.4.1.2.8 NTC18

Verifiche eseguite utilizzando la formula conservativa (6.2) §6.2.1 EN 1993-1-1:2005.

X	Comb.	Sfruttamento	Classe	NEd	NRd	Rid. NRd da VEd	My,Ed	My,Rd	Rid. My,Rd da VEd	Rid. My,Rd da NEd	ρx	ρy	Verifica
0	SLD 7	0.147	1	-17445.5	118634.3	1	-180	409967	1		0	0	Si

Verifica a presso/tenso flessione deviata §§ 4.2.4.1.2.3 - 4.2.4.1.2.6 - 4.2.4.1.2.7 - 4.2.4.1.2.8 NTC18

Verifiche eseguite utilizzando la formula conservativa (6.2) §6.2.1 EN 1993-1-1:2005.

X	Comb.	Sfruttamento	Classe	NEd	NRd	Rid. NRd da VEd	Mx,Ed	Mx,Rd	My,Ed	My,Rd	Rid. Mx,Rd da VEd	Rid. Mx,Rd da NEd	Rid. My,Rd da VEd	Rid. My,Rd da NEd	α	β	ρx	ρy	Verifica
108.7	SLV 12	0.167	1	-11578.5	118634.3	1	32942	851642	12544	409967	1		1				0	0	Si

Verifica a presso/tenso flessione deviata SLD §§ 4.2.4.1.2.3 - 4.2.4.1.2.6 - 4.2.4.1.2.7 - 4.2.4.1.2.8 NTC18

Verifiche eseguite utilizzando la formula conservativa (6.2) §6.2.1 EN 1993-1-1:2005.

X	Comb.	Sfruttamento	Classe	NEd	NRd	Rid. NRd da VEd	Mx,Ed	Mx,Rd	My,Ed	My,Rd	Rid. Mx,Rd da VEd	Rid. Mx,Rd da NEd	Rid. My,Rd da VEd	Rid. My,Rd da NEd	α	β	ρx	ρy	Verifica
29	SLD 7	0.159	1	-15896.5	118634.3	1	-19038	851642	1143	409967	1		1				0	0	Si

Verifiche ad instabilità

Caratteristiche iniziali

Membratura principale per controllo snellezza; Calcolo di snellezze ed N critici condotti secondo gli assi principali;
Curva X: b; Curva Y: c; Svergolamento: Carico all'estradosso; Curva svergolamento: b;

Dati per instabilità attorno a x

Numero rit.	Presente	Ascissa	Campata	βx/m	Vincolo a entrambi estremi	λx/m	λVer
1	Si	0					
			1-2	1	Si	14.6	Si, (<200)
2	Si	108.7					

Dati per instabilità attorno a y

Numero rit.	Presente	Ascissa	Campata	βy/n	k,LT	kw,LT	Vincolo a entrambi estremi	λy/n	λVer
1	Si	0							
			1-2	1	1	1	Si	24	Si, (<200)
2	Si	108.7							

Verifica di stabilità per pressoflessione §C.4.2.4.1.3.3.2 NTC18

X	Comb.	Sfruttamento	Classe	NEd	NRk	Mx,Ed max	Mx,Rk	My,Ed max	My,Rk	χ,x	χ,y	kxx	kxy	kyx	kyy	χ,LT	Verifica
0	SLU 98	0.388	1	-38432.2	124566	49289	894223.7	68.5	430465.2	1	0.961	0.403	0.348	0.877	0.58	1	Si

Verifica di stabilità per pressoflessione SLD §C.4.2.4.1.3.3.2 NTC18

X	Comb.	Sfruttamento	Classe	NEd	NRk	Mx,Ed max	Mx,Rk	My,Ed max	My,Rk	χ,x	χ,y	kxx	kxy	kyx	kyy	χ,LT	Verifica
0	SLD 12	0.191	1	-17409.2	124566	30646.3	894223.7	4780.8	430465.2	1	0.961	0.572	0.348	0.877	0.581	1	Si

Verifica di stabilità a taglio anima Y §4.2.4.1.2.4 [4.2.27] NTC18

η	hw	tw	hw/tw max	Verifica
1.2	15.2	0.6	55.46	Si

Verifica di stabilità a taglio anima Y SLD §4.2.4.1.2.4 [4.2.27] NTC18

η	hw	tw	hw/tw max	Verifica
1.2	15.2	0.6	55.46	Si

Verifiche a deformabilità

Mensola X: No; Mensola Y: No.

Frecce lungo X

Ascissa freccia	Combinazione	Freccia	Luce	L/f	L/f,min	Tipo	Verifica
61.6	SLE RA 1	0	108.7	10000	250	Totale	Si
61.6	SLE RA 31	0	108.7	10000	250	Totale	Si
61.6	SLE RA 30	0	108.7	10000	250	Totale	Si
61.6	SLE RA 29	0	108.7	10000	250	Totale	Si
61.6	SLE RA 28	0	108.7	10000	250	Totale	Si
61.6	SLE RA 2	0	108.7	10000	350	Variabile	Si
61.6	SLE RA 31	0	108.7	10000	350	Variabile	Si
61.6	SLE RA 30	0	108.7	10000	350	Variabile	Si
61.6	SLE RA 29	0	108.7	10000	350	Variabile	Si
61.6	SLE RA 28	0	108.7	10000	350	Variabile	Si

Frecce lungo Y

Ascissa freccia	Combinazione	Freccia	Luce	L/f	L/f,min	Tipo	Verifica
50.7	SLE RA 1	-0.008	108.7	10000	250	Totale	Si
50.7	SLE RA 31	-0.007	108.7	10000	250	Totale	Si
50.7	SLE RA 30	-0.007	108.7	10000	250	Totale	Si
50.7	SLE RA 29	-0.007	108.7	10000	250	Totale	Si
50.7	SLE RA 28	-0.007	108.7	10000	250	Totale	Si
61.6	SLE RA 2	0	108.7	10000	350	Variabile	Si
61.6	SLE RA 31	0.001	108.7	10000	350	Variabile	Si
61.6	SLE RA 30	0.001	108.7	10000	350	Variabile	Si
61.6	SLE RA 29	0.001	108.7	10000	350	Variabile	Si
61.6	SLE RA 28	0.001	108.7	10000	350	Variabile	Si

Superelemento in acciaio composto dall'asta 33

Caratteristiche del materiale

Acciaio: S275, fyk = 2750

Caratteristiche geometriche

Lunghezza: 74.7
Nodo iniziale: 29 Nodo finale: 71
Cerniera iniziale: No Cerniera finale: No
Sovraresistenza: 0% Sisma Z: No

Caratteristiche della sezione

Sezione	Rotazione	Area	Jx	Jy	ix	iy	Wx	Wy	Wplx	Wply
HEA180	0	45.3	2512.55	924.65	7.45	4.52	293.87	102.74	325.17	156.53

Verifiche di resistenza

Verifiche a forza assiale §4.2.4.1.2.1 - §4.2.4.1.2.2 NTC18

X	Comb.	Sfruttamento	Classe	NEd	Nc,Rd	Nt,Rd	Riduzione da taglio	ρx	ρy	Verifica
0	SLU 129	0.426	1	-50504.7	118634.3		1	0	0	Si

Verifiche a forza assiale SLD §4.2.4.1.2.1 - §4.2.4.1.2.2 NTC18

X	Comb.	Sfruttamento	Classe	NEd	Nc,Rd	Nt,Rd	Riduzione da taglio	ρx	ρy	Verifica
0	SLD 1	0.156	1	-18478.8	118634.3		1	0	0	Si

Verifica a taglio X §4.2.4.1.2.4 NTC18

X	Comb.	Sfruttamento	VEd	Vc,Rd	Av	Interazione taglio-torsione	Riduzione torsione	Verifica
34.9	SLV 12	0.004	201.8	49131.9	36.18	Considerata	0.9	Si

Verifica a taglio X SLD §4.2.4.1.2.4 NTC18

X	Comb.	Sfruttamento	VEd	Vc,Rd	Av	Interazione taglio-torsione	Riduzione torsione	Verifica
74.7	SLD 12	0.001	77.4	52647.8	36.18	Considerata	0.96	Si

Verifica a taglio Y §4.2.4.1.2.4 NTC18

X	Comb.	Sfruttamento	VEd	Vc,Rd	Av	Interazione taglio-torsione	Riduzione torsione	Verifica
74.7	SLU 132	0.323	-7078.8	21937.2	14.52	Considerata	1	Si

Verifica a taglio Y SLD §4.2.4.1.2.4 NTC18

X	Comb.	Sfruttamento	VEd	Vc,Rd	Av	Interazione taglio-torsione	Riduzione torsione	Verifica
74.7	SLD 4	0.15	-3251.1	21701.3	14.52	Considerata	0.99	Si

Verifica a torsione §4.2.4.1.2.5 NTC18

X	Comb.	Sfruttamento torsione	TEd	TRd	Riduzione taglio resistente	Sfruttamento taglio-torsione	τEd,totale	τRd	Verifica
72.2	SLV 12	0.242	-4378.1	18118.1	Considerata				Si

Verifica a torsione SLD §4.2.4.1.2.5 NTC18

X	Comb.	Sfruttamento torsione	TEd	TRd	Riduzione taglio resistente	Sfruttamento taglio-torsione	τEd,totale	τRd	Verifica
34.9	SLD 12	0.092	-1669.9	18118.1	Considerata				Si

Verifica a presso/tenso flessione retta X §§ 4.2.4.1.2.3 - 4.2.4.1.2.6 - 4.2.4.1.2.7 - 4.2.4.1.2.8 NTC18

Verifiche eseguite utilizzando la formula conservativa (6.2) §6.2.1 EN 1993-1-1:2005.

X	Comb.	Sfruttamento	Classe	NEd	NRd	Rid. NRd da VEd	Mx,Ed	Mx,Rd	Rid. Mx,Rd da VEd	Rid. Mx,Rd da NEd	ρx	ρy	Verifica
67.2	SLU 132	0.832	1	-47106.7	118634.3	1	370119	851642	1		0	0	Si

Verifica a presso/tenso flessione retta X SLD §§ 4.2.4.1.2.3 - 4.2.4.1.2.6 - 4.2.4.1.2.7 - 4.2.4.1.2.8 NTC18

Verifiche eseguite utilizzando la formula conservativa (6.2) §6.2.1 EN 1993-1-1:2005.

X	Comb.	Sfruttamento	Classe	NEd	NRd	Rid. NRd da VEd	Mx,Ed	Mx,Rd	Rid. Mx,Rd da VEd	Rid. Mx,Rd da NEd	ρx	ρy	Verifica
62.3	SLD 1	0.277	1	-16058.6	118634.3	1	120291	851642	1		0	0	Si

Verifica a presso/tenso flessione retta Y §§ 4.2.4.1.2.3 - 4.2.4.1.2.6 - 4.2.4.1.2.7 - 4.2.4.1.2.8 NTC18

Verifiche eseguite utilizzando la formula conservativa (6.2) §6.2.1 EN 1993-1-1:2005.

X	Comb.	Sfruttamento	Classe	NEd	NRd	Rid. NRd da VEd	My,Ed	My,Rd	Rid. My,Rd da VEd	Rid. My,Rd da NEd	ρx	ρy	Verifica
19.9	SLV 15	0.132	1	-15048.7	118634.3	1	-2184	409967	1		0	0	Si

Verifica a presso/tenso flessione deviata §§ 4.2.4.1.2.3 - 4.2.4.1.2.6 - 4.2.4.1.2.7 - 4.2.4.1.2.8 NTC18

Verifiche eseguite utilizzando la formula conservativa (6.2) §6.2.1 EN 1993-1-1:2005.

X	Comb.	Sfruttamento	Classe	NEd	NRd	Rid. NRd da VEd	Mx,Ed	Mx,Rd	My,Ed	My,Rd	Rid. Mx,Rd da VEd	Rid. Mx,Rd da NEd	Rid. My,Rd da VEd	Rid. My,Rd da NEd	α	β	ρx	ρy	Verifica
74.7	SLU 132	0.889	1	-46729.1	118634.3	1	421434	851642	119	409967	1		1				0	0	Si

Verifica a presso/tenso flessione deviata SLD §§ 4.2.4.1.2.3 - 4.2.4.1.2.6 - 4.2.4.1.2.7 - 4.2.4.1.2.8 NTC18

Verifiche eseguite utilizzando la formula conservativa (6.2) §6.2.1 EN 1993-1-1:2005.

X	Comb.	Sfruttamento	Classe	NEd	NRd	Rid. NRd da VEd	Mx,Ed	Mx,Rd	My,Ed	My,Rd	Rid. Mx,Rd da VEd	Rid. Mx,Rd da NEd	Rid. My,Rd da VEd	Rid. My,Rd da NEd	α	β	ρx	ρy	Verifica
74.7	SLD 4	0.317	1	-15574.5	118634.3	1	157423	851642	493	409967	1		1				0	0	Si

Verifiche ad instabilità

Caratteristiche iniziali

Membratura principale per controllo snellezza; Calcolo di snellezze ed N critici condotti secondo gli assi principali;
Curva X: b; Curva Y: c; Svergolamento: Carico all'estradosso; Curva svergolamento: b;

Dati per instabilità attorno a x

Numero rit.	Presente	Ascissa	Campata	βx/m	Vincolo a entrambi estremi	λx/m	λVer
1	Si	0					
			1-2	1	Si	10	Si, (<200)
2	Si	74.7					

Dati per instabilità attorno a y

Numero rit.	Presente	Ascissa	Campata	βy/n	k,LT	kw,LT	Vincolo a entrambi estremi	λy/n	λVer
1	Si	0							
			1-2	1	1	1	Si	16.5	Si, (<200)
2	Si	74.7							

Verifica di stabilità per pressoflessione §C.4.2.4.1.3.3.2 NTC18

X	Comb.	Sfruttamento	Classe	NEd	NRk	Mx,Ed max	Mx,Rk	My,Ed max	My,Rk	χ,x	χ,y	kxx	kxy	kyx	kyy	χ,LT	Verifica
0	SLU 132	0.817	1	-50504.7	124566	421433.8	894223.7	119	430465.2	1	1	0.552	0.218	0.79	0.363	1	Si

Verifica di stabilità per pressoflessione SLD §C.4.2.4.1.3.3.2 NTC18

X	Comb.	Sfruttamento	Classe	NEd	NRk	Mx,Ed max	Mx,Rk	My,Ed max	My,Rk	χ,x	χ,y	kxx	kxy	kyx	kyy	χ,LT	Verifica
0	SLD 1	0.303	1	-18478.8	124566	157422.9	894223.7	1244.8	430465.2	1	1	0.529	0.281	0.79	0.469	1	Si

Verifica di stabilità a taglio anima Y §4.2.4.1.2.4 [4.2.27] NTC18

η	hw	tw	hw/tw max	Verifica
1.2	15.2	0.6	55.46	Si

Verifica di stabilità a taglio anima Y SLD §4.2.4.1.2.4 [4.2.27] NTC18

η	hw	tw	hw/tw max	Verifica
1.2	15.2	0.6	55.46	Si

Verifiche a deformabilità

Mensola X: No; Mensola Y: No.

Frecce lungo X

Ascissa freccia	Combinazione	Freccia	Luce	L/f	L/f,min	Tipo	Verifica
49.8	SLE RA 1	0	74.7	10000	250	Totale	Si
49.8	SLE RA 31	0	74.7	10000	250	Totale	Si
49.8	SLE RA 30	0	74.7	10000	250	Totale	Si
49.8	SLE RA 29	0	74.7	10000	250	Totale	Si

Ascissa freccia	Combinazione	Freccia	Luce	L/f	L/f,min	Tipo	Verifica
49.8	SLE RA 28	0	74.7	10000	250	Totale	Si
37.4	SLE RA 2	0	74.7	10000	350	Variabile	Si
49.8	SLE RA 31	0	74.7	10000	350	Variabile	Si
49.8	SLE RA 30	0	74.7	10000	350	Variabile	Si
49.8	SLE RA 29	0	74.7	10000	350	Variabile	Si
49.8	SLE RA 28	0	74.7	10000	350	Variabile	Si

Frecce lungo Y

Ascissa freccia	Combinazione	Freccia	Luce	L/f	L/f,min	Tipo	Verifica
44.8	SLE RA 33	0.015	74.7	4833.1	250	Totale	Si
44.8	SLE RA 31	0.015	74.7	4833.1	250	Totale	Si
44.8	SLE RA 32	0.015	74.7	4833.1	250	Totale	Si
44.8	SLE RA 30	0.015	74.7	4833.1	250	Totale	Si
44.8	SLE RA 29	0.015	74.7	5032.2	250	Totale	Si
42.3	SLE RA 33	0.012	74.7	6086.2	350	Variabile	Si
42.3	SLE RA 31	0.012	74.7	6086.2	350	Variabile	Si
42.3	SLE RA 32	0.012	74.7	6086.2	350	Variabile	Si
42.3	SLE RA 30	0.012	74.7	6086.2	350	Variabile	Si
42.3	SLE RA 29	0.012	74.7	6406.6	350	Variabile	Si

Superelemento in acciaio composto dall'asta 34

Caratteristiche del materiale

Acciaio: S275, fyk = 2750

Caratteristiche geometriche

Lunghezza: 74.7
Nodo iniziale: 32 Nodo finale: 72
Cerniera iniziale: No Cerniera finale: No
Sovraresistenza: 0% Sisma Z: No

Caratteristiche della sezione

Sezione	Rotazione	Area	Jx	Jy	ix	iy	Wx	Wy	Wplx	Wply
HEA180	0	45.3	2512.55	924.65	7.45	4.52	293.87	102.74	325.17	156.53

Verifiche di resistenza

Verifiche a forza assiale §4.2.4.1.2.1 - §4.2.4.1.2.2 NTC18

X	Comb.	Sfruttamento	Classe	NEd	Nc,Rd	Nt,Rd	Riduzione da taglio	ρx	ρy	Verifica
0	SLU 129	0.426	1	-50501.3	118634.3		1	0	0	Si

Verifiche a forza assiale SLD §4.2.4.1.2.1 - §4.2.4.1.2.2 NTC18

X	Comb.	Sfruttamento	Classe	NEd	Nc,Rd	Nt,Rd	Riduzione da taglio	ρx	ρy	Verifica
0	SLD 13	0.156	1	-18478.8	118634.3		1	0	0	Si

Verifica a taglio X §4.2.4.1.2.4 NTC18

X	Comb.	Sfruttamento	VEd	Vc,Rd	Av	Interazione taglio-torsione	Riduzione torsione	Verifica
74.7	SLV 8	0.004	-201.8	49131.9	36.18	Considerata	0.9	Si

Verifica a taglio X SLD §4.2.4.1.2.4 NTC18

X	Comb.	Sfruttamento	VEd	Vc,Rd	Av	Interazione taglio-torsione	Riduzione torsione	Verifica
74.7	SLD 8	0.001	-77.4	52647.8	36.18	Considerata	0.96	Si

Verifica a taglio Y §4.2.4.1.2.4 NTC18

X	Comb.	Sfruttamento	VEd	Vc,Rd	Av	Interazione taglio-torsione	Riduzione torsione	Verifica
74.7	SLU 132	0.323	-7080.3	21937.2	14.52	Considerata	1	Si

Verifica a taglio Y SLD §4.2.4.1.2.4 NTC18

X	Comb.	Sfruttamento	VEd	Vc,Rd	Av	Interazione taglio-torsione	Riduzione torsione	Verifica
74.7	SLD 16	0.15	-3251.1	21701.3	14.52	Considerata	0.99	Si

Verifica a torsione §4.2.4.1.2.5 NTC18

X	Comb.	Sfruttamento torsione	TEd	TRd	Riduzione taglio resistente	Sfruttamento taglio-torsione	τEd,totale	τRd	Verifica
37.4	SLV 8	0.242	4378.1	18118.1	Considerata				Si

Verifica a torsione SLD §4.2.4.1.2.5 NTC18

X	Comb.	Sfruttamento torsione	TEd	TRd	Riduzione taglio resistente	Sfruttamento taglio-torsione	τEd,totale	τRd	Verifica
74.7	SLD 8	0.092	1669.9	18118.1	Considerata				Si

Verifica a presso/tenso flessione retta X §§ 4.2.4.1.2.3 - 4.2.4.1.2.6 - 4.2.4.1.2.7 - 4.2.4.1.2.8 NTC18

Verifiche eseguite utilizzando la formula conservativa (6.2) §6.2.1 EN 1993-1-1:2005.

X	Comb.	Sfruttamento	Classe	NEd	NRd	Rid. NRd da VEd	Mx,Ed	Mx,Rd	Rid. Mx,Rd da VEd	Rid. Mx,Rd da NEd	ρx	ρy	Verifica
67.2	SLU 99	0.832	1	-47103.3	118634.3	1	370292	851642	1		0	0	Si

Verifica a presso/tenso flessione retta X SLD §§ 4.2.4.1.2.3 - 4.2.4.1.2.6 - 4.2.4.1.2.7 - 4.2.4.1.2.8 NTC18

Verifiche eseguite utilizzando la formula conservativa (6.2) §6.2.1 EN 1993-1-1:2005.

X	Comb.	Sfruttamento	Classe	NEd	NRd	Rid. NRd da VEd	Mx,Ed	Mx,Rd	Rid. Mx,Rd da VEd	Rid. Mx,Rd da NEd	ρx	ρy	Verifica
62.3	SLD 13	0.277	1	-16058.6	118634.3	1	120291	851642	1		0	0	Si

Verifica a presso/tenso flessione retta Y §§ 4.2.4.1.2.3 - 4.2.4.1.2.6 - 4.2.4.1.2.7 - 4.2.4.1.2.8 NTC18

Verifiche eseguite utilizzando la formula conservativa (6.2) §6.2.1 EN 1993-1-1:2005.

X	Comb.	Sfruttamento	Classe	NEd	NRd	Rid. NRd da VEd	My,Ed	My,Rd	Rid. My,Rd da VEd	Rid. My,Rd da NEd	ρx	ρy	Verifica
19.9	SLV 3	0.132	1	-15048.7	118634.3	1	2184	409967	1		0	0	Si

Verifica a presso/tenso flessione deviata §§ 4.2.4.1.2.3 - 4.2.4.1.2.6 - 4.2.4.1.2.7 - 4.2.4.1.2.8 NTC18

Verifiche eseguite utilizzando la formula conservativa (6.2) §6.2.1 EN 1993-1-1:2005.

X	Comb.	Sfruttamento	Classe	NEd	NRd	Rid. NRd da VEd	Mx,Ed	Mx,Rd	My,Ed	My,Rd	Rid. Mx,Rd da VEd	Rid. Mx,Rd da NEd	Rid. My,Rd da VEd	Rid. My,Rd da NEd	α	β	ρx	ρy	Verifica
74.7	SLU 99	0.889	1	-46725.7	118634.3	1	421617	851642	-119	409967	1		1				0	0	Si

Verifica a presso/tenso flessione deviata SLD §§ 4.2.4.1.2.3 - 4.2.4.1.2.6 - 4.2.4.1.2.7 - 4.2.4.1.2.8 NTC18

Verifiche eseguite utilizzando la formula conservativa (6.2) §6.2.1 EN 1993-1-1:2005.

X	Comb.	Sfruttamento	Classe	NEd	NRd	Rid. NRd da VEd	Mx,Ed	Mx,Rd	My,Ed	My,Rd	Rid. Mx,Rd da VEd	Rid. Mx,Rd da NEd	Rid. My,Rd da VEd	Rid. My,Rd da NEd	α	β	ρx	ρy	Verifica
74.7	SLD 16	0.317	1	-15574.5	118634.3	1	157423	851642	-493	409967	1		1				0	0	Si

Verifiche ad instabilità

Caratteristiche iniziali

Membratura principale per controllo snellezza; Calcolo di snellezze ed N critici condotti secondo gli assi principali;
Curva X: b; Curva Y: c; Svergolamento: Carico all'estradosso; Curva svergolamento: b;

Dati per instabilità attorno a x

Numero rit.	Presente	Ascissa	Campata	βx/m	Vincolo a entrambi estremi	λx/m	λVer
1	Si	0					
			1-2	1	Si	10	Si, (<200)
2	Si	74.7					

Dati per instabilità attorno a y

Numero rit.	Presente	Ascissa	Campata	βy/n	k,LT	kw,LT	Vincolo a entrambi estremi	λy/n	λVer
1	Si	0							
			1-2	1	1	1	Si	16.5	Si, (<200)
2	Si	74.7							

Verifica di stabilità per pressoflessione §C.4.2.4.1.3.3.2 NTC18

X	Comb.	Sfruttamento	Classe	NEd	NRk	Mx,Ed max	Mx,Rk	My,Ed max	My,Rk	χ,x	χ,y	kxx	kxy	kyx	kyy	χ,LT	Verifica
0	SLU 99	0.817	1	-50501.3	124566	421617	894223.7	119	430465.2	1	1	0.552	0.218	0.79	0.363	1	Si

Verifica di stabilità per pressoflessione SLD §C.4.2.4.1.3.3.2 NTC18

X	Comb.	Sfruttamento	Classe	NEd	NRk	Mx,Ed max	Mx,Rk	My,Ed max	My,Rk	χ,x	χ,y	kxx	kxy	kyx	kyy	χ,LT	Verifica
0	SLD 13	0.303	1	-18478.8	124566	157422.9	894223.7	1244.8	430465.2	1	1	0.529	0.281	0.79	0.469	1	Si

Verifica di stabilità a taglio anima Y §4.2.4.1.2.4 [4.2.27] NTC18

η	hw	tw	hw/tw max	Verifica
1.2	15.2	0.6	55.46	Si

Verifica di stabilità a taglio anima Y SLD §4.2.4.1.2.4 [4.2.27] NTC18

η	hw	tw	hw/tw max	Verifica
1.2	15.2	0.6	55.46	Si

Verifiche a deformabilità

Mensola X: No; Mensola Y: No.

Frecce lungo X

Ascissa freccia	Combinazione	Freccia	Luce	L/f	L/f,min	Tipo	Verifica
49.8	SLE RA 1	0	74.7	10000	250	Totale	Si
49.8	SLE RA 31	0	74.7	10000	250	Totale	Si
49.8	SLE RA 30	0	74.7	10000	250	Totale	Si
49.8	SLE RA 29	0	74.7	10000	250	Totale	Si
49.8	SLE RA 28	0	74.7	10000	250	Totale	Si
37.4	SLE RA 2	0	74.7	10000	350	Variabile	Si
49.8	SLE RA 31	0	74.7	10000	350	Variabile	Si
49.8	SLE RA 30	0	74.7	10000	350	Variabile	Si
49.8	SLE RA 29	0	74.7	10000	350	Variabile	Si
49.8	SLE RA 28	0	74.7	10000	350	Variabile	Si

Frecce lungo Y

Ascissa freccia	Combinazione	Freccia	Luce	L/f	L/f,min	Tipo	Verifica
44.8	SLE RA 33	0.015	74.7	4829.6	250	Totale	Si
44.8	SLE RA 31	0.015	74.7	4829.6	250	Totale	Si
44.8	SLE RA 32	0.015	74.7	4829.6	250	Totale	Si
44.8	SLE RA 30	0.015	74.7	4829.6	250	Totale	Si
44.8	SLE RA 29	0.015	74.7	5029.1	250	Totale	Si
42.3	SLE RA 33	0.012	74.7	6080.5	350	Variabile	Si
42.3	SLE RA 31	0.012	74.7	6080.5	350	Variabile	Si
42.3	SLE RA 32	0.012	74.7	6080.5	350	Variabile	Si
42.3	SLE RA 30	0.012	74.7	6080.5	350	Variabile	Si
42.3	SLE RA 29	0.012	74.7	6401.5	350	Variabile	Si

Superelemento in acciaio composto dall'asta 35

Caratteristiche del materiale

Acciaio: S275, fyk = 2750

Caratteristiche geometriche

Lunghezza: 78.5
Nodo iniziale: 71 Nodo finale: 93
Cerniera iniziale: No Cerniera finale: No
Sovraresistenza: 0% Sisma Z: No

Caratteristiche della sezione

Sezione	Rotazione	Area	Jx	Jy	ix	iy	Wx	Wy	Wplx	Wply
HEA180	0	45.3	2512.55	924.65	7.45	4.52	293.87	102.74	325.17	156.53

Verifiche di resistenza

Verifiche a forza assiale §4.2.4.1.2.1 - §4.2.4.1.2.2 NTC18

X	Comb.	Sfruttamento	Classe	NEd	Nc,Rd	Nt,Rd	Riduzione da taglio	ρx	ρy	Verifica
0	SLU 129	0.419	1	-49761.5	118634.3		1	0	0	Si

Verifiche a forza assiale SLD §4.2.4.1.2.1 - §4.2.4.1.2.2 NTC18

X	Comb.	Sfruttamento	Classe	NEd	Nc,Rd	Nt,Rd	Riduzione da taglio	ρx	ρy	Verifica
0	SLD 1	0.135	1	-15957.2	118634.3		1	0	0	Si

Verifica a taglio X §4.2.4.1.2.4 NTC18

X	Comb.	Sfruttamento	VEd	Vc,Rd	Av	Interazione taglio-torsione	Riduzione torsione	Verifica
0	SLV 9	0.002	-106.8	50016.1	36.18	Considerata	0.91	Si

Verifica a taglio X SLD §4.2.4.1.2.4 NTC18

X	Comb.	Sfruttamento	VEd	Vc,Rd	Av	Interazione taglio-torsione	Riduzione torsione	Verifica
0	SLD 9	0.001	-41.2	52970.7	36.18	Considerata	0.97	Si

Verifica a taglio Y §4.2.4.1.2.4 NTC18

X	Comb.	Sfruttamento	VEd	Vc,Rd	Av	Interazione taglio-torsione	Riduzione torsione	Verifica
0	SLU 99	0.168	3698	21950.9	14.52	Considerata	1	Si

Verifica a taglio Y SLD §4.2.4.1.2.4 NTC18

X	Comb.	Sfruttamento	VEd	Vc,Rd	Av	Interazione taglio-torsione	Riduzione torsione	Verifica
0	SLD 10	0.074	1576.3	21255.7	14.52	Considerata	0.97	Si

Verifica a torsione §4.2.4.1.2.5 NTC18

X	Comb.	Sfruttamento torsione	TEd	TRd	Riduzione taglio resistente	Sfruttamento taglio-torsione	τEd,totale	τRd	Verifica
78.5	SLV 10	0.205	3714.7	18118.1	Considerata				Si

Verifica a torsione SLD §4.2.4.1.2.5 NTC18

X	Comb.	Sfruttamento torsione	TEd	TRd	Riduzione taglio resistente	Sfruttamento taglio-torsione	τEd,totale	τRd	Verifica
78.5	SLD 10	0.078	1411.8	18118.1	Considerata				Si

Verifica a presso/tenso flessione retta X §§ 4.2.4.1.2.3 - 4.2.4.1.2.6 - 4.2.4.1.2.7 - 4.2.4.1.2.8 NTC18

Verifiche eseguite utilizzando la formula conservativa (6.2) §6.2.1 EN 1993-1-1:2005.

X	Comb.	Sfruttamento	Classe	NEd	NRd	Rid. NRd da VEd	Mx,Ed	Mx,Rd	Rid. Mx,Rd da VEd	Rid. Mx,Rd da NEd	ρx	ρy	Verifica
7.8	SLU 132	0.881	1	-49646.9	118634.3	1	393549	851642	1		0	0	Si

Verifica a presso/tenso flessione deviata §§ 4.2.4.1.2.3 - 4.2.4.1.2.6 - 4.2.4.1.2.7 - 4.2.4.1.2.8 NTC18

Verifiche eseguite utilizzando la formula conservativa (6.2) §6.2.1 EN 1993-1-1:2005.

X	Comb.	Sfruttamento	Classe	NEd	NRd	Rid. NRd da VEd	Mx,Ed	Mx,Rd	My,Ed	My,Rd	Rid. Mx,Rd da VEd	Rid. Mx,Rd da NEd	Rid. My,Rd da VEd	Rid. My,Rd da NEd	α	β	ρx	ρy	Verifica
0	SLU 132	0.915	1	-49761.5	118634.3	1	421479	851642	117	409967	1		1				0	0	Si

Verifica a presso/tenso flessione deviata SLD §§ 4.2.4.1.2.3 - 4.2.4.1.2.6 - 4.2.4.1.2.7 - 4.2.4.1.2.8 NTC18

Verifiche eseguite utilizzando la formula conservativa (6.2) §6.2.1 EN 1993-1-1:2005.

X	Comb.	Sfruttamento	Classe	NEd	NRd	Rid. NRd da VEd	Mx,Ed	Mx,Rd	My,Ed	My,Rd	Rid. Mx,Rd da VEd	Rid. Mx,Rd da NEd	Rid. My,Rd da VEd	Rid. My,Rd da NEd	α	β	ρx	ρy	Verifica
0	SLD 3	0.321	1	-15957.2	118634.3	1	157423	851642	514	409967	1		1				0	0	Si

Verifiche ad instabilità

Caratteristiche iniziali

Membratura principale per controllo snellezza; Calcolo di snellezze ed N critici condotti secondo gli assi principali;
Curva X: b; Curva Y: c; Svergolamento: Carico all'estradosso; Curva svergolamento: b;

Dati per instabilità attorno a x

Numero rit.	Presente	Ascissa	Campata	βx/m	Vincolo a entrambi estremi	λx/m	λVer
1	Si	0					

Numero rit.	Presente	Ascissa	Campata	βx/m	Vincolo a entrambi estremi	λx/m	λVer
			1-2	1	Si	10.5	Si, (<200)
2	Si	78.5					

Dati per instabilità attorno a y

Numero rit.	Presente	Ascissa	Campata	βy/n	k,LT	kw,LT	Vincolo a entrambi estremi	λy/n	λVer
1	Si	0							
			1-2	1	1	1	Si	17.4	Si, (<200)
2	Si	78.5							

Verifica di stabilità per pressoflessione §C.4.2.4.1.3.3.2 NTC18

X	Comb.	Sfruttamento	Classe	NEd	NRk	Mx,Ed max	Mx,Rk	My,Ed max	My,Rk	χ,x	χ,y	kxx	kxy	kyx	kyy	χ,LT	Verifica
0	SLU 132	0.816	1	-49761.5	124566	421479	894223.7	117	430465.2	1	1	0.751	0.271	0.8	0.452	1	Si

Verifica di stabilità per pressoflessione SLD §C.4.2.4.1.3.3.2 NTC18

X	Comb.	Sfruttamento	Classe	NEd	NRk	Mx,Ed max	Mx,Rk	My,Ed max	My,Rk	χ,x	χ,y	kxx	kxy	kyx	kyy	χ,LT	Verifica
0	SLD 3	0.285	1	-15957.2	124566	157422.9	894223.7	1373.8	430465.2	1	1	0.788	0.438	0.8	0.73	1	Si

Verifica di stabilità a taglio anima Y §4.2.4.1.2.4 [4.2.27] NTC18

η	hw	tw	hw/tw max	Verifica
1.2	15.2	0.6	55.46	Si

Verifica di stabilità a taglio anima Y SLD §4.2.4.1.2.4 [4.2.27] NTC18

η	hw	tw	hw/tw max	Verifica
1.2	15.2	0.6	55.46	Si

Verifiche a deformabilità

Mensola X: No; Mensola Y: No.

Frecce lungo X

Ascissa freccia	Combinazione	Freccia	Luce	L/f	L/f,min	Tipo	Verifica
28.8	SLE RA 1	0	78.5	10000	250	Totale	Si
28.8	SLE RA 31	0	78.5	10000	250	Totale	Si
28.8	SLE RA 30	0	78.5	10000	250	Totale	Si
28.8	SLE RA 29	0	78.5	10000	250	Totale	Si
28.8	SLE RA 28	0	78.5	10000	250	Totale	Si
23.5	SLE RA 2	0	78.5	10000	350	Variabile	Si
28.8	SLE RA 31	0	78.5	10000	350	Variabile	Si
28.8	SLE RA 30	0	78.5	10000	350	Variabile	Si
28.8	SLE RA 29	0	78.5	10000	350	Variabile	Si
28.8	SLE RA 28	0	78.5	10000	350	Variabile	Si

Frecce lungo Y

Ascissa freccia	Combinazione	Freccia	Luce	L/f	L/f,min	Tipo	Verifica
36.6	SLE RA 33	0.029	78.5	2701.2	250	Totale	Si
36.6	SLE RA 31	0.029	78.5	2701.2	250	Totale	Si
36.6	SLE RA 32	0.029	78.5	2701.2	250	Totale	Si
36.6	SLE RA 30	0.029	78.5	2701.2	250	Totale	Si
36.6	SLE RA 29	0.028	78.5	2787.1	250	Totale	Si
36.6	SLE RA 33	0.019	78.5	4110.1	350	Variabile	Si
36.6	SLE RA 31	0.019	78.5	4110.1	350	Variabile	Si
36.6	SLE RA 32	0.019	78.5	4110.1	350	Variabile	Si
36.6	SLE RA 30	0.019	78.5	4110.1	350	Variabile	Si
36.6	SLE RA 29	0.018	78.5	4312.5	350	Variabile	Si

Superelemento in acciaio composto dall'asta 36

Caratteristiche del materiale

Acciaio: S275, fyk = 2750

Caratteristiche geometriche

Lunghezza: 78.5
Nodo iniziale: 72 Nodo finale: 94
Cerniera iniziale: No Cerniera finale: No
Sovraresistenza: 0% Sisma Z: No

Caratteristiche della sezione

Sezione	Rotazione	Area	Jx	Jy	ix	iy	Wx	Wy	Wplx	Wply
HEA180	0	45.3	2512.55	924.65	7.45	4.52	293.87	102.74	325.17	156.53

Verifiche di resistenza

Verifiche a forza assiale §4.2.4.1.2.1 - §4.2.4.1.2.2 NTC18

X	Comb.	Sfruttamento	Classe	NEd	Nc,Rd	Nt,Rd	Riduzione da taglio	ρx	ρy	Verifica
0	SLU 96	0.419	1	-49759.9	118634.3		1	0	0	Si

Verifiche a forza assiale SLD §4.2.4.1.2.1 - §4.2.4.1.2.2 NTC18

X	Comb.	Sfruttamento	Classe	NEd	Nc,Rd	Nt,Rd	Riduzione da taglio	ρx	ρy	Verifica
0	SLD 13	0.135	1	-15957.2	118634.3		1	0	0	Si

Verifica a taglio X §4.2.4.1.2.4 NTC18

X	Comb.	Sfruttamento	VEd	Vc,Rd	Av	Interazione taglio-torsione	Riduzione torsione	Verifica
0	SLV 5	0.002	106.8	50016.1	36.18	Considerata	0.91	Si

Verifica a taglio X SLD §4.2.4.1.2.4 NTC18

X	Comb.	Sfruttamento	VEd	Vc,Rd	Av	Interazione taglio-torsione	Riduzione torsione	Verifica
0	SLD 5	0.001	41.2	52970.7	36.18	Considerata	0.97	Si

Verifica a taglio Y §4.2.4.1.2.4 NTC18

X	Comb.	Sfruttamento	VEd	Vc,Rd	Av	Interazione taglio-torsione	Riduzione torsione	Verifica
0	SLU 132	0.168	3694.2	21950.9	14.52	Considerata	1	Si

Verifica a taglio Y SLD §4.2.4.1.2.4 NTC18

X	Comb.	Sfruttamento	VEd	Vc,Rd	Av	Interazione taglio-torsione	Riduzione torsione	Verifica
0	SLD 6	0.074	1576.3	21255.7	14.52	Considerata	0.97	Si

Verifica a torsione §4.2.4.1.2.5 NTC18

X	Comb.	Sfruttamento torsione	TEd	TRd	Riduzione taglio resistente	Sfruttamento taglio-torsione	τEd,totale	τRd	Verifica
41.8	SLV 5	0.205	-3714.7	18118.1	Considerata				Si

Verifica a torsione SLD §4.2.4.1.2.5 NTC18

X	Comb.	Sfruttamento torsione	TEd	TRd	Riduzione taglio resistente	Sfruttamento taglio-torsione	τEd,totale	τRd	Verifica
41.8	SLD 5	0.078	-1411.8	18118.1	Considerata				Si

Verifica a presso/tenso flessione retta X §§ 4.2.4.1.2.3 - 4.2.4.1.2.6 - 4.2.4.1.2.7 - 4.2.4.1.2.8 NTC18

Verifiche eseguite utilizzando la formula conservativa (6.2) §6.2.1 EN 1993-1-1:2005.

X	Comb.	Sfruttamento	Classe	NEd	NRd	Rid. NRd da VEd	Mx,Ed	Mx,Rd	Rid. Mx,Rd da VEd	Rid. Mx,Rd da NEd	ρx	ρy	Verifica
7.8	SLU 132	0.881	1	-49645.3	118634.3	1	393763	851642	1		0	0	Si

Verifica a presso/tenso flessione deviata §§ 4.2.4.1.2.3 - 4.2.4.1.2.6 - 4.2.4.1.2.7 - 4.2.4.1.2.8 NTC18

Verifiche eseguite utilizzando la formula conservativa (6.2) §6.2.1 EN 1993-1-1:2005.

X	Comb.	Sfruttamento	Classe	NEd	NRd	Rid. NRd da VEd	Mx,Ed	Mx,Rd	My,Ed	My,Rd	Rid. Mx,Rd da VEd	Rid. Mx,Rd da NEd	Rid. My,Rd da VEd	Rid. My,Rd da NEd	α	β	ρx	ρy	Verifica
0	SLU 132	0.915	1	-49759.9	118634.3	1	421662	851642	-117	409967	1		1				0	0	Si

Verifica a presso/tenso flessione deviata SLD §§ 4.2.4.1.2.3 - 4.2.4.1.2.6 - 4.2.4.1.2.7 - 4.2.4.1.2.8 NTC18

Verifiche eseguite utilizzando la formula conservativa (6.2) §6.2.1 EN 1993-1-1:2005.

X	Comb.	Sfruttamento	Classe	NEd	NRd	Rid. NRd da VEd	Mx,Ed	Mx,Rd	My,Ed	My,Rd	Rid. Mx,Rd da VEd	Rid. Mx,Rd da NEd	Rid. My,Rd da VEd	Rid. My,Rd da NEd	α	β	ρx	ρy	Verifica
0	SLD 16	0.321	1	-15957.2	118634.3	1	157423	851642	-514	409967	1		1				0	0	Si

Verifiche ad instabilità

Caratteristiche iniziali

Membratura principale per controllo snellezza; Calcolo di snellezze ed N critici condotti secondo gli assi principali;
Curva X: b; Curva Y: c; Svergolamento: Carico all'estradosso; Curva svergolamento: b;

Dati per instabilità attorno a x

Numero rit.	Presente	Ascissa	Campata	βx/m	Vincolo a entrambi estremi	λx/m	λVer
1	Si	0					
			1-2	1	Si	10.5	Si, (<200)
2	Si	78.5					

Dati per instabilità attorno a y

Numero rit.	Presente	Ascissa	Campata	βy/n	k,LT	kw,LT	Vincolo a entrambi estremi	λy/n	λVer
1	Si	0							
			1-2	1	1	1	Si	17.4	Si, (<200)
2	Si	78.5							

Verifica di stabilità per pressoflessione §C.4.2.4.1.3.3.2 NTC18

X	Comb.	Sfruttamento	Classe	NEd	NRk	Mx,Ed max	Mx,Rk	My,Ed max	My,Rk	χ,x	χ,y	kxx	kxy	kyx	kyy	χ,LT	Verifica
0	SLU 99	0.816	1	-49759.9	124566	421662.1	894223.7	117	430465.2	1	1	0.751	0.271	0.8	0.452	1	Si

Verifica di stabilità per pressoflessione SLD §C.4.2.4.1.3.3.2 NTC18

X	Comb.	Sfruttamento	Classe	NEd	NRk	Mx,Ed max	Mx,Rk	My,Ed max	My,Rk	χ,x	χ,y	kxx	kxy	kyx	kyy	χ,LT	Verifica
0	SLD 16	0.285	1	-15957.2	124566	157422.9	894223.7	1373.8	430465.2	1	1	0.788	0.438	0.8	0.73	1	Si

Verifica di stabilità a taglio anima Y §4.2.4.1.2.4 [4.2.27] NTC18

η	hw	tw	hw/tw max	Verifica
1.2	15.2	0.6	55.46	Si

Verifica di stabilità a taglio anima Y SLD §4.2.4.1.2.4 [4.2.27] NTC18

η	hw	tw	hw/tw max	Verifica
1.2	15.2	0.6	55.46	Si

Verifiche a deformabilità

Mensola X: No; Mensola Y: No.

Frecce lungo X

Ascissa freccia	Combinazione	Freccia	Luce	L/f	L/f,min	Tipo	Verifica
28.8	SLE RA 1	0	78.5	10000	250	Totale	Si
28.8	SLE RA 31	0	78.5	10000	250	Totale	Si
28.8	SLE RA 30	0	78.5	10000	250	Totale	Si
28.8	SLE RA 29	0	78.5	10000	250	Totale	Si
28.8	SLE RA 28	0	78.5	10000	250	Totale	Si
23.5	SLE RA 2	0	78.5	10000	350	Variabile	Si
28.8	SLE RA 31	0	78.5	10000	350	Variabile	Si
28.8	SLE RA 30	0	78.5	10000	350	Variabile	Si
28.8	SLE RA 29	0	78.5	10000	350	Variabile	Si
28.8	SLE RA 28	0	78.5	10000	350	Variabile	Si

Frecce lungo Y

Ascissa freccia	Combinazione	Freccia	Luce	L/f	L/f,min	Tipo	Verifica
36.6	SLE RA 33	0.029	78.5	2698.2	250	Totale	Si
36.6	SLE RA 31	0.029	78.5	2698.2	250	Totale	Si
36.6	SLE RA 32	0.029	78.5	2698.2	250	Totale	Si
36.6	SLE RA 30	0.029	78.5	2698.2	250	Totale	Si
36.6	SLE RA 29	0.028	78.5	2784.6	250	Totale	Si
36.6	SLE RA 33	0.019	78.5	4103.2	350	Variabile	Si
36.6	SLE RA 31	0.019	78.5	4103.2	350	Variabile	Si
36.6	SLE RA 32	0.019	78.5	4103.2	350	Variabile	Si
36.6	SLE RA 30	0.019	78.5	4103.2	350	Variabile	Si
36.6	SLE RA 29	0.018	78.5	4306.3	350	Variabile	Si

Superelemento in acciaio composto dall'asta 37

Caratteristiche del materiale

Acciaio: S275, fyk = 2750

Caratteristiche geometriche

Lunghezza: 170.7
Nodo iniziale: 94 Nodo finale: 114
Cerniera iniziale: No Cerniera finale: No
Sovraresistenza: 0% Sisma Z: No

Caratteristiche della sezione

Sezione	Rotazione	Area	Jx	Jy	ix	iy	Wx	Wy	Wplx	Wply
HEA180	0	45.3	2512.55	924.65	7.45	4.52	293.87	102.74	325.17	156.53

Verifiche di resistenza

Verifiche a forza assiale §4.2.4.1.2.1 - §4.2.4.1.2.2 NTC18

X	Comb.	Sfruttamento	Classe	NEd	Nc,Rd	Nt,Rd	Riduzione da taglio	ρx	ρy	Verifica
0	SLU 129	0.386	1	-45749.3	118634.3		1	0	0	Si

Verifiche a forza assiale SLD §4.2.4.1.2.1 - §4.2.4.1.2.2 NTC18

X	Comb.	Sfruttamento	Classe	NEd	Nc,Rd	Nt,Rd	Riduzione da taglio	ρx	ρy	Verifica
0	SLD 14	0.12	1	-14286.8	118634.3		1	0	0	Si

Verifica a taglio X §4.2.4.1.2.4 NTC18

X	Comb.	Sfruttamento	VEd	Vc,Rd	Av	Interazione taglio-torsione	Riduzione torsione	Verifica
0	SLV 5	0.001	-62.6	54400.5	36.18	Considerata	0.99	Si

Verifica a taglio Y §4.2.4.1.2.4 NTC18

X	Comb.	Sfruttamento	VEd	Vc,Rd	Av	Interazione taglio-torsione	Riduzione torsione	Verifica
0	SLU 132	0.337	7404.2	21950.9	14.52	Considerata	1	Si

Verifica a taglio Y SLD §4.2.4.1.2.4 NTC18

X	Comb.	Sfruttamento	VEd	Vc,Rd	Av	Interazione taglio-torsione	Riduzione torsione	Verifica
0	SLD 13	0.161	3522.3	21936.9	14.52	Considerata	1	Si

Verifica a torsione §4.2.4.1.2.5 NTC18

X	Comb.	Sfruttamento torsione	TEd	TRd	Riduzione taglio resistente	Sfruttamento taglio-torsione	τEd,totale	τRd	Verifica
91	SLV 5	0.014	-249.9	18118.1	Considerata				Si

Verifica a torsione SLD §4.2.4.1.2.5 NTC18

X	Comb.	Sfruttamento torsione	TEd	TRd	Riduzione taglio resistente	Sfruttamento taglio-torsione	τEd,totale	τRd	Verifica
91	SLD 5	0.005	-95	18118.1	Considerata				Si

Verifica a presso/tenso flessione retta X §§ 4.2.4.1.2.3 - 4.2.4.1.2.6 - 4.2.4.1.2.7 - 4.2.4.1.2.8 NTC18

Verifiche eseguite utilizzando la formula conservativa (6.2) §6.2.1 EN 1993-1-1:2005.

X	Comb.	Sfruttamento	Classe	NEd	NRd	Rid. NRd da VEd	Mx,Ed	Mx,Rd	Rid. Mx,Rd da VEd	Rid. Mx,Rd da NEd	ρx	ρy	Verifica
170.7	SLU 132	0.946	1	-45001.7	118634.3	1	-482454	851642	1		0	0	Si

Verifica a presso/tenso flessione retta Y SLD §§ 4.2.4.1.2.3 - 4.2.4.1.2.6 - 4.2.4.1.2.7 - 4.2.4.1.2.8 NTC18

Verifiche eseguite utilizzando la formula conservativa (6.2) §6.2.1 EN 1993-1-1:2005.

X	Comb.	Sfruttamento	Classe	NEd	NRd	Rid. NRd da VEd	My,Ed	My,Rd	Rid. My,Rd da VEd	Rid. My,Rd da NEd	ρx	ρy	Verifica
17.1	SLD 1	0.119	1	-13715	118634.3	1	1349	409967	1		0	0	Si

Verifica a presso/tenso flessione deviata §§ 4.2.4.1.2.3 - 4.2.4.1.2.6 - 4.2.4.1.2.7 - 4.2.4.1.2.8 NTC18

Verifiche eseguite utilizzando la formula conservativa (6.2) §6.2.1 EN 1993-1-1:2005.

X	Comb.	Sfruttamento	Classe	NEd	NRd	Rid. NRd da VEd	Mx,Ed	Mx,Rd	My,Ed	My,Rd	Rid. Mx,Rd da VEd	Rid. Mx,Rd da NEd	Rid. My,Rd da VEd	Rid. My,Rd da NEd	α	β	ρx	ρy	Verifica
0	SLV 14	0.323	1	-14604	118634.3	1	162147	851642	3852	409967	1		1				0	0	Si

Verifica a presso/tenso flessione deviata SLD §§ 4.2.4.1.2.3 - 4.2.4.1.2.6 - 4.2.4.1.2.7 - 4.2.4.1.2.8 NTC18

Verifiche eseguite utilizzando la formula conservativa (6.2) §6.2.1 EN 1993-1-1:2005.

X	Comb.	Sfruttamento	Classe	NEd	NRd	Rid. NRd da VEd	Mx,Ed	Mx,Rd	My,Ed	My,Rd	Rid. Mx,Rd da VEd	Rid. Mx,Rd da NEd	Rid. My,Rd da VEd	Rid. My,Rd da NEd	α	β	ρx	ρy	Verifica
0	SLD 14	0.264	1	-14286.8	118634.3	1	118961	851642	1472	409967	1		1				0	0	Si

Verifiche ad instabilità

Caratteristiche iniziali

Membratura principale per controllo snellezza; Calcolo di snellezze ed N critici condotti secondo gli assi principali;
Curva X: b; Curva Y: c; Svergolamento: Carico all'estradosso; Curva svergolamento: b;

Dati per instabilità attorno a x

Numero rit.	Presente	Ascissa	Campata	βx/m	Vincolo a entrambi estremi	λx/m	λVer
1	Si	0					
			1-2	1	Si	22.9	Si, (<200)
2	Si	170.7					

Dati per instabilità attorno a y

Numero rit.	Presente	Ascissa	Campata	βy/n	k,LT	kw,LT	Vincolo a entrambi estremi	λy/n	λVer
1	Si	0							
			1-2	1	1	1	Si	37.8	Si, (<200)
2	Si	170.7							

Verifica di stabilità per pressoflessione §C.4.2.4.1.3.3.2 NTC18

X	Comb.	Sfruttamento	Classe	NEd	NRk	Mx,Ed max	Mx,Rk	My,Ed max	My,Rk	χ,x	χ,y	kxx	kxy	kyx	kyy	χ,LT	Verifica
0	SLU 99	0.989	1	-45749.3	124566	482453.7	894223.7	32.7	430465.2	0.977	0.879	0.641	0.453	0.949	0.756	0.978	Si

Verifica di stabilità per pressoflessione SLD §C.4.2.4.1.3.3.2 NTC18

X	Comb.	Sfruttamento	Classe	NEd	NRk	Mx,Ed max	Mx,Rk	My,Ed max	My,Rk	χ,x	χ,y	kxx	kxy	kyx	kyy	χ,LT	Verifica
0	SLD 14	0.28	1	-14286.8	124566	118961.5	894223.7	1472.1	430465.2	0.977	0.879	0.683	0.415	0.986	0.691	0.978	Si

Verifica di stabilità a taglio anima Y §4.2.4.1.2.4 [4.2.27] NTC18

η	hw	tw	hw/tw max	Verifica
1.2	15.2	0.6	55.46	Si

Verifica di stabilità a taglio anima Y SLD §4.2.4.1.2.4 [4.2.27] NTC18

η	hw	tw	hw/tw max	Verifica
1.2	15.2	0.6	55.46	Si

Verifiche a deformabilità

Mensola X: No; Mensola Y: No.

Frecce lungo X

Ascissa freccia	Combinazione	Freccia	Luce	L/f	L/f,min	Tipo	Verifica
74	SLE RA 1	0	170.7	10000	250	Totale	Si
74	SLE RA 31	0	170.7	10000	250	Totale	Si
74	SLE RA 30	0	170.7	10000	250	Totale	Si
74	SLE RA 29	0	170.7	10000	250	Totale	Si
74	SLE RA 28	0	170.7	10000	250	Totale	Si
68.3	SLE RA 2	0	170.7	10000	350	Variabile	Si
74	SLE RA 31	0	170.7	10000	350	Variabile	Si
74	SLE RA 30	0	170.7	10000	350	Variabile	Si
74	SLE RA 29	0	170.7	10000	350	Variabile	Si
74	SLE RA 28	0	170.7	10000	350	Variabile	Si

Frecce lungo Y

Ascissa freccia	Combinazione	Freccia	Luce	L/f	L/f,min	Tipo	Verifica
102.4	SLE RA 33	-0.133	170.7	1280.1	250	Totale	Si
102.4	SLE RA 31	-0.133	170.7	1280.1	250	Totale	Si
102.4	SLE RA 32	-0.133	170.7	1280.1	250	Totale	Si
102.4	SLE RA 30	-0.133	170.7	1280.1	250	Totale	Si
102.4	SLE RA 29	-0.13	170.7	1311.6	250	Totale	Si
108.1	SLE RA 33	-0.067	170.7	2561.4	350	Variabile	Si
108.1	SLE RA 31	-0.067	170.7	2561.4	350	Variabile	Si
108.1	SLE RA 32	-0.067	170.7	2561.4	350	Variabile	Si
108.1	SLE RA 30	-0.067	170.7	2561.4	350	Variabile	Si
108.1	SLE RA 29	-0.063	170.7	2691.3	350	Variabile	Si

Superelemento in acciaio composto dall'asta 38

Caratteristiche del materiale

Acciaio: S275, fyk = 2750

Caratteristiche geometriche

Lunghezza: 170.7
Nodo iniziale: 93 Nodo finale: 114
Cerniera iniziale: No Cerniera finale: No
Sovraresistenza: 0% Sisma Z: No

Caratteristiche della sezione

Sezione	Rotazione	Area	Jx	Jy	ix	iy	Wx	Wy	Wplx	Wply
HEA180	0	45.3	2512.55	924.65	7.45	4.52	293.87	102.74	325.17	156.53

Verifiche di resistenza

Verifiche a forza assiale §4.2.4.1.2.1 - §4.2.4.1.2.2 NTC18

X	Comb.	Sfruttamento	Classe	NEd	Nc,Rd	Nt,Rd	Riduzione da taglio	ρx	ρy	Verifica
0	SLU 129	0.386	1	-45749	118634.3		1	0	0	Si

Verifiche a forza assiale SLD §4.2.4.1.2.1 - §4.2.4.1.2.2 NTC18

X	Comb.	Sfruttamento	Classe	NEd	Nc,Rd	Nt,Rd	Riduzione da taglio	ρx	ρy	Verifica
0	SLD 1	0.12	1	-14286.8	118634.3		1	0	0	Si

Verifica a taglio X §4.2.4.1.2.4 NTC18

X	Comb.	Sfruttamento	VEd	Vc,Rd	Av	Interazione taglio-torsione	Riduzione torsione	Verifica
0	SLV 9	0.001	62.6	54400.5	36.18	Considerata	0.99	Si

Verifica a taglio Y §4.2.4.1.2.4 NTC18

X	Comb.	Sfruttamento	VEd	Vc,Rd	Av	Interazione taglio-torsione	Riduzione torsione	Verifica
0	SLU 99	0.337	7401.3	21950.9	14.52	Considerata	1	Si

Verifica a taglio Y SLD §4.2.4.1.2.4 NTC18

X	Comb.	Sfruttamento	VEd	Vc,Rd	Av	Interazione taglio-torsione	Riduzione torsione	Verifica
0	SLD 1	0.161	3522.3	21936.9	14.52	Considerata	1	Si

Verifica a torsione §4.2.4.1.2.5 NTC18

X	Comb.	Sfruttamento torsione	TEd	TRd	Riduzione taglio resistente	Sfruttamento taglio-torsione	τEd,totale	τRd	Verifica
170.7	SLV 10	0.014	249.9	18118.1	Considerata				Si

Verifica a torsione SLD §4.2.4.1.2.5 NTC18

X	Comb.	Sfruttamento torsione	TEd	TRd	Riduzione taglio resistente	Sfruttamento taglio-torsione	τEd,totale	τRd	Verifica
170.7	SLD 10	0.005	95	18118.1	Considerata				Si

Verifica a presso/tenso flessione retta X §§ 4.2.4.1.2.3 - 4.2.4.1.2.6 - 4.2.4.1.2.7 - 4.2.4.1.2.8 NTC18

Verifiche eseguite utilizzando la formula conservativa (6.2) §6.2.1 EN 1993-1-1:2005.

X	Comb.	Sfruttamento	Classe	NEd	NRd	Rid. NRd da VEd	Mx,Ed	Mx,Rd	Rid. Mx,Rd da VEd	Rid. Mx,Rd da NEd	ρx	ρy	Verifica
170.7	SLU 132	0.946	1	-45001.3	118634.3	1	-482454	851642	1		0	0	Si

Verifica a presso/tenso flessione retta Y SLD §§ 4.2.4.1.2.3 - 4.2.4.1.2.6 - 4.2.4.1.2.7 - 4.2.4.1.2.8 NTC18

Verifiche eseguite utilizzando la formula conservativa (6.2) §6.2.1 EN 1993-1-1:2005.

X	Comb.	Sfruttamento	Classe	NEd	NRd	Rid. NRd da VEd	My,Ed	My,Rd	Rid. My,Rd da VEd	Rid. My,Rd da NEd	ρx	ρy	Verifica
17.1	SLD 13	0.119	1	-13715	118634.3	1	-1349	409967	1		0	0	Si

Verifica a presso/tenso flessione deviata §§ 4.2.4.1.2.3 - 4.2.4.1.2.6 - 4.2.4.1.2.7 - 4.2.4.1.2.8 NTC18

Verifiche eseguite utilizzando la formula conservativa (6.2) §6.2.1 EN 1993-1-1:2005.

X	Comb.	Sfruttamento	Classe	NEd	NRd	Rid. NRd da VEd	Mx,Ed	Mx,Rd	My,Ed	My,Rd	Rid. Mx,Rd da VEd	Rid. Mx,Rd da NEd	Rid. My,Rd da VEd	Rid. My,Rd da NEd	α	β	ρx	ρy	Verifica
0	SLV 1	0.323	1	-14604	118634.3	1	162147	851642	-3852	409967	1		1				0	0	Si

Verifica a presso/tenso flessione deviata SLD §§ 4.2.4.1.2.3 - 4.2.4.1.2.6 - 4.2.4.1.2.7 - 4.2.4.1.2.8 NTC18

Verifiche eseguite utilizzando la formula conservativa (6.2) §6.2.1 EN 1993-1-1:2005.

X	Comb.	Sfruttamento	Classe	NEd	NRd	Rid. NRd da VEd	Mx,Ed	Mx,Rd	My,Ed	My,Rd	Rid. Mx,Rd da VEd	Rid. Mx,Rd da NEd	Rid. My,Rd da VEd	Rid. My,Rd da NEd	α	β	ρx	ρy	Verifica
0	SLD 1	0.264	1	-14286.8	118634.3	1	118961	851642	-1472	409967	1		1				0	0	Si

Verifiche ad instabilità

Caratteristiche iniziali

Membratura principale per controllo snellezza; Calcolo di snellezze ed N critici condotti secondo gli assi principali;
Curva X: b; Curva Y: c; Svergolamento: Carico all'estradosso; Curva svergolamento: b;

Dati per instabilità attorno a x

Numero rit.	Presente	Ascissa	Campata	βx/m	Vincolo a entrambi estremi	λx/m	λVer
1	Si	0					
			1-2	1	Si	22.9	Si, (<200)
2	Si	170.7					

Dati per instabilità attorno a y

Numero rit.	Presente	Ascissa	Campata	βy/n	k,LT	kw,LT	Vincolo a entrambi estremi	λy/n	λVer
1	Si	0							

Numero rit.	Presente	Ascissa	Campata	βy/n	k,LT	kw,LT	Vincolo a entrambi estremi	λy/n	λVer
			1-2	1	1	1	Si	37.8	Si, (<200)
2	Si	170.7							

Verifica di stabilità per pressoflessione §C.4.2.4.1.3.3.2 NTC18

X	Comb.	Sfruttamento	Classe	NEd	NRk	Mx,Ed max	Mx,Rk	My,Ed max	My,Rk	χ,x	χ,y	kxx	kxy	kyx	kyy	χ,LT	Verifica
0	SLU 132	0.989	1	-45749	124566	482453.6	894223.7	32.7	430465.2	0.977	0.879	0.641	0.453	0.949	0.755	0.978	Si

Verifica di stabilità per pressoflessione SLD §C.4.2.4.1.3.3.2 NTC18

X	Comb.	Sfruttamento	Classe	NEd	NRk	Mx,Ed max	Mx,Rk	My,Ed max	My,Rk	χ,x	χ,y	kxx	kxy	kyx	kyy	χ,LT	Verifica
0	SLD 1	0.28	1	-14286.8	124566	118961.5	894223.7	1472.1	430465.2	0.977	0.879	0.683	0.415	0.986	0.691	0.978	Si

Verifica di stabilità a taglio anima Y §4.2.4.1.2.4 [4.2.27] NTC18

η	hw	tw	hw/tw max	Verifica
1.2	15.2	0.6	55.46	Si

Verifica di stabilità a taglio anima Y SLD §4.2.4.1.2.4 [4.2.27] NTC18

η	hw	tw	hw/tw max	Verifica
1.2	15.2	0.6	55.46	Si

Verifiche a deformabilità

Mensola X: No; Mensola Y: No.

Frecce lungo X

Ascissa freccia	Combinazione	Freccia	Luce	L/f	L/f,min	Tipo	Verifica
74	SLE RA 1	0	170.7	10000	250	Totale	Si
74	SLE RA 31	0	170.7	10000	250	Totale	Si
74	SLE RA 30	0	170.7	10000	250	Totale	Si
74	SLE RA 29	0	170.7	10000	250	Totale	Si
74	SLE RA 28	0	170.7	10000	250	Totale	Si
68.3	SLE RA 2	0	170.7	10000	350	Variabile	Si
74	SLE RA 31	0	170.7	10000	350	Variabile	Si
74	SLE RA 30	0	170.7	10000	350	Variabile	Si
74	SLE RA 29	0	170.7	10000	350	Variabile	Si
74	SLE RA 28	0	170.7	10000	350	Variabile	Si

Frecce lungo Y

Ascissa freccia	Combinazione	Freccia	Luce	L/f	L/f,min	Tipo	Verifica
102.4	SLE RA 33	-0.133	170.7	1279.1	250	Totale	Si
102.4	SLE RA 31	-0.133	170.7	1279.1	250	Totale	Si
102.4	SLE RA 32	-0.133	170.7	1279.1	250	Totale	Si
102.4	SLE RA 30	-0.133	170.7	1279.1	250	Totale	Si
102.4	SLE RA 29	-0.13	170.7	1310.8	250	Totale	Si
108.1	SLE RA 33	-0.067	170.7	2557.7	350	Variabile	Si
108.1	SLE RA 31	-0.067	170.7	2557.7	350	Variabile	Si
108.1	SLE RA 32	-0.067	170.7	2557.7	350	Variabile	Si
108.1	SLE RA 30	-0.067	170.7	2557.7	350	Variabile	Si
108.1	SLE RA 29	-0.063	170.7	2688	350	Variabile	Si

Superelemento in acciaio composto dall'asta 39

Caratteristiche del materiale

Acciaio: S275, fyk = 2750

Caratteristiche geometriche

Lunghezza: 148
Nodo iniziale: 32 Nodo finale: 31
Cerniera iniziale: Svincolo: M2, M3 Cerniera finale: No
Sovraresistenza: 0% Sisma Z: No

Caratteristiche della sezione

Sezione	Rotazione	Area	Jx	Jy	ix	iy	Wx	Wy	Wplx	Wply
HEA160	0	38.82	1674.7	615.62	6.57	3.98	220.36	76.95	245.43	117.67

Verifiche di resistenza

Verifiche a forza assiale §4.2.4.1.2.1 - §4.2.4.1.2.2 NTC18

X	Comb.	Sfruttamento	Classe	NEd	Nc,Rd	Nt,Rd	Riduzione da taglio	ρx	ρy	Verifica
54.3	SLU 129	0.23		23385.1		101662.9	1	0	0	Si

Verifiche a forza assiale SLD §4.2.4.1.2.1 - §4.2.4.1.2.2 NTC18

X	Comb.	Sfruttamento	Classe	NEd	Nc,Rd	Nt,Rd	Riduzione da taglio	ρx	ρy	Verifica
0	SLD 14	0.072		7273.4		101662.9	1	0	0	Si

Verifica a taglio Y §4.2.4.1.2.4 NTC18

X	Comb.	Sfruttamento	VEd	Vc,Rd	Av	Interazione taglio-torsione	Riduzione torsione	Verifica
148	SLV 16	0.043	-854.1	19959.2	13.26	Considerata	1	Si

Verifica a taglio Y SLD §4.2.4.1.2.4 NTC18

X	Comb.	Sfruttamento	VEd	Vc,Rd	Av	Interazione taglio-torsione	Riduzione torsione	Verifica
148	SLD 16	0.021	-417.2	20012.5	13.26	Considerata	1	Si

Verifica a torsione §4.2.4.1.2.5 NTC18

X	Comb.	Sfruttamento torsione	TEd	TRd	Riduzione taglio resistente	Sfruttamento taglio-torsione	τEd,totale	τRd	Verifica
69.1	SLV 12	0.036	523.1	14685.6	Considerata				Si

Verifica a torsione SLD §4.2.4.1.2.5 NTC18

X	Comb.	Sfruttamento torsione	TEd	TRd	Riduzione taglio resistente	Sfruttamento taglio-torsione	τEd,totale	τRd	Verifica
69.1	SLD 12	0.014	199.2	14685.6	Considerata				Si

Verifica a presso/tenso flessione retta X §§ 4.2.4.1.2.3 - 4.2.4.1.2.6 - 4.2.4.1.2.7 - 4.2.4.1.2.8 NTC18

Verifiche eseguite utilizzando la formula conservativa (6.2) §6.2.1 EN 1993-1-1:2005.

X	Comb.	Sfruttamento	Classe	NEd	NRd	Rid. NRd da VEd	Mx,Ed	Mx,Rd	Rid. Mx,Rd da VEd	Rid. Mx,Rd da NEd	ρx	ρy	Verifica
148	SLU 129	0.261	1	23385.1	101662.9	1	19783	642783	1		0	0	Si

Verifica a presso/tenso flessione retta X SLD §§ 4.2.4.1.2.3 - 4.2.4.1.2.6 - 4.2.4.1.2.7 - 4.2.4.1.2.8 NTC18

Verifiche eseguite utilizzando la formula conservativa (6.2) §6.2.1 EN 1993-1-1:2005.

X	Comb.	Sfruttamento	Classe	NEd	NRd	Rid. NRd da VEd	Mx,Ed	Mx,Rd	Rid. Mx,Rd da VEd	Rid. Mx,Rd da NEd	ρx	ρy	Verifica
148	SLD 13	0.162	1	7273.4	101662.9	1	58401	642783	1		0	0	Si

Verifica a presso/tenso flessione deviata §§ 4.2.4.1.2.3 - 4.2.4.1.2.6 - 4.2.4.1.2.7 - 4.2.4.1.2.8 NTC18

Verifiche eseguite utilizzando la formula conservativa (6.2) §6.2.1 EN 1993-1-1:2005.

X	Comb.	Sfruttamento	Classe	NEd	NRd	Rid. NRd da VEd	Mx,Ed	Mx,Rd	My,Ed	My,Rd	Rid. Mx,Rd da VEd	Rid. Mx,Rd da NEd	Rid. My,Rd da VEd	Rid. My,Rd da NEd	α	β	ρx	ρy	Verifica
148	SLV 16	0.278	1	8737	101662.9	1	123067	642783	-159	308186	1		1				0	0	Si

Verifica a presso/tenso flessione deviata SLD §§ 4.2.4.1.2.3 - 4.2.4.1.2.6 - 4.2.4.1.2.7 - 4.2.4.1.2.8 NTC18

Verifiche eseguite utilizzando la formula conservativa (6.2) §6.2.1 EN 1993-1-1:2005.

X	Comb.	Sfruttamento	Classe	NEd	NRd	Rid. NRd da VEd	Mx,Ed	Mx,Rd	My,Ed	My,Rd	Rid. Mx,Rd da VEd	Rid. Mx,Rd da NEd	Rid. My,Rd da VEd	Rid. My,Rd da NEd	α	β	ρx	ρy	Verifica
148	SLD 12	0.098	1	6442.9	101662.9	1	21719	642783	-201	308186	1		1				0	0	Si

Verifiche ad instabilità

Caratteristiche iniziali

Membratura principale per controllo snellezza; Calcolo di snellezze ed N critici condotti secondo gli assi principali;
Curva X: b; Curva Y: c; Svergolamento: Carico all'estradosso; Curva svergolamento: b;

Dati per instabilità attorno a x

Numero rit.	Presente	Ascissa	Campata	βx/m	Vincolo a entrambi estremi	λx/m	λVer
1	Si	0					
			1-2	1	Si	22.5	Si, (<200)
2	Si	148					

Dati per instabilità attorno a y

Numero rit.	Presente	Ascissa	Campata	βy/n	k,LT	kw,LT	Vincolo a entrambi estremi	λy/n	λVer
1	Si	0							
			1-2	1	1	1	Si	37.2	Si, (<200)
2	Si	148							

Verifica a svergolamento con trazione §4.2.4.1.3.2 NTC18 - §5.5.3 ENV 1993-1-1:1994

X	Comb.	Sfruttamento	Classe	Obblig.	NEd	Mx,Ed	Mx,Eff,Ed	Mb,Rd,x	χ,LT	λ adim. LT	L,LT	M,critico	Verifica
69.1	SLV 4	0.061	1	Si	3437.1	-52663.5	-39005.3	642783.4	1	0.278	148	8702008.8	Si

Verifica a svergolamento con trazione SLD §4.2.4.1.3.2 NTC18 - §5.5.3 ENV 1993-1-1:1994

X	Comb.	Sfruttamento	Classe	Obblig.	NEd	Mx,Ed	Mx,Eff,Ed	Mb,Rd,x	χ,LT	λ adim. LT	L,LT	M,critico	Verifica
148	SLD 16	0.046	1	Si	7273.4	58401.3	29498.3	642783.4	1	0.278	148	8702008.8	Si

Verifica di stabilità per tenso-flessione deviata §5.5.3 - §5.5.4 ENV 1993-1-1:1994

X	Comb.	Sfruttamento	Classe	NEd	Mx,Ed	Mx,Eff,Ed	My,Ed	χ,LT	kLT	ky	M,critico	Wx	Wy	Verifica
148	SLV 2	0.152	1	3437.1	-111070.5	-97412.2	159.3	1	1	1	8702008.8	245.4	117.7	Si

Verifica di stabilità a taglio anima Y §4.2.4.1.2.4 [4.2.27] NTC18

η	hw	tw	hw/tw max	Verifica
1.2	13.4	0.6	55.46	Si

Verifica di stabilità a taglio anima Y SLD §4.2.4.1.2.4 [4.2.27] NTC18

η	hw	tw	hw/tw max	Verifica
1.2	13.4	0.6	55.46	Si

Verifiche a deformabilità

Mensola X: No; Mensola Y: No.

Frecce lungo X

Ascissa freccia	Combinazione	Freccia	Luce	L/f	L/f,min	Tipo	Verifica
128.3	SLE RA 1	0	148	10000	250	Totale	Si
93.7	SLE RA 31	0	148	10000	250	Totale	Si
93.7	SLE RA 30	0	148	10000	250	Totale	Si
93.7	SLE RA 29	0	148	10000	250	Totale	Si
93.7	SLE RA 28	0	148	10000	250	Totale	Si
9.9	SLE RA 2	0	148	10000	350	Variabile	Si
88.8	SLE RA 31	0	148	10000	350	Variabile	Si
88.8	SLE RA 30	0	148	10000	350	Variabile	Si
88.8	SLE RA 29	0	148	10000	350	Variabile	Si
88.8	SLE RA 28	0	148	10000	350	Variabile	Si

Frecce lungo Y

Ascissa freccia	Combinazione	Freccia	Luce	L/f	L/f,min	Tipo	Verifica
88.8	SLE RA 1	0.002	148	10000	250	Totale	Si
88.8	SLE RA 31	0.005	148	10000	250	Totale	Si
88.8	SLE RA 30	0.005	148	10000	250	Totale	Si
88.8	SLE RA 29	0.005	148	10000	250	Totale	Si
88.8	SLE RA 28	0.005	148	10000	250	Totale	Si
83.9	SLE RA 2	0	148	10000	350	Variabile	Si
83.9	SLE RA 31	0.003	148	10000	350	Variabile	Si
83.9	SLE RA 30	0.003	148	10000	350	Variabile	Si
83.9	SLE RA 29	0.003	148	10000	350	Variabile	Si
83.9	SLE RA 28	0.003	148	10000	350	Variabile	Si

Superelemento in acciaio composto dall'asta 40

Caratteristiche del materiale

Acciaio: S275, fyk = 2750

Caratteristiche geometriche

Lunghezza: 299
Nodo iniziale: 31 Nodo finale: 30
Cerniera iniziale: No Cerniera finale: No
Sovraresistenza: 0% Sisma Z: No

Caratteristiche della sezione

Sezione	Rotazione	Area	Jx	Jy	ix	iy	Wx	Wy	Wplx	Wply
HEA160	0	38.82	1674.7	615.62	6.57	3.98	220.36	76.95	245.43	117.67

Verifiche di resistenza

Verifiche a forza assiale §4.2.4.1.2.1 - §4.2.4.1.2.2 NTC18

X	Comb.	Sfruttamento	Classe	NEd	Nc,Rd	Nt,Rd	Riduzione da taglio	ρx	ρy	Verifica
279.1	SLU 99	0.327		33213.8		101662.9	1	0	0	Si

Verifiche a forza assiale SLD §4.2.4.1.2.1 - §4.2.4.1.2.2 NTC18

X	Comb.	Sfruttamento	Classe	NEd	Nc,Rd	Nt,Rd	Riduzione da taglio	ρx	ρy	Verifica
299	SLD 8	0.07		7115.7		101662.9	1	0	0	Si

Verifica a taglio Y §4.2.4.1.2.4 NTC18

X	Comb.	Sfruttamento	VEd	Vc,Rd	Av	Interazione taglio-torsione	Riduzione torsione	Verifica
299	SLV 2	0.041	-828.6	20045.7	13.26	Considerata	1	Si

Verifica a taglio Y SLD §4.2.4.1.2.4 NTC18

X	Comb.	Sfruttamento	VEd	Vc,Rd	Av	Interazione taglio-torsione	Riduzione torsione	Verifica
299	SLD 1	0.02	-396.1	20045.7	13.26	Considerata	1	Si

Verifica a presso/tenso flessione retta X §§ 4.2.4.1.2.3 - 4.2.4.1.2.6 - 4.2.4.1.2.7 - 4.2.4.1.2.8 NTC18

Verifiche eseguite utilizzando la formula conservativa (6.2) §6.2.1 EN 1993-1-1:2005.

X	Comb.	Sfruttamento	Classe	NEd	NRd	Rid. NRd da VEd	Mx,Ed	Mx,Rd	Rid. Mx,Rd da VEd	Rid. Mx,Rd da NEd	ρx	ρy	Verifica
0	SLU 99	0.357	1	33213.8	101662.9	1	19783	642783	1		0	0	Si

Verifica a presso/tenso flessione deviata §§ 4.2.4.1.2.3 - 4.2.4.1.2.6 - 4.2.4.1.2.7 - 4.2.4.1.2.8 NTC18

Verifiche eseguite utilizzando la formula conservativa (6.2) §6.2.1 EN 1993-1-1:2005.

X	Comb.	Sfruttamento	Classe	NEd	NRd	Rid. NRd da VEd	Mx,Ed	Mx,Rd	My,Ed	My,Rd	Rid. Mx,Rd da VEd	Rid. Mx,Rd da NEd	Rid. My,Rd da VEd	Rid. My,Rd da NEd	α	β	ρx	ρy	Verifica
299	SLV 4	0.263	1	7115.7	101662.9	1	123067	642783	-457	308186	1		1				0	0	Si

Verifica a presso/tenso flessione deviata SLD §§ 4.2.4.1.2.3 - 4.2.4.1.2.6 - 4.2.4.1.2.7 - 4.2.4.1.2.8 NTC18

Verifiche eseguite utilizzando la formula conservativa (6.2) §6.2.1 EN 1993-1-1:2005.

X	Comb.	Sfruttamento	Classe	NEd	NRd	Rid. NRd da VEd	Mx,Ed	Mx,Rd	My,Ed	My,Rd	Rid. Mx,Rd da VEd	Rid. Mx,Rd da NEd	Rid. My,Rd da VEd	Rid. My,Rd da NEd	α	β	ρx	ρy	Verifica
299	SLD 3	0.161	1	7115.7	101662.9	1	58401	642783	-175	308186	1		1				0	0	Si

Verifiche ad instabilità

Caratteristiche iniziali

Membratura principale per controllo snellezza; Calcolo di snellezze ed N critici condotti secondo gli assi principali;
Curva X: b; Curva Y: c; Svergolamento: Carico all'estradosso; Curva svergolamento: b;

Dati per instabilità attorno a x

Numero rit.	Presente	Ascissa	Campata	βx/m	Vincolo a entrambi estremi	λx/m	λVer
1	Si	0					
			1-2	1	Si	45.5	Si, (<200)
2	Si	299					

Dati per instabilità attorno a y

Numero rit.	Presente	Ascissa	Campata	βy/n	k,LT	kw,LT	Vincolo a entrambi estremi	λy/n	λVer
1	Si	0							
			1-2	1	1	1	Si	75.1	Si, (<200)
2	Si	299							

Verifica di stabilità per tenso-flessione deviata §5.5.3 - §5.5.4 ENV 1993-1-1:1994

X	Comb.	Sfruttamento	Classe	NEd	Mx,Ed	Mx,Eff,Ed	My,Ed	χ,LT	kLT	ky	M,critico	Wx	Wy	Verifica
0	SLV 16	0.178	1	7115.7	123067.1	94791.1	-457.1	0.836	1	1	1151208.3	245.4	117.7	Si

Verifica di stabilità per tenso-flessione deviata SLD §5.5.3 - §5.5.4 ENV 1993-1-1:1994

X	Comb.	Sfruttamento	Classe	NEd	Mx,Ed	Mx,Eff,Ed	My,Ed	χ,LT	kLT	ky	M,critico	Wx	Wy	Verifica
0	SLD 16	0.057	1	7115.7	58401.3	30125.3	-174.8	0.836	1	1	1151208.3	245.4	117.7	Si

Verifica di stabilità a taglio anima Y §4.2.4.1.2.4 [4.2.27] NTC18

η	hw	tw	hw/tw max	Verifica
1.2	13.4	0.6	55.46	Si

Verifica di stabilità a taglio anima Y SLD §4.2.4.1.2.4 [4.2.27] NTC18

η	hw	tw	hw/tw max	Verifica
1.2	13.4	0.6	55.46	Si

Verifiche a deformabilità

Mensola X: No; Mensola Y: No.

Frecce lungo X

Ascissa freccia	Combinazione	Freccia	Luce	L/f	L/f,min	Tipo	Verifica
149.5	SLE RA 1	0	299	10000	250	Totale	Si
149.5	SLE RA 31	0	299	10000	250	Totale	Si
149.5	SLE RA 30	0	299	10000	250	Totale	Si
149.5	SLE RA 29	0	299	10000	250	Totale	Si
149.5	SLE RA 28	0	299	10000	250	Totale	Si
149.5	SLE RA 2	0	299	10000	350	Variabile	Si
149.5	SLE RA 31	0	299	10000	350	Variabile	Si
149.5	SLE RA 30	0	299	10000	350	Variabile	Si
149.5	SLE RA 29	0	299	10000	350	Variabile	Si
149.5	SLE RA 28	0	299	10000	350	Variabile	Si

Frecce lungo Y

Ascissa freccia	Combinazione	Freccia	Luce	L/f	L/f,min	Tipo	Verifica
149.5	SLE RA 33	0.034	299	8685.7	250	Totale	Si
149.5	SLE RA 31	0.034	299	8685.7	250	Totale	Si
149.5	SLE RA 32	0.034	299	8685.7	250	Totale	Si
149.5	SLE RA 30	0.034	299	8685.7	250	Totale	Si
149.5	SLE RA 29	0.033	299	8985.2	250	Totale	Si
149.5	SLE RA 2	0	299	10000	350	Variabile	Si
149.5	SLE RA 31	0.025	299	10000	350	Variabile	Si
149.5	SLE RA 30	0.025	299	10000	350	Variabile	Si
149.5	SLE RA 29	0.024	299	10000	350	Variabile	Si
149.5	SLE RA 28	0.024	299	10000	350	Variabile	Si

Superelemento in acciaio composto dall'asta 41

Caratteristiche del materiale

Acciaio: S275, fyk = 2750

Caratteristiche geometriche

Lunghezza: 148
Nodo iniziale: 30 Nodo finale: 29
Cerniera iniziale: No Cerniera finale: Svincolo: M2, M3
Sovraresistenza: 0% Sisma Z: No

Caratteristiche della sezione

Sezione	Rotazione	Area	Jx	Jy	ix	iy	Wx	Wy	Wplx	Wply
HEA160	0	38.82	1674.7	615.62	6.57	3.98	220.36	76.95	245.43	117.67

Verifiche di resistenza

Verifiche a forza assiale §4.2.4.1.2.1 - §4.2.4.1.2.2 NTC18

X	Comb.	Sfruttamento	Classe	NEd	Nc,Rd	Nt,Rd	Riduzione da taglio	ρx	ρy	Verifica
74	SLU 129	0.23		23375.4		101662.9	1	0	0	Si

Verifiche a forza assiale SLD §4.2.4.1.2.1 - §4.2.4.1.2.2 NTC18

X	Comb.	Sfruttamento	Classe	NEd	Nc,Rd	Nt,Rd	Riduzione da taglio	ρx	ρy	Verifica
0	SLD 1	0.072		7273.4		101662.9	1	0	0	Si

Verifica a taglio Y §4.2.4.1.2.4 NTC18

X	Comb.	Sfruttamento	VEd	Vc,Rd	Av	Interazione taglio-torsione	Riduzione torsione	Verifica
0	SLV 3	0.043	854.1	19959.2	13.26	Considerata	1	Si

Verifica a taglio Y SLD §4.2.4.1.2.4 NTC18

X	Comb.	Sfruttamento	VEd	Vc,Rd	Av	Interazione taglio-torsione	Riduzione torsione	Verifica
0	SLD 3	0.021	417.2	20012.5	13.26	Considerata	1	Si

Verifica a torsione §4.2.4.1.2.5 NTC18

X	Comb.	Sfruttamento torsione	TEd	TRd	Riduzione taglio resistente	Sfruttamento taglio-torsione	τEd,totale	τRd	Verifica
148	SLV 8	0.036	-523.1	14685.6	Considerata				Si

Verifica a torsione SLD §4.2.4.1.2.5 NTC18

X	Comb.	Sfruttamento torsione	TEd	TRd	Riduzione taglio resistente	Sfruttamento taglio-torsione	τEd,totale	τRd	Verifica
148	SLD 8	0.014	-199.2	14685.6	Considerata				Si

Verifica a presso/tenso flessione retta X §§ 4.2.4.1.2.3 - 4.2.4.1.2.6 - 4.2.4.1.2.7 - 4.2.4.1.2.8 NTC18

Verifiche eseguite utilizzando la formula conservativa (6.2) §6.2.1 EN 1993-1-1:2005.

X	Comb.	Sfruttamento	Classe	NEd	NRd	Rid. NRd da VEd	Mx,Ed	Mx,Rd	Rid. Mx,Rd da VEd	Rid. Mx,Rd da NEd	ρx	ρy	Verifica
0	SLU 129	0.26	1	23375.4	101662.9	1	19281	642783	1		0	0	Si

Verifica a presso/tenso flessione retta X SLD §§ 4.2.4.1.2.3 - 4.2.4.1.2.6 - 4.2.4.1.2.7 - 4.2.4.1.2.8 NTC18

Verifiche eseguite utilizzando la formula conservativa (6.2) §6.2.1 EN 1993-1-1:2005.

X	Comb.	Sfruttamento	Classe	NEd	NRd	Rid. NRd da VEd	Mx,Ed	Mx,Rd	Rid. Mx,Rd da VEd	Rid. Mx,Rd da NEd	ρx	ρy	Verifica
0	SLD 1	0.162	1	7273.4	101662.9	1	58401	642783	1		0	0	Si

Verifica a presso/tenso flessione deviata §§ 4.2.4.1.2.3 - 4.2.4.1.2.6 - 4.2.4.1.2.7 - 4.2.4.1.2.8 NTC18

Verifiche eseguite utilizzando la formula conservativa (6.2) §6.2.1 EN 1993-1-1:2005.

X	Comb.	Sfruttamento	Classe	NEd	NRd	Rid. NRd da VEd	Mx,Ed	Mx,Rd	My,Ed	My,Rd	Rid. Mx,Rd da VEd	Rid. Mx,Rd da NEd	Rid. My,Rd da VEd	Rid. My,Rd da NEd	α	β	ρx	ρy	Verifica
0	SLV 4	0.278	1	8737	101662.9	1	123067	642783	-159	308186	1		1				0	0	Si

Verifica a presso/tenso flessione deviata SLD §§ 4.2.4.1.2.3 - 4.2.4.1.2.6 - 4.2.4.1.2.7 - 4.2.4.1.2.8 NTC18

Verifiche eseguite utilizzando la formula conservativa (6.2) §6.2.1 EN 1993-1-1:2005.

X	Comb.	Sfruttamento	Classe	NEd	NRd	Rid. NRd da VEd	Mx,Ed	Mx,Rd	My,Ed	My,Rd	Rid. Mx,Rd da VEd	Rid. Mx,Rd da NEd	Rid. My,Rd da VEd	Rid. My,Rd da NEd	α	β	ρx	ρy	Verifica
0	SLD 7	0.098	1	6442.9	101662.9	1	21719	642783	-201	308186	1		1				0	0	Si

Verifiche ad instabilità

Caratteristiche iniziali

Membratura principale per controllo snellezza; Calcolo di snellezze ed N critici condotti secondo gli assi principali;
Curva X: b; Curva Y: c; Svergolamento: Carico all'estradosso; Curva svergolamento: b;

Dati per instabilità attorno a x

Numero rit.	Presente	Ascissa	Campata	βx/m	Vincolo a entrambi estremi	λx/m	λVer
1	Si	0					
			1-2	1	Si	22.5	Si, (<200)
2	Si	148					

Dati per instabilità attorno a y

Numero rit.	Presente	Ascissa	Campata	βy/n	k,LT	kw,LT	Vincolo a entrambi estremi	λy/n	λVer
1	Si	0							
			1-2	1	1	1	Si	37.2	Si, (<200)
2	Si	148							

Verifica a svergolamento con trazione §4.2.4.1.3.2 NTC18 - §5.5.3 ENV 1993-1-1:1994

X	Comb.	Sfruttamento	Classe	Obblig.	NEd	Mx,Ed	Mx,Eff,Ed	Mb,Rd,x	χ,LT	λ adim. LT	L,LT	M,critico	Verifica
78.9	SLV 16	0.061	1	Si	3437.1	-52663.5	-39005.3	642783.4	1	0.278	148	8702008.8	Si

Verifica a svergolamento con trazione SLD §4.2.4.1.3.2 NTC18 - §5.5.3 ENV 1993-1-1:1994

X	Comb.	Sfruttamento	Classe	Obblig.	NEd	Mx,Ed	Mx,Eff,Ed	Mb,Rd,x	χ,LT	λ adim. LT	L,LT	M,critico	Verifica
0	SLD 4	0.046	1	Si	7273.4	58401.3	29498.3	642783.4	1	0.278	148	8702008.8	Si

Verifica di stabilità per tenso-flessione deviata §5.5.3 - §5.5.4 ENV 1993-1-1:1994

X	Comb.	Sfruttamento	Classe	NEd	Mx,Ed	Mx,Eff,Ed	My,Ed	χ,LT	kLT	ky	M,critico	Wx	Wy	Verifica
0	SLV 13	0.152	1	3437.1	-111070.5	-97412.2	159.3	1	1	1	8702008.8	245.4	117.7	Si

Verifica di stabilità a taglio anima Y §4.2.4.1.2.4 [4.2.27] NTC18

η	hw	tw	hw/tw max	Verifica
1.2	13.4	0.6	55.46	Si

Verifica di stabilità a taglio anima Y SLD §4.2.4.1.2.4 [4.2.27] NTC18

η	hw	tw	hw/tw max	Verifica
1.2	13.4	0.6	55.46	Si

Verifiche a deformabilità

Mensola X: No; Mensola Y: No.

Frecce lungo X

Ascissa freccia	Combinazione	Freccia	Luce	L/f	L/f,min	Tipo	Verifica
19.7	SLE RA 1	0	148	10000	250	Totale	Si
69.1	SLE RA 31	0	148	10000	250	Totale	Si
69.1	SLE RA 30	0	148	10000	250	Totale	Si
69.1	SLE RA 29	0	148	10000	250	Totale	Si
69.1	SLE RA 28	0	148	10000	250	Totale	Si

Ascissa freccia	Combinazione	Freccia	Luce	L/f	L/f,min	Tipo	Verifica
138.1	SLE RA 2	0	148	10000	350	Variabile	Si
54.3	SLE RA 31	0	148	10000	350	Variabile	Si
54.3	SLE RA 30	0	148	10000	350	Variabile	Si
54.3	SLE RA 29	0	148	10000	350	Variabile	Si
54.3	SLE RA 28	0	148	10000	350	Variabile	Si

Frecce lungo Y

Ascissa freccia	Combinazione	Freccia	Luce	L/f	L/f,min	Tipo	Verifica
59.2	SLE RA 1	0.002	148	10000	250	Totale	Si
59.2	SLE RA 31	0.005	148	10000	250	Totale	Si
59.2	SLE RA 30	0.005	148	10000	250	Totale	Si
59.2	SLE RA 29	0.005	148	10000	250	Totale	Si
59.2	SLE RA 28	0.005	148	10000	250	Totale	Si
64.1	SLE RA 2	0	148	10000	350	Variabile	Si
64.1	SLE RA 31	0.003	148	10000	350	Variabile	Si
64.1	SLE RA 30	0.003	148	10000	350	Variabile	Si
64.1	SLE RA 29	0.003	148	10000	350	Variabile	Si
64.1	SLE RA 28	0.003	148	10000	350	Variabile	Si

Superelemento in acciaio composto dall'asta 42

Caratteristiche del materiale

Acciaio: S275, fyk = 2750

Caratteristiche geometriche

Lunghezza: 215.2
Nodo iniziale: 5 Nodo finale: 31
Cerniera iniziale: Svincolo: M2, M3 Cerniera finale: Svincolo: M2, M3
Sovraresistenza: 0% Sisma Z: No

Caratteristiche della sezione

Sezione	Rotazione	Area	Jx	Jy	ix	iy	Wx	Wy	Wplx	Wply
HEA160	0	38.82	1674.7	615.62	6.57	3.98	220.36	76.95	245.43	117.67

Verifiche di resistenza

Verifiche a forza assiale §4.2.4.1.2.1 - §4.2.4.1.2.2 NTC18

X	Comb.	Sfruttamento	Classe	NEd	Nc,Rd	Nt,Rd	Riduzione da taglio	ρx	ρy	Verifica
215.2	SLU 132	0.053		5346.8		101662.9	1	0	0	Si

Verifiche a forza assiale SLD §4.2.4.1.2.1 - §4.2.4.1.2.2 NTC18

X	Comb.	Sfruttamento	Classe	NEd	Nc,Rd	Nt,Rd	Riduzione da taglio	ρx	ρy	Verifica
215.2	SLD 4	0.018		1867.6		101662.9	1	0	0	Si

Verifica a taglio Y §4.2.4.1.2.4 NTC18

X	Comb.	Sfruttamento	VEd	Vc,Rd	Av	Interazione taglio-torsione	Riduzione torsione	Verifica
0	SLU 96	0.002	37.7	20045.7	13.26	Considerata	1	Si

Verifica a taglio Y SLD §4.2.4.1.2.4 NTC18

X	Comb.	Sfruttamento	VEd	Vc,Rd	Av	Interazione taglio-torsione	Riduzione torsione	Verifica
215.2	SLD 8	0.001	-29	19889.7	13.26	Considerata	0.99	Si

Verifica a torsione §4.2.4.1.2.5 NTC18

X	Comb.	Sfruttamento torsione	TEd	TRd	Riduzione taglio resistente	Sfruttamento taglio-torsione	τEd,totale	τRd	Verifica
215.2	SLV 8	0.051	747.6	14685.6	Considerata				Si

Verifica a torsione SLD §4.2.4.1.2.5 NTC18

X	Comb.	Sfruttamento torsione	TEd	TRd	Riduzione taglio resistente	Sfruttamento taglio-torsione	τEd,totale	τRd	Verifica
215.2	SLD 8	0.019	284.6	14685.6	Considerata				Si

Verifica a flessione semplice X SLD §§ 4.2.4.1.2.3 - 4.2.4.1.2.6 - 4.2.4.1.2.7 - 4.2.4.1.2.8 NTC18

X	Comb.	Sfruttamento	Classe	Mx,Ed	Mx,Rd	Rid. Mx,Rd da VEd	ρx	ρy	Verifica
107.6	SLD 9	0.002	1	-1561.1	642783.4	1	0	0	Si

Verifica a presso/tenso flessione retta X §§ 4.2.4.1.2.3 - 4.2.4.1.2.6 - 4.2.4.1.2.7 - 4.2.4.1.2.8 NTC18

Verifiche eseguite utilizzando la formula conservativa (6.2) §6.2.1 EN 1993-1-1:2005.

X	Comb.	Sfruttamento	Classe	NEd	NRd	Rid. NRd da VEd	Mx,Ed	Mx,Rd	Rid. Mx,Rd da VEd	Rid. Mx,Rd da NEd	ρx	ρy	Verifica
107.6	SLU 99	0.056	1	5327	101662.9	1	-2029	642783	1		0	0	Si

Verifica a presso/tenso flessione retta X SLD §§ 4.2.4.1.2.3 - 4.2.4.1.2.6 - 4.2.4.1.2.7 - 4.2.4.1.2.8 NTC18

Verifiche eseguite utilizzando la formula conservativa (6.2) §6.2.1 EN 1993-1-1:2005.

X	Comb.	Sfruttamento	Classe	NEd	NRd	Rid. NRd da VEd	Mx,Ed	Mx,Rd	Rid. Mx,Rd da VEd	Rid. Mx,Rd da NEd	ρx	ρy	Verifica
107.6	SLD 4	0.021	1	1852.4	101662.9	1	-1561	642783	1		0	0	Si

Verifiche ad instabilità

Caratteristiche iniziali

Membratura principale per controllo snellezza; Calcolo di snellezze ed N critici condotti secondo gli assi principali;
Curva X: b; Curva Y: c; Svergolamento: Carico all'estradosso; Curva svergolamento: b;

Dati per instabilità attorno a x

Numero rit.	Presente	Ascissa	Campata	βx/m	Vincolo a entrambi estremi	λx/m	λVer
1	Si	0					
			1-2	1	Si	32.8	Si, (<200)
2	Si	215.2					

Dati per instabilità attorno a y

Numero rit.	Presente	Ascissa	Campata	βy/n	k,LT	kw,LT	Vincolo a entrambi estremi	λy/n	λVer
1	Si	0							
			1-2	1	1	1	Si	54	Si, (<200)
2	Si	215.2							

Verifica a svergolamento SLD §4.2.4.1.3.2 NTC18

X	Comb.	Sfruttamento	Classe	Obblig.	Mx,Ed	Mb,Rd,x	χ,LT	λ adim. LT	L,LT	M,critico	Verifica
107.6	SLD 9	0.003	1	Si	-1561.1	588430.1	0.915	0.604	215.2	1851896.4	Si

Verifica di stabilità per pressoflessione §C.4.2.4.1.3.3.2 NTC18

X	Comb.	Sfruttamento	Classe	NEd	NRk	Mx,Ed max	Mx,Rk	My,Ed max	My,Rk	χ,x	χ,y	kxx	kxy	kyx	kyy	χ,LT	Verifica
0	SLV 14	0.038	1	-2787	106746.1	1561.1	674922.6	1.1	323595.1	0.935	0.772	0.955	0.583	0.997	0.972	0.915	Si

Verifica di stabilità per pressoflessione SLD §C.4.2.4.1.3.3.2 NTC18

X	Comb.	Sfruttamento	Classe	NEd	NRk	Mx,Ed max	Mx,Rk	My,Ed max	My,Rk	χ,x	χ,y	kxx	kxy	kyx	kyy	χ,LT	Verifica
0	SLD 13	0.016	1	-1022.6	106746.1	1561.1	674922.6	1.1	323595.1	0.935	0.772	0.952	0.575	0.999	0.958	0.915	Si

Verifica di stabilità a taglio anima Y §4.2.4.1.2.4 [4.2.27] NTC18

η	hw	tw	hw/tw max	Verifica
1.2	13.4	0.6	55.46	Si

Verifica di stabilità a taglio anima Y SLD §4.2.4.1.2.4 [4.2.27] NTC18

η	hw	tw	hw/tw max	Verifica
1.2	13.4	0.6	55.46	Si

Verifiche a deformabilità

Mensola X: No; Mensola Y: No.

Frecce lungo X

Ascissa freccia	Combinazione	Freccia	Luce	L/f	L/f,min	Tipo	Verifica
107.6	SLE RA 1	0	215.2	10000	250	Totale	Si
107.6	SLE RA 31	0	215.2	10000	250	Totale	Si
107.6	SLE RA 30	0	215.2	10000	250	Totale	Si
107.6	SLE RA 29	0	215.2	10000	250	Totale	Si
107.6	SLE RA 28	0	215.2	10000	250	Totale	Si
129.1	SLE RA 2	0	215.2	10000	350	Variabile	Si
193.6	SLE RA 31	0	215.2	10000	350	Variabile	Si
193.6	SLE RA 30	0	215.2	10000	350	Variabile	Si
193.6	SLE RA 29	0	215.2	10000	350	Variabile	Si
193.6	SLE RA 28	0	215.2	10000	350	Variabile	Si

Frecce lungo Y

Ascissa freccia	Combinazione	Freccia	Luce	L/f	L/f,min	Tipo	Verifica
107.6	SLE RA 1	-0.002	215.2	10000	250	Totale	Si
107.6	SLE RA 31	-0.002	215.2	10000	250	Totale	Si
107.6	SLE RA 30	-0.002	215.2	10000	250	Totale	Si
107.6	SLE RA 29	-0.002	215.2	10000	250	Totale	Si
107.6	SLE RA 28	-0.002	215.2	10000	250	Totale	Si
200.8	SLE RA 2	0	215.2	10000	350	Variabile	Si
179.3	SLE RA 31	0	215.2	10000	350	Variabile	Si
179.3	SLE RA 30	0	215.2	10000	350	Variabile	Si
208	SLE RA 29	0	215.2	10000	350	Variabile	Si
208	SLE RA 28	0	215.2	10000	350	Variabile	Si

Superelemento in acciaio composto dall'asta 43

Caratteristiche del materiale

Acciaio: S275, fyk = 2750

Caratteristiche geometriche

Lunghezza: 215.2
Nodo iniziale: 4 Nodo finale: 30
Cerniera iniziale: Svincolo: M2, M3 Cerniera finale: Svincolo: M2, M3
Sovraresistenza: 0% Sisma Z: No

Caratteristiche della sezione

Sezione	Rotazione	Area	Jx	Jy	ix	iy	Wx	Wy	Wplx	Wply
HEA160	0	38.82	1674.7	615.62	6.57	3.98	220.36	76.95	245.43	117.67

Verifiche di resistenza

Verifiche a forza assiale §4.2.4.1.2.1 - §4.2.4.1.2.2 NTC18

X	Comb.	Sfruttamento	Classe	NEd	Nc,Rd	Nt,Rd	Riduzione da taglio	ρx	ρy	Verifica
215.2	SLU 99	0.053		5359.5		101662.9	1	0	0	Si

Verifiche a forza assiale SLD §4.2.4.1.2.1 - §4.2.4.1.2.2 NTC18

X	Comb.	Sfruttamento	Classe	NEd	Nc,Rd	Nt,Rd	Riduzione da taglio	ρx	ρy	Verifica
215.2	SLD 16	0.018		1867.6		101662.9	1	0	0	Si

Verifica a taglio Y §4.2.4.1.2.4 NTC18

X	Comb.	Sfruttamento	VEd	Vc,Rd	Av	Interazione taglio-torsione	Riduzione torsione	Verifica
0	SLU 97	0.002	37.7	20045.7	13.26	Considerata	1	Si

Verifica a taglio Y SLD §4.2.4.1.2.4 NTC18

X	Comb.	Sfruttamento	VEd	Vc,Rd	Av	Interazione taglio-torsione	Riduzione torsione	Verifica
215.2	SLD 12	0.001	-29	19889.7	13.26	Considerata	0.99	Si

Verifica a torsione §4.2.4.1.2.5 NTC18

X	Comb.	Sfruttamento torsione	TEd	TRd	Riduzione taglio resistente	Sfruttamento taglio-torsione	τEd,totale	τRd	Verifica
100.4	SLV 12	0.051	-747.6	14685.6	Considerata				Si

Verifica a torsione SLD §4.2.4.1.2.5 NTC18

X	Comb.	Sfruttamento torsione	TEd	TRd	Riduzione taglio resistente	Sfruttamento taglio-torsione	τEd,totale	τRd	Verifica
100.4	SLD 12	0.019	-284.6	14685.6	Considerata				Si

Verifica a flessione semplice X SLD §§ 4.2.4.1.2.3 - 4.2.4.1.2.6 - 4.2.4.1.2.7 - 4.2.4.1.2.8 NTC18

X	Comb.	Sfruttamento	Classe	Mx,Ed	Mx,Rd	Rid. Mx,Rd da VEd	ρx	ρy	Verifica
107.6	SLD 5	0.002	1	-1561.1	642783.4	1	0	0	Si

Verifica a presso/tenso flessione retta X §§ 4.2.4.1.2.3 - 4.2.4.1.2.6 - 4.2.4.1.2.7 - 4.2.4.1.2.8 NTC18

Verifiche eseguite utilizzando la formula conservativa (6.2) §6.2.1 EN 1993-1-1:2005.

X	Comb.	Sfruttamento	Classe	NEd	NRd	Rid. NRd da VEd	Mx,Ed	Mx,Rd	Rid. Mx,Rd da VEd	Rid. Mx,Rd da NEd	ρx	ρy	Verifica
107.6	SLU 132	0.056	1	5339.7	101662.9	1	-2029	642783	1		0	0	Si

Verifica a presso/tenso flessione retta X SLD §§ 4.2.4.1.2.3 - 4.2.4.1.2.6 - 4.2.4.1.2.7 - 4.2.4.1.2.8 NTC18

Verifiche eseguite utilizzando la formula conservativa (6.2) §6.2.1 EN 1993-1-1:2005.

X	Comb.	Sfruttamento	Classe	NEd	NRd	Rid. NRd da VEd	Mx,Ed	Mx,Rd	Rid. Mx,Rd da VEd	Rid. Mx,Rd da NEd	ρx	ρy	Verifica
107.6	SLD 15	0.021	1	1852.4	101662.9	1	-1561	642783	1		0	0	Si

Verifiche ad instabilità

Caratteristiche iniziali

Membratura principale per controllo snellezza; Calcolo di snellezze ed N critici condotti secondo gli assi principali;
Curva X: b; Curva Y: c; Svergolamento: Carico all'estradosso; Curva svergolamento: b;

Dati per instabilità attorno a x

Numero rit.	Presente	Ascissa	Campata	βx/m	Vincolo a entrambi estremi	λx/m	λVer
1	Si	0					
			1-2	1	Si	32.8	Si, (<200)
2	Si	215.2					

Dati per instabilità attorno a y

Numero rit.	Presente	Ascissa	Campata	βy/n	k,LT	kw,LT	Vincolo a entrambi estremi	λy/n	λVer
1	Si	0							
			1-2	1	1	1	Si	54	Si, (<200)
2	Si	215.2							

Verifica a svergolamento SLD §4.2.4.1.3.2 NTC18

X	Comb.	Sfruttamento	Classe	Obblig.	Mx,Ed	Mb,Rd,x	χ,LT	λ adim. LT	L,LT	M,critico	Verifica
107.6	SLD 5	0.003	1	Si	-1561.1	588430.3	0.915	0.604	215.2	1851899.2	Si

Verifica di stabilità per pressoflessione §C.4.2.4.1.3.3.2 NTC18

X	Comb.	Sfruttamento	Classe	NEd	NRk	Mx,Ed max	Mx,Rk	My,Ed max	My,Rk	χ,x	χ,y	kxx	kxy	kyx	kyy	χ,LT	Verifica
0	SLV 1	0.038	1	-2787	106746.1	1561.1	674922.6	0	323595.1	0.935	0.772	0.955	0.368	0.997	0.614	0.915	Si

Verifica di stabilità per pressoflessione SLD §C.4.2.4.1.3.3.2 NTC18

X	Comb.	Sfruttamento	Classe	NEd	NRk	Mx,Ed max	Mx,Rk	My,Ed max	My,Rk	χ,x	χ,y	kxx	kxy	kyx	kyy	χ,LT	Verifica
0	SLD 1	0.016	1	-1022.6	106746.1	1561.1	674922.6	0	323595.1	0.935	0.772	0.952	0.363	0.999	0.605	0.915	Si

Verifica di stabilità a taglio anima Y §4.2.4.1.2.4 [4.2.27] NTC18

η	hw	tw	hw/tw max	Verifica
1.2	13.4	0.6	55.46	Si

Verifica di stabilità a taglio anima Y SLD §4.2.4.1.2.4 [4.2.27] NTC18

η	hw	tw	hw/tw max	Verifica
1.2	13.4	0.6	55.46	Si

Verifiche a deformabilità

Mensola X: No; Mensola Y: No.

Frecce lungo X

Ascissa freccia	Combinazione	Freccia	Luce	L/f	L/f,min	Tipo	Verifica
172.1	SLE RA 1	0	215.2	10000	250	Totale	Si
172.1	SLE RA 31	0	215.2	10000	250	Totale	Si
172.1	SLE RA 30	0	215.2	10000	250	Totale	Si
193.6	SLE RA 29	0	215.2	10000	250	Totale	Si
193.6	SLE RA 28	0	215.2	10000	250	Totale	Si
193.6	SLE RA 2	0	215.2	10000	350	Variabile	Si
193.6	SLE RA 31	0	215.2	10000	350	Variabile	Si
193.6	SLE RA 30	0	215.2	10000	350	Variabile	Si
193.6	SLE RA 29	0	215.2	10000	350	Variabile	Si
193.6	SLE RA 28	0	215.2	10000	350	Variabile	Si

Frecce lungo Y

Ascissa freccia	Combinazione	Freccia	Luce	L/f	L/f,min	Tipo	Verifica
107.6	SLE RA 1	-0.002	215.2	10000	250	Totale	Si
107.6	SLE RA 31	-0.002	215.2	10000	250	Totale	Si
107.6	SLE RA 30	-0.002	215.2	10000	250	Totale	Si
107.6	SLE RA 29	-0.002	215.2	10000	250	Totale	Si
107.6	SLE RA 28	-0.002	215.2	10000	250	Totale	Si
200.8	SLE RA 2	0	215.2	10000	350	Variabile	Si
193.6	SLE RA 31	0	215.2	10000	350	Variabile	Si
193.6	SLE RA 30	0	215.2	10000	350	Variabile	Si
193.6	SLE RA 29	0	215.2	10000	350	Variabile	Si
193.6	SLE RA 28	0	215.2	10000	350	Variabile	Si

Superelemento in acciaio composto dall'asta 44

Caratteristiche del materiale

Acciaio: S275, fyk = 2750

Caratteristiche geometriche

Lunghezza: 105.1
Nodo iniziale: 31 Nodo finale: 72
Cerniera iniziale: Svincolo: M2, M3 Cerniera finale: Svincolo: M2, M3
Sovraresistenza: 0% Sisma Z: No

Caratteristiche della sezione

Sezione	Rotazione	Area	Jx	Jy	ix	iy	Wx	Wy	Wplx	Wply
HEA160	0	38.82	1674.7	615.62	6.57	3.98	220.36	76.95	245.43	117.67

Verifiche di resistenza

Verifiche a forza assiale §4.2.4.1.2.1 - §4.2.4.1.2.2 NTC18

X	Comb.	Sfruttamento	Classe	NEd	Nc,Rd	Nt,Rd	Riduzione da taglio	ρx	ρy	Verifica
105.1	SLU 99	0.057		5821		101662.9	1	0	0	Si

Verifiche a forza assiale SLD §4.2.4.1.2.1 - §4.2.4.1.2.2 NTC18

X	Comb.	Sfruttamento	Classe	NEd	Nc,Rd	Nt,Rd	Riduzione da taglio	ρx	ρy	Verifica
105.1	SLD 16	0.008		851.2		101662.9	1	0	0	Si

Verifica a taglio Y §4.2.4.1.2.4 NTC18

X	Comb.	Sfruttamento	VEd	Vc,Rd	Av	Interazione taglio-torsione	Riduzione torsione	Verifica
0	SLU 130	0.001	18.3	20045.7	13.26	Considerata	1	Si

Verifica a taglio Y SLD §4.2.4.1.2.4 NTC18

X	Comb.	Sfruttamento	VEd	Vc,Rd	Av	Interazione taglio-torsione	Riduzione torsione	Verifica
0	SLD 8	0.001	14.1	19763.7	13.26	Considerata	0.99	Si

Verifica a torsione §4.2.4.1.2.5 NTC18

X	Comb.	Sfruttamento torsione	TEd	TRd	Riduzione taglio resistente	Sfruttamento taglio-torsione	τEd,totale	τRd	Verifica
105.1	SLV 8	0.092	-1347	14685.6	Considerata				Si

Verifica a torsione SLD §4.2.4.1.2.5 NTC18

X	Comb.	Sfruttamento torsione	TEd	TRd	Riduzione taglio resistente	Sfruttamento taglio-torsione	τEd,totale	τRd	Verifica
105.1	SLD 8	0.035	-512.8	14685.6	Considerata				Si

Verifica a presso/tenso flessione retta X §§ 4.2.4.1.2.3 - 4.2.4.1.2.6 - 4.2.4.1.2.7 - 4.2.4.1.2.8 NTC18

Verifiche eseguite utilizzando la formula conservativa (6.2) §6.2.1 EN 1993-1-1:2005.

X	Comb.	Sfruttamento	Classe	NEd	NRd	Rid. NRd da VEd	Mx,Ed	Mx,Rd	Rid. Mx,Rd da VEd	Rid. Mx,Rd da NEd	ρx	ρy	Verifica
56.1	SLU 99	0.058	1	5811.7	101662.9	1	-479	642783	1		0	0	Si

Verifica a presso/tenso flessione retta X SLD §§ 4.2.4.1.2.3 - 4.2.4.1.2.6 - 4.2.4.1.2.7 - 4.2.4.1.2.8 NTC18

Verifiche eseguite utilizzando la formula conservativa (6.2) §6.2.1 EN 1993-1-1:2005.

X	Comb.	Sfruttamento	Classe	NEd	NRd	Rid. NRd da VEd	Mx,Ed	Mx,Rd	Rid. Mx,Rd da VEd	Rid. Mx,Rd da NEd	ρx	ρy	Verifica
56.1	SLD 15	0.009	1	844.1	101662.9	1	-369	642783	1		0	0	Si

Verifiche ad instabilità

Caratteristiche iniziali

Membratura principale per controllo snellezza; Calcolo di snellezze ed N critici condotti secondo gli assi principali;
Curva X: b; Curva Y: c; Svergolamento: Carico all'estradosso; Curva svergolamento: b;

Dati per instabilità attorno a x

Numero rit.	Presente	Ascissa	Campata	βx/m	Vincolo a entrambi estremi	λx/m	λVer
1	Si	0					
			1-2	1	Si	16	Si, (<200)
2	Si	105.1					

Dati per instabilità attorno a y

Numero rit.	Presente	Ascissa	Campata	βy/n	k,LT	kw,LT	Vincolo a entrambi estremi	λy/n	λVer
1	Si	0							
			1-2	1	1	1	Si	26.4	Si, (<200)
2	Si	105.1							

Verifica di stabilità a taglio anima Y §4.2.4.1.2.4 [4.2.27] NTC18

η	hw	tw	hw/tw max	Verifica
1.2	13.4	0.6	55.46	Si

Verifica di stabilità a taglio anima Y SLD §4.2.4.1.2.4 [4.2.27] NTC18

η	hw	tw	hw/tw max	Verifica
1.2	13.4	0.6	55.46	Si

Verifiche a deformabilità

Mensola X: No; Mensola Y: No.

Frecce lungo X

Ascissa freccia	Combinazione	Freccia	Luce	L/f	L/f,min	Tipo	Verifica
42.1	SLE RA 1	0	105.1	10000	250	Totale	Si
35	SLE RA 31	0	105.1	10000	250	Totale	Si
35	SLE RA 30	0	105.1	10000	250	Totale	Si
42.1	SLE RA 29	0	105.1	10000	250	Totale	Si
42.1	SLE RA 28	0	105.1	10000	250	Totale	Si
84.1	SLE RA 2	0	105.1	10000	350	Variabile	Si
21	SLE RA 31	0	105.1	10000	350	Variabile	Si
21	SLE RA 30	0	105.1	10000	350	Variabile	Si
21	SLE RA 29	0	105.1	10000	350	Variabile	Si
21	SLE RA 28	0	105.1	10000	350	Variabile	Si

Frecce lungo Y

Ascissa freccia	Combinazione	Freccia	Luce	L/f	L/f,min	Tipo	Verifica
52.6	SLE RA 1	0	105.1	10000	250	Totale	Si
52.6	SLE RA 31	0	105.1	10000	250	Totale	Si
52.6	SLE RA 30	0	105.1	10000	250	Totale	Si
52.6	SLE RA 29	0	105.1	10000	250	Totale	Si
52.6	SLE RA 28	0	105.1	10000	250	Totale	Si
10.5	SLE RA 2	0	105.1	10000	350	Variabile	Si
14	SLE RA 31	0	105.1	10000	350	Variabile	Si
14	SLE RA 30	0	105.1	10000	350	Variabile	Si
14	SLE RA 29	0	105.1	10000	350	Variabile	Si
14	SLE RA 28	0	105.1	10000	350	Variabile	Si

Superelemento in acciaio composto dall'asta 45

Caratteristiche del materiale

Acciaio: S275, fyk = 2750

Caratteristiche geometriche

Lunghezza: 105.1
Nodo iniziale: 30 Nodo finale: 71
Cerniera iniziale: Svincolo: M2, M3 Cerniera finale: Svincolo: M2, M3
Sovraresistenza: 0% Sisma Z: No

Caratteristiche della sezione

Sezione	Rotazione	Area	Jx	Jy	ix	iy	Wx	Wy	Wplx	Wply
HEA160	0	38.82	1674.7	615.62	6.57	3.98	220.36	76.95	245.43	117.67

Verifiche di resistenza

Verifiche a forza assiale §4.2.4.1.2.1 - §4.2.4.1.2.2 NTC18

X	Comb.	Sfruttamento	Classe	NEd	Nc,Rd	Nt,Rd	Riduzione da taglio	ρx	ρy	Verifica
105.1	SLU 132	0.057		5819.2		101662.9	1	0	0	Si

Verifiche a forza assiale SLD §4.2.4.1.2.1 - §4.2.4.1.2.2 NTC18

X	Comb.	Sfruttamento	Classe	NEd	Nc,Rd	Nt,Rd	Riduzione da taglio	ρx	ρy	Verifica
105.1	SLD 3	0.008		851.2		101662.9	1	0	0	Si

Verifica a taglio Y §4.2.4.1.2.4 NTC18

X	Comb.	Sfruttamento	VEd	Vc,Rd	Av	Interazione taglio-torsione	Riduzione torsione	Verifica
0	SLU 132	0.001	18.3	20045.7	13.26	Considerata	1	Si

Verifica a taglio Y SLD §4.2.4.1.2.4 NTC18

X	Comb.	Sfruttamento	VEd	Vc,Rd	Av	Interazione taglio-torsione	Riduzione torsione	Verifica
0	SLD 12	0.001	14.1	19763.7	13.26	Considerata	0.99	Si

Verifica a torsione §4.2.4.1.2.5 NTC18

X	Comb.	Sfruttamento torsione	TEd	TRd	Riduzione taglio resistente	Sfruttamento taglio-torsione	τEd,totale	τRd	Verifica
49.1	SLV 12	0.092	1347	14685.6	Considerata				Si

Verifica a torsione SLD §4.2.4.1.2.5 NTC18

X	Comb.	Sfruttamento torsione	TEd	TRd	Riduzione taglio resistente	Sfruttamento taglio-torsione	τEd,totale	τRd	Verifica
49.1	SLD 12	0.035	512.8	14685.6	Considerata				Si

Verifica a presso/tenso flessione retta X §§ 4.2.4.1.2.3 - 4.2.4.1.2.6 - 4.2.4.1.2.7 - 4.2.4.1.2.8 NTC18

Verifiche eseguite utilizzando la formula conservativa (6.2) §6.2.1 EN 1993-1-1:2005.

X	Comb.	Sfruttamento	Classe	NEd	NRd	Rid. NRd da VEd	Mx,Ed	Mx,Rd	Rid. Mx,Rd da VEd	Rid. Mx,Rd da NEd	ρx	ρy	Verifica
56.1	SLU 132	0.058	1	5809.9	101662.9	1	-479	642783	1		0	0	Si

Verifica a presso/tenso flessione retta X SLD §§ 4.2.4.1.2.3 - 4.2.4.1.2.6 - 4.2.4.1.2.7 - 4.2.4.1.2.8 NTC18

Verifiche eseguite utilizzando la formula conservativa (6.2) §6.2.1 EN 1993-1-1:2005.

X	Comb.	Sfruttamento	Classe	NEd	NRd	Rid. NRd da VEd	Mx,Ed	Mx,Rd	Rid. Mx,Rd da VEd	Rid. Mx,Rd da NEd	ρx	ρy	Verifica
56.1	SLD 3	0.009	1	844.1	101662.9	1	-369	642783	1		0	0	Si

Verifiche ad instabilità

Caratteristiche iniziali

Membratura principale per controllo snellezza; Calcolo di snellezze ed N critici condotti secondo gli assi principali;
Curva X: b; Curva Y: c; Svergolamento: Carico all'estradosso; Curva svergolamento: b;

Dati per instabilità attorno a x

Numero rit.	Presente	Ascissa	Campata	βx/m	Vincolo a entrambi estremi	λx/m	λVer
1	Si	0					
			1-2	1	Si	16	Si, (<200)
2	Si	105.1					

Dati per instabilità attorno a y

Numero rit.	Presente	Ascissa	Campata	βy/n	k,LT	kw,LT	Vincolo a entrambi estremi	λy/n	λVer
1	Si	0							
			1-2	1	1	1	Si	26.4	Si, (<200)
2	Si	105.1							

Verifica di stabilità a taglio anima Y §4.2.4.1.2.4 [4.2.27] NTC18

η	hw	tw	hw/tw max	Verifica
1.2	13.4	0.6	55.46	Si

Verifica di stabilità a taglio anima Y SLD §4.2.4.1.2.4 [4.2.27] NTC18

η	hw	tw	hw/tw max	Verifica
1.2	13.4	0.6	55.46	Si

Verifiche a deformabilità

Mensola X: No; Mensola Y: No.

Frecce lungo X

Ascissa freccia	Combinazione	Freccia	Luce	L/f	L/f,min	Tipo	Verifica
42.1	SLE RA 1	0	105.1	10000	250	Totale	Si
38.6	SLE RA 31	0	105.1	10000	250	Totale	Si
38.6	SLE RA 30	0	105.1	10000	250	Totale	Si
38.6	SLE RA 29	0	105.1	10000	250	Totale	Si
38.6	SLE RA 28	0	105.1	10000	250	Totale	Si
80.6	SLE RA 2	0	105.1	10000	350	Variabile	Si
3.5	SLE RA 31	0	105.1	10000	350	Variabile	Si
3.5	SLE RA 30	0	105.1	10000	350	Variabile	Si
3.5	SLE RA 29	0	105.1	10000	350	Variabile	Si
3.5	SLE RA 28	0	105.1	10000	350	Variabile	Si

Frecce lungo Y

Ascissa freccia	Combinazione	Freccia	Luce	L/f	L/f,min	Tipo	Verifica
52.6	SLE RA 1	0	105.1	10000	250	Totale	Si
52.6	SLE RA 31	0	105.1	10000	250	Totale	Si
52.6	SLE RA 30	0	105.1	10000	250	Totale	Si
52.6	SLE RA 29	0	105.1	10000	250	Totale	Si
52.6	SLE RA 28	0	105.1	10000	250	Totale	Si
10.5	SLE RA 2	0	105.1	10000	350	Variabile	Si
7	SLE RA 31	0	105.1	10000	350	Variabile	Si
7	SLE RA 30	0	105.1	10000	350	Variabile	Si
17.5	SLE RA 29	0	105.1	10000	350	Variabile	Si
7	SLE RA 28	0	105.1	10000	350	Variabile	Si

Superelemento in acciaio composto dall'asta 46

Caratteristiche del materiale

Acciaio: S275, fyk = 2750

Caratteristiche geometriche

Lunghezza: 108.7
Nodo iniziale: 8 Nodo finale: 37
Cerniera iniziale: No Cerniera finale: No
Sovraresistenza: 0% Sisma Z: No

Caratteristiche della sezione

Sezione	Rotazione	Area	Jx	Jy	ix	iy	Wx	Wy	Wplx	Wply
HEA240	0	76.92	7771.3	2768.96	10.05	6	675.77	230.75	745.47	351.79

Verifiche di resistenza

Verifiche a forza assiale §4.2.4.1.2.1 - §4.2.4.1.2.2 NTC18

X	Comb.	Sfruttamento	Classe	NEd	Nc,Rd	Nt,Rd	Riduzione da taglio	ρx	ρy	Verifica
0	SLU 117	0.174	1	-35140.7	201468.8		1	0	0	Si

Verifiche a forza assiale SLD §4.2.4.1.2.1 - §4.2.4.1.2.2 NTC18

X	Comb.	Sfruttamento	Classe	NEd	Nc,Rd	Nt,Rd	Riduzione da taglio	ρx	ρy	Verifica
0	SLD 16	0.078	1	-15812.1	201468.8		1	0	0	Si

Verifica a taglio X §4.2.4.1.2.4 NTC18

X	Comb.	Sfruttamento	VEd	Vc,Rd	Av	Interazione taglio-torsione	Riduzione torsione	Verifica
0	SLV 8	0.004	-340.8	91535.3	61.47	Considerata	0.98	Si

Verifica a taglio X SLD §4.2.4.1.2.4 NTC18

X	Comb.	Sfruttamento	VEd	Vc,Rd	Av	Interazione taglio-torsione	Riduzione torsione	Verifica
39.8	SLD 8	0.001	-129.3	92422.5	61.47	Considerata	0.99	Si

Verifica a taglio Y §4.2.4.1.2.4 NTC18

X	Comb.	Sfruttamento	VEd	Vc,Rd	Av	Interazione taglio-torsione	Riduzione torsione	Verifica
108.7	SLU 84	0.099	-3792.6	38202.6	25.26	Considerata	1	Si

Verifica a taglio Y SLD §4.2.4.1.2.4 NTC18

X	Comb.	Sfruttamento	VEd	Vc,Rd	Av	Interazione taglio-torsione	Riduzione torsione	Verifica
108.7	SLD 1	0.049	-1886.6	38130.9	25.26	Considerata	1	Si

Verifica a torsione §4.2.4.1.2.5 NTC18

X	Comb.	Sfruttamento torsione	TEd	TRd	Riduzione taglio resistente	Sfruttamento taglio-torsione	τEd,totale	τRd	Verifica
0	SLV 5	0.038	-1479.4	38489.3	Considerata				Si

Verifica a torsione SLD §4.2.4.1.2.5 NTC18

X	Comb.	Sfruttamento torsione	TEd	TRd	Riduzione taglio resistente	Sfruttamento taglio-torsione	τEd,totale	τRd	Verifica
58	SLD 5	0.015	-563.5	38489.3	Considerata				Si

Verifica a presso/tenso flessione retta X §§ 4.2.4.1.2.3 - 4.2.4.1.2.6 - 4.2.4.1.2.7 - 4.2.4.1.2.8 NTC18

Verifiche eseguite utilizzando la formula conservativa (6.2) §6.2.1 EN 1993-1-1:2005.

X	Comb.	Sfruttamento	Classe	NEd	NRd	Rid. NRd da VEd	Mx,Ed	Mx,Rd	Rid. Mx,Rd da VEd	Rid. Mx,Rd da NEd	ρx	ρy	Verifica
108.7	SLU 117	0.258	1	-27557.3	201468.8	1	236972	1952423	1		0	0	Si

Verifica a presso/tenso flessione retta X SLD §§ 4.2.4.1.2.3 - 4.2.4.1.2.6 - 4.2.4.1.2.7 - 4.2.4.1.2.8 NTC18

Verifiche eseguite utilizzando la formula conservativa (6.2) §6.2.1 EN 1993-1-1:2005.

X	Comb.	Sfruttamento	Classe	NEd	NRd	Rid. NRd da VEd	Mx,Ed	Mx,Rd	Rid. Mx,Rd da VEd	Rid. Mx,Rd da NEd	ρx	ρy	Verifica
7.2	SLD 14	0.079	1	-15423.2	201468.8	1	-5196	1952423	1		0	0	Si

Verifica a presso/tenso flessione retta Y §§ 4.2.4.1.2.3 - 4.2.4.1.2.6 - 4.2.4.1.2.7 - 4.2.4.1.2.8 NTC18

Verifiche eseguite utilizzando la formula conservativa (6.2) §6.2.1 EN 1993-1-1:2005.

X	Comb.	Sfruttamento	Classe	NEd	NRd	Rid. NRd da VEd	My,Ed	My,Rd	Rid. My,Rd da VEd	Rid. My,Rd da NEd	ρx	ρy	Verifica
54.3	SLV 7	0.082	1	-12700.9	201468.8	1	-17342	921364	1		0	0	Si

Verifica a presso/tenso flessione retta Y SLD §§ 4.2.4.1.2.3 - 4.2.4.1.2.6 - 4.2.4.1.2.7 - 4.2.4.1.2.8 NTC18

Verifiche eseguite utilizzando la formula conservativa (6.2) §6.2.1 EN 1993-1-1:2005.

X	Comb.	Sfruttamento	Classe	NEd	NRd	Rid. NRd da VEd	My,Ed	My,Rd	Rid. My,Rd da VEd	Rid. My,Rd da NEd	ρx	ρy	Verifica
0	SLD 11	0.079	1	-15729.4	201468.8	1	445	921364	1		0	0	Si

Verifica a presso/tenso flessione deviata §§ 4.2.4.1.2.3 - 4.2.4.1.2.6 - 4.2.4.1.2.7 - 4.2.4.1.2.8 NTC18

Verifiche eseguite utilizzando la formula conservativa (6.2) §6.2.1 EN 1993-1-1:2005.

X	Comb.	Sfruttamento	Classe	NEd	NRd	Rid. NRd da VEd	Mx,Ed	Mx,Rd	My,Ed	My,Rd	Rid. Mx,Rd da VEd	Rid. Mx,Rd da NEd	Rid. My,Rd da VEd	Rid. My,Rd da NEd	α	β	ρx	ρy	Verifica
108.7	SLV 7	0.121	1	-9784.2	201468.8	1	66303	1952423	-35860	921364	1		1				0	0	Si

Verifica a presso/tenso flessione deviata SLD §§ 4.2.4.1.2.3 - 4.2.4.1.2.6 - 4.2.4.1.2.7 - 4.2.4.1.2.8 NTC18

Verifiche eseguite utilizzando la formula conservativa (6.2) §6.2.1 EN 1993-1-1:2005.

X	Comb.	Sfruttamento	Classe	NEd	NRd	Rid. NRd da VEd	Mx,Ed	Mx,Rd	My,Ed	My,Rd	Rid. Mx,Rd da VEd	Rid. Mx,Rd da NEd	Rid. My,Rd da VEd	Rid. My,Rd da NEd	α	β	ρx	ρy	Verifica
108.7	SLD 8	0.095	1	-9825.1	201468.8	1	62375	1952423	-13598	921364	1		1				0	0	Si

Verifiche ad instabilità

Caratteristiche iniziali

Membratura principale per controllo snellezza; Calcolo di snellezze ed N critici condotti secondo gli assi principali;
Curva X: b; Curva Y: c; Svergolamento: Carico all'estradosso; Curva svergolamento: b;

Dati per instabilità attorno a x

Numero rit.	Presente	Ascissa	Campata	βx/m	Vincolo a entrambi estremi	λx/m	λVer
1	Si	0					
			1-2	1	Si	10.8	Si, (<200)
2	Si	108.7					

Dati per instabilità attorno a y

Numero rit.	Presente	Ascissa	Campata	βy/n	k,LT	kw,LT	Vincolo a entrambi estremi	λy/n	λVer
1	Si	0							
			1-2	1	1	1	Si	18.1	Si, (<200)
2	Si	108.7							

Verifica di stabilità per pressoflessione §C.4.2.4.1.3.3.2 NTC18

X	Comb.	Sfruttamento	Classe	NEd	NRk	Mx,Ed max	Mx,Rk	My,Ed max	My,Rk	χ,x	χ,y	kxx	kxy	kyx	kyy	χ,LT	Verifica
0	SLU 117	0.273	1	-35140.7	211542.2	236972.4	2050044	31.2	967432.2	1	0.996	0.446	0.355	0.809	0.592	1	Si

Verifica di stabilità per pressoflessione SLD §C.4.2.4.1.3.3.2 NTC18

X	Comb.	Sfruttamento	Classe	NEd	NRk	Mx,Ed max	Mx,Rk	My,Ed max	My,Rk	χ,x	χ,y	kxx	kxy	kyx	kyy	χ,LT	Verifica
0	SLD 8	0.112	1	-15658.5	211542.2	62374.8	2050044	13598.3	967432.2	1	0.996	0.398	0.347	0.809	0.579	1	Si

Verifica di stabilità a taglio anima Y §4.2.4.1.2.4 [4.2.27] NTC18

η	hw	tw	hw/tw max	Verifica
1.2	20.6	0.8	55.46	Si

Verifica di stabilità a taglio anima Y SLD §4.2.4.1.2.4 [4.2.27] NTC18

η	hw	tw	hw/tw max	Verifica
1.2	20.6	0.8	55.46	Si

Verifiche a deformabilità

Mensola X: No; Mensola Y: No.

Frecce lungo X

Ascissa freccia	Combinazione	Freccia	Luce	L/f	L/f,min	Tipo	Verifica
65.2	SLE RA 1	0	108.7	10000	250	Totale	Si
61.6	SLE RA 31	0	108.7	10000	250	Totale	Si
32.6	SLE RA 30	0	108.7	10000	250	Totale	Si
61.6	SLE RA 29	0	108.7	10000	250	Totale	Si
25.4	SLE RA 28	0	108.7	10000	250	Totale	Si
61.6	SLE RA 2	0	108.7	10000	350	Variabile	Si
61.6	SLE RA 31	0	108.7	10000	350	Variabile	Si
61.6	SLE RA 30	0	108.7	10000	350	Variabile	Si
61.6	SLE RA 29	0	108.7	10000	350	Variabile	Si
61.6	SLE RA 28	0	108.7	10000	350	Variabile	Si

Frecce lungo Y

Ascissa freccia	Combinazione	Freccia	Luce	L/f	L/f,min	Tipo	Verifica
47.1	SLE RA 1	-0.002	108.7	10000	250	Totale	Si
79.7	SLE RA 31	0.002	108.7	10000	250	Totale	Si
43.5	SLE RA 30	-0.002	108.7	10000	250	Totale	Si
79.7	SLE RA 29	0.002	108.7	10000	250	Totale	Si
47.1	SLE RA 28	-0.002	108.7	10000	250	Totale	Si
61.6	SLE RA 2	0.005	108.7	10000	350	Variabile	Si
61.6	SLE RA 31	0.004	108.7	10000	350	Variabile	Si
61.6	SLE RA 30	0	108.7	10000	350	Variabile	Si
61.6	SLE RA 29	0.004	108.7	10000	350	Variabile	Si
61.6	SLE RA 28	0	108.7	10000	350	Variabile	Si

Superelemento in acciaio composto dall'asta 47

Caratteristiche del materiale

Acciaio: S275, fyk = 2750

Caratteristiche geometriche

Lunghezza: 108.7
Nodo iniziale: 9 Nodo finale: 40
Cerniera iniziale: No Cerniera finale: No
Sovraresistenza: 0% Sisma Z: No

Caratteristiche della sezione

Sezione	Rotazione	Area	Jx	Jy	ix	iy	Wx	Wy	Wplx	Wply
HEA240	0	76.92	7771.3	2768.96	10.05	6	675.77	230.75	745.47	351.79

Verifiche di resistenza

Verifiche a forza assiale §4.2.4.1.2.1 - §4.2.4.1.2.2 NTC18

X	Comb.	Sfruttamento	Classe	NEd	Nc,Rd	Nt,Rd	Riduzione da taglio	ρx	ρy	Verifica
0	SLU 117	0.174	1	-35139.9	201468.8		1	0	0	Si

Verifiche a forza assiale SLD §4.2.4.1.2.1 - §4.2.4.1.2.2 NTC18

X	Comb.	Sfruttamento	Classe	NEd	Nc,Rd	Nt,Rd	Riduzione da taglio	ρx	ρy	Verifica
0	SLD 4	0.078	1	-15812.1	201468.8		1	0	0	Si

Verifica a taglio X §4.2.4.1.2.4 NTC18

X	Comb.	Sfruttamento	VEd	Vc,Rd	Av	Interazione taglio-torsione	Riduzione torsione	Verifica
32.6	SLV 12	0.004	340.8	91535.3	61.47	Considerata	0.98	Si

Verifica a taglio X SLD §4.2.4.1.2.4 NTC18

X	Comb.	Sfruttamento	VEd	Vc,Rd	Av	Interazione taglio-torsione	Riduzione torsione	Verifica
25.4	SLD 11	0.001	129.3	92422.5	61.47	Considerata	0.99	Si

Verifica a taglio Y §4.2.4.1.2.4 NTC18

X	Comb.	Sfruttamento	VEd	Vc,Rd	Av	Interazione taglio-torsione	Riduzione torsione	Verifica
108.7	SLU 84	0.099	-3792.6	38202.6	25.26	Considerata	1	Si

Verifica a taglio Y SLD §4.2.4.1.2.4 NTC18

X	Comb.	Sfruttamento	VEd	Vc,Rd	Av	Interazione taglio-torsione	Riduzione torsione	Verifica
108.7	SLD 14	0.049	-1886.6	38130.9	25.26	Considerata	1	Si

Verifica a torsione §4.2.4.1.2.5 NTC18

X	Comb.	Sfruttamento torsione	TEd	TRd	Riduzione taglio resistente	Sfruttamento taglio-torsione	τEd,totale	τRd	Verifica
58	SLV 9	0.038	1479.4	38489.3	Considerata				Si

Verifica a torsione SLD §4.2.4.1.2.5 NTC18

X	Comb.	Sfruttamento torsione	TEd	TRd	Riduzione taglio resistente	Sfruttamento taglio-torsione	τEd,totale	τRd	Verifica
7.2	SLD 9	0.015	563.5	38489.3	Considerata				Si

Verifica a presso/tenso flessione retta X §§ 4.2.4.1.2.3 - 4.2.4.1.2.6 - 4.2.4.1.2.7 - 4.2.4.1.2.8 NTC18

Verifiche eseguite utilizzando la formula conservativa (6.2) §6.2.1 EN 1993-1-1:2005.

X	Comb.	Sfruttamento	Classe	NEd	NRd	Rid. NRd da VEd	Mx,Ed	Mx,Rd	Rid. Mx,Rd da VEd	Rid. Mx,Rd da NEd	ρx	ρy	Verifica
108.7	SLU 84	0.258	1	-27556.5	201468.8	1	236970	1952423	1		0	0	Si

Verifica a presso/tenso flessione retta X SLD §§ 4.2.4.1.2.3 - 4.2.4.1.2.6 - 4.2.4.1.2.7 - 4.2.4.1.2.8 NTC18

Verifiche eseguite utilizzando la formula conservativa (6.2) §6.2.1 EN 1993-1-1:2005.

X	Comb.	Sfruttamento	Classe	NEd	NRd	Rid. NRd da VEd	Mx,Ed	Mx,Rd	Rid. Mx,Rd da VEd	Rid. Mx,Rd da NEd	ρx	ρy	Verifica
7.2	SLD 1	0.079	1	-15423.2	201468.8	1	-5196	1952423	1		0	0	Si

Verifica a presso/tenso flessione retta Y §§ 4.2.4.1.2.3 - 4.2.4.1.2.6 - 4.2.4.1.2.7 - 4.2.4.1.2.8 NTC18

Verifiche eseguite utilizzando la formula conservativa (6.2) §6.2.1 EN 1993-1-1:2005.

X	Comb.	Sfruttamento	Classe	NEd	NRd	Rid. NRd da VEd	My,Ed	My,Rd	Rid. My,Rd da VEd	Rid. My,Rd da NEd	ρx	ρy	Verifica
54.3	SLV 12	0.082	1	-12700.9	201468.8	1	17342	921364	1		0	0	Si

Verifica a presso/tenso flessione retta Y SLD §§ 4.2.4.1.2.3 - 4.2.4.1.2.6 - 4.2.4.1.2.7 - 4.2.4.1.2.8 NTC18

Verifiche eseguite utilizzando la formula conservativa (6.2) §6.2.1 EN 1993-1-1:2005.

X	Comb.	Sfruttamento	Classe	NEd	NRd	Rid. NRd da VEd	My,Ed	My,Rd	Rid. My,Rd da VEd	Rid. My,Rd da NEd	ρx	ρy	Verifica
0	SLD 7	0.079	1	-15729.4	201468.8	1	-445	921364	1		0	0	Si

Verifica a presso/tenso flessione deviata §§ 4.2.4.1.2.3 - 4.2.4.1.2.6 - 4.2.4.1.2.7 - 4.2.4.1.2.8 NTC18

Verifiche eseguite utilizzando la formula conservativa (6.2) §6.2.1 EN 1993-1-1:2005.

X	Comb.	Sfruttamento	Classe	NEd	NRd	Rid. NRd da VEd	Mx,Ed	Mx,Rd	My,Ed	My,Rd	Rid. Mx,Rd da VEd	Rid. Mx,Rd da NEd	Rid. My,Rd da VEd	Rid. My,Rd da NEd	α	β	ρx	ρy	Verifica
108.7	SLV 12	0.121	1	-9784.2	201468.8	1	66303	1952423	35860	921364	1		1				0	0	Si

Verifica a presso/tenso flessione deviata SLD §§ 4.2.4.1.2.3 - 4.2.4.1.2.6 - 4.2.4.1.2.7 - 4.2.4.1.2.8 NTC18

Verifiche eseguite utilizzando la formula conservativa (6.2) §6.2.1 EN 1993-1-1:2005.

X	Comb.	Sfruttamento	Classe	NEd	NRd	Rid. NRd da VEd	Mx,Ed	Mx,Rd	My,Ed	My,Rd	Rid. Mx,Rd da VEd	Rid. Mx,Rd da NEd	Rid. My,Rd da VEd	Rid. My,Rd da NEd	α	β	ρx	ρy	Verifica
108.7	SLD 12	0.095	1	-9825.1	201468.8	1	62375	1952423	13598	921364	1		1				0	0	Si

Verifiche ad instabilità

Caratteristiche iniziali

Membratura principale per controllo snellezza; Calcolo di snellezze ed N critici condotti secondo gli assi principali;
Curva X: b; Curva Y: c; Svergolamento: Carico all'estradosso; Curva svergolamento: b;

Dati per instabilità attorno a x

Numero rit.	Presente	Ascissa	Campata	βx/m	Vincolo a entrambi estremi	λx/m	λVer
1	Si	0					
			1-2	1	Si	10.8	Si, (<200)
2	Si	108.7					

Dati per instabilità attorno a y

Numero rit.	Presente	Ascissa	Campata	βy/n	k,LT	kw,LT	Vincolo a entrambi estremi	λy/n	λVer
1	Si	0							
			1-2	1	1	1	Si	18.1	Si, (<200)
2	Si	108.7							

Verifica di stabilità per pressoflessione §C.4.2.4.1.3.3.2 NTC18

X	Comb.	Sfruttamento	Classe	NEd	NRk	Mx,Ed max	Mx,Rk	My,Ed max	My,Rk	χ,x	χ,y	kxx	kxy	kyx	kyy	χ,LT	Verifica
0	SLU 117	0.273	1	-35139.9	211542.2	236969.6	2050044	31.2	967432.2	1	0.996	0.446	0.355	0.809	0.592	1	Si

Verifica di stabilità per pressoflessione SLD §C.4.2.4.1.3.3.2 NTC18

X	Comb.	Sfruttamento	Classe	NEd	NRk	Mx,Ed max	Mx,Rk	My,Ed max	My,Rk	χ,x	χ,y	kxx	kxy	kyx	kyy	χ,LT	Verifica
0	SLD 11	0.112	1	-15658.5	211542.2	62374.8	2050044	13598.3	967432.2	1	0.996	0.398	0.347	0.809	0.579	1	Si

Verifica di stabilità a taglio anima Y §4.2.4.1.2.4 [4.2.27] NTC18

η	hw	tw	hw/tw max	Verifica
1.2	20.6	0.8	55.46	Si

Verifica di stabilità a taglio anima Y SLD §4.2.4.1.2.4 [4.2.27] NTC18

η	hw	tw	hw/tw max	Verifica
1.2	20.6	0.8	55.46	Si

Verifiche a deformabilità

Mensola X: No; Mensola Y: No.

Frecce lungo X

Ascissa freccia	Combinazione	Freccia	Luce	L/f	L/f,min	Tipo	Verifica
65.2	SLE RA 1	0	108.7	10000	250	Totale	Si
61.6	SLE RA 31	0	108.7	10000	250	Totale	Si
36.2	SLE RA 30	0	108.7	10000	250	Totale	Si
61.6	SLE RA 29	0	108.7	10000	250	Totale	Si
29	SLE RA 28	0	108.7	10000	250	Totale	Si
61.6	SLE RA 2	0	108.7	10000	350	Variabile	Si
61.6	SLE RA 31	0	108.7	10000	350	Variabile	Si
61.6	SLE RA 30	0	108.7	10000	350	Variabile	Si
61.6	SLE RA 29	0	108.7	10000	350	Variabile	Si
61.6	SLE RA 28	0	108.7	10000	350	Variabile	Si

Frecce lungo Y

Ascissa freccia	Combinazione	Freccia	Luce	L/f	L/f,min	Tipo	Verifica
47.1	SLE RA 1	-0.002	108.7	10000	250	Totale	Si
79.7	SLE RA 31	0.002	108.7	10000	250	Totale	Si
43.5	SLE RA 30	-0.002	108.7	10000	250	Totale	Si
79.7	SLE RA 29	0.002	108.7	10000	250	Totale	Si
47.1	SLE RA 28	-0.002	108.7	10000	250	Totale	Si
61.6	SLE RA 2	0.005	108.7	10000	350	Variabile	Si
61.6	SLE RA 31	0.004	108.7	10000	350	Variabile	Si
61.6	SLE RA 30	0	108.7	10000	350	Variabile	Si
61.6	SLE RA 29	0.004	108.7	10000	350	Variabile	Si
61.6	SLE RA 28	0	108.7	10000	350	Variabile	Si

Superelemento in acciaio composto dall'asta 48

Caratteristiche del materiale

Acciaio: S275, fyk = 2750

Caratteristiche geometriche

Lunghezza: 74.7
Nodo iniziale: 37 Nodo finale: 75
Cerniera iniziale: No Cerniera finale: No
Sovraresistenza: 0% Sisma Z: No

Caratteristiche della sezione

Sezione	Rotazione	Area	Jx	Jy	ix	iy	Wx	Wy	Wplx	Wply
HEA240	0	76.92	7771.3	2768.96	10.05	6	675.77	230.75	745.47	351.79

Verifiche di resistenza

Verifiche a forza assiale §4.2.4.1.2.1 - §4.2.4.1.2.2 NTC18

X	Comb.	Sfruttamento	Classe	NEd	Nc,Rd	Nt,Rd	Riduzione da taglio	ρx	ρy	Verifica
0	SLU 117	0.181	1	-36545.6	201468.8		1	0	0	Si

Verifiche a forza assiale SLD §4.2.4.1.2.1 - §4.2.4.1.2.2 NTC18

X	Comb.	Sfruttamento	Classe	NEd	Nc,Rd	Nt,Rd	Riduzione da taglio	ρx	ρy	Verifica
0	SLD 16	0.061	1	-12234.4	201468.8		1	0	0	Si

Verifica a taglio X §4.2.4.1.2.4 NTC18

X	Comb.	Sfruttamento	VEd	Vc,Rd	Av	Interazione taglio-torsione	Riduzione torsione	Verifica
74.7	SLV 8	0.006	462.3	80830.6	61.47	Considerata	0.87	Si

Verifica a taglio X SLD §4.2.4.1.2.4 NTC18

X	Comb.	Sfruttamento	VEd	Vc,Rd	Av	Interazione taglio-torsione	Riduzione torsione	Verifica
74.7	SLD 8	0.002	175.4	88551.8	61.47	Considerata	0.95	Si

Verifica a taglio Y §4.2.4.1.2.4 NTC18

X	Comb.	Sfruttamento	VEd	Vc,Rd	Av	Interazione taglio-torsione	Riduzione torsione	Verifica
0	SLU 131	0.059	2259.2	38202.6	25.26	Considerata	1	Si

Verifica a taglio Y SLD §4.2.4.1.2.4 NTC18

X	Comb.	Sfruttamento	VEd	Vc,Rd	Av	Interazione taglio-torsione	Riduzione torsione	Verifica
0	SLD 7	0.047	1728.1	36392.6	25.26	Considerata	0.95	Si

Verifica a torsione §4.2.4.1.2.5 NTC18

X	Comb.	Sfruttamento torsione	TEd	TRd	Riduzione taglio resistente	Sfruttamento taglio-torsione	τEd,totale	τRd	Verifica
34.9	SLV 12	0.305	-11733	38489.3	Considerata				Si

Verifica a torsione SLD §4.2.4.1.2.5 NTC18

X	Comb.	Sfruttamento torsione	TEd	TRd	Riduzione taglio resistente	Sfruttamento taglio-torsione	τEd,totale	τRd	Verifica
34.9	SLD 12	0.116	-4451	38489.3	Considerata				Si

Verifica a presso/tenso flessione retta X §§ 4.2.4.1.2.3 - 4.2.4.1.2.6 - 4.2.4.1.2.7 - 4.2.4.1.2.8 NTC18

Verifiche eseguite utilizzando la formula conservativa (6.2) §6.2.1 EN 1993-1-1:2005.

X	Comb.	Sfruttamento	Classe	NEd	NRd	Rid. NRd da VEd	Mx,Ed	Mx,Rd	Rid. Mx,Rd da VEd	Rid. Mx,Rd da NEd	ρx	ρy	Verifica
0	SLU 118	0.303	1	-36545.6	201468.8	1	237022	1952423	1		0	0	Si

Verifica a presso/tenso flessione retta X SLD §§ 4.2.4.1.2.3 - 4.2.4.1.2.6 - 4.2.4.1.2.7 - 4.2.4.1.2.8 NTC18

Verifiche eseguite utilizzando la formula conservativa (6.2) §6.2.1 EN 1993-1-1:2005.

X	Comb.	Sfruttamento	Classe	NEd	NRd	Rid. NRd da VEd	Mx,Ed	Mx,Rd	Rid. Mx,Rd da VEd	Rid. Mx,Rd da NEd	ρx	ρy	Verifica
72.2	SLD 1	0.073	1	-8934.3	201468.8	1	56815	1952423	1		0	0	Si

Verifica a presso/tenso flessione deviata §§ 4.2.4.1.2.3 - 4.2.4.1.2.6 - 4.2.4.1.2.7 - 4.2.4.1.2.8 NTC18

Verifiche eseguite utilizzando la formula conservativa (6.2) §6.2.1 EN 1993-1-1:2005.

X	Comb.	Sfruttamento	Classe	NEd	NRd	Rid. NRd da VEd	Mx,Ed	Mx,Rd	My,Ed	My,Rd	Rid. Mx,Rd da VEd	Rid. Mx,Rd da NEd	Rid. My,Rd da VEd	Rid. My,Rd da NEd	α	β	ρx	ρy	Verifica
0	SLV 7	0.127	1	-11838.8	201468.8	1	66301	1952423	-31397	921364	1		1				0	0	Si

Verifica a presso/tenso flessione deviata SLD §§ 4.2.4.1.2.3 - 4.2.4.1.2.6 - 4.2.4.1.2.7 - 4.2.4.1.2.8 NTC18

Verifiche eseguite utilizzando la formula conservativa (6.2) §6.2.1 EN 1993-1-1:2005.

X	Comb.	Sfruttamento	Classe	NEd	NRd	Rid. NRd da VEd	Mx,Ed	Mx,Rd	My,Ed	My,Rd	Rid. Mx,Rd da VEd	Rid. Mx,Rd da NEd	Rid. My,Rd da VEd	Rid. My,Rd da NEd	α	β	ρx	ρy	Verifica
0	SLD 7	0.104	1	-11922	201468.8	1	62382	1952423	-11905	921364	1		1				0	0	Si

Verifiche ad instabilità

Caratteristiche iniziali

Membratura principale per controllo snellezza; Calcolo di snellezze ed N critici condotti secondo gli assi principali;
Curva X: b; Curva Y: c; Svergolamento: Carico all'estradosso; Curva svergolamento: b;

Dati per instabilità attorno a x

Numero rit.	Presente	Ascissa	Campata	βx/m	Vincolo a entrambi estremi	λx/m	λVer
1	Si	0					
			1-2	1	Si	7.4	Si, (<200)
2	Si	74.7					

Dati per instabilità attorno a y

Numero rit.	Presente	Ascissa	Campata	βy/n	k,LT	kw,LT	Vincolo a entrambi estremi	λy/n	λVer
1	Si	0							
			1-2	1	1	1	Si	12.5	Si, (<200)
2	Si	74.7							

Verifica di stabilità per pressoflessione §C.4.2.4.1.3.3.2 NTC18

X	Comb.	Sfruttamento	Classe	NEd	NRk	Mx,Ed max	Mx,Rk	My,Ed max	My,Rk	χ,x	χ,y	kxx	kxy	kyx	kyy	χ,LT	Verifica
0	SLU 85	0.286	1	-36545.6	211542.2	242228.1	2050044	36.5	967432.2	1	1	0.844	0.431	0.743	0.718	1	Si

Verifica di stabilità per pressoflessione SLD §C.4.2.4.1.3.3.2 NTC18

X	Comb.	Sfruttamento	Classe	NEd	NRk	Mx,Ed max	Mx,Rk	My,Ed max	My,Rk	χ,x	χ,y	kxx	kxy	kyx	kyy	χ,LT	Verifica
0	SLD 5	0.09	1	-11922	211542.2	62386.9	2050044	11899.5	967432.2	1	1	0.556	0.33	0.743	0.55	1	Si

Verifica di stabilità a taglio anima Y §4.2.4.1.2.4 [4.2.27] NTC18

η	hw	tw	hw/tw max	Verifica
1.2	20.6	0.8	55.46	Si

Verifica di stabilità a taglio anima Y SLD §4.2.4.1.2.4 [4.2.27] NTC18

η	hw	tw	hw/tw max	Verifica
1.2	20.6	0.8	55.46	Si

Verifiche a deformabilità

Mensola X: No; Mensola Y: No.

Frecce lungo X

Ascissa freccia	Combinazione	Freccia	Luce	L/f	L/f,min	Tipo	Verifica
44.8	SLE RA 1	0	74.7	10000	250	Totale	Si
34.9	SLE RA 31	0	74.7	10000	250	Totale	Si
42.3	SLE RA 30	0	74.7	10000	250	Totale	Si
34.9	SLE RA 29	0	74.7	10000	250	Totale	Si
42.3	SLE RA 28	0	74.7	10000	250	Totale	Si
32.4	SLE RA 2	0	74.7	10000	350	Variabile	Si
27.4	SLE RA 31	0	74.7	10000	350	Variabile	Si
47.3	SLE RA 30	0	74.7	10000	350	Variabile	Si
27.4	SLE RA 29	0	74.7	10000	350	Variabile	Si
47.3	SLE RA 28	0	74.7	10000	350	Variabile	Si

Frecce lungo Y

Ascissa freccia	Combinazione	Freccia	Luce	L/f	L/f,min	Tipo	Verifica
37.4	SLE RA 1	-0.001	74.7	10000	250	Totale	Si
37.4	SLE RA 31	0.003	74.7	10000	250	Totale	Si
37.4	SLE RA 30	-0.001	74.7	10000	250	Totale	Si
37.4	SLE RA 29	0.003	74.7	10000	250	Totale	Si
37.4	SLE RA 28	-0.001	74.7	10000	250	Totale	Si
37.4	SLE RA 2	0.005	74.7	10000	350	Variabile	Si
37.4	SLE RA 31	0.004	74.7	10000	350	Variabile	Si
37.4	SLE RA 30	0	74.7	10000	350	Variabile	Si
37.4	SLE RA 29	0.004	74.7	10000	350	Variabile	Si
37.4	SLE RA 28	0	74.7	10000	350	Variabile	Si

Superelemento in acciaio composto dall'asta 49

Caratteristiche del materiale

Acciaio: S275, fyk = 2750

Caratteristiche geometriche

Lunghezza: 74.7
Nodo iniziale: 40 Nodo finale: 76
Cerniera iniziale: No Cerniera finale: No
Sovraresistenza: 0% Sisma Z: No

Caratteristiche della sezione

Sezione	Rotazione	Area	Jx	Jy	ix	iy	Wx	Wy	Wplx	Wply
HEA240	0	76.92	7771.3	2768.96	10.05	6	675.77	230.75	745.47	351.79

Verifiche di resistenza

Verifiche a forza assiale §4.2.4.1.2.1 - §4.2.4.1.2.2 NTC18

X	Comb.	Sfruttamento	Classe	NEd	Nc,Rd	Nt,Rd	Riduzione da taglio	ρx	ρy	Verifica
0	SLU 117	0.181	1	-36544.3	201468.8		1	0	0	Si

Verifiche a forza assiale SLD §4.2.4.1.2.1 - §4.2.4.1.2.2 NTC18

X	Comb.	Sfruttamento	Classe	NEd	Nc,Rd	Nt,Rd	Riduzione da taglio	ρx	ρy	Verifica
0	SLD 4	0.061	1	-12234.4	201468.8		1	0	0	Si

Verifica a taglio X §4.2.4.1.2.4 NTC18

X	Comb.	Sfruttamento	VEd	Vc,Rd	Av	Interazione taglio-torsione	Riduzione torsione	Verifica
34.9	SLV 12	0.006	-462.3	80830.6	61.47	Considerata	0.87	Si

Verifica a taglio X SLD §4.2.4.1.2.4 NTC18

X	Comb.	Sfruttamento	VEd	Vc,Rd	Av	Interazione taglio-torsione	Riduzione torsione	Verifica
74.7	SLD 12	0.002	-175.4	88551.8	61.47	Considerata	0.95	Si

Verifica a taglio Y §4.2.4.1.2.4 NTC18

X	Comb.	Sfruttamento	VEd	Vc,Rd	Av	Interazione taglio-torsione	Riduzione torsione	Verifica
0	SLU 131	0.059	2259.5	38202.6	25.26	Considerata	1	Si

Verifica a taglio Y SLD §4.2.4.1.2.4 NTC18

X	Comb.	Sfruttamento	VEd	Vc,Rd	Av	Interazione taglio-torsione	Riduzione torsione	Verifica
0	SLD 12	0.047	1728.1	36392.6	25.26	Considerata	0.95	Si

Verifica a torsione §4.2.4.1.2.5 NTC18

X	Comb.	Sfruttamento torsione	TEd	TRd	Riduzione taglio resistente	Sfruttamento taglio-torsione	τEd,totale	τRd	Verifica
74.7	SLV 8	0.305	11733	38489.3	Considerata				Si

Verifica a torsione SLD §4.2.4.1.2.5 NTC18

X	Comb.	Sfruttamento torsione	TEd	TRd	Riduzione taglio resistente	Sfruttamento taglio-torsione	τEd,totale	τRd	Verifica
74.7	SLD 8	0.116	4451	38489.3	Considerata				Si

Verifica a presso/tenso flessione retta X §§ 4.2.4.1.2.3 - 4.2.4.1.2.6 - 4.2.4.1.2.7 - 4.2.4.1.2.8 NTC18

Verifiche eseguite utilizzando la formula conservativa (6.2) §6.2.1 EN 1993-1-1:2005.

X	Comb.	Sfruttamento	Classe	NEd	NRd	Rid. NRd da VEd	Mx,Ed	Mx,Rd	Rid. Mx,Rd da VEd	Rid. Mx,Rd da NEd	ρx	ρy	Verifica
0	SLU 118	0.303	1	-36544.3	201468.8	1	237019	1952423	1		0	0	Si

Verifica a presso/tenso flessione retta X SLD §§ 4.2.4.1.2.3 - 4.2.4.1.2.6 - 4.2.4.1.2.7 - 4.2.4.1.2.8 NTC18

Verifiche eseguite utilizzando la formula conservativa (6.2) §6.2.1 EN 1993-1-1:2005.

X	Comb.	Sfruttamento	Classe	NEd	NRd	Rid. NRd da VEd	Mx,Ed	Mx,Rd	Rid. Mx,Rd da VEd	Rid. Mx,Rd da NEd	ρx	ρy	Verifica
72.2	SLD 14	0.073	1	-8934.3	201468.8	1	56815	1952423	1		0	0	Si

Verifica a presso/tenso flessione deviata §§ 4.2.4.1.2.3 - 4.2.4.1.2.6 - 4.2.4.1.2.7 - 4.2.4.1.2.8 NTC18

Verifiche eseguite utilizzando la formula conservativa (6.2) §6.2.1 EN 1993-1-1:2005.

X	Comb.	Sfruttamento	Classe	NEd	NRd	Rid. NRd da VEd	Mx,Ed	Mx,Rd	My,Ed	My,Rd	Rid. Mx,Rd da VEd	Rid. Mx,Rd da NEd	Rid. My,Rd da VEd	Rid. My,Rd da NEd	α	β	ρx	ρy	Verifica
0	SLV 12	0.127	1	-11838.8	201468.8	1	66301	1952423	31397	921364	1		1				0	0	Si

Verifica a presso/tenso flessione deviata SLD §§ 4.2.4.1.2.3 - 4.2.4.1.2.6 - 4.2.4.1.2.7 - 4.2.4.1.2.8 NTC18

Verifiche eseguite utilizzando la formula conservativa (6.2) §6.2.1 EN 1993-1-1:2005.

X	Comb.	Sfruttamento	Classe	NEd	NRd	Rid. NRd da VEd	Mx,Ed	Mx,Rd	My,Ed	My,Rd	Rid. Mx,Rd da VEd	Rid. Mx,Rd da NEd	Rid. My,Rd da VEd	Rid. My,Rd da NEd	α	β	ρx	ρy	Verifica
0	SLD 12	0.104	1	-11922	201468.8	1	62382	1952423	11905	921364	1		1				0	0	Si

Verifiche ad instabilità

Caratteristiche iniziali

Membratura principale per controllo snellezza; Calcolo di snellezze ed N critici condotti secondo gli assi principali;
Curva X: b; Curva Y: c; Svergolamento: Carico all'estradosso; Curva svergolamento: b;

Dati per instabilità attorno a x

Numero rit.	Presente	Ascissa	Campata	βx/m	Vincolo a entrambi estremi	λx/m	λVer
1	Si	0					
			1-2	1	Si	7.4	Si, (<200)
2	Si	74.7					

Dati per instabilità attorno a y

Numero rit.	Presente	Ascissa	Campata	βy/n	k,LT	kw,LT	Vincolo a entrambi estremi	λy/n	λVer
1	Si	0							
			1-2	1	1	1	Si	12.5	Si, (<200)
2	Si	74.7							

Verifica di stabilità per pressoflessione §C.4.2.4.1.3.3.2 NTC18

X	Comb.	Sfruttamento	Classe	NEd	NRk	Mx,Ed max	Mx,Rk	My,Ed max	My,Rk	χ,x	χ,y	kxx	kxy	kyx	kyy	χ,LT	Verifica
0	SLU 118	0.286	1	-36544.3	211542.2	242212.8	2050044	36.5	967432.2	1	1	0.844	0.43	0.743	0.717	1	Si

Verifica di stabilità per pressoflessione SLD §C.4.2.4.1.3.3.2 NTC18

X	Comb.	Sfruttamento	Classe	NEd	NRk	Mx,Ed max	Mx,Rk	My,Ed max	My,Rk	χ,x	χ,y	kxx	kxy	kyx	kyy	χ,LT	Verifica
0	SLD 10	0.09	1	-11922	211542.2	62386.9	2050044	11899.5	967432.2	1	1	0.556	0.33	0.743	0.55	1	Si

Verifica di stabilità a taglio anima Y §4.2.4.1.2.4 [4.2.27] NTC18

η	hw	tw	hw/tw max	Verifica
1.2	20.6	0.8	55.46	Si

Verifica di stabilità a taglio anima Y SLD §4.2.4.1.2.4 [4.2.27] NTC18

η	hw	tw	hw/tw max	Verifica
1.2	20.6	0.8	55.46	Si

Verifiche a deformabilità

Mensola X: No; Mensola Y: No.

Frecce lungo X

Ascissa freccia	Combinazione	Freccia	Luce	L/f	L/f,min	Tipo	Verifica
44.8	SLE RA 1	0	74.7	10000	250	Totale	Si
34.9	SLE RA 31	0	74.7	10000	250	Totale	Si
42.3	SLE RA 30	0	74.7	10000	250	Totale	Si
34.9	SLE RA 29	0	74.7	10000	250	Totale	Si
42.3	SLE RA 28	0	74.7	10000	250	Totale	Si
32.4	SLE RA 2	0	74.7	10000	350	Variabile	Si
27.4	SLE RA 31	0	74.7	10000	350	Variabile	Si
47.3	SLE RA 30	0	74.7	10000	350	Variabile	Si
27.4	SLE RA 29	0	74.7	10000	350	Variabile	Si
47.3	SLE RA 28	0	74.7	10000	350	Variabile	Si

Frecce lungo Y

Ascissa freccia	Combinazione	Freccia	Luce	L/f	L/f,min	Tipo	Verifica
37.4	SLE RA 1	-0.001	74.7	10000	250	Totale	Si
37.4	SLE RA 31	0.003	74.7	10000	250	Totale	Si
37.4	SLE RA 30	-0.001	74.7	10000	250	Totale	Si
37.4	SLE RA 29	0.003	74.7	10000	250	Totale	Si
37.4	SLE RA 28	-0.001	74.7	10000	250	Totale	Si
37.4	SLE RA 2	0.005	74.7	10000	350	Variabile	Si
37.4	SLE RA 31	0.004	74.7	10000	350	Variabile	Si
37.4	SLE RA 30	0	74.7	10000	350	Variabile	Si
37.4	SLE RA 29	0.004	74.7	10000	350	Variabile	Si
37.4	SLE RA 28	0	74.7	10000	350	Variabile	Si

Superelemento in acciaio composto dall'asta 50

Caratteristiche del materiale

Acciaio: S275, fyk = 2750

Caratteristiche geometriche

Lunghezza: 78.5
Nodo iniziale: 75 Nodo finale: 97
Cerniera iniziale: No Cerniera finale: No
Sovraresistenza: 0% Sisma Z: No

Caratteristiche della sezione

Sezione	Rotazione	Area	Jx	Jy	ix	iy	Wx	Wy	Wplx	Wply
HEA240	0	76.92	7771.3	2768.96	10.05	6	675.77	230.75	745.47	351.79

Verifiche di resistenza

Verifiche a forza assiale §4.2.4.1.2.1 - §4.2.4.1.2.2 NTC18

X	Comb.	Sfruttamento	Classe	NEd	Nc,Rd	Nt,Rd	Riduzione da taglio	ρx	ρy	Verifica
0	SLU 84	0.161	1	-32383.3	201468.8		1	0	0	Si

Verifiche a forza assiale SLD §4.2.4.1.2.1 - §4.2.4.1.2.2 NTC18

X	Comb.	Sfruttamento	Classe	NEd	Nc,Rd	Nt,Rd	Riduzione da taglio	ρx	ρy	Verifica
0	SLD 15	0.046	1	-9310.2	201468.8		1	0	0	Si

Verifica a taglio X §4.2.4.1.2.4 NTC18

X	Comb.	Sfruttamento	VEd	Vc,Rd	Av	Interazione taglio-torsione	Riduzione torsione	Verifica
78.5	SLV 10	0.004	-343.5	83209.9	61.47	Considerata	0.9	Si

Verifica a taglio X SLD §4.2.4.1.2.4 NTC18

X	Comb.	Sfruttamento	VEd	Vc,Rd	Av	Interazione taglio-torsione	Riduzione torsione	Verifica
0	SLD 9	0.001	-130.3	89385.7	61.47	Considerata	0.96	Si

Verifica a taglio Y §4.2.4.1.2.4 NTC18

X	Comb.	Sfruttamento	VEd	Vc,Rd	Av	Interazione taglio-torsione	Riduzione torsione	Verifica
0	SLU 85	0.182	6944.6	38202.6	25.26	Considerata	1	Si

Verifica a taglio Y SLD §4.2.4.1.2.4 NTC18

X	Comb.	Sfruttamento	VEd	Vc,Rd	Av	Interazione taglio-torsione	Riduzione torsione	Verifica
0	SLD 1	0.053	1989.7	37768.2	25.26	Considerata	0.99	Si

Verifica a torsione §4.2.4.1.2.5 NTC18

X	Comb.	Sfruttamento torsione	TEd	TRd	Riduzione taglio resistente	Sfruttamento taglio-torsione	τEd,totale	τRd	Verifica
78.5	SLV 10	0.248	9559.7	38489.3	Considerata				Si

Verifica a torsione SLD §4.2.4.1.2.5 NTC18

X	Comb.	Sfruttamento torsione	TEd	TRd	Riduzione taglio resistente	Sfruttamento taglio-torsione	τEd,totale	τRd	Verifica
78.5	SLD 10	0.094	3624.8	38489.3	Considerata				Si

Verifica a presso/tenso flessione retta X §§ 4.2.4.1.2.3 - 4.2.4.1.2.6 - 4.2.4.1.2.7 - 4.2.4.1.2.8 NTC18

Verifiche eseguite utilizzando la formula conservativa (6.2) §6.2.1 EN 1993-1-1:2005.

X	Comb.	Sfruttamento	Classe	NEd	NRd	Rid. NRd da VEd	Mx,Ed	Mx,Rd	Rid. Mx,Rd da VEd	Rid. Mx,Rd da NEd	ρx	ρy	Verifica
0	SLU 118	0.285	1	-32383.3	201468.8	1	242155	1952423	1		0	0	Si

Verifica a presso/tenso flessione retta Y §§ 4.2.4.1.2.3 - 4.2.4.1.2.6 - 4.2.4.1.2.7 - 4.2.4.1.2.8 NTC18

Verifiche eseguite utilizzando la formula conservativa (6.2) §6.2.1 EN 1993-1-1:2005.

X	Comb.	Sfruttamento	Classe	NEd	NRd	Rid. NRd da VEd	My,Ed	My,Rd	Rid. My,Rd da VEd	Rid. My,Rd da NEd	ρx	ρy	Verifica
34	SLV 11	0.064	1	-8741.3	201468.8	1	19242	921364	1		0	0	Si

Verifica a presso/tenso flessione retta Y SLD §§ 4.2.4.1.2.3 - 4.2.4.1.2.6 - 4.2.4.1.2.7 - 4.2.4.1.2.8 NTC18

Verifiche eseguite utilizzando la formula conservativa (6.2) §6.2.1 EN 1993-1-1:2005.

X	Comb.	Sfruttamento	Classe	NEd	NRd	Rid. NRd da VEd	My,Ed	My,Rd	Rid. My,Rd da VEd	Rid. My,Rd da NEd	ρx	ρy	Verifica
36.6	SLD 11	0.051	1	-8531.3	201468.8	1	7640	921364	1		0	0	Si

Verifica a presso/tenso flessione deviata §§ 4.2.4.1.2.3 - 4.2.4.1.2.6 - 4.2.4.1.2.7 - 4.2.4.1.2.8 NTC18

Verifiche eseguite utilizzando la formula conservativa (6.2) §6.2.1 EN 1993-1-1:2005.

X	Comb.	Sfruttamento	Classe	NEd	NRd	Rid. NRd da VEd	Mx,Ed	Mx,Rd	My,Ed	My,Rd	Rid. Mx,Rd da VEd	Rid. Mx,Rd da NEd	Rid. My,Rd da VEd	Rid. My,Rd da NEd	α	β	ρx	ρy	Verifica
78.5	SLV 9	0.085	1	-8237.7	201468.8	1	-12131	1952423	-34500	921364	1		1				0	0	Si

Verifica a presso/tenso flessione deviata SLD §§ 4.2.4.1.2.3 - 4.2.4.1.2.6 - 4.2.4.1.2.7 - 4.2.4.1.2.8 NTC18

Verifiche eseguite utilizzando la formula conservativa (6.2) §6.2.1 EN 1993-1-1:2005.

X	Comb.	Sfruttamento	Classe	NEd	NRd	Rid. NRd da VEd	Mx,Ed	Mx,Rd	My,Ed	My,Rd	Rid. Mx,Rd da VEd	Rid. Mx,Rd da NEd	Rid. My,Rd da VEd	Rid. My,Rd da NEd	α	β	ρx	ρy	Verifica
0	SLD 7	0.074	1	-8633.7	201468.8	1	54201	1952423	2880	921364	1		1				0	0	Si

Verifiche ad instabilità

Caratteristiche iniziali

Membratura principale per controllo snellezza; Calcolo di snellezze ed N critici condotti secondo gli assi principali;
Curva X: b; Curva Y: c; Svergolamento: Carico all'estradosso; Curva svergolamento: b;

Dati per instabilità attorno a x

Numero rit.	Presente	Ascissa	Campata	βx/m	Vincolo a entrambi estremi	λx/m	λVer
1	Si	0					
			1-2	1	Si	7.8	Si, (<200)
2	Si	78.5					

Dati per instabilità attorno a y

Numero rit.	Presente	Ascissa	Campata	βy/n	k,LT	kw,LT	Vincolo a entrambi estremi	λy/n	λVer
1	Si	0							
			1-2	1	1	1	Si	13.1	Si, (<200)
2	Si	78.5							

Verifica di stabilità per pressoflessione §C.4.2.4.1.3.3.2 NTC18

X	Comb.	Sfruttamento	Classe	NEd	NRk	Mx,Ed max	Mx,Rk	My,Ed max	My,Rk	χ,x	χ,y	kxx	kxy	kyx	kyy	χ,LT	Verifica
0	SLU 85	0.254	1	-32383.3	211542.2	242154.6	2050044	15.2	967432.2	1	1	0.393	0.362	0.751	0.603	1	Si

Verifica di stabilità per pressoflessione SLD §C.4.2.4.1.3.3.2 NTC18

X	Comb.	Sfruttamento	Classe	NEd	NRk	Mx,Ed max	Mx,Rk	My,Ed max	My,Rk	χ,x	χ,y	kxx	kxy	kyx	kyy	χ,LT	Verifica
0	SLD 8	0.073	1	-8633.7	211542.2	54201.4	2050044	13080.3	967432.2	1	1	0.398	0.408	0.751	0.679	1	Si

Verifica di stabilità a taglio anima Y §4.2.4.1.2.4 [4.2.27] NTC18

η	hw	tw	hw/tw max	Verifica
1.2	20.6	0.8	55.46	Si

Verifica di stabilità a taglio anima Y SLD §4.2.4.1.2.4 [4.2.27] NTC18

η	hw	tw	hw/tw max	Verifica
1.2	20.6	0.8	55.46	Si

Verifiche a deformabilità

Mensola X: No; Mensola Y: No.

Frecce lungo X

Ascissa freccia	Combinazione	Freccia	Luce	L/f	L/f,min	Tipo	Verifica
34	SLE RA 1	0	78.5	10000	250	Totale	Si
36.6	SLE RA 31	0	78.5	10000	250	Totale	Si
36.6	SLE RA 30	0	78.5	10000	250	Totale	Si
36.6	SLE RA 29	0	78.5	10000	250	Totale	Si
36.6	SLE RA 28	0	78.5	10000	250	Totale	Si
31.4	SLE RA 2	0	78.5	10000	350	Variabile	Si
26.2	SLE RA 31	0	78.5	10000	350	Variabile	Si
26.2	SLE RA 30	0	78.5	10000	350	Variabile	Si
26.2	SLE RA 29	0	78.5	10000	350	Variabile	Si
26.2	SLE RA 28	0	78.5	10000	350	Variabile	Si

Frecce lungo Y

Ascissa freccia	Combinazione	Freccia	Luce	L/f	L/f,min	Tipo	Verifica
44.5	SLE RA 1	-0.002	78.5	10000	250	Totale	Si
52.3	SLE RA 31	-0.002	78.5	10000	250	Totale	Si
44.5	SLE RA 30	-0.002	78.5	10000	250	Totale	Si
52.3	SLE RA 29	-0.002	78.5	10000	250	Totale	Si
44.5	SLE RA 28	-0.002	78.5	10000	250	Totale	Si
15.7	SLE RA 2	0.001	78.5	10000	350	Variabile	Si
60.2	SLE RA 31	-0.001	78.5	10000	350	Variabile	Si
52.3	SLE RA 30	0	78.5	10000	350	Variabile	Si
60.2	SLE RA 29	-0.001	78.5	10000	350	Variabile	Si
52.3	SLE RA 28	0	78.5	10000	350	Variabile	Si

Superelemento in acciaio composto dall'asta 51

Caratteristiche del materiale

Acciaio: S275, fyk = 2750

Caratteristiche geometriche

Lunghezza: 78.5
Nodo iniziale: 76 Nodo finale: 98
Cerniera iniziale: No Cerniera finale: No
Sovraresistenza: 0% Sisma Z: No

Caratteristiche della sezione

Sezione	Rotazione	Area	Jx	Jy	ix	iy	Wx	Wy	Wplx	Wply
HEA240	0	76.92	7771.3	2768.96	10.05	6	675.77	230.75	745.47	351.79

Verifiche di resistenza

Verifiche a forza assiale §4.2.4.1.2.1 - §4.2.4.1.2.2 NTC18

X	Comb.	Sfruttamento	Classe	NEd	Nc,Rd	Nt,Rd	Riduzione da taglio	ρx	ρy	Verifica
0	SLU 84	0.161	1	-32382.2	201468.8		1	0	0	Si

Verifiche a forza assiale SLD §4.2.4.1.2.1 - §4.2.4.1.2.2 NTC18

X	Comb.	Sfruttamento	Classe	NEd	Nc,Rd	Nt,Rd	Riduzione da taglio	ρx	ρy	Verifica
0	SLD 4	0.046	1	-9310.2	201468.8		1	0	0	Si

Verifica a taglio X §4.2.4.1.2.4 NTC18

X	Comb.	Sfruttamento	VEd	Vc,Rd	Av	Interazione taglio-torsione	Riduzione torsione	Verifica
41.8	SLV 5	0.004	343.5	83209.9	61.47	Considerata	0.9	Si

Verifica a taglio X SLD §4.2.4.1.2.4 NTC18

X	Comb.	Sfruttamento	VEd	Vc,Rd	Av	Interazione taglio-torsione	Riduzione torsione	Verifica
0	SLD 5	0.001	130.3	89385.7	61.47	Considerata	0.96	Si

Verifica a taglio Y §4.2.4.1.2.4 NTC18

X	Comb.	Sfruttamento	VEd	Vc,Rd	Av	Interazione taglio-torsione	Riduzione torsione	Verifica
0	SLU 118	0.182	6944	38202.6	25.26	Considerata	1	Si

Verifica a taglio Y SLD §4.2.4.1.2.4 NTC18

X	Comb.	Sfruttamento	VEd	Vc,Rd	Av	Interazione taglio-torsione	Riduzione torsione	Verifica
0	SLD 13	0.053	1989.7	37768.2	25.26	Considerata	0.99	Si

Verifica a torsione §4.2.4.1.2.5 NTC18

X	Comb.	Sfruttamento torsione	TEd	TRd	Riduzione taglio resistente	Sfruttamento taglio-torsione	τEd,totale	τRd	Verifica
41.8	SLV 5	0.248	-9559.7	38489.3	Considerata				Si

Verifica a torsione SLD §4.2.4.1.2.5 NTC18

X	Comb.	Sfruttamento torsione	TEd	TRd	Riduzione taglio resistente	Sfruttamento taglio-torsione	τEd,totale	τRd	Verifica
41.8	SLD 5	0.094	-3624.8	38489.3	Considerata				Si

Verifica a presso/tenso flessione retta X §§ 4.2.4.1.2.3 - 4.2.4.1.2.6 - 4.2.4.1.2.7 - 4.2.4.1.2.8 NTC18

Verifiche eseguite utilizzando la formula conservativa (6.2) §6.2.1 EN 1993-1-1:2005.

X	Comb.	Sfruttamento	Classe	NEd	NRd	Rid. NRd da VEd	Mx,Ed	Mx,Rd	Rid. Mx,Rd da VEd	Rid. Mx,Rd da NEd	ρx	ρy	Verifica
0	SLU 118	0.285	1	-32382.2	201468.8	1	242138	1952423	1		0	0	Si

Verifica a presso/tenso flessione retta Y §§ 4.2.4.1.2.3 - 4.2.4.1.2.6 - 4.2.4.1.2.7 - 4.2.4.1.2.8 NTC18

Verifiche eseguite utilizzando la formula conservativa (6.2) §6.2.1 EN 1993-1-1:2005.

X	Comb.	Sfruttamento	Classe	NEd	NRd	Rid. NRd da VEd	My,Ed	My,Rd	Rid. My,Rd da VEd	Rid. My,Rd da NEd	ρx	ρy	Verifica
34	SLV 7	0.064	1	-8741.3	201468.8	1	-19242	921364	1		0	0	Si

Verifica a presso/tenso flessione retta Y SLD §§ 4.2.4.1.2.3 - 4.2.4.1.2.6 - 4.2.4.1.2.7 - 4.2.4.1.2.8 NTC18

Verifiche eseguite utilizzando la formula conservativa (6.2) §6.2.1 EN 1993-1-1:2005.

X	Comb.	Sfruttamento	Classe	NEd	NRd	Rid. NRd da VEd	My,Ed	My,Rd	Rid. My,Rd da VEd	Rid. My,Rd da NEd	ρx	ρy	Verifica
36.6	SLD 7	0.051	1	-8531.3	201468.8	1	-7640	921364	1		0	0	Si

Verifica a presso/tenso flessione deviata §§ 4.2.4.1.2.3 - 4.2.4.1.2.6 - 4.2.4.1.2.7 - 4.2.4.1.2.8 NTC18

Verifiche eseguite utilizzando la formula conservativa (6.2) §6.2.1 EN 1993-1-1:2005.

X	Comb.	Sfruttamento	Classe	NEd	NRd	Rid. NRd da VEd	Mx,Ed	Mx,Rd	My,Ed	My,Rd	Rid. Mx,Rd da VEd	Rid. Mx,Rd da NEd	Rid. My,Rd da VEd	Rid. My,Rd da NEd	α	β	ρx	ρy	Verifica
78.5	SLV 6	0.085	1	-8237.7	201468.8	1	-12131	1952423	34500	921364	1		1				0	0	Si

Verifica a presso/tenso flessione deviata SLD §§ 4.2.4.1.2.3 - 4.2.4.1.2.6 - 4.2.4.1.2.7 - 4.2.4.1.2.8 NTC18

Verifiche eseguite utilizzando la formula conservativa (6.2) §6.2.1 EN 1993-1-1:2005.

X	Comb.	Sfruttamento	Classe	NEd	NRd	Rid. NRd da VEd	Mx,Ed	Mx,Rd	My,Ed	My,Rd	Rid. Mx,Rd da VEd	Rid. Mx,Rd da NEd	Rid. My,Rd da VEd	Rid. My,Rd da NEd	α	β	ρx	ρy	Verifica
0	SLD 11	0.074	1	-8633.7	201468.8	1	54201	1952423	-2880	921364	1		1				0	0	Si

Verifiche ad instabilità

Caratteristiche iniziali

Membratura principale per controllo snellezza; Calcolo di snellezze ed N critici condotti secondo gli assi principali;
Curva X: b; Curva Y: c; Svergolamento: Carico all'estradosso; Curva svergolamento: b;

Dati per instabilità attorno a x

Numero rit.	Presente	Ascissa	Campata	βx/m	Vincolo a entrambi estremi	λx/m	λVer
1	Si	0					
			1-2	1	Si	7.8	Si, (<200)
2	Si	78.5					

Dati per instabilità attorno a y

Numero rit.	Presente	Ascissa	Campata	βy/n	k,LT	kw,LT	Vincolo a entrambi estremi	λy/n	λVer
1	Si	0							
			1-2	1	1	1	Si	13.1	Si, (<200)
2	Si	78.5							

Verifica di stabilità per pressoflessione §C.4.2.4.1.3.3.2 NTC18

X	Comb.	Sfruttamento	Classe	NEd	NRk	Mx,Ed max	Mx,Rk	My,Ed max	My,Rk	χ,x	χ,y	kxx	kxy	kyx	kyy	χ,LT	Verifica
0	SLU 85	0.254	1	-32382.2	211542.2	242138.1	2050044	15.2	967432.2	1	1	0.393	0.362	0.751	0.604	1	Si

Verifica di stabilità per pressoflessione SLD §C.4.2.4.1.3.3.2 NTC18

X	Comb.	Sfruttamento	Classe	NEd	NRk	Mx,Ed max	Mx,Rk	My,Ed max	My,Rk	χ,x	χ,y	kxx	kxy	kyx	kyy	χ,LT	Verifica
0	SLD 11	0.073	1	-8633.7	211542.2	54201.4	2050044	13080.3	967432.2	1	1	0.398	0.408	0.751	0.679	1	Si

Verifica di stabilità a taglio anima Y §4.2.4.1.2.4 [4.2.27] NTC18

η	hw	tw	hw/tw max	Verifica
1.2	20.6	0.8	55.46	Si

Verifica di stabilità a taglio anima Y SLD §4.2.4.1.2.4 [4.2.27] NTC18

η	hw	tw	hw/tw max	Verifica
1.2	20.6	0.8	55.46	Si

Verifiche a deformabilità

Mensola X: No; Mensola Y: No.

Frecce lungo X

Ascissa freccia	Combinazione	Freccia	Luce	L/f	L/f,min	Tipo	Verifica
34	SLE RA 1	0	78.5	10000	250	Totale	Si
36.6	SLE RA 31	0	78.5	10000	250	Totale	Si
36.6	SLE RA 30	0	78.5	10000	250	Totale	Si
36.6	SLE RA 29	0	78.5	10000	250	Totale	Si
36.6	SLE RA 28	0	78.5	10000	250	Totale	Si
31.4	SLE RA 2	0	78.5	10000	350	Variabile	Si
26.2	SLE RA 31	0	78.5	10000	350	Variabile	Si
26.2	SLE RA 30	0	78.5	10000	350	Variabile	Si
26.2	SLE RA 29	0	78.5	10000	350	Variabile	Si
26.2	SLE RA 28	0	78.5	10000	350	Variabile	Si

Frecce lungo Y

Ascissa freccia	Combinazione	Freccia	Luce	L/f	L/f,min	Tipo	Verifica
44.5	SLE RA 1	-0.002	78.5	10000	250	Totale	Si
52.3	SLE RA 31	-0.002	78.5	10000	250	Totale	Si
44.5	SLE RA 30	-0.002	78.5	10000	250	Totale	Si
52.3	SLE RA 29	-0.002	78.5	10000	250	Totale	Si
44.5	SLE RA 28	-0.002	78.5	10000	250	Totale	Si
15.7	SLE RA 2	0.001	78.5	10000	350	Variabile	Si
60.2	SLE RA 31	-0.001	78.5	10000	350	Variabile	Si
52.3	SLE RA 30	0	78.5	10000	350	Variabile	Si
60.2	SLE RA 29	-0.001	78.5	10000	350	Variabile	Si
52.3	SLE RA 28	0	78.5	10000	350	Variabile	Si

Superelemento in acciaio composto dall'asta 52

Caratteristiche del materiale

Acciaio: S275, fyk = 2750

Caratteristiche geometriche

Lunghezza: 170.7
Nodo iniziale: 98 Nodo finale: 116
Cerniera iniziale: No Cerniera finale: No
Sovraresistenza: 0% Sisma Z: No

Caratteristiche della sezione

Sezione	Rotazione	Area	Jx	Jy	ix	iy	Wx	Wy	Wplx	Wply
HEA240	0	76.92	7771.3	2768.96	10.05	6	675.77	230.75	745.47	351.79

Verifiche di resistenza

Verifiche a forza assiale §4.2.4.1.2.1 - §4.2.4.1.2.2 NTC18

X	Comb.	Sfruttamento	Classe	NEd	Nc,Rd	Nt,Rd	Riduzione da taglio	ρx	ρy	Verifica
0	SLU 84	0.137	1	-27607.2	201468.8		1	0	0	Si

Verifiche a forza assiale SLD §4.2.4.1.2.1 - §4.2.4.1.2.2 NTC18

X	Comb.	Sfruttamento	Classe	NEd	Nc,Rd	Nt,Rd	Riduzione da taglio	ρx	ρy	Verifica
0	SLD 4	0.042	1	-8488.5	201468.8		1	0	0	Si

Verifica a taglio X §4.2.4.1.2.4 NTC18

X	Comb.	Sfruttamento	VEd	Vc,Rd	Av	Interazione taglio-torsione	Riduzione torsione	Verifica
56.9	SLV 10	0.003	299.1	92797.5	61.47	Considerata	1	Si

Verifica a taglio X SLD §4.2.4.1.2.4 NTC18

X	Comb.	Sfruttamento	VEd	Vc,Rd	Av	Interazione taglio-torsione	Riduzione torsione	Verifica
0	SLD 9	0.001	113.5	92896.1	61.47	Considerata	1	Si

Verifica a taglio Y §4.2.4.1.2.4 NTC18

X	Comb.	Sfruttamento	VEd	Vc,Rd	Av	Interazione taglio-torsione	Riduzione torsione	Verifica
170.7	SLU 118	0.134	-5108.1	38202.6	25.26	Considerata	1	Si

Verifica a taglio Y SLD §4.2.4.1.2.4 NTC18

X	Comb.	Sfruttamento	VEd	Vc,Rd	Av	Interazione taglio-torsione	Riduzione torsione	Verifica
170.7	SLD 2	0.081	-3110.2	38202.6	25.26	Considerata	1	Si

Verifica a torsione §4.2.4.1.2.5 NTC18

X	Comb.	Sfruttamento torsione	TEd	TRd	Riduzione taglio resistente	Sfruttamento taglio-torsione	τEd,totale	τRd	Verifica
79.6	SLV 12	0.004	-164.6	38489.3	Considerata				Si

Verifica a torsione SLD §4.2.4.1.2.5 NTC18

X	Comb.	Sfruttamento torsione	TEd	TRd	Riduzione taglio resistente	Sfruttamento taglio-torsione	τEd,totale	τRd	Verifica
170.7	SLD 12	0.002	-62.6	38489.3	Considerata				Si

Verifica a presso/tenso flessione retta X §§ 4.2.4.1.2.3 - 4.2.4.1.2.6 - 4.2.4.1.2.7 - 4.2.4.1.2.8 NTC18

Verifiche eseguite utilizzando la formula conservativa (6.2) §6.2.1 EN 1993-1-1:2005.

X	Comb.	Sfruttamento	Classe	NEd	NRd	Rid. NRd da VEd	Mx,Ed	Mx,Rd	Rid. Mx,Rd da VEd	Rid. Mx,Rd da NEd	ρx	ρy	Verifica
34.1	SLU 84	0.247	1	-27456.4	201468.8	1	-215342	1952423	1		0	0	Si

Verifica a presso/tenso flessione retta Y §§ 4.2.4.1.2.3 - 4.2.4.1.2.6 - 4.2.4.1.2.7 - 4.2.4.1.2.8 NTC18

Verifiche eseguite utilizzando la formula conservativa (6.2) §6.2.1 EN 1993-1-1:2005.

X	Comb.	Sfruttamento	Classe	NEd	NRd	Rid. NRd da VEd	My,Ed	My,Rd	Rid. My,Rd da VEd	Rid. My,Rd da NEd	ρx	ρy	Verifica
130.9	SLV 13	0.051	1	-5452.5	201468.8	1	22490	921364	1		0	0	Si

Verifica a presso/tenso flessione deviata §§ 4.2.4.1.2.3 - 4.2.4.1.2.6 - 4.2.4.1.2.7 - 4.2.4.1.2.8 NTC18

Verifiche eseguite utilizzando la formula conservativa (6.2) §6.2.1 EN 1993-1-1:2005.

X	Comb.	Sfruttamento	Classe	NEd	NRd	Rid. NRd da VEd	Mx,Ed	Mx,Rd	My,Ed	My,Rd	Rid. Mx,Rd da VEd	Rid. Mx,Rd da NEd	Rid. My,Rd da VEd	Rid. My,Rd da NEd	α	β	ρx	ρy	Verifica
170.7	SLV 6	0.182	1	-7617.9	201468.8	1	98149	1952423	86845	921364	1		1				0	0	Si

Verifica a presso/tenso flessione deviata SLD §§ 4.2.4.1.2.3 - 4.2.4.1.2.6 - 4.2.4.1.2.7 - 4.2.4.1.2.8 NTC18

Verifiche eseguite utilizzando la formula conservativa (6.2) §6.2.1 EN 1993-1-1:2005.

X	Comb.	Sfruttamento	Classe	NEd	NRd	Rid. NRd da VEd	Mx,Ed	Mx,Rd	My,Ed	My,Rd	Rid. Mx,Rd da VEd	Rid. Mx,Rd da NEd	Rid. My,Rd da VEd	Rid. My,Rd da NEd	α	β	ρx	ρy	Verifica
170.7	SLD 5	0.123	1	-7333.4	201468.8	1	98480	1952423	32938	921364	1		1				0	0	Si

Verifiche ad instabilità

Caratteristiche iniziali

Membratura principale per controllo snellezza; Calcolo di snellezze ed N critici condotti secondo gli assi principali;
Curva X: b; Curva Y: c; Svergolamento: Carico all'estradosso; Curva svergolamento: b;

Dati per instabilità attorno a x

Numero rit.	Presente	Ascissa	Campata	βx/m	Vincolo a entrambi estremi	λx/m	λVer
1	Si	0					
			1-2	1	Si	17	Si, (<200)
2	Si	170.7					

Dati per instabilità attorno a y

Numero rit.	Presente	Ascissa	Campata	βy/n	k,LT	kw,LT	Vincolo a entrambi estremi	λy/n	λVer
1	Si	0							
			1-2	1	1	1	Si	28.4	Si, (<200)
2	Si	170.7							

Verifica di stabilità per pressoflessione §C.4.2.4.1.3.3.2 NTC18

X	Comb.	Sfruttamento	Classe	NEd	NRk	Mx,Ed max	Mx,Rk	My,Ed max	My,Rk	χ,x	χ,y	kxx	kxy	kyx	kyy	χ,LT	Verifica
0	SLU 85	0.249	1	-27607.2	211542.2	215342	2050044	23.3	967432.2	1	0.935	0.888	0.35	0.928	0.584	1	Si

Verifica di stabilità per pressoflessione SLD §C.4.2.4.1.3.3.2 NTC18

X	Comb.	Sfruttamento	Classe	NEd	NRk	Mx,Ed max	Mx,Rk	My,Ed max	My,Rk	χ,x	χ,y	kxx	kxy	kyx	kyy	χ,LT	Verifica
0	SLD 5	0.116	1	-7913.5	211542.2	98479.7	2050044	32937.7	967432.2	1	0.935	0.613	0.46	0.928	0.767	1	Si

Verifica di stabilità a taglio anima Y §4.2.4.1.2.4 [4.2.27] NTC18

η	hw	tw	hw/tw max	Verifica
1.2	20.6	0.8	55.46	Si

Verifica di stabilità a taglio anima Y SLD §4.2.4.1.2.4 [4.2.27] NTC18

η	hw	tw	hw/tw max	Verifica
1.2	20.6	0.8	55.46	Si

Verifiche a deformabilità

Mensola X: No; Mensola Y: No.

Frecce lungo X

Ascissa freccia	Combinazione	Freccia	Luce	L/f	L/f,min	Tipo	Verifica
96.7	SLE RA 1	0	170.7	10000	250	Totale	Si
102.4	SLE RA 31	0	170.7	10000	250	Totale	Si
102.4	SLE RA 30	0	170.7	10000	250	Totale	Si
102.4	SLE RA 29	0	170.7	10000	250	Totale	Si

Ascissa freccia	Combinazione	Freccia	Luce	L/f	L/f,min	Tipo	Verifica
102.4	SLE RA 28	0	170.7	10000	250	Totale	Si
102.4	SLE RA 2	0	170.7	10000	350	Variabile	Si
56.9	SLE RA 31	0	170.7	10000	350	Variabile	Si
51.2	SLE RA 30	0	170.7	10000	350	Variabile	Si
56.9	SLE RA 29	0	170.7	10000	350	Variabile	Si
51.2	SLE RA 28	0	170.7	10000	350	Variabile	Si

Frecce lungo Y

Ascissa freccia	Combinazione	Freccia	Luce	L/f	L/f,min	Tipo	Verifica
74	SLE RA 19	-0.031	170.7	5484.1	250	Totale	Si
74	SLE RA 18	-0.031	170.7	5484.1	250	Totale	Si
74	SLE RA 7	-0.031	170.7	5513.8	250	Totale	Si
74	SLE RA 6	-0.031	170.7	5513.8	250	Totale	Si
74	SLE RA 15	-0.031	170.7	5518.3	250	Totale	Si
74	SLE RA 2	-0.013	170.7	10000	350	Variabile	Si
68.3	SLE RA 31	-0.01	170.7	10000	350	Variabile	Si
56.9	SLE RA 30	-0.001	170.7	10000	350	Variabile	Si
68.3	SLE RA 29	-0.01	170.7	10000	350	Variabile	Si
56.9	SLE RA 28	0	170.7	10000	350	Variabile	Si

Superelemento in acciaio composto dall'asta 53

Caratteristiche del materiale

Acciaio: S275, fyk = 2750

Caratteristiche geometriche

Lunghezza: 170.7
Nodo iniziale: 97 Nodo finale: 116
Cerniera iniziale: No Cerniera finale: No
Sovraresistenza: 0% Sisma Z: No

Caratteristiche della sezione

Sezione	Rotazione	Area	Jx	Jy	ix	iy	Wx	Wy	Wplx	Wply
HEA240	0	76.92	7771.3	2768.96	10.05	6	675.77	230.75	745.47	351.79

Verifiche di resistenza

Verifiche a forza assiale §4.2.4.1.2.1 - §4.2.4.1.2.2 NTC18

X	Comb.	Sfruttamento	Classe	NEd	Nc,Rd	Nt,Rd	Riduzione da taglio	ρx	ρy	Verifica
0	SLU 117	0.137	1	-27608	201468.8		1	0	0	Si

Verifiche a forza assiale SLD §4.2.4.1.2.1 - §4.2.4.1.2.2 NTC18

X	Comb.	Sfruttamento	Classe	NEd	Nc,Rd	Nt,Rd	Riduzione da taglio	ρx	ρy	Verifica
0	SLD 15	0.042	1	-8488.5	201468.8		1	0	0	Si

Verifica a taglio X §4.2.4.1.2.4 NTC18

X	Comb.	Sfruttamento	VEd	Vc,Rd	Av	Interazione taglio-torsione	Riduzione torsione	Verifica
68.3	SLV 6	0.003	-299.1	92797.5	61.47	Considerata	1	Si

Verifica a taglio X SLD §4.2.4.1.2.4 NTC18

X	Comb.	Sfruttamento	VEd	Vc,Rd	Av	Interazione taglio-torsione	Riduzione torsione	Verifica
0	SLD 5	0.001	-113.5	92896.1	61.47	Considerata	1	Si

Verifica a taglio Y §4.2.4.1.2.4 NTC18

X	Comb.	Sfruttamento	VEd	Vc,Rd	Av	Interazione taglio-torsione	Riduzione torsione	Verifica
170.7	SLU 118	0.134	-5108.3	38202.6	25.26	Considerata	1	Si

Verifica a taglio Y SLD §4.2.4.1.2.4 NTC18

X	Comb.	Sfruttamento	VEd	Vc,Rd	Av	Interazione taglio-torsione	Riduzione torsione	Verifica
170.7	SLD 14	0.081	-3110.2	38202.6	25.26	Considerata	1	Si

Verifica a torsione §4.2.4.1.2.5 NTC18

X	Comb.	Sfruttamento torsione	TEd	TRd	Riduzione taglio resistente	Sfruttamento taglio-torsione	τEd,totale	τRd	Verifica
170.7	SLV 8	0.004	164.6	38489.3	Considerata				Si

Verifica a torsione SLD §4.2.4.1.2.5 NTC18

X	Comb.	Sfruttamento torsione	TEd	TRd	Riduzione taglio resistente	Sfruttamento taglio-torsione	τEd,totale	τRd	Verifica
170.7	SLD 8	0.002	62.6	38489.3	Considerata				Si

Verifica a presso/tenso flessione retta X §§ 4.2.4.1.2.3 - 4.2.4.1.2.6 - 4.2.4.1.2.7 - 4.2.4.1.2.8 NTC18

Verifiche eseguite utilizzando la formula conservativa (6.2) §6.2.1 EN 1993-1-1:2005.

X	Comb.	Sfruttamento	Classe	NEd	NRd	Rid. NRd da VEd	Mx,Ed	Mx,Rd	Rid. Mx,Rd da VEd	Rid. Mx,Rd da NEd	ρx	ρy	Verifica
34.1	SLU 84	0.247	1	-27457.1	201468.8	1	-215364	1952423	1		0	0	Si

Verifica a presso/tenso flessione retta Y §§ 4.2.4.1.2.3 - 4.2.4.1.2.6 - 4.2.4.1.2.7 - 4.2.4.1.2.8 NTC18

Verifiche eseguite utilizzando la formula conservativa (6.2) §6.2.1 EN 1993-1-1:2005.

X	Comb.	Sfruttamento	Classe	NEd	NRd	Rid. NRd da VEd	My,Ed	My,Rd	Rid. My,Rd da VEd	Rid. My,Rd da NEd	ρx	ρy	Verifica
130.9	SLV 1	0.051	1	-5452.5	201468.8	1	-22490	921364	1		0	0	Si

Verifica a presso/tenso flessione deviata §§ 4.2.4.1.2.3 - 4.2.4.1.2.6 - 4.2.4.1.2.7 - 4.2.4.1.2.8 NTC18

Verifiche eseguite utilizzando la formula conservativa (6.2) §6.2.1 EN 1993-1-1:2005.

X	Comb.	Sfruttamento	Classe	NEd	NRd	Rid. NRd da VEd	Mx,Ed	Mx,Rd	My,Ed	My,Rd	Rid. Mx,Rd da VEd	Rid. Mx,Rd da NEd	Rid. My,Rd da VEd	Rid. My,Rd da NEd	α	β	ρx	ρy	Verifica
170.7	SLV 10	0.182	1	-7617.9	201468.8	1	98149	1952423	-86845	921364	1		1				0	0	Si

Verifica a presso/tenso flessione deviata SLD §§ 4.2.4.1.2.3 - 4.2.4.1.2.6 - 4.2.4.1.2.7 - 4.2.4.1.2.8 NTC18

Verifiche eseguite utilizzando la formula conservativa (6.2) §6.2.1 EN 1993-1-1:2005.

X	Comb.	Sfruttamento	Classe	NEd	NRd	Rid. NRd da VEd	Mx,Ed	Mx,Rd	My,Ed	My,Rd	Rid. Mx,Rd da VEd	Rid. Mx,Rd da NEd	Rid. My,Rd da VEd	Rid. My,Rd da NEd	α	β	ρx	ρy	Verifica
170.7	SLD 9	0.123	1	-7333.4	201468.8	1	98480	1952423	-32938	921364	1		1				0	0	Si

Verifiche ad instabilità

Caratteristiche iniziali

Membratura principale per controllo snellezza; Calcolo di snellezze ed N critici condotti secondo gli assi principali;
Curva X: b; Curva Y: c; Svergolamento: Carico all'estradosso; Curva svergolamento: b;

Dati per instabilità attorno a x

Numero rit.	Presente	Ascissa	Campata	βx/m	Vincolo a entrambi estremi	λx/m	λVer
1	Si	0					
			1-2	1	Si	17	Si, (<200)
2	Si	170.7					

Dati per instabilità attorno a y

Numero rit.	Presente	Ascissa	Campata	βy/n	k,LT	kw,LT	Vincolo a entrambi estremi	λy/n	λVer
1	Si	0							
			1-2	1	1	1	Si	28.4	Si, (<200)
2	Si	170.7							

Verifica di stabilità per pressoflessione §C.4.2.4.1.3.3.2 NTC18

X	Comb.	Sfruttamento	Classe	NEd	NRk	Mx,Ed max	Mx,Rk	My,Ed max	My,Rk	χ,x	χ,y	kxx	kxy	kyx	kyy	χ,LT	Verifica
0	SLU 85	0.249	1	-27608	211542.2	215364.4	2050044	23.3	967432.2	1	0.935	0.888	0.351	0.928	0.584	1	Si

Verifica di stabilità per pressoflessione SLD §C.4.2.4.1.3.3.2 NTC18

X	Comb.	Sfruttamento	Classe	NEd	NRk	Mx,Ed max	Mx,Rk	My,Ed max	My,Rk	χ,x	χ,y	kxx	kxy	kyx	kyy	χ,LT	Verifica
0	SLD 9	0.116	1	-7913.5	211542.2	98479.7	2050044	32937.7	967432.2	1	0.935	0.613	0.46	0.928	0.767	1	Si

Verifica di stabilità a taglio anima Y §4.2.4.1.2.4 [4.2.27] NTC18

η	hw	tw	hw/tw max	Verifica
1.2	20.6	0.8	55.46	Si

Verifica di stabilità a taglio anima Y SLD §4.2.4.1.2.4 [4.2.27] NTC18

η	hw	tw	hw/tw max	Verifica
1.2	20.6	0.8	55.46	Si

Verifiche a deformabilità

Mensola X: No; Mensola Y: No.

Frecce lungo X

Ascissa freccia	Combinazione	Freccia	Luce	L/f	L/f,min	Tipo	Verifica
96.7	SLE RA 1	0	170.7	10000	250	Totale	Si
102.4	SLE RA 31	0	170.7	10000	250	Totale	Si
102.4	SLE RA 30	0	170.7	10000	250	Totale	Si
102.4	SLE RA 29	0	170.7	10000	250	Totale	Si
102.4	SLE RA 28	0	170.7	10000	250	Totale	Si
102.4	SLE RA 2	0	170.7	10000	350	Variabile	Si
56.9	SLE RA 31	0	170.7	10000	350	Variabile	Si
51.2	SLE RA 30	0	170.7	10000	350	Variabile	Si
56.9	SLE RA 29	0	170.7	10000	350	Variabile	Si
51.2	SLE RA 28	0	170.7	10000	350	Variabile	Si

Frecce lungo Y

Ascissa freccia	Combinazione	Freccia	Luce	L/f	L/f,min	Tipo	Verifica
74	SLE RA 19	-0.031	170.7	5483.8	250	Totale	Si
74	SLE RA 18	-0.031	170.7	5483.8	250	Totale	Si
74	SLE RA 7	-0.031	170.7	5513.7	250	Totale	Si
74	SLE RA 6	-0.031	170.7	5513.7	250	Totale	Si
74	SLE RA 15	-0.031	170.7	5518.1	250	Totale	Si
74	SLE RA 2	-0.013	170.7	10000	350	Variabile	Si
68.3	SLE RA 31	-0.01	170.7	10000	350	Variabile	Si
56.9	SLE RA 30	-0.001	170.7	10000	350	Variabile	Si
68.3	SLE RA 29	-0.01	170.7	10000	350	Variabile	Si
56.9	SLE RA 28	0	170.7	10000	350	Variabile	Si

Superelemento in acciaio composto dall'asta 54

Caratteristiche del materiale

Acciaio: S275, fyk = 2750

Caratteristiche geometriche

Lunghezza: 128
Nodo iniziale: 40 Nodo finale: 39
Cerniera iniziale: Svincolo: M2, M3 Cerniera finale: No
Sovraresistenza: 0% Sisma Z: No

Caratteristiche della sezione

Sezione	Rotazione	Area	Jx	Jy	ix	iy	Wx	Wy	Wplx	Wply
HEA160	0	38.82	1674.7	615.62	6.57	3.98	220.36	76.95	245.43	117.67

Verifiche di resistenza

Verifiche a forza assiale §4.2.4.1.2.1 - §4.2.4.1.2.2 NTC18

X	Comb.	Sfruttamento	Classe	NEd	Nc,Rd	Nt,Rd	Riduzione da taglio	ρx	ρy	Verifica
119.5	SLU 85	0.102		10403.6		101662.9	1	0	0	Si

Verifiche a forza assiale SLD §4.2.4.1.2.1 - §4.2.4.1.2.2 NTC18

X	Comb.	Sfruttamento	Classe	NEd	Nc,Rd	Nt,Rd	Riduzione da taglio	ρx	ρy	Verifica
128	SLD 16	0.02		1998		101662.9	1	0	0	Si

Verifica a taglio X §4.2.4.1.2.4 NTC18

X	Comb.	Sfruttamento	VEd	Vc,Rd	Av	Interazione taglio-torsione	Riduzione torsione	Verifica
0	SLV 5	0.001	-48.6	43041.2	30.78	Considerata	0.92	Si

Verifica a taglio Y §4.2.4.1.2.4 NTC18

X	Comb.	Sfruttamento	VEd	Vc,Rd	Av	Interazione taglio-torsione	Riduzione torsione	Verifica
128	SLU 106	0.007	-144.1	20045.7	13.26	Considerata	1	Si

Verifica a taglio Y SLD §4.2.4.1.2.4 NTC18

X	Comb.	Sfruttamento	VEd	Vc,Rd	Av	Interazione taglio-torsione	Riduzione torsione	Verifica
128	SLD 16	0.003	-57	19879.9	13.26	Considerata	0.99	Si

Verifica a torsione §4.2.4.1.2.5 NTC18

X	Comb.	Sfruttamento torsione	TEd	TRd	Riduzione taglio resistente	Sfruttamento taglio-torsione	τEd,totale	τRd	Verifica
128	SLV 8	0.181	2655.4	14685.6	Considerata				Si

Verifica a torsione SLD §4.2.4.1.2.5 NTC18

X	Comb.	Sfruttamento torsione	TEd	TRd	Riduzione taglio resistente	Sfruttamento taglio-torsione	τEd,totale	τRd	Verifica
128	SLD 8	0.069	1007	14685.6	Considerata				Si

Verifica a presso/tenso flessione retta X §§ 4.2.4.1.2.3 - 4.2.4.1.2.6 - 4.2.4.1.2.7 - 4.2.4.1.2.8 NTC18

Verifiche eseguite utilizzando la formula conservativa (6.2) §6.2.1 EN 1993-1-1:2005.

X	Comb.	Sfruttamento	Classe	NEd	NRd	Rid. NRd da VEd	Mx,Ed	Mx,Rd	Rid. Mx,Rd da VEd	Rid. Mx,Rd da NEd	ρx	ρy	Verifica
128	SLU 85	0.126	1	10403.6	101662.9	1	15129	642783	1		0	0	Si

Verifica a presso/tenso flessione retta X SLD §§ 4.2.4.1.2.3 - 4.2.4.1.2.6 - 4.2.4.1.2.7 - 4.2.4.1.2.8 NTC18

Verifiche eseguite utilizzando la formula conservativa (6.2) §6.2.1 EN 1993-1-1:2005.

X	Comb.	Sfruttamento	Classe	NEd	NRd	Rid. NRd da VEd	Mx,Ed	Mx,Rd	Rid. Mx,Rd da VEd	Rid. Mx,Rd da NEd	ρx	ρy	Verifica
12.8	SLD 15	0.02	1	1998	101662.9	1	256	642783	1		0	0	Si

Verifica a presso/tenso flessione retta Y §§ 4.2.4.1.2.3 - 4.2.4.1.2.6 - 4.2.4.1.2.7 - 4.2.4.1.2.8 NTC18

Verifiche eseguite utilizzando la formula conservativa (6.2) §6.2.1 EN 1993-1-1:2005.

X	Comb.	Sfruttamento	Classe	NEd	NRd	Rid. NRd da VEd	My,Ed	My,Rd	Rid. My,Rd da VEd	Rid. My,Rd da NEd	ρx	ρy	Verifica
128	SLV 5	0.037	1	1686.7	101662.9	1	-6223	308186	1		0	0	Si

Verifica a presso/tenso flessione retta Y SLD §§ 4.2.4.1.2.3 - 4.2.4.1.2.6 - 4.2.4.1.2.7 - 4.2.4.1.2.8 NTC18

Verifiche eseguite utilizzando la formula conservativa (6.2) §6.2.1 EN 1993-1-1:2005.

X	Comb.	Sfruttamento	Classe	NEd	NRd	Rid. NRd da VEd	My,Ed	My,Rd	Rid. My,Rd da VEd	Rid. My,Rd da NEd	ρx	ρy	Verifica
98.1	SLD 6	0.023	1	1752.2	101662.9	1	-1810	308186	1		0	0	Si

Verifica a presso/tenso flessione deviata §§ 4.2.4.1.2.3 - 4.2.4.1.2.6 - 4.2.4.1.2.7 - 4.2.4.1.2.8 NTC18

Verifiche eseguite utilizzando la formula conservativa (6.2) §6.2.1 EN 1993-1-1:2005.

X	Comb.	Sfruttamento	Classe	NEd	NRd	Rid. NRd da VEd	Mx,Ed	Mx,Rd	My,Ed	My,Rd	Rid. Mx,Rd da VEd	Rid. Mx,Rd da NEd	Rid. My,Rd da VEd	Rid. My,Rd da NEd	α	β	ρx	ρy	Verifica
128	SLV 10	0.045	1	1931.1	101662.9	1	3732	642783	-6223	308186	1		1				0	0	Si

Verifica a presso/tenso flessione deviata SLD §§ 4.2.4.1.2.3 - 4.2.4.1.2.6 - 4.2.4.1.2.7 - 4.2.4.1.2.8 NTC18

Verifiche eseguite utilizzando la formula conservativa (6.2) §6.2.1 EN 1993-1-1:2005.

X	Comb.	Sfruttamento	Classe	NEd	NRd	Rid. NRd da VEd	Mx,Ed	Mx,Rd	My,Ed	My,Rd	Rid. Mx,Rd da VEd	Rid. Mx,Rd da NEd	Rid. My,Rd da VEd	Rid. My,Rd da NEd	α	β	ρx	ρy	Verifica
128	SLD 9	0.03	1	1865.6	101662.9	1	2684	642783	-2361	308186	1		1				0	0	Si

Verifiche ad instabilità

Caratteristiche iniziali

Membratura principale per controllo snellezza; Calcolo di snellezze ed N critici condotti secondo gli assi principali;

Curva X: b; Curva Y: c; Svergolamento: Carico all'estradosso; Curva svergolamento: b;

Dati per instabilità attorno a x

Numero rit.	Presente	Ascissa	Campata	βx/m	Vincolo a entrambi estremi	λx/m	λVer
1	Si	0					
			1-2	1	Si	19.5	Si, (<200)
2	Si	128					

Dati per instabilità attorno a y

Numero rit.	Presente	Ascissa	Campata	βy/n	k,LT	kw,LT	Vincolo a entrambi estremi	λy/n	λVer
1	Si	0							
			1-2	1	1	1	Si	32.1	Si, (<200)
2	Si	128							

Verifica di stabilità a taglio anima Y §4.2.4.1.2.4 [4.2.27] NTC18

η	hw	tw	hw/tw max	Verifica
1.2	13.4	0.6	55.46	Si

Verifica di stabilità a taglio anima Y SLD §4.2.4.1.2.4 [4.2.27] NTC18

η	hw	tw	hw/tw max	Verifica
1.2	13.4	0.6	55.46	Si

Verifiche a deformabilità

Mensola X: No; Mensola Y: No.

Frecce lungo X

Ascissa freccia	Combinazione	Freccia	Luce	L/f	L/f,min	Tipo	Verifica
72.5	SLE RA 1	0	128	10000	250	Totale	Si
72.5	SLE RA 31	0	128	10000	250	Totale	Si
72.5	SLE RA 30	0	128	10000	250	Totale	Si
72.5	SLE RA 29	0	128	10000	250	Totale	Si
72.5	SLE RA 28	0	128	10000	250	Totale	Si
72.5	SLE RA 2	0	128	10000	350	Variabile	Si
72.5	SLE RA 31	0	128	10000	350	Variabile	Si
72.5	SLE RA 30	0	128	10000	350	Variabile	Si
72.5	SLE RA 29	0	128	10000	350	Variabile	Si
72.5	SLE RA 28	0	128	10000	350	Variabile	Si

Frecce lungo Y

Ascissa freccia	Combinazione	Freccia	Luce	L/f	L/f,min	Tipo	Verifica
89.6	SLE RA 1	0	128	10000	250	Totale	Si
76.8	SLE RA 31	0.002	128	10000	250	Totale	Si
93.9	SLE RA 30	0	128	10000	250	Totale	Si
76.8	SLE RA 29	0.002	128	10000	250	Totale	Si
93.9	SLE RA 28	0	128	10000	250	Totale	Si
72.5	SLE RA 2	0.003	128	10000	350	Variabile	Si
72.5	SLE RA 31	0.002	128	10000	350	Variabile	Si
72.5	SLE RA 30	0	128	10000	350	Variabile	Si
72.5	SLE RA 29	0.002	128	10000	350	Variabile	Si
72.5	SLE RA 28	0	128	10000	350	Variabile	Si

Superelemento in acciaio composto dall'asta 55

Caratteristiche del materiale

Acciaio: S275, fyk = 2750

Caratteristiche geometriche

Lunghezza: 339
Nodo iniziale: 39 Nodo finale: 38
Cerniera iniziale: No Cerniera finale: No
Sovraresistenza: 0% Sisma Z: No

Caratteristiche della sezione

Sezione	Rotazione	Area	Jx	Jy	ix	iy	Wx	Wy	Wplx	Wply
HEA160	0	38.82	1674.7	615.62	6.57	3.98	220.36	76.95	245.43	117.67

Verifiche di resistenza

Verifiche a forza assiale §4.2.4.1.2.1 - §4.2.4.1.2.2 NTC18

X	Comb.	Sfruttamento	Classe	NEd	Nc,Rd	Nt,Rd	Riduzione da taglio	ρx	ρy	Verifica
339	SLU 118	0.12		12204.5		101662.9	1	0	0	Si

Verifiche a forza assiale SLD §4.2.4.1.2.1 - §4.2.4.1.2.2 NTC18

X	Comb.	Sfruttamento	Classe	NEd	Nc,Rd	Nt,Rd	Riduzione da taglio	ρx	ρy	Verifica
316.4	SLD 10	0.007		665.1		101662.9	1	0	0	Si

Verifica a taglio Y §4.2.4.1.2.4 NTC18

X	Comb.	Sfruttamento	VEd	Vc,Rd	Av	Interazione taglio-torsione	Riduzione torsione	Verifica
0	SLV 14	0.004	72.3	20045.7	13.26	Considerata	1	Si

Verifica a taglio Y SLD §4.2.4.1.2.4 NTC18

X	Comb.	Sfruttamento	VEd	Vc,Rd	Av	Interazione taglio-torsione	Riduzione torsione	Verifica
339	SLD 4	0.003	-61.2	20045.7	13.26	Considerata	1	Si

Verifica a presso/tenso flessione retta X §§ 4.2.4.1.2.3 - 4.2.4.1.2.6 - 4.2.4.1.2.7 - 4.2.4.1.2.8 NTC18

Verifiche eseguite utilizzando la formula conservativa (6.2) §6.2.1 EN 1993-1-1:2005.

X	Comb.	Sfruttamento	Classe	NEd	NRd	Rid. NRd da VEd	Mx,Ed	Mx,Rd	Rid. Mx,Rd da VEd	Rid. Mx,Rd da NEd	ρx	ρy	Verifica
169.5	SLU 118	0.146	1	12204.5	101662.9	1	-16872	642783	1		0	0	Si

Verifica a presso/tenso flessione retta Y §§ 4.2.4.1.2.3 - 4.2.4.1.2.6 - 4.2.4.1.2.7 - 4.2.4.1.2.8 NTC18

Verifiche eseguite utilizzando la formula conservativa (6.2) §6.2.1 EN 1993-1-1:2005.

X	Comb.	Sfruttamento	Classe	NEd	NRd	Rid. NRd da VEd	My,Ed	My,Rd	Rid. My,Rd da VEd	Rid. My,Rd da NEd	ρx	ρy	Verifica
22.6	SLV 11	0.015	1	665.1	101662.9	1	-2531	308186	1		0	0	Si

Verifica a presso/tenso flessione retta Y SLD §§ 4.2.4.1.2.3 - 4.2.4.1.2.6 - 4.2.4.1.2.7 - 4.2.4.1.2.8 NTC18

Verifiche eseguite utilizzando la formula conservativa (6.2) §6.2.1 EN 1993-1-1:2005.

X	Comb.	Sfruttamento	Classe	NEd	NRd	Rid. NRd da VEd	My,Ed	My,Rd	Rid. My,Rd da VEd	Rid. My,Rd da NEd	ρx	ρy	Verifica
11.3	SLD 11	0.01	1	665.1	101662.9	1	-963	308186	1		0	0	Si

Verifica a presso/tenso flessione deviata §§ 4.2.4.1.2.3 - 4.2.4.1.2.6 - 4.2.4.1.2.7 - 4.2.4.1.2.8 NTC18

Verifiche eseguite utilizzando la formula conservativa (6.2) §6.2.1 EN 1993-1-1:2005.

X	Comb.	Sfruttamento	Classe	NEd	NRd	Rid. NRd da VEd	Mx,Ed	Mx,Rd	My,Ed	My,Rd	Rid. Mx,Rd da VEd	Rid. Mx,Rd da NEd	Rid. My,Rd da VEd	Rid. My,Rd da NEd	α	β	ρx	ρy	Verifica
192.1	SLV 11	0.022	1	665.1	101662.9	1	-4450	642783	-2530	308186	1		1				0	0	Si

Verifica a presso/tenso flessione deviata SLD §§ 4.2.4.1.2.3 - 4.2.4.1.2.6 - 4.2.4.1.2.7 - 4.2.4.1.2.8 NTC18

Verifiche eseguite utilizzando la formula conservativa (6.2) §6.2.1 EN 1993-1-1:2005.

X	Comb.	Sfruttamento	Classe	NEd	NRd	Rid. NRd da VEd	Mx,Ed	Mx,Rd	My,Ed	My,Rd	Rid. Mx,Rd da VEd	Rid. Mx,Rd da NEd	Rid. My,Rd da VEd	Rid. My,Rd da NEd	α	β	ρx	ρy	Verifica
180.8	SLD 11	0.017	1	665.1	101662.9	1	-4401	642783	-962	308186	1		1				0	0	Si

Verifiche ad instabilità

Caratteristiche iniziali

Membratura principale per controllo snellezza; Calcolo di snellezze ed N critici condotti secondo gli assi principali;
Curva X: b; Curva Y: c; Svergolamento: Carico all'estradosso; Curva svergolamento: b;

Dati per instabilità attorno a x

Numero rit.	Presente	Ascissa	Campata	βx/m	Vincolo a entrambi estremi	λx/m	λVer
1	Si	0					
			1-2	1	Si	51.6	Si, (<200)
2	Si	339					

Dati per instabilità attorno a y

Numero rit.	Presente	Ascissa	Campata	βy/n	k,LT	kw,LT	Vincolo a entrambi estremi	λy/n	λVer
1	Si	0							
			1-2	1	1	1	Si	85.1	Si, (<200)
2	Si	339							

Verifica a svergolamento con trazione §4.2.4.1.3.2 NTC18 - §5.5.3 ENV 1993-1-1:1994

X	Comb.	Sfruttamento	Classe	Obblig.	NEd	Mx,Ed	Mx,Eff,Ed	Mb,Rd,x	χ,LT	λ adim. LT	L,LT	M,critico	Verifica
169.5	SLU 125	0.005	1	Si	925.8	-6037.5	-2358.6	514049.3	0.8	0.831	339	976699	Si

Verifica di stabilità per tenso-flessione deviata §5.5.3 - §5.5.4 ENV 1993-1-1:1994

X	Comb.	Sfruttamento	Classe	NEd	Mx,Ed	Mx,Eff,Ed	My,Ed	χ,LT	kLT	ky	M,critico	Wx	Wy	Verifica
192.1	SLV 12	0.012	1	665.1	-4450.4	-1807.5	-2529.8	0.8	1	1	976699	245.4	117.7	Si

Verifica di stabilità per tenso-flessione deviata SLD §5.5.3 - §5.5.4 ENV 1993-1-1:1994

X	Comb.	Sfruttamento	Classe	NEd	Mx,Ed	Mx,Eff,Ed	My,Ed	χ,LT	kLT	ky	M,critico	Wx	Wy	Verifica
180.8	SLD 12	0.007	1	665.1	-4401	-1758.1	-962.1	0.8	1	1	976699	245.4	117.7	Si

Verifica di stabilità a taglio anima Y §4.2.4.1.2.4 [4.2.27] NTC18

η	hw	tw	hw/tw max	Verifica
1.2	13.4	0.6	55.46	Si

Verifica di stabilità a taglio anima Y SLD §4.2.4.1.2.4 [4.2.27] NTC18

η	hw	tw	hw/tw max	Verifica
1.2	13.4	0.6	55.46	Si

Verifiche a deformabilità

Mensola X: No; Mensola Y: No.

Frecce lungo X

Ascissa freccia	Combinazione	Freccia	Luce	L/f	L/f,min	Tipo	Verifica
169.5	SLE RA 1	0	339	10000	250	Totale	Si
169.5	SLE RA 31	0	339	10000	250	Totale	Si
169.5	SLE RA 30	0	339	10000	250	Totale	Si
169.5	SLE RA 29	0	339	10000	250	Totale	Si
169.5	SLE RA 28	0	339	10000	250	Totale	Si
169.5	SLE RA 2	0	339	10000	350	Variabile	Si
169.5	SLE RA 31	0	339	10000	350	Variabile	Si
169.5	SLE RA 30	0	339	10000	350	Variabile	Si
169.5	SLE RA 29	0	339	10000	350	Variabile	Si

Ascissa freccia	Combinazione	Freccia	Luce	L/f	L/f,min	Tipo	Verifica
169.5	SLE RA 28	0	339	10000	350	Variabile	Si

Frecce lungo Y

Ascissa freccia	Combinazione	Freccia	Luce	L/f	L/f,min	Tipo	Verifica
169.5	SLE RA 19	-0.046	339	7376.2	250	Totale	Si
169.5	SLE RA 18	-0.046	339	7376.2	250	Totale	Si
169.5	SLE RA 7	-0.046	339	7434.9	250	Totale	Si
169.5	SLE RA 6	-0.046	339	7434.9	250	Totale	Si
169.5	SLE RA 15	-0.046	339	7446	250	Totale	Si
169.5	SLE RA 2	-0.03	339	10000	350	Variabile	Si
169.5	SLE RA 31	-0.024	339	10000	350	Variabile	Si
169.5	SLE RA 30	-0.001	339	10000	350	Variabile	Si
169.5	SLE RA 29	-0.023	339	10000	350	Variabile	Si
169.5	SLE RA 28	-0.001	339	10000	350	Variabile	Si

Superelemento in acciaio composto dall'asta 56

Caratteristiche del materiale

Acciaio: S275, fyk = 2750

Caratteristiche geometriche

Lunghezza: 128
Nodo iniziale: 38 Nodo finale: 37
Cerniera iniziale: No Cerniera finale: Svincolo: M2, M3
Sovraresistenza: 0% Sisma Z: No

Caratteristiche della sezione

Sezione	Rotazione	Area	Jx	Jy	ix	iy	Wx	Wy	Wplx	Wply
HEA160	0	38.82	1674.7	615.62	6.57	3.98	220.36	76.95	245.43	117.67

Verifiche di resistenza

Verifiche a forza assiale §4.2.4.1.2.1 - §4.2.4.1.2.2 NTC18

X	Comb.	Sfruttamento	Classe	NEd	Nc,Rd	Nt,Rd	Riduzione da taglio	ρx	ρy	Verifica
128	SLU 118	0.102		10404.3		101662.9	1	0	0	Si

Verifiche a forza assiale SLD §4.2.4.1.2.1 - §4.2.4.1.2.2 NTC18

X	Comb.	Sfruttamento	Classe	NEd	Nc,Rd	Nt,Rd	Riduzione da taglio	ρx	ρy	Verifica
128	SLD 3	0.02		1998		101662.9	1	0	0	Si

Verifica a taglio X §4.2.4.1.2.4 NTC18

X	Comb.	Sfruttamento	VEd	Vc,Rd	Av	Interazione taglio-torsione	Riduzione torsione	Verifica
0	SLV 9	0.001	48.6	43041.2	30.78	Considerata	0.92	Si

Verifica a taglio Y §4.2.4.1.2.4 NTC18

X	Comb.	Sfruttamento	VEd	Vc,Rd	Av	Interazione taglio-torsione	Riduzione torsione	Verifica
0	SLU 73	0.007	144.1	20045.7	13.26	Considerata	1	Si

Verifica a taglio Y SLD §4.2.4.1.2.4 NTC18

X	Comb.	Sfruttamento	VEd	Vc,Rd	Av	Interazione taglio-torsione	Riduzione torsione	Verifica
0	SLD 3	0.003	57	19879.9	13.26	Considerata	0.99	Si

Verifica a torsione §4.2.4.1.2.5 NTC18

X	Comb.	Sfruttamento torsione	TEd	TRd	Riduzione taglio resistente	Sfruttamento taglio-torsione	τEd,totale	τRd	Verifica
59.7	SLV 12	0.181	-2655.4	14685.6	Considerata				Si

Verifica a torsione SLD §4.2.4.1.2.5 NTC18

X	Comb.	Sfruttamento torsione	TEd	TRd	Riduzione taglio resistente	Sfruttamento taglio-torsione	τEd,totale	τRd	Verifica
59.7	SLD 12	0.069	-1007	14685.6	Considerata				Si

Verifica a presso/tenso flessione retta X §§ 4.2.4.1.2.3 - 4.2.4.1.2.6 - 4.2.4.1.2.7 - 4.2.4.1.2.8 NTC18

Verifiche eseguite utilizzando la formula conservativa (6.2) §6.2.1 EN 1993-1-1:2005.

X	Comb.	Sfruttamento	Classe	NEd	NRd	Rid. NRd da VEd	Mx,Ed	Mx,Rd	Rid. Mx,Rd da VEd	Rid. Mx,Rd da NEd	ρx	ρy	Verifica
0	SLU 118	0.126	1	10404.3	101662.9	1	15129	642783	1		0	0	Si

Verifica a presso/tenso flessione retta X SLD §§ 4.2.4.1.2.3 - 4.2.4.1.2.6 - 4.2.4.1.2.7 - 4.2.4.1.2.8 NTC18

Verifiche eseguite utilizzando la formula conservativa (6.2) §6.2.1 EN 1993-1-1:2005.

X	Comb.	Sfruttamento	Classe	NEd	NRd	Rid. NRd da VEd	Mx,Ed	Mx,Rd	Rid. Mx,Rd da VEd	Rid. Mx,Rd da NEd	ρx	ρy	Verifica
115.2	SLD 3	0.02	1	1998	101662.9	1	256	642783	1		0	0	Si

Verifica a presso/tenso flessione retta Y §§ 4.2.4.1.2.3 - 4.2.4.1.2.6 - 4.2.4.1.2.7 - 4.2.4.1.2.8 NTC18

Verifiche eseguite utilizzando la formula conservativa (6.2) §6.2.1 EN 1993-1-1:2005.

X	Comb.	Sfruttamento	Classe	NEd	NRd	Rid. NRd da VEd	My,Ed	My,Rd	Rid. My,Rd da VEd	Rid. My,Rd da NEd	ρx	ρy	Verifica
0	SLV 10	0.037	1	1686.7	101662.9	1	-6223	308186	1		0	0	Si

Verifica a presso/tenso flessione retta Y SLD §§ 4.2.4.1.2.3 - 4.2.4.1.2.6 - 4.2.4.1.2.7 - 4.2.4.1.2.8 NTC18

Verifiche eseguite utilizzando la formula conservativa (6.2) §6.2.1 EN 1993-1-1:2005.

X	Comb.	Sfruttamento	Classe	NEd	NRd	Rid. NRd da VEd	My,Ed	My,Rd	Rid. My,Rd da VEd	Rid. My,Rd da NEd	ρx	ρy	Verifica
29.9	SLD 10	0.023	1	1752.2	101662.9	1	-1810	308186	1		0	0	Si

Verifica a presso/tenso flessione deviata §§ 4.2.4.1.2.3 - 4.2.4.1.2.6 - 4.2.4.1.2.7 - 4.2.4.1.2.8 NTC18

Verifiche eseguite utilizzando la formula conservativa (6.2) §6.2.1 EN 1993-1-1:2005.

X	Comb.	Sfruttamento	Classe	NEd	NRd	Rid. NRd da VEd	Mx,Ed	Mx,Rd	My,Ed	My,Rd	Rid. Mx,Rd da VEd	Rid. Mx,Rd da NEd	Rid. My,Rd da VEd	Rid. My,Rd da NEd	α	β	ρx	ρy	Verifica
0	SLV 5	0.045	1	1931.1	101662.9	1	3732	642783	-6223	308186	1		1				0	0	Si

Verifica a presso/tenso flessione deviata SLD §§ 4.2.4.1.2.3 - 4.2.4.1.2.6 - 4.2.4.1.2.7 - 4.2.4.1.2.8 NTC18

Verifiche eseguite utilizzando la formula conservativa (6.2) §6.2.1 EN 1993-1-1:2005.

X	Comb.	Sfruttamento	Classe	NEd	NRd	Rid. NRd da VEd	Mx,Ed	Mx,Rd	My,Ed	My,Rd	Rid. Mx,Rd da VEd	Rid. Mx,Rd da NEd	Rid. My,Rd da VEd	Rid. My,Rd da NEd	α	β	ρx	ρy	Verifica
0	SLD 6	0.03	1	1865.6	101662.9	1	2684	642783	-2361	308186	1		1				0	0	Si

Verifiche ad instabilità

Caratteristiche iniziali

Membratura principale per controllo snellezza; Calcolo di snellezze ed N critici condotti secondo gli assi principali;
Curva X: b; Curva Y: c; Svergolamento: Carico all'estradosso; Curva svergolamento: b;

Dati per instabilità attorno a x

Numero rit.	Presente	Ascissa	Campata	βx/m	Vincolo a entrambi estremi	λx/m	λVer
1	Si	0					
			1-2	1	Si	19.5	Si, (<200)
2	Si	128					

Dati per instabilità attorno a y

Numero rit.	Presente	Ascissa	Campata	βy/n	k,LT	kw,LT	Vincolo a entrambi estremi	λy/n	λVer
1	Si	0							
			1-2	1	1	1	Si	32.1	Si, (<200)
2	Si	128							

Verifica di stabilità a taglio anima Y §4.2.4.1.2.4 [4.2.27] NTC18

η	hw	tw	hw/tw max	Verifica
1.2	13.4	0.6	55.46	Si

Verifica di stabilità a taglio anima Y SLD §4.2.4.1.2.4 [4.2.27] NTC18

η	hw	tw	hw/tw max	Verifica
1.2	13.4	0.6	55.46	Si

Verifiche a deformabilità

Mensola X: No; Mensola Y: No.

Frecce lungo X

Ascissa freccia	Combinazione	Freccia	Luce	L/f	L/f,min	Tipo	Verifica
55.5	SLE RA 1	0	128	10000	250	Totale	Si
55.5	SLE RA 31	0	128	10000	250	Totale	Si
55.5	SLE RA 30	0	128	10000	250	Totale	Si
55.5	SLE RA 29	0	128	10000	250	Totale	Si
55.5	SLE RA 28	0	128	10000	250	Totale	Si
55.5	SLE RA 2	0	128	10000	350	Variabile	Si
55.5	SLE RA 31	0	128	10000	350	Variabile	Si
55.5	SLE RA 30	0	128	10000	350	Variabile	Si
55.5	SLE RA 29	0	128	10000	350	Variabile	Si
55.5	SLE RA 28	0	128	10000	350	Variabile	Si

Frecce lungo Y

Ascissa freccia	Combinazione	Freccia	Luce	L/f	L/f,min	Tipo	Verifica
38.4	SLE RA 1	0	128	10000	250	Totale	Si
51.2	SLE RA 31	0.002	128	10000	250	Totale	Si
34.1	SLE RA 30	0	128	10000	250	Totale	Si
51.2	SLE RA 29	0.002	128	10000	250	Totale	Si
34.1	SLE RA 28	0	128	10000	250	Totale	Si
55.5	SLE RA 2	0.003	128	10000	350	Variabile	Si
55.5	SLE RA 31	0.002	128	10000	350	Variabile	Si
55.5	SLE RA 30	0	128	10000	350	Variabile	Si
55.5	SLE RA 29	0.002	128	10000	350	Variabile	Si
55.5	SLE RA 28	0	128	10000	350	Variabile	Si

Superelemento in acciaio composto dall'asta 57

Caratteristiche del materiale

Acciaio: S275, fyk = 2750

Caratteristiche geometriche

Lunghezza: 197.7
Nodo iniziale: 9 Nodo finale: 39

Cerniera iniziale: Svincolo: M2, M3 Cerniera finale: Svincolo: M2, M3
Sovraresistenza: 0% Sisma Z: No

Caratteristiche della sezione

Sezione	Rotazione	Area	Jx	Jy	ix	iy	Wx	Wy	Wplx	Wply
HEA160	0	38.82	1674.7	615.62	6.57	3.98	220.36	76.95	245.43	117.67

Verifiche di resistenza

Verifiche a forza assiale §4.2.4.1.2.1 - §4.2.4.1.2.2 NTC18

X	Comb.	Sfruttamento	Classe	NEd	Nc,Rd	Nt,Rd	Riduzione da taglio	ρx	ρy	Verifica
0	SLU 85	0.239	1	-24309.1	101662.9		1	0	0	Si

Verifiche a forza assiale SLD §4.2.4.1.2.1 - §4.2.4.1.2.2 NTC18

X	Comb.	Sfruttamento	Classe	NEd	Nc,Rd	Nt,Rd	Riduzione da taglio	ρx	ρy	Verifica
0	SLD 16	0.067	1	-6777.8	101662.9		1	0	0	Si

Verifica a taglio Y §4.2.4.1.2.4 NTC18

X	Comb.	Sfruttamento	VEd	Vc,Rd	Av	Interazione taglio-torsione	Riduzione torsione	Verifica
197.7	SLU 79	0.002	-33.8	20045.7	13.26	Considerata	1	Si

Verifica a taglio Y SLD §4.2.4.1.2.4 NTC18

X	Comb.	Sfruttamento	VEd	Vc,Rd	Av	Interazione taglio-torsione	Riduzione torsione	Verifica
197.7	SLD 12	0.001	-26	19633	13.26	Considerata	0.98	Si

Verifica a torsione §4.2.4.1.2.5 NTC18

X	Comb.	Sfruttamento torsione	TEd	TRd	Riduzione taglio resistente	Sfruttamento taglio-torsione	τEd,totale	τRd	Verifica
197.7	SLV 11	0.134	1971.7	14685.6	Considerata				Si

Verifica a torsione SLD §4.2.4.1.2.5 NTC18

X	Comb.	Sfruttamento torsione	TEd	TRd	Riduzione taglio resistente	Sfruttamento taglio-torsione	τEd,totale	τRd	Verifica
92.2	SLD 12	0.051	748.1	14685.6	Considerata				Si

Verifica a presso/tenso flessione retta X §§ 4.2.4.1.2.3 - 4.2.4.1.2.6 - 4.2.4.1.2.7 - 4.2.4.1.2.8 NTC18

Verifiche eseguite utilizzando la formula conservativa (6.2) §6.2.1 EN 1993-1-1:2005.

X	Comb.	Sfruttamento	Classe	NEd	NRd	Rid. NRd da VEd	Mx,Ed	Mx,Rd	Rid. Mx,Rd da VEd	Rid. Mx,Rd da NEd	ρx	ρy	Verifica
92.2	SLU 85	0.242	1	-24290.6	101662.9	1	-1661	642783	1		0	0	Si

Verifica a presso/tenso flessione retta X SLD §§ 4.2.4.1.2.3 - 4.2.4.1.2.6 - 4.2.4.1.2.7 - 4.2.4.1.2.8 NTC18

Verifiche eseguite utilizzando la formula conservativa (6.2) §6.2.1 EN 1993-1-1:2005.

X	Comb.	Sfruttamento	Classe	NEd	NRd	Rid. NRd da VEd	Mx,Ed	Mx,Rd	Rid. Mx,Rd da VEd	Rid. Mx,Rd da NEd	ρx	ρy	Verifica
92.2	SLD 15	0.069	1	-6763.6	101662.9	1	-1278	642783	1		0	0	Si

Verifiche ad instabilità

Caratteristiche iniziali

Membratura principale per controllo snellezza; Calcolo di snellezze ed N critici condotti secondo gli assi principali;
Curva X: b; Curva Y: c; Svergolamento: Carico all'estradosso; Curva svergolamento: b;

Dati per instabilità attorno a x

Numero rit.	Presente	Ascissa	Campata	βx/m	Vincolo a entrambi estremi	λx/m	λVer
1	Si	0					
			1-2	1	Si	30.1	Si, (<200)
2	Si	197.7					

Dati per instabilità attorno a y

Numero rit.	Presente	Ascissa	Campata	βy/n	k,LT	kw,LT	Vincolo a entrambi estremi	λy/n	λVer
1	Si	0							
			1-2	1	1	1	Si	49.6	Si, (<200)
2	Si	197.7							

Verifica di stabilità per pressoflessione §C.4.2.4.1.3.3.2 NTC18

X	Comb.	Sfruttamento	Classe	NEd	NRk	Mx,Ed max	Mx,Rk	My,Ed max	My,Rk	χ,x	χ,y	kxx	kxy	kyx	kyy	χ,LT	Verifica
0	SLU 85	0.301	1	-24309.1	106746.1	1668.7	674922.6	1.5	323595.1	0.947	0.802	0.985	0.662	0.976	1.104	0.933	Si

Verifica di stabilità per pressoflessione SLD §C.4.2.4.1.3.3.2 NTC18

X	Comb.	Sfruttamento	Classe	NEd	NRk	Mx,Ed max	Mx,Rk	My,Ed max	My,Rk	χ,x	χ,y	kxx	kxy	kyx	kyy	χ,LT	Verifica
0	SLD 16	0.085	1	-6777.8	106746.1	1283.6	674922.6	1.1	323595.1	0.947	0.802	0.96	0.596	0.993	0.993	0.933	Si

Verifica di stabilità a taglio anima Y §4.2.4.1.2.4 [4.2.27] NTC18

η	hw	tw	hw/tw max	Verifica
1.2	13.4	0.6	55.46	Si

Verifica di stabilità a taglio anima Y SLD §4.2.4.1.2.4 [4.2.27] NTC18

η	hw	tw	hw/tw max	Verifica
1.2	13.4	0.6	55.46	Si

Verifiche a deformabilità

Mensola X: No; Mensola Y: No.

Frecce lungo X

Ascissa freccia	Combinazione	Freccia	Luce	L/f	L/f,min	Tipo	Verifica
98.8	SLE RA 1	0	197.7	10000	250	Totale	Si
98.8	SLE RA 31	0	197.7	10000	250	Totale	Si
98.8	SLE RA 30	0	197.7	10000	250	Totale	Si
98.8	SLE RA 29	0	197.7	10000	250	Totale	Si
98.8	SLE RA 28	0	197.7	10000	250	Totale	Si
191.1	SLE RA 2	0	197.7	10000	350	Variabile	Si
171.3	SLE RA 31	0	197.7	10000	350	Variabile	Si
191.1	SLE RA 30	0	197.7	10000	350	Variabile	Si
151.5	SLE RA 29	0	197.7	10000	350	Variabile	Si
177.9	SLE RA 28	0	197.7	10000	350	Variabile	Si

Frecce lungo Y

Ascissa freccia	Combinazione	Freccia	Luce	L/f	L/f,min	Tipo	Verifica
98.8	SLE RA 1	-0.002	197.7	10000	250	Totale	Si
98.8	SLE RA 31	-0.002	197.7	10000	250	Totale	Si
98.8	SLE RA 30	-0.002	197.7	10000	250	Totale	Si
98.8	SLE RA 29	-0.002	197.7	10000	250	Totale	Si
98.8	SLE RA 28	-0.002	197.7	10000	250	Totale	Si
184.5	SLE RA 2	0	197.7	10000	350	Variabile	Si
184.5	SLE RA 31	0	197.7	10000	350	Variabile	Si
184.5	SLE RA 30	0	197.7	10000	350	Variabile	Si
184.5	SLE RA 29	0	197.7	10000	350	Variabile	Si
151.5	SLE RA 28	0	197.7	10000	350	Variabile	Si

Superelemento in acciaio composto dall'asta 58

Caratteristiche del materiale

Acciaio: S275, fyk = 2750

Caratteristiche geometriche

Lunghezza: 197.7
Nodo iniziale: 8 Nodo finale: 38
Cerniera iniziale: Svincolo: M2, M3 Cerniera finale: Svincolo: M2, M3
Sovraresistenza: 0% Sisma Z: No

Caratteristiche della sezione

Sezione	Rotazione	Area	Jx	Jy	ix	iy	Wx	Wy	Wplx	Wply
HEA160	0	38.82	1674.7	615.62	6.57	3.98	220.36	76.95	245.43	117.67

Verifiche di resistenza

Verifiche a forza assiale §4.2.4.1.2.1 - §4.2.4.1.2.2 NTC18

X	Comb.	Sfruttamento	Classe	NEd	Nc,Rd	Nt,Rd	Riduzione da taglio	ρx	ρy	Verifica
0	SLU 85	0.239	1	-24308.6	101662.9		1	0	0	Si

Verifiche a forza assiale SLD §4.2.4.1.2.1 - §4.2.4.1.2.2 NTC18

X	Comb.	Sfruttamento	Classe	NEd	Nc,Rd	Nt,Rd	Riduzione da taglio	ρx	ρy	Verifica
0	SLD 3	0.067	1	-6777.8	101662.9		1	0	0	Si

Verifica a taglio Y §4.2.4.1.2.4 NTC18

X	Comb.	Sfruttamento	VEd	Vc,Rd	Av	Interazione taglio-torsione	Riduzione torsione	Verifica
197.7	SLU 79	0.002	-33.8	20045.7	13.26	Considerata	1	Si

Verifica a taglio Y SLD §4.2.4.1.2.4 NTC18

X	Comb.	Sfruttamento	VEd	Vc,Rd	Av	Interazione taglio-torsione	Riduzione torsione	Verifica
197.7	SLD 8	0.001	-26	19633	13.26	Considerata	0.98	Si

Verifica a torsione §4.2.4.1.2.5 NTC18

X	Comb.	Sfruttamento torsione	TEd	TRd	Riduzione taglio resistente	Sfruttamento taglio-torsione	τEd,totale	τRd	Verifica
197.7	SLV 8	0.134	-1971.7	14685.6	Considerata				Si

Verifica a torsione SLD §4.2.4.1.2.5 NTC18

X	Comb.	Sfruttamento torsione	TEd	TRd	Riduzione taglio resistente	Sfruttamento taglio-torsione	τEd,totale	τRd	Verifica
197.7	SLD 8	0.051	-748.1	14685.6	Considerata				Si

Verifica a presso/tenso flessione retta X §§ 4.2.4.1.2.3 - 4.2.4.1.2.6 - 4.2.4.1.2.7 - 4.2.4.1.2.8 NTC18

Verifiche eseguite utilizzando la formula conservativa (6.2) §6.2.1 EN 1993-1-1:2005.

X	Comb.	Sfruttamento	Classe	NEd	NRd	Rid. NRd da VEd	Mx,Ed	Mx,Rd	Rid. Mx,Rd da VEd	Rid. Mx,Rd da NEd	ρx	ρy	Verifica
92.2	SLU 118	0.242	1	-24290.2	101662.9	1	-1661	642783	1		0	0	Si

Verifica a presso/tenso flessione retta X SLD §§ 4.2.4.1.2.3 - 4.2.4.1.2.6 - 4.2.4.1.2.7 - 4.2.4.1.2.8 NTC18

Verifiche eseguite utilizzando la formula conservativa (6.2) §6.2.1 EN 1993-1-1:2005.

X	Comb.	Sfruttamento	Classe	NEd	NRd	Rid. NRd da VEd	Mx,Ed	Mx,Rd	Rid. Mx,Rd da VEd	Rid. Mx,Rd da NEd	ρx	ρy	Verifica
92.2	SLD 4	0.069	1	-6763.6	101662.9	1	-1278	642783	1		0	0	Si

Verifiche ad instabilità

Caratteristiche iniziali

Membratura principale per controllo snellezza; Calcolo di snellezze ed N critici condotti secondo gli assi principali;
Curva X: b; Curva Y: c; Svergolamento: Carico all'estradosso; Curva svergolamento: b;

Dati per instabilità attorno a x

Numero rit.	Presente	Ascissa	Campata	βx/m	Vincolo a entrambi estremi	λx/m	λVer
1	Si	0					
			1-2	1	Si	30.1	Si, (<200)
2	Si	197.7					

Dati per instabilità attorno a y

Numero rit.	Presente	Ascissa	Campata	βy/n	k,LT	kw,LT	Vincolo a entrambi estremi	λy/n	λVer
1	Si	0							
			1-2	1	1	1	Si	49.6	Si, (<200)
2	Si	197.7							

Verifica di stabilità per pressoflessione §C.4.2.4.1.3.3.2 NTC18

X	Comb.	Sfruttamento	Classe	NEd	NRk	Mx,Ed max	Mx,Rk	My,Ed max	My,Rk	χ,x	χ,y	kxx	kxy	kyx	kyy	χ,LT	Verifica
0	SLU 85	0.301	1	-24308.6	106746.1	1668.7	674922.6	0	323595.1	0.947	0.802	0.985	0.418	0.976	0.697	0.933	Si

Verifica di stabilità per pressoflessione SLD §C.4.2.4.1.3.3.2 NTC18

X	Comb.	Sfruttamento	Classe	NEd	NRk	Mx,Ed max	Mx,Rk	My,Ed max	My,Rk	χ,x	χ,y	kxx	kxy	kyx	kyy	χ,LT	Verifica
0	SLD 3	0.085	1	-6777.8	106746.1	1283.6	674922.6	0	323595.1	0.947	0.802	0.96	0.376	0.993	0.627	0.933	Si

Verifica di stabilità a taglio anima Y §4.2.4.1.2.4 [4.2.27] NTC18

η	hw	tw	hw/tw max	Verifica
1.2	13.4	0.6	55.46	Si

Verifica di stabilità a taglio anima Y SLD §4.2.4.1.2.4 [4.2.27] NTC18

η	hw	tw	hw/tw max	Verifica
1.2	13.4	0.6	55.46	Si

Verifiche a deformabilità

Mensola X: No; Mensola Y: No.

Frecce lungo X

Ascissa freccia	Combinazione	Freccia	Luce	L/f	L/f,min	Tipo	Verifica
164.7	SLE RA 1	0	197.7	10000	250	Totale	Si
164.7	SLE RA 31	0	197.7	10000	250	Totale	Si
164.7	SLE RA 30	0	197.7	10000	250	Totale	Si
164.7	SLE RA 29	0	197.7	10000	250	Totale	Si
164.7	SLE RA 28	0	197.7	10000	250	Totale	Si
171.3	SLE RA 2	0	197.7	10000	350	Variabile	Si
191.1	SLE RA 31	0	197.7	10000	350	Variabile	Si
191.1	SLE RA 30	0	197.7	10000	350	Variabile	Si
191.1	SLE RA 29	0	197.7	10000	350	Variabile	Si
191.1	SLE RA 28	0	197.7	10000	350	Variabile	Si

Frecce lungo Y

Ascissa freccia	Combinazione	Freccia	Luce	L/f	L/f,min	Tipo	Verifica
98.8	SLE RA 1	-0.002	197.7	10000	250	Totale	Si
98.8	SLE RA 31	-0.002	197.7	10000	250	Totale	Si
98.8	SLE RA 30	-0.002	197.7	10000	250	Totale	Si
98.8	SLE RA 29	-0.002	197.7	10000	250	Totale	Si
98.8	SLE RA 28	-0.002	197.7	10000	250	Totale	Si
125.2	SLE RA 2	0	197.7	10000	350	Variabile	Si
112	SLE RA 31	0	197.7	10000	350	Variabile	Si
184.5	SLE RA 30	0	197.7	10000	350	Variabile	Si
112	SLE RA 29	0	197.7	10000	350	Variabile	Si
131.8	SLE RA 28	0	197.7	10000	350	Variabile	Si

Superelemento in acciaio composto dall'asta 59

Caratteristiche del materiale

Acciaio: S275, fyk = 2750

Caratteristiche geometriche

Lunghezza: 88.1
Nodo iniziale: 39 Nodo finale: 76
Cerniera iniziale: Svincolo: M2, M3 Cerniera finale: Svincolo: M2, M3
Sovraresistenza: 0% Sisma Z: No

Caratteristiche della sezione

Sezione	Rotazione	Area	Jx	Jy	ix	iy	Wx	Wy	Wplx	Wply
HEA160	0	38.82	1674.7	615.62	6.57	3.98	220.36	76.95	245.43	117.67

Verifiche di resistenza

Verifiche a forza assiale §4.2.4.1.2.1 - §4.2.4.1.2.2 NTC18

X	Comb.	Sfruttamento	Classe	NEd	Nc,Rd	Nt,Rd	Riduzione da taglio	ρx	ρy	Verifica
88.1	SLU 3	0.02		2025.8		101662.9	1	0	0	Si

Verifiche a forza assiale SLD §4.2.4.1.2.1 - §4.2.4.1.2.2 NTC18

X	Comb.	Sfruttamento	Classe	NEd	Nc,Rd	Nt,Rd	Riduzione da taglio	ρx	ρy	Verifica
0	SLD 16	0.005	1	-507.4	101662.9		1	0	0	Si

Verifica a taglio Y §4.2.4.1.2.4 NTC18

X	Comb.	Sfruttamento	VEd	Vc,Rd	Av	Interazione taglio-torsione	Riduzione torsione	Verifica
0	SLU 84	0.001	14.4	20045.7	13.26	Considerata	1	Si

Verifica a torsione §4.2.4.1.2.5 NTC18

X	Comb.	Sfruttamento torsione	TEd	TRd	Riduzione taglio resistente	Sfruttamento taglio-torsione	τEd,totale	τRd	Verifica
88.1	SLV 10	0.056	-826.6	14685.6	Considerata				Si

Verifica a torsione SLD §4.2.4.1.2.5 NTC18

X	Comb.	Sfruttamento torsione	TEd	TRd	Riduzione taglio resistente	Sfruttamento taglio-torsione	τEd,totale	τRd	Verifica
88.1	SLD 10	0.021	-313.5	14685.6	Considerata				Si

Verifica a presso/tenso flessione retta X §§ 4.2.4.1.2.3 - 4.2.4.1.2.6 - 4.2.4.1.2.7 - 4.2.4.1.2.8 NTC18

Verifiche eseguite utilizzando la formula conservativa (6.2) §6.2.1 EN 1993-1-1:2005.

X	Comb.	Sfruttamento	Classe	NEd	NRd	Rid. NRd da VEd	Mx,Ed	Mx,Rd	Rid. Mx,Rd da VEd	Rid. Mx,Rd da NEd	ρx	ρy	Verifica
47	SLU 36	0.02	1	2018.7	101662.9	1	-242	642783	1		0	0	Si

Verifica a presso/tenso flessione retta X SLD §§ 4.2.4.1.2.3 - 4.2.4.1.2.6 - 4.2.4.1.2.7 - 4.2.4.1.2.8 NTC18

Verifiche eseguite utilizzando la formula conservativa (6.2) §6.2.1 EN 1993-1-1:2005.

X	Comb.	Sfruttamento	Classe	NEd	NRd	Rid. NRd da VEd	Mx,Ed	Mx,Rd	Rid. Mx,Rd da VEd	Rid. Mx,Rd da NEd	ρx	ρy	Verifica
41.1	SLD 15	0.005	1	-500.2	101662.9	1	-242	642783	1		0	0	Si

Verifiche ad instabilità

Caratteristiche iniziali

Membratura principale per controllo snellezza; Calcolo di snellezze ed N critici condotti secondo gli assi principali;
Curva X: b; Curva Y: c; Svergolamento: Carico all'estradosso; Curva svergolamento: b;

Dati per instabilità attorno a x

Numero rit.	Presente	Ascissa	Campata	βx/m	Vincolo a entrambi estremi	λx/m	λVer
1	Si	0					
			1-2	1	Si	13.4	Si, (<200)
2	Si	88.1					

Dati per instabilità attorno a y

Numero rit.	Presente	Ascissa	Campata	βy/n	k,LT	kw,LT	Vincolo a entrambi estremi	λy/n	λVer
1	Si	0							
			1-2	1	1	1	Si	22.1	Si, (<200)
2	Si	88.1							

Verifica di stabilità per pressoflessione §C.4.2.4.1.3.3.2 NTC18

X	Comb.	Sfruttamento	Classe	NEd	NRk	Mx,Ed max	Mx,Rk	My,Ed max	My,Rk	χ,x	χ,y	kxx	kxy	kyx	kyy	χ,LT	Verifica
0	SLU 129	0.008	1	-772.1	106746.1	316.2	674922.6	0	323595.1	1	0.972	0.95	0.36	0.855	0.6	1	Si

Verifica di stabilità per pressoflessione SLD §C.4.2.4.1.3.3.2 NTC18

X	Comb.	Sfruttamento	Classe	NEd	NRk	Mx,Ed max	Mx,Rk	My,Ed max	My,Rk	χ,x	χ,y	kxx	kxy	kyx	kyy	χ,LT	Verifica
0	SLD 16	0.005	1	-507.4	106746.1	243.2	674922.6	0	323595.1	1	0.972	0.95	0.36	0.855	0.6	1	Si

Verifica di stabilità a taglio anima Y §4.2.4.1.2.4 [4.2.27] NTC18

η	hw	tw	hw/tw max	Verifica
1.2	13.4	0.6	55.46	Si

Verifica di stabilità a taglio anima Y SLD §4.2.4.1.2.4 [4.2.27] NTC18

η	hw	tw	hw/tw max	Verifica
1.2	13.4	0.6	55.46	Si

Verifiche a deformabilità

Mensola X: No; Mensola Y: No.

Frecce lungo X

Ascissa freccia	Combinazione	Freccia	Luce	L/f	L/f,min	Tipo	Verifica
41.1	SLE RA 1	0	88.1	10000	250	Totale	Si
47	SLE RA 31	0	88.1	10000	250	Totale	Si
47	SLE RA 30	0	88.1	10000	250	Totale	Si
47	SLE RA 29	0	88.1	10000	250	Totale	Si
47	SLE RA 28	0	88.1	10000	250	Totale	Si
11.7	SLE RA 2	0	88.1	10000	350	Variabile	Si
49.9	SLE RA 31	0	88.1	10000	350	Variabile	Si
49.9	SLE RA 30	0	88.1	10000	350	Variabile	Si
49.9	SLE RA 29	0	88.1	10000	350	Variabile	Si
49.9	SLE RA 28	0	88.1	10000	350	Variabile	Si

Frecce lungo Y

Ascissa freccia	Combinazione	Freccia	Luce	L/f	L/f,min	Tipo	Verifica
44	SLE RA 1	0	88.1	10000	250	Totale	Si
44	SLE RA 31	0	88.1	10000	250	Totale	Si
44	SLE RA 30	0	88.1	10000	250	Totale	Si
44	SLE RA 29	0	88.1	10000	250	Totale	Si
44	SLE RA 28	0	88.1	10000	250	Totale	Si
82.2	SLE RA 2	0	88.1	10000	350	Variabile	Si
67.5	SLE RA 31	0	88.1	10000	350	Variabile	Si
5.9	SLE RA 30	0	88.1	10000	350	Variabile	Si
67.5	SLE RA 29	0	88.1	10000	350	Variabile	Si
14.7	SLE RA 28	0	88.1	10000	350	Variabile	Si

Superelemento in acciaio composto dall'asta 60

Caratteristiche del materiale

Acciaio: S275, fyk = 2750

Caratteristiche geometriche

Lunghezza: 88.1
Nodo iniziale: 38 Nodo finale: 75
Cerniera iniziale: Svincolo: M2, M3 Cerniera finale: Svincolo: M2, M3
Sovraresistenza: 0% Sisma Z: No

Caratteristiche della sezione

Sezione	Rotazione	Area	Jx	Jy	ix	iy	Wx	Wy	Wplx	Wply
HEA160	0	38.82	1674.7	615.62	6.57	3.98	220.36	76.95	245.43	117.67

Verifiche di resistenza

Verifiche a forza assiale §4.2.4.1.2.1 - §4.2.4.1.2.2 NTC18

X	Comb.	Sfruttamento	Classe	NEd	Nc,Rd	Nt,Rd	Riduzione da taglio	ρx	ρy	Verifica
88.1	SLU 3	0.02		2025.8		101662.9	1	0	0	Si

Verifiche a forza assiale SLD §4.2.4.1.2.1 - §4.2.4.1.2.2 NTC18

X	Comb.	Sfruttamento	Classe	NEd	Nc,Rd	Nt,Rd	Riduzione da taglio	ρx	ρy	Verifica
0	SLD 3	0.005	1	-507.4	101662.9		1	0	0	Si

Verifica a taglio Y §4.2.4.1.2.4 NTC18

X	Comb.	Sfruttamento	VEd	Vc,Rd	Av	Interazione taglio-torsione	Riduzione torsione	Verifica
0	SLU 84	0.001	14.4	20045.7	13.26	Considerata	1	Si

Verifica a torsione §4.2.4.1.2.5 NTC18

X	Comb.	Sfruttamento torsione	TEd	TRd	Riduzione taglio resistente	Sfruttamento taglio-torsione	τEd,totale	τRd	Verifica
47	SLV 5	0.056	826.6	14685.6	Considerata				Si

Verifica a torsione SLD §4.2.4.1.2.5 NTC18

X	Comb.	Sfruttamento torsione	TEd	TRd	Riduzione taglio resistente	Sfruttamento taglio-torsione	τEd,totale	τRd	Verifica
47	SLD 5	0.021	313.5	14685.6	Considerata				Si

Verifica a presso/tenso flessione retta X §§ 4.2.4.1.2.3 - 4.2.4.1.2.6 - 4.2.4.1.2.7 - 4.2.4.1.2.8 NTC18

Verifiche eseguite utilizzando la formula conservativa (6.2) §6.2.1 EN 1993-1-1:2005.

X	Comb.	Sfruttamento	Classe	NEd	NRd	Rid. NRd da VEd	Mx,Ed	Mx,Rd	Rid. Mx,Rd da VEd	Rid. Mx,Rd da NEd	ρx	ρy	Verifica
47	SLU 36	0.02	1	2018.7	101662.9	1	-242	642783	1		0	0	Si

Verifica a presso/tenso flessione retta X SLD §§ 4.2.4.1.2.3 - 4.2.4.1.2.6 - 4.2.4.1.2.7 - 4.2.4.1.2.8 NTC18

Verifiche eseguite utilizzando la formula conservativa (6.2) §6.2.1 EN 1993-1-1:2005.

X	Comb.	Sfruttamento	Classe	NEd	NRd	Rid. NRd da VEd	Mx,Ed	Mx,Rd	Rid. Mx,Rd da VEd	Rid. Mx,Rd da NEd	ρx	ρy	Verifica
41.1	SLD 3	0.005	1	-500.2	101662.9	1	-242	642783	1		0	0	Si

Verifiche ad instabilità

Caratteristiche iniziali

Membratura principale per controllo snellezza; Calcolo di snellezze ed N critici condotti secondo gli assi principali;
Curva X: b; Curva Y: c; Svergolamento: Carico all'estradosso; Curva svergolamento: b;

Dati per instabilità attorno a x

Numero rit.	Presente	Ascissa	Campata	βx/m	Vincolo a entrambi estremi	λx/m	λVer
1	Si	0					
			1-2	1	Si	13.4	Si, (<200)
2	Si	88.1					

Dati per instabilità attorno a y

Numero rit.	Presente	Ascissa	Campata	βy/n	k,LT	kw,LT	Vincolo a entrambi estremi	λy/n	λVer
1	Si	0							
			1-2	1	1	1	Si	22.1	Si, (<200)

Numero rit.	Presente	Ascissa	Campata	βy/n	k,LT	kw,LT	Vincolo a entrambi estremi	λy/n	λVer
2	Si	88.1							

Verifica di stabilità per pressoflessione §C.4.2.4.1.3.3.2 NTC18

X	Comb.	Sfruttamento	Classe	NEd	NRk	Mx,Ed max	Mx,Rk	My,Ed max	My,Rk	χ,x	χ,y	kxx	kxy	kyx	kyy	χ,LT	Verifica
0	SLU 96	0.008	1	-772.9	106746.1	316.2	674922.6	0	323595.1	1	0.972	0.95	0.36	0.855	0.6	1	Si

Verifica di stabilità per pressoflessione SLD §C.4.2.4.1.3.3.2 NTC18

X	Comb.	Sfruttamento	Classe	NEd	NRk	Mx,Ed max	Mx,Rk	My,Ed max	My,Rk	χ,x	χ,y	kxx	kxy	kyx	kyy	χ,LT	Verifica
0	SLD 3	0.005	1	-507.4	106746.1	243.2	674922.6	0	323595.1	1	0.972	0.95	0.36	0.855	0.6	1	Si

Verifica di stabilità a taglio anima Y §4.2.4.1.2.4 [4.2.27] NTC18

η	hw	tw	hw/tw max	Verifica
1.2	13.4	0.6	55.46	Si

Verifica di stabilità a taglio anima Y SLD §4.2.4.1.2.4 [4.2.27] NTC18

η	hw	tw	hw/tw max	Verifica
1.2	13.4	0.6	55.46	Si

Verifiche a deformabilità

Mensola X: No; Mensola Y: No.

Frecce lungo X

Ascissa freccia	Combinazione	Freccia	Luce	L/f	L/f,min	Tipo	Verifica
41.1	SLE RA 1	0	88.1	10000	250	Totale	Si
47	SLE RA 31	0	88.1	10000	250	Totale	Si
47	SLE RA 30	0	88.1	10000	250	Totale	Si
47	SLE RA 29	0	88.1	10000	250	Totale	Si
47	SLE RA 28	0	88.1	10000	250	Totale	Si
11.7	SLE RA 2	0	88.1	10000	350	Variabile	Si
55.8	SLE RA 31	0	88.1	10000	350	Variabile	Si
55.8	SLE RA 30	0	88.1	10000	350	Variabile	Si
55.8	SLE RA 29	0	88.1	10000	350	Variabile	Si
55.8	SLE RA 28	0	88.1	10000	350	Variabile	Si

Frecce lungo Y

Ascissa freccia	Combinazione	Freccia	Luce	L/f	L/f,min	Tipo	Verifica
44	SLE RA 1	0	88.1	10000	250	Totale	Si
44	SLE RA 31	0	88.1	10000	250	Totale	Si
44	SLE RA 30	0	88.1	10000	250	Totale	Si
44	SLE RA 29	0	88.1	10000	250	Totale	Si
44	SLE RA 28	0	88.1	10000	250	Totale	Si
82.2	SLE RA 2	0	88.1	10000	350	Variabile	Si
82.2	SLE RA 31	0	88.1	10000	350	Variabile	Si
70.5	SLE RA 30	0	88.1	10000	350	Variabile	Si
82.2	SLE RA 29	0	88.1	10000	350	Variabile	Si
70.5	SLE RA 28	0	88.1	10000	350	Variabile	Si

Superelemento in acciaio composto dall'asta 61

Caratteristiche del materiale

Acciaio: S275, fyk = 2750

Caratteristiche geometriche

Lunghezza: 108.7
Nodo iniziale: 10 Nodo finale: 41
Cerniera iniziale: No Cerniera finale: No
Sovraresistenza: 0% Sisma Z: No

Caratteristiche della sezione

Sezione	Rotazione	Area	Jx	Jy	ix	iy	Wx	Wy	Wplx	Wply
HEA240	0	76.92	7771.3	2768.96	10.05	6	675.77	230.75	745.47	351.79

Verifiche di resistenza

Verifiche a forza assiale §4.2.4.1.2.1 - §4.2.4.1.2.2 NTC18

X	Comb.	Sfruttamento	Classe	NEd	Nc,Rd	Nt,Rd	Riduzione da taglio	ρx	ρy	Verifica
0	SLU 84	0.241	1	-48581.5	201468.8		1	0	0	Si

Verifiche a forza assiale SLD §4.2.4.1.2.1 - §4.2.4.1.2.2 NTC18

X	Comb.	Sfruttamento	Classe	NEd	Nc,Rd	Nt,Rd	Riduzione da taglio	ρx	ρy	Verifica
0	SLD 13	0.079	1	-15873.2	201468.8		1	0	0	Si

Verifica a taglio X §4.2.4.1.2.4 NTC18

X	Comb.	Sfruttamento	VEd	Vc,Rd	Av	Interazione taglio-torsione	Riduzione torsione	Verifica
0	SLV 11	0.004	-340.8	91525.8	61.47	Considerata	0.98	Si

Verifica a taglio X SLD §4.2.4.1.2.4 NTC18

X	Comb.	Sfruttamento	VEd	Vc,Rd	Av	Interazione taglio-torsione	Riduzione torsione	Verifica
0	SLD 12	0.001	-129.2	92416.3	61.47	Considerata	0.99	Si

Verifica a taglio Y §4.2.4.1.2.4 NTC18

X	Comb.	Sfruttamento	VEd	Vc,Rd	Av	Interazione taglio-torsione	Riduzione torsione	Verifica
108.7	SLU 84	0.137	-5218	38202.6	25.26	Considerata	1	Si

Verifica a taglio Y SLD §4.2.4.1.2.4 NTC18

X	Comb.	Sfruttamento	VEd	Vc,Rd	Av	Interazione taglio-torsione	Riduzione torsione	Verifica
108.7	SLD 4	0.05	-1889.4	38136.1	25.26	Considerata	1	Si

Verifica a torsione §4.2.4.1.2.5 NTC18

X	Comb.	Sfruttamento torsione	TEd	TRd	Riduzione taglio resistente	Sfruttamento taglio-torsione	τEd,totale	τRd	Verifica
108.7	SLV 8	0.038	1469.1	38489.3	Considerata				Si

Verifica a torsione SLD §4.2.4.1.2.5 NTC18

X	Comb.	Sfruttamento torsione	TEd	TRd	Riduzione taglio resistente	Sfruttamento taglio-torsione	τEd,totale	τRd	Verifica
108.7	SLD 8	0.014	557	38489.3	Considerata				Si

Verifica a presso/tenso flessione retta X §§ 4.2.4.1.2.3 - 4.2.4.1.2.6 - 4.2.4.1.2.7 - 4.2.4.1.2.8 NTC18

Verifiche eseguite utilizzando la formula conservativa (6.2) §6.2.1 EN 1993-1-1:2005.

X	Comb.	Sfruttamento	Classe	NEd	NRd	Rid. NRd da VEd	Mx,Ed	Mx,Rd	Rid. Mx,Rd da VEd	Rid. Mx,Rd da NEd	ρx	ρy	Verifica
108.7	SLU 118	0.404	1	-40998.1	201468.8	1	391806	1952423	1		0	0	Si

Verifica a presso/tenso flessione retta X SLD §§ 4.2.4.1.2.3 - 4.2.4.1.2.6 - 4.2.4.1.2.7 - 4.2.4.1.2.8 NTC18

Verifiche eseguite utilizzando la formula conservativa (6.2) §6.2.1 EN 1993-1-1:2005.

X	Comb.	Sfruttamento	Classe	NEd	NRd	Rid. NRd da VEd	Mx,Ed	Mx,Rd	Rid. Mx,Rd da VEd	Rid. Mx,Rd da NEd	ρx	ρy	Verifica
7.2	SLD 14	0.08	1	-15484.4	201468.8	1	-5191	1952423	1		0	0	Si

Verifica a presso/tenso flessione retta Y §§ 4.2.4.1.2.3 - 4.2.4.1.2.6 - 4.2.4.1.2.7 - 4.2.4.1.2.8 NTC18

Verifiche eseguite utilizzando la formula conservativa (6.2) §6.2.1 EN 1993-1-1:2005.

X	Comb.	Sfruttamento	Classe	NEd	NRd	Rid. NRd da VEd	My,Ed	My,Rd	Rid. My,Rd da VEd	Rid. My,Rd da NEd	ρx	ρy	Verifica
54.3	SLV 8	0.082	1	-12761.3	201468.8	1	-17341	921364	1		0	0	Si

Verifica a presso/tenso flessione retta Y SLD §§ 4.2.4.1.2.3 - 4.2.4.1.2.6 - 4.2.4.1.2.7 - 4.2.4.1.2.8 NTC18

Verifiche eseguite utilizzando la formula conservativa (6.2) §6.2.1 EN 1993-1-1:2005.

X	Comb.	Sfruttamento	Classe	NEd	NRd	Rid. NRd da VEd	My,Ed	My,Rd	Rid. My,Rd da VEd	Rid. My,Rd da NEd	ρx	ρy	Verifica
0	SLD 11	0.079	1	-15790.2	201468.8	1	445	921364	1		0	0	Si

Verifica a presso/tenso flessione deviata §§ 4.2.4.1.2.3 - 4.2.4.1.2.6 - 4.2.4.1.2.7 - 4.2.4.1.2.8 NTC18

Verifiche eseguite utilizzando la formula conservativa (6.2) §6.2.1 EN 1993-1-1:2005.

X	Comb.	Sfruttamento	Classe	NEd	NRd	Rid. NRd da VEd	Mx,Ed	Mx,Rd	My,Ed	My,Rd	Rid. Mx,Rd da VEd	Rid. Mx,Rd da NEd	Rid. My,Rd da VEd	Rid. My,Rd da NEd	α	β	ρx	ρy	Verifica
108.7	SLV 8	0.122	1	-9844.6	201468.8	1	66578	1952423	-35857	921364	1		1				0	0	Si

Verifica a presso/tenso flessione deviata SLD §§ 4.2.4.1.2.3 - 4.2.4.1.2.6 - 4.2.4.1.2.7 - 4.2.4.1.2.8 NTC18

Verifiche eseguite utilizzando la formula conservativa (6.2) §6.2.1 EN 1993-1-1:2005.

X	Comb.	Sfruttamento	Classe	NEd	NRd	Rid. NRd da VEd	Mx,Ed	Mx,Rd	My,Ed	My,Rd	Rid. Mx,Rd da VEd	Rid. Mx,Rd da NEd	Rid. My,Rd da VEd	Rid. My,Rd da NEd	α	β	ρx	ρy	Verifica
108.7	SLD 8	0.096	1	-9885.7	201468.8	1	62638	1952423	-13597	921364	1		1				0	0	Si

Verifiche ad instabilità

Caratteristiche iniziali

Membratura principale per controllo snellezza; Calcolo di snellezze ed N critici condotti secondo gli assi principali;
Curva X: b; Curva Y: c; Svergolamento: Carico all'estradosso; Curva svergolamento: b;

Dati per instabilità attorno a x

Numero rit.	Presente	Ascissa	Campata	βx/m	Vincolo a entrambi estremi	λx/m	λVer
1	Si	0					
			1-2	1	Si	10.8	Si, (<200)
2	Si	108.7					

Dati per instabilità attorno a y

Numero rit.	Presente	Ascissa	Campata	βy/n	k,LT	kw,LT	Vincolo a entrambi estremi	λy/n	λVer
1	Si	0							
			1-2	1	1	1	Si	18.1	Si, (<200)
2	Si	108.7							

Verifica di stabilità per pressoflessione §C.4.2.4.1.3.3.2 NTC18

X	Comb.	Sfruttamento	Classe	NEd	NRk	Mx,Ed max	Mx,Rk	My,Ed max	My,Rk	χ,x	χ,y	kxx	kxy	kyx	kyy	χ,LT	Verifica
0	SLU 117	0.404	1	-48581.5	211542.2	391805.5	2050044	27.5	967432.2	1	0.996	0.501	0.346	0.809	0.577	1	Si

Verifica di stabilità per pressoflessione SLD §C.4.2.4.1.3.3.2 NTC18

X	Comb.	Sfruttamento	Classe	NEd	NRk	Mx,Ed max	Mx,Rk	My,Ed max	My,Rk	χ,x	χ,y	kxx	kxy	kyx	kyy	χ,LT	Verifica
0	SLD 8	0.113	1	-15719.1	211542.2	62637.8	2050044	13596.7	967432.2	1	0.996	0.398	0.347	0.809	0.578	1	Si

Verifica di stabilità a taglio anima Y §4.2.4.1.2.4 [4.2.27] NTC18

η	hw	tw	hw/tw max	Verifica
1.2	20.6	0.8	55.46	Si

Verifica di stabilità a taglio anima Y SLD §4.2.4.1.2.4 [4.2.27] NTC18

η	hw	tw	hw/tw max	Verifica
1.2	20.6	0.8	55.46	Si

Verifiche a deformabilità

Mensola X: No; Mensola Y: No.

Frecce lungo X

Ascissa freccia	Combinazione	Freccia	Luce	L/f	L/f,min	Tipo	Verifica
61.6	SLE RA 1	0	108.7	10000	250	Totale	Si
61.6	SLE RA 31	0	108.7	10000	250	Totale	Si
61.6	SLE RA 30	0	108.7	10000	250	Totale	Si
61.6	SLE RA 29	0	108.7	10000	250	Totale	Si
61.6	SLE RA 28	0	108.7	10000	250	Totale	Si
61.6	SLE RA 2	0	108.7	10000	350	Variabile	Si
61.6	SLE RA 31	0	108.7	10000	350	Variabile	Si
61.6	SLE RA 30	0	108.7	10000	350	Variabile	Si
61.6	SLE RA 29	0	108.7	10000	350	Variabile	Si
61.6	SLE RA 28	0	108.7	10000	350	Variabile	Si

Frecce lungo Y

Ascissa freccia	Combinazione	Freccia	Luce	L/f	L/f,min	Tipo	Verifica
47.1	SLE RA 1	-0.002	108.7	10000	250	Totale	Si
68.8	SLE RA 31	0.005	108.7	10000	250	Totale	Si
47.1	SLE RA 30	-0.002	108.7	10000	250	Totale	Si
68.8	SLE RA 29	0.005	108.7	10000	250	Totale	Si
47.1	SLE RA 28	-0.002	108.7	10000	250	Totale	Si
61.6	SLE RA 2	0.01	108.7	10000	350	Variabile	Si
61.6	SLE RA 31	0.007	108.7	10000	350	Variabile	Si
61.6	SLE RA 30	0	108.7	10000	350	Variabile	Si
61.6	SLE RA 29	0.007	108.7	10000	350	Variabile	Si
61.6	SLE RA 28	0	108.7	10000	350	Variabile	Si

Superelemento in acciaio composto dall'asta 62

Caratteristiche del materiale

Acciaio: S275, fyk = 2750

Caratteristiche geometriche

Lunghezza: 108.7
Nodo iniziale: 11 Nodo finale: 44
Cerniera iniziale: No Cerniera finale: No
Sovraresistenza: 0% Sisma Z: No

Caratteristiche della sezione

Sezione	Rotazione	Area	Jx	Jy	ix	iy	Wx	Wy	Wplx	Wply
HEA240	0	76.92	7771.3	2768.96	10.05	6	675.77	230.75	745.47	351.79

Verifiche di resistenza

Verifiche a forza assiale §4.2.4.1.2.1 - §4.2.4.1.2.2 NTC18

X	Comb.	Sfruttamento	Classe	NEd	Nc,Rd	Nt,Rd	Riduzione da taglio	ρx	ρy	Verifica
0	SLU 84	0.242	1	-48724.3	201468.8		1	0	0	Si

Verifiche a forza assiale SLD §4.2.4.1.2.1 - §4.2.4.1.2.2 NTC18

X	Comb.	Sfruttamento	Classe	NEd	Nc,Rd	Nt,Rd	Riduzione da taglio	ρx	ρy	Verifica
0	SLD 1	0.079	1	-15873.2	201468.8		1	0	0	Si

Verifica a taglio X §4.2.4.1.2.4 NTC18

X	Comb.	Sfruttamento	VEd	Vc,Rd	Av	Interazione taglio-torsione	Riduzione torsione	Verifica
0	SLV 7	0.004	340.8	91525.8	61.47	Considerata	0.98	Si

Verifica a taglio X SLD §4.2.4.1.2.4 NTC18

X	Comb.	Sfruttamento	VEd	Vc,Rd	Av	Interazione taglio-torsione	Riduzione torsione	Verifica
36.2	SLD 8	0.001	129.2	92416.3	61.47	Considerata	0.99	Si

Verifica a taglio Y §4.2.4.1.2.4 NTC18

X	Comb.	Sfruttamento	VEd	Vc,Rd	Av	Interazione taglio-torsione	Riduzione torsione	Verifica
108.7	SLU 117	0.137	-5224	38202.6	25.26	Considerata	1	Si

Verifica a taglio Y SLD §4.2.4.1.2.4 NTC18

X	Comb.	Sfruttamento	VEd	Vc,Rd	Av	Interazione taglio-torsione	Riduzione torsione	Verifica
108.7	SLD 16	0.05	-1889.4	38136.1	25.26	Considerata	1	Si

Verifica a torsione §4.2.4.1.2.5 NTC18

X	Comb.	Sfruttamento torsione	TEd	TRd	Riduzione taglio resistente	Sfruttamento taglio-torsione	τEd,totale	τRd	Verifica
50.7	SLV 12	0.038	-1469.1	38489.3	Considerata				Si

Verifica a torsione SLD §4.2.4.1.2.5 NTC18

X	Comb.	Sfruttamento torsione	TEd	TRd	Riduzione taglio resistente	Sfruttamento taglio-torsione	τEd,totale	τRd	Verifica
50.7	SLD 12	0.014	-557	38489.3	Considerata				Si

Verifica a presso/tenso flessione retta X §§ 4.2.4.1.2.3 - 4.2.4.1.2.6 - 4.2.4.1.2.7 - 4.2.4.1.2.8 NTC18

Verifiche eseguite utilizzando la formula conservativa (6.2) §6.2.1 EN 1993-1-1:2005.

X	Comb.	Sfruttamento	Classe	NEd	NRd	Rid. NRd da VEd	Mx,Ed	Mx,Rd	Rid. Mx,Rd da VEd	Rid. Mx,Rd da NEd	ρx	ρy	Verifica
108.7	SLU 85	0.405	1	-41140.9	201468.8	1	392457	1952423	1		0	0	Si

Verifica a presso/tenso flessione retta X SLD §§ 4.2.4.1.2.3 - 4.2.4.1.2.6 - 4.2.4.1.2.7 - 4.2.4.1.2.8 NTC18

Verifiche eseguite utilizzando la formula conservativa (6.2) §6.2.1 EN 1993-1-1:2005.

X	Comb.	Sfruttamento	Classe	NEd	NRd	Rid. NRd da VEd	Mx,Ed	Mx,Rd	Rid. Mx,Rd da VEd	Rid. Mx,Rd da NEd	ρx	ρy	Verifica
7.2	SLD 1	0.08	1	-15484.4	201468.8	1	-5191	1952423	1		0	0	Si

Verifica a presso/tenso flessione retta Y §§ 4.2.4.1.2.3 - 4.2.4.1.2.6 - 4.2.4.1.2.7 - 4.2.4.1.2.8 NTC18

Verifiche eseguite utilizzando la formula conservativa (6.2) §6.2.1 EN 1993-1-1:2005.

X	Comb.	Sfruttamento	Classe	NEd	NRd	Rid. NRd da VEd	My,Ed	My,Rd	Rid. My,Rd da VEd	Rid. My,Rd da NEd	ρx	ρy	Verifica
54.3	SLV 12	0.082	1	-12761.3	201468.8	1	17341	921364	1		0	0	Si

Verifica a presso/tenso flessione retta Y SLD §§ 4.2.4.1.2.3 - 4.2.4.1.2.6 - 4.2.4.1.2.7 - 4.2.4.1.2.8 NTC18

Verifiche eseguite utilizzando la formula conservativa (6.2) §6.2.1 EN 1993-1-1:2005.

X	Comb.	Sfruttamento	Classe	NEd	NRd	Rid. NRd da VEd	My,Ed	My,Rd	Rid. My,Rd da VEd	Rid. My,Rd da NEd	ρx	ρy	Verifica
0	SLD 7	0.079	1	-15790.2	201468.8	1	-445	921364	1		0	0	Si

Verifica a presso/tenso flessione deviata §§ 4.2.4.1.2.3 - 4.2.4.1.2.6 - 4.2.4.1.2.7 - 4.2.4.1.2.8 NTC18

Verifiche eseguite utilizzando la formula conservativa (6.2) §6.2.1 EN 1993-1-1:2005.

X	Comb.	Sfruttamento	Classe	NEd	NRd	Rid. NRd da VEd	Mx,Ed	Mx,Rd	My,Ed	My,Rd	Rid. Mx,Rd da VEd	Rid. Mx,Rd da NEd	Rid. My,Rd da VEd	Rid. My,Rd da NEd	α	β	ρx	ρy	Verifica
108.7	SLV 12	0.122	1	-9844.6	201468.8	1	66578	1952423	35857	921364	1		1				0	0	Si

Verifica a presso/tenso flessione deviata SLD §§ 4.2.4.1.2.3 - 4.2.4.1.2.6 - 4.2.4.1.2.7 - 4.2.4.1.2.8 NTC18

Verifiche eseguite utilizzando la formula conservativa (6.2) §6.2.1 EN 1993-1-1:2005.

X	Comb.	Sfruttamento	Classe	NEd	NRd	Rid. NRd da VEd	Mx,Ed	Mx,Rd	My,Ed	My,Rd	Rid. Mx,Rd da VEd	Rid. Mx,Rd da NEd	Rid. My,Rd da VEd	Rid. My,Rd da NEd	α	β	ρx	ρy	Verifica
108.7	SLD 11	0.096	1	-9885.7	201468.8	1	62638	1952423	13597	921364	1		1				0	0	Si

Verifiche ad instabilità

Caratteristiche iniziali

Membratura principale per controllo snellezza; Calcolo di snellezze ed N critici condotti secondo gli assi principali;
Curva X: b; Curva Y: c; Svergolamento: Carico all'estradosso; Curva svergolamento: b;

Dati per instabilità attorno a x

Numero rit.	Presente	Ascissa	Campata	βx/m	Vincolo a entrambi estremi	λx/m	λVer
1	Si	0					
			1-2	1	Si	10.8	Si, (<200)
2	Si	108.7					

Dati per instabilità attorno a y

Numero rit.	Presente	Ascissa	Campata	βy/n	k,LT	kw,LT	Vincolo a entrambi estremi	λy/n	λVer
1	Si	0							
			1-2	1	1	1	Si	18.1	Si, (<200)
2	Si	108.7							

Verifica di stabilità per pressoflessione §C.4.2.4.1.3.3.2 NTC18

X	Comb.	Sfruttamento	Classe	NEd	NRk	Mx,Ed max	Mx,Rk	My,Ed max	My,Rk	χ,x	χ,y	kxx	kxy	kyx	kyy	χ,LT	Verifica
0	SLU 84	0.405	1	-48724.3	211542.2	392456.6	2050044	27.6	967432.2	1	0.996	0.501	0.346	0.809	0.577	1	Si

Verifica di stabilità per pressoflessione SLD §C.4.2.4.1.3.3.2 NTC18

X	Comb.	Sfruttamento	Classe	NEd	NRk	Mx,Ed max	Mx,Rk	My,Ed max	My,Rk	χ,x	χ,y	kxx	kxy	kyx	kyy	χ,LT	Verifica
0	SLD 12	0.113	1	-15719.1	211542.2	62637.8	2050044	13596.7	967432.2	1	0.996	0.398	0.347	0.809	0.578	1	Si

Verifica di stabilità a taglio anima Y §4.2.4.1.2.4 [4.2.27] NTC18

η	hw	tw	hw/tw max	Verifica
1.2	20.6	0.8	55.46	Si

Verifica di stabilità a taglio anima Y SLD §4.2.4.1.2.4 [4.2.27] NTC18

η	hw	tw	hw/tw max	Verifica
1.2	20.6	0.8	55.46	Si

Verifiche a deformabilità

Mensola X: No; Mensola Y: No.

Frecce lungo X

Ascissa freccia	Combinazione	Freccia	Luce	L/f	L/f,min	Tipo	Verifica
61.6	SLE RA 1	0	108.7	10000	250	Totale	Si
61.6	SLE RA 31	0	108.7	10000	250	Totale	Si
61.6	SLE RA 30	0	108.7	10000	250	Totale	Si
61.6	SLE RA 29	0	108.7	10000	250	Totale	Si
61.6	SLE RA 28	0	108.7	10000	250	Totale	Si

Ascissa freccia	Combinazione	Freccia	Luce	L/f	L/f,min	Tipo	Verifica
61.6	SLE RA 2	0	108.7	10000	350	Variabile	Si
61.6	SLE RA 31	0	108.7	10000	350	Variabile	Si
61.6	SLE RA 30	0	108.7	10000	350	Variabile	Si
61.6	SLE RA 29	0	108.7	10000	350	Variabile	Si
61.6	SLE RA 28	0	108.7	10000	350	Variabile	Si

Frecce lungo Y

Ascissa freccia	Combinazione	Freccia	Luce	L/f	L/f,min	Tipo	Verifica
47.1	SLE RA 1	-0.002	108.7	10000	250	Totale	Si
68.8	SLE RA 31	0.005	108.7	10000	250	Totale	Si
43.5	SLE RA 30	-0.002	108.7	10000	250	Totale	Si
68.8	SLE RA 29	0.005	108.7	10000	250	Totale	Si
47.1	SLE RA 28	-0.002	108.7	10000	250	Totale	Si
61.6	SLE RA 2	0.01	108.7	10000	350	Variabile	Si
61.6	SLE RA 31	0.007	108.7	10000	350	Variabile	Si
61.6	SLE RA 30	0	108.7	10000	350	Variabile	Si
61.6	SLE RA 29	0.007	108.7	10000	350	Variabile	Si
61.6	SLE RA 28	0	108.7	10000	350	Variabile	Si

Superelemento in acciaio composto dall'asta 63

Caratteristiche del materiale

Acciaio: S275, fyk = 2750

Caratteristiche geometriche

Lunghezza: 74.7
Nodo iniziale: 41 Nodo finale: 77
Cerniera iniziale: No Cerniera finale: No
Sovraresistenza: 0% Sisma Z: No

Caratteristiche della sezione

Sezione	Rotazione	Area	Jx	Jy	ix	iy	Wx	Wy	Wplx	Wply
HEA240	0	76.92	7771.3	2768.96	10.05	6	675.77	230.75	745.47	351.79

Verifiche di resistenza

Verifiche a forza assiale §4.2.4.1.2.1 - §4.2.4.1.2.2 NTC18

X	Comb.	Sfruttamento	Classe	NEd	Nc,Rd	Nt,Rd	Riduzione da taglio	ρx	ρy	Verifica
0	SLU 118	0.279	1	-56198.8	201468.8		1	0	0	Si

Verifiche a forza assiale SLD §4.2.4.1.2.1 - §4.2.4.1.2.2 NTC18

X	Comb.	Sfruttamento	Classe	NEd	Nc,Rd	Nt,Rd	Riduzione da taglio	ρx	ρy	Verifica
0	SLD 16	0.061	1	-12293.3	201468.8		1	0	0	Si

Verifica a taglio X §4.2.4.1.2.4 NTC18

X	Comb.	Sfruttamento	VEd	Vc,Rd	Av	Interazione taglio-torsione	Riduzione torsione	Verifica
34.9	SLV 12	0.006	461.6	80839.5	61.47	Considerata	0.87	Si

Verifica a taglio X SLD §4.2.4.1.2.4 NTC18

X	Comb.	Sfruttamento	VEd	Vc,Rd	Av	Interazione taglio-torsione	Riduzione torsione	Verifica
74.7	SLD 12	0.002	175.1	88556.6	61.47	Considerata	0.95	Si

Verifica a taglio Y §4.2.4.1.2.4 NTC18

X	Comb.	Sfruttamento	VEd	Vc,Rd	Av	Interazione taglio-torsione	Riduzione torsione	Verifica
74.7	SLU 69	0.063	-2395	38202.6	25.26	Considerata	1	Si

Verifica a taglio Y SLD §4.2.4.1.2.4 NTC18

X	Comb.	Sfruttamento	VEd	Vc,Rd	Av	Interazione taglio-torsione	Riduzione torsione	Verifica
0	SLD 7	0.048	1729.6	36394.5	25.26	Considerata	0.95	Si

Verifica a torsione §4.2.4.1.2.5 NTC18

X	Comb.	Sfruttamento torsione	TEd	TRd	Riduzione taglio resistente	Sfruttamento taglio-torsione	τEd,totale	τRd	Verifica
34.9	SLV 12	0.305	-11724.9	38489.3	Considerata				Si

Verifica a torsione SLD §4.2.4.1.2.5 NTC18

X	Comb.	Sfruttamento torsione	TEd	TRd	Riduzione taglio resistente	Sfruttamento taglio-torsione	τEd,totale	τRd	Verifica
34.9	SLD 12	0.116	-4446.3	38489.3	Considerata				Si

Verifica a presso/tenso flessione retta X §§ 4.2.4.1.2.3 - 4.2.4.1.2.6 - 4.2.4.1.2.7 - 4.2.4.1.2.8 NTC18

Verifiche eseguite utilizzando la formula conservativa (6.2) §6.2.1 EN 1993-1-1:2005.

X	Comb.	Sfruttamento	Classe	NEd	NRd	Rid. NRd da VEd	Mx,Ed	Mx,Rd	Rid. Mx,Rd da VEd	Rid. Mx,Rd da NEd	ρx	ρy	Verifica
0	SLU 84	0.48	1	-56198.8	201468.8	1	391868	1952423	1		0	0	Si

Verifica a presso/tenso flessione retta X SLD §§ 4.2.4.1.2.3 - 4.2.4.1.2.6 - 4.2.4.1.2.7 - 4.2.4.1.2.8 NTC18

Verifiche eseguite utilizzando la formula conservativa (6.2) §6.2.1 EN 1993-1-1:2005.

X	Comb.	Sfruttamento	Classe	NEd	NRd	Rid. NRd da VEd	Mx,Ed	Mx,Rd	Rid. Mx,Rd da VEd	Rid. Mx,Rd da NEd	ρx	ρy	Verifica
72.2	SLD 1	0.074	1	-8991.5	201468.8	1	56990	1952423	1		0	0	Si

Verifica a presso/tenso flessione deviata §§ 4.2.4.1.2.3 - 4.2.4.1.2.6 - 4.2.4.1.2.7 - 4.2.4.1.2.8 NTC18

Verifiche eseguite utilizzando la formula conservativa (6.2) §6.2.1 EN 1993-1-1:2005.

X	Comb.	Sfruttamento	Classe	NEd	NRd	Rid. NRd da VEd	Mx,Ed	Mx,Rd	My,Ed	My,Rd	Rid. Mx,Rd da VEd	Rid. Mx,Rd da NEd	Rid. My,Rd da VEd	Rid. My,Rd da NEd	α	β	ρx	ρy	Verifica
0	SLV 8	0.127	1	-11896.2	201468.8	1	66582	1952423	-31399	921364	1		1				0	0	Si

Verifica a presso/tenso flessione deviata SLD §§ 4.2.4.1.2.3 - 4.2.4.1.2.6 - 4.2.4.1.2.7 - 4.2.4.1.2.8 NTC18

Verifiche eseguite utilizzando la formula conservativa (6.2) §6.2.1 EN 1993-1-1:2005.

X	Comb.	Sfruttamento	Classe	NEd	NRd	Rid. NRd da VEd	Mx,Ed	Mx,Rd	My,Ed	My,Rd	Rid. Mx,Rd da VEd	Rid. Mx,Rd da NEd	Rid. My,Rd da VEd	Rid. My,Rd da NEd	α	β	ρx	ρy	Verifica
0	SLD 7	0.104	1	-11979.8	201468.8	1	62641	1952423	-11906	921364	1		1				0	0	Si

Verifiche ad instabilità

Caratteristiche iniziali

Membratura principale per controllo snellezza; Calcolo di snellezze ed N critici condotti secondo gli assi principali;
Curva X: b; Curva Y: c; Svergolamento: Carico all'estradosso; Curva svergolamento: b;

Dati per instabilità attorno a x

Numero rit.	Presente	Ascissa	Campata	βx/m	Vincolo a entrambi estremi	λx/m	λVer
1	Si	0					
			1-2	1	Si	7.4	Si, (<200)
2	Si	74.7					

Dati per instabilità attorno a y

Numero rit.	Presente	Ascissa	Campata	βy/n	k,LT	kw,LT	Vincolo a entrambi estremi	λy/n	λVer
1	Si	0							
			1-2	1	1	1	Si	12.5	Si, (<200)
2	Si	74.7							

Verifica di stabilità per pressoflessione §C.4.2.4.1.3.3.2 NTC18

X	Comb.	Sfruttamento	Classe	NEd	NRk	Mx,Ed max	Mx,Rk	My,Ed max	My,Rk	χ,x	χ,y	kxx	kxy	kyx	kyy	χ,LT	Verifica
0	SLU 85	0.463	1	-56198.8	211542.2	411343.6	2050044	30.3	967432.2	1	1	0.876	0.33	0.743	0.551	1	Si

Verifica di stabilità per pressoflessione SLD §C.4.2.4.1.3.3.2 NTC18

X	Comb.	Sfruttamento	Classe	NEd	NRk	Mx,Ed max	Mx,Rk	My,Ed max	My,Rk	χ,x	χ,y	kxx	kxy	kyx	kyy	χ,LT	Verifica
0	SLD 5	0.09	1	-11979.8	211542.2	62640.9	2050044	11901.5	967432.2	1	1	0.557	0.33	0.743	0.55	1	Si

Verifica di stabilità a taglio anima Y §4.2.4.1.2.4 [4.2.27] NTC18

η	hw	tw	hw/tw max	Verifica
1.2	20.6	0.8	55.46	Si

Verifica di stabilità a taglio anima Y SLD §4.2.4.1.2.4 [4.2.27] NTC18

η	hw	tw	hw/tw max	Verifica
1.2	20.6	0.8	55.46	Si

Verifiche a deformabilità

Mensola X: No; Mensola Y: No.

Frecce lungo X

Ascissa freccia	Combinazione	Freccia	Luce	L/f	L/f,min	Tipo	Verifica
54.8	SLE RA 1	0	74.7	10000	250	Totale	Si
27.4	SLE RA 31	0	74.7	10000	250	Totale	Si
49.8	SLE RA 30	0	74.7	10000	250	Totale	Si
27.4	SLE RA 29	0	74.7	10000	250	Totale	Si
49.8	SLE RA 28	0	74.7	10000	250	Totale	Si
32.4	SLE RA 2	0	74.7	10000	350	Variabile	Si
24.9	SLE RA 31	0	74.7	10000	350	Variabile	Si
52.3	SLE RA 30	0	74.7	10000	350	Variabile	Si
24.9	SLE RA 29	0	74.7	10000	350	Variabile	Si
52.3	SLE RA 28	0	74.7	10000	350	Variabile	Si

Frecce lungo Y

Ascissa freccia	Combinazione	Freccia	Luce	L/f	L/f,min	Tipo	Verifica
37.4	SLE RA 18	0.008	74.7	8897.7	250	Totale	Si
37.4	SLE RA 19	0.008	74.7	8897.7	250	Totale	Si
37.4	SLE RA 6	0.008	74.7	8914.5	250	Totale	Si
37.4	SLE RA 7	0.008	74.7	8914.5	250	Totale	Si
37.4	SLE RA 14	0.008	74.7	8979.3	250	Totale	Si
37.4	SLE RA 18	0.009	74.7	7956.3	350	Variabile	Si
37.4	SLE RA 19	0.009	74.7	7956.3	350	Variabile	Si
37.4	SLE RA 6	0.009	74.7	7969.8	350	Variabile	Si
37.4	SLE RA 7	0.009	74.7	7969.8	350	Variabile	Si
37.4	SLE RA 14	0.009	74.7	8021.5	350	Variabile	Si

Superelemento in acciaio composto dall'asta 64

Caratteristiche del materiale

Acciaio: S275, fyk = 2750

Caratteristiche geometriche

Lunghezza: 74.7
Nodo iniziale: 44 Nodo finale: 78
Cerniera iniziale: No Cerniera finale: No
Sovraresistenza: 0% Sisma Z: No

Caratteristiche della sezione

Sezione	Rotazione	Area	Jx	Jy	ix	iy	Wx	Wy	Wplx	Wply
HEA240	0	76.92	7771.3	2768.96	10.05	6	675.77	230.75	745.47	351.79

Verifiche di resistenza

Verifiche a forza assiale §4.2.4.1.2.1 - §4.2.4.1.2.2 NTC18

X	Comb.	Sfruttamento	Classe	NEd	Nc,Rd	Nt,Rd	Riduzione da taglio	ρx	ρy	Verifica
0	SLU 85	0.28	1	-56445.9	201468.8		1	0	0	Si

Verifiche a forza assiale SLD §4.2.4.1.2.1 - §4.2.4.1.2.2 NTC18

X	Comb.	Sfruttamento	Classe	NEd	Nc,Rd	Nt,Rd	Riduzione da taglio	ρx	ρy	Verifica
0	SLD 4	0.061	1	-12293.3	201468.8		1	0	0	Si

Verifica a taglio X §4.2.4.1.2.4 NTC18

X	Comb.	Sfruttamento	VEd	Vc,Rd	Av	Interazione taglio-torsione	Riduzione torsione	Verifica
74.7	SLV 8	0.006	-461.6	80839.5	61.47	Considerata	0.87	Si

Verifica a taglio X SLD §4.2.4.1.2.4 NTC18

X	Comb.	Sfruttamento	VEd	Vc,Rd	Av	Interazione taglio-torsione	Riduzione torsione	Verifica
74.7	SLD 8	0.002	-175.1	88556.6	61.47	Considerata	0.95	Si

Verifica a taglio Y §4.2.4.1.2.4 NTC18

X	Comb.	Sfruttamento	VEd	Vc,Rd	Av	Interazione taglio-torsione	Riduzione torsione	Verifica
74.7	SLU 118	0.063	-2398.2	38202.6	25.26	Considerata	1	Si

Verifica a taglio Y SLD §4.2.4.1.2.4 NTC18

X	Comb.	Sfruttamento	VEd	Vc,Rd	Av	Interazione taglio-torsione	Riduzione torsione	Verifica
0	SLD 12	0.048	1729.6	36394.5	25.26	Considerata	0.95	Si

Verifica a torsione §4.2.4.1.2.5 NTC18

X	Comb.	Sfruttamento torsione	TEd	TRd	Riduzione taglio resistente	Sfruttamento taglio-torsione	τEd,totale	τRd	Verifica
74.7	SLV 8	0.305	11724.9	38489.3	Considerata				Si

Verifica a torsione SLD §4.2.4.1.2.5 NTC18

X	Comb.	Sfruttamento torsione	TEd	TRd	Riduzione taglio resistente	Sfruttamento taglio-torsione	τEd,totale	τRd	Verifica
74.7	SLD 8	0.116	4446.3	38489.3	Considerata				Si

Verifica a presso/tenso flessione retta X §§ 4.2.4.1.2.3 - 4.2.4.1.2.6 - 4.2.4.1.2.7 - 4.2.4.1.2.8 NTC18

Verifiche eseguite utilizzando la formula conservativa (6.2) §6.2.1 EN 1993-1-1:2005.

X	Comb.	Sfruttamento	Classe	NEd	NRd	Rid. NRd da VEd	Mx,Ed	Mx,Rd	Rid. Mx,Rd da VEd	Rid. Mx,Rd da NEd	ρx	ρy	Verifica
0	SLU 117	0.481	1	-56445.9	201468.8	1	392520	1952423	1		0	0	Si

Verifica a presso/tenso flessione retta X SLD §§ 4.2.4.1.2.3 - 4.2.4.1.2.6 - 4.2.4.1.2.7 - 4.2.4.1.2.8 NTC18

Verifiche eseguite utilizzando la formula conservativa (6.2) §6.2.1 EN 1993-1-1:2005.

X	Comb.	Sfruttamento	Classe	NEd	NRd	Rid. NRd da VEd	Mx,Ed	Mx,Rd	Rid. Mx,Rd da VEd	Rid. Mx,Rd da NEd	ρx	ρy	Verifica
72.2	SLD 13	0.074	1	-8991.5	201468.8	1	56990	1952423	1		0	0	Si

Verifica a presso/tenso flessione deviata §§ 4.2.4.1.2.3 - 4.2.4.1.2.6 - 4.2.4.1.2.7 - 4.2.4.1.2.8 NTC18

Verifiche eseguite utilizzando la formula conservativa (6.2) §6.2.1 EN 1993-1-1:2005.

X	Comb.	Sfruttamento	Classe	NEd	NRd	Rid. NRd da VEd	Mx,Ed	Mx,Rd	My,Ed	My,Rd	Rid. Mx,Rd da VEd	Rid. Mx,Rd da NEd	Rid. My,Rd da VEd	Rid. My,Rd da NEd	α	β	ρx	ρy	Verifica
0	SLV 11	0.127	1	-11896.2	201468.8	1	66582	1952423	31399	921364	1		1				0	0	Si

Verifica a presso/tenso flessione deviata SLD §§ 4.2.4.1.2.3 - 4.2.4.1.2.6 - 4.2.4.1.2.7 - 4.2.4.1.2.8 NTC18

Verifiche eseguite utilizzando la formula conservativa (6.2) §6.2.1 EN 1993-1-1:2005.

X	Comb.	Sfruttamento	Classe	NEd	NRd	Rid. NRd da VEd	Mx,Ed	Mx,Rd	My,Ed	My,Rd	Rid. Mx,Rd da VEd	Rid. Mx,Rd da NEd	Rid. My,Rd da VEd	Rid. My,Rd da NEd	α	β	ρx	ρy	Verifica
0	SLD 12	0.104	1	-11979.8	201468.8	1	62641	1952423	11906	921364	1		1				0	0	Si

Verifiche ad instabilità

Caratteristiche iniziali

Membratura principale per controllo snellezza; Calcolo di snellezze ed N critici condotti secondo gli assi principali;
Curva X: b; Curva Y: c; Svergolamento: Carico all'estradosso; Curva svergolamento: b;

Dati per instabilità attorno a x

Numero rit.	Presente	Ascissa	Campata	βx/m	Vincolo a entrambi estremi	λx/m	λVer
1	Si	0					
			1-2	1	Si	7.4	Si, (<200)
2	Si	74.7					

Dati per instabilità attorno a y

Numero rit.	Presente	Ascissa	Campata	βy/n	k,LT	kw,LT	Vincolo a entrambi estremi	λy/n	λVer
1	Si	0							
			1-2	1	1	1	Si	12.5	Si, (<200)
2	Si	74.7							

Verifica di stabilità per pressoflessione §C.4.2.4.1.3.3.2 NTC18

X	Comb.	Sfruttamento	Classe	NEd	NRk	Mx,Ed max	Mx,Rk	My,Ed max	My,Rk	χ,x	χ,y	kxx	kxy	kyx	kyy	χ,LT	Verifica
0	SLU 85	0.466	1	-56445.9	211542.2	414467.8	2050044	30.4	967432.2	1	1	0.874	0.33	0.743	0.55	1	Si

Verifica di stabilità per pressoflessione SLD §C.4.2.4.1.3.3.2 NTC18

X	Comb.	Sfruttamento	Classe	NEd	NRk	Mx,Ed max	Mx,Rk	My,Ed max	My,Rk	χ,x	χ,y	kxx	kxy	kyx	kyy	χ,LT	Verifica
0	SLD 10	0.09	1	-11979.8	211542.2	62640.9	2050044	11901.5	967432.2	1	1	0.557	0.33	0.743	0.55	1	Si

Verifica di stabilità a taglio anima Y §4.2.4.1.2.4 [4.2.27] NTC18

η	hw	tw	hw/tw max	Verifica
1.2	20.6	0.8	55.46	Si

Verifica di stabilità a taglio anima Y SLD §4.2.4.1.2.4 [4.2.27] NTC18

η	hw	tw	hw/tw max	Verifica
1.2	20.6	0.8	55.46	Si

Verifiche a deformabilità

Mensola X: No; Mensola Y: No.

Frecce lungo X

Ascissa freccia	Combinazione	Freccia	Luce	L/f	L/f,min	Tipo	Verifica
54.8	SLE RA 1	0	74.7	10000	250	Totale	Si
27.4	SLE RA 31	0	74.7	10000	250	Totale	Si
49.8	SLE RA 30	0	74.7	10000	250	Totale	Si
27.4	SLE RA 29	0	74.7	10000	250	Totale	Si
49.8	SLE RA 28	0	74.7	10000	250	Totale	Si
32.4	SLE RA 2	0	74.7	10000	350	Variabile	Si
24.9	SLE RA 31	0	74.7	10000	350	Variabile	Si
52.3	SLE RA 30	0	74.7	10000	350	Variabile	Si
24.9	SLE RA 29	0	74.7	10000	350	Variabile	Si
52.3	SLE RA 28	0	74.7	10000	350	Variabile	Si

Frecce lungo Y

Ascissa freccia	Combinazione	Freccia	Luce	L/f	L/f,min	Tipo	Verifica
37.4	SLE RA 18	0.008	74.7	8841.1	250	Totale	Si
37.4	SLE RA 19	0.008	74.7	8841.1	250	Totale	Si
37.4	SLE RA 6	0.008	74.7	8893.1	250	Totale	Si
37.4	SLE RA 7	0.008	74.7	8893.1	250	Totale	Si
37.4	SLE RA 14	0.008	74.7	8943.1	250	Totale	Si
37.4	SLE RA 18	0.009	74.7	7911	350	Variabile	Si
37.4	SLE RA 19	0.009	74.7	7911	350	Variabile	Si
37.4	SLE RA 6	0.009	74.7	7952.7	350	Variabile	Si
37.4	SLE RA 7	0.009	74.7	7952.7	350	Variabile	Si
37.4	SLE RA 14	0.009	74.7	7992.6	350	Variabile	Si

Superelemento in acciaio composto dall'asta 65

Caratteristiche del materiale

Acciaio: S275, fyk = 2750

Caratteristiche geometriche

Lunghezza: 78.5
Nodo iniziale: 77 Nodo finale: 99
Cerniera iniziale: No Cerniera finale: No
Sovraresistenza: 0% Sisma Z: No

Caratteristiche della sezione

Sezione	Rotazione	Area	Jx	Jy	ix	iy	Wx	Wy	Wplx	Wply
HEA240	0	76.92	7771.3	2768.96	10.05	6	675.77	230.75	745.47	351.79

Verifiche di resistenza

Verifiche a forza assiale §4.2.4.1.2.1 - §4.2.4.1.2.2 NTC18

X	Comb.	Sfruttamento	Classe	NEd	Nc,Rd	Nt,Rd	Riduzione da taglio	ρx	ρy	Verifica
0	SLU 85	0.26	1	-52306.6	201468.8		1	0	0	Si

Verifiche a forza assiale SLD §4.2.4.1.2.1 - §4.2.4.1.2.2 NTC18

X	Comb.	Sfruttamento	Classe	NEd	Nc,Rd	Nt,Rd	Riduzione da taglio	ρx	ρy	Verifica
0	SLD 15	0.046	1	-9356.4	201468.8		1	0	0	Si

Verifica a taglio X §4.2.4.1.2.4 NTC18

X	Comb.	Sfruttamento	VEd	Vc,Rd	Av	Interazione taglio-torsione	Riduzione torsione	Verifica
44.5	SLV 9	0.004	-344.8	83198.2	61.47	Considerata	0.9	Si

Verifica a taglio X SLD §4.2.4.1.2.4 NTC18

X	Comb.	Sfruttamento	VEd	Vc,Rd	Av	Interazione taglio-torsione	Riduzione torsione	Verifica
0	SLD 9	0.001	-130.7	89381.9	61.47	Considerata	0.96	Si

Verifica a taglio Y §4.2.4.1.2.4 NTC18

X	Comb.	Sfruttamento	VEd	Vc,Rd	Av	Interazione taglio-torsione	Riduzione torsione	Verifica
0	SLU 117	0.294	11231.7	38202.6	25.26	Considerata	1	Si

Verifica a taglio Y SLD §4.2.4.1.2.4 NTC18

X	Comb.	Sfruttamento	VEd	Vc,Rd	Av	Interazione taglio-torsione	Riduzione torsione	Verifica
0	SLD 4	0.053	1996.2	37767.9	25.26	Considerata	0.99	Si

Verifica a torsione §4.2.4.1.2.5 NTC18

X	Comb.	Sfruttamento torsione	TEd	TRd	Riduzione taglio resistente	Sfruttamento taglio-torsione	τEd,totale	τRd	Verifica
78.5	SLV 8	0.249	-9570.7	38489.3	Considerata				Si

Verifica a torsione SLD §4.2.4.1.2.5 NTC18

X	Comb.	Sfruttamento torsione	TEd	TRd	Riduzione taglio resistente	Sfruttamento taglio-torsione	τEd,totale	τRd	Verifica
78.5	SLD 8	0.094	-3628.7	38489.3	Considerata				Si

Verifica a presso/tenso flessione retta X §§ 4.2.4.1.2.3 - 4.2.4.1.2.6 - 4.2.4.1.2.7 - 4.2.4.1.2.8 NTC18

Verifiche eseguite utilizzando la formula conservativa (6.2) §6.2.1 EN 1993-1-1:2005.

X	Comb.	Sfruttamento	Classe	NEd	NRd	Rid. NRd da VEd	Mx,Ed	Mx,Rd	Rid. Mx,Rd da VEd	Rid. Mx,Rd da NEd	ρx	ρy	Verifica
0	SLU 117	0.47	1	-52306.6	201468.8	1	411371	1952423	1		0	0	Si

Verifica a presso/tenso flessione retta Y §§ 4.2.4.1.2.3 - 4.2.4.1.2.6 - 4.2.4.1.2.7 - 4.2.4.1.2.8 NTC18

Verifiche eseguite utilizzando la formula conservativa (6.2) §6.2.1 EN 1993-1-1:2005.

X	Comb.	Sfruttamento	Classe	NEd	NRd	Rid. NRd da VEd	My,Ed	My,Rd	Rid. My,Rd da VEd	Rid. My,Rd da NEd	ρx	ρy	Verifica
34	SLV 11	0.064	1	-8786.6	201468.8	1	19238	921364	1		0	0	Si

Verifica a presso/tenso flessione retta Y SLD §§ 4.2.4.1.2.3 - 4.2.4.1.2.6 - 4.2.4.1.2.7 - 4.2.4.1.2.8 NTC18

Verifiche eseguite utilizzando la formula conservativa (6.2) §6.2.1 EN 1993-1-1:2005.

X	Comb.	Sfruttamento	Classe	NEd	NRd	Rid. NRd da VEd	My,Ed	My,Rd	Rid. My,Rd da VEd	Rid. My,Rd da NEd	ρx	ρy	Verifica
36.6	SLD 11	0.051	1	-8576	201468.8	1	7637	921364	1		0	0	Si

Verifica a presso/tenso flessione deviata §§ 4.2.4.1.2.3 - 4.2.4.1.2.6 - 4.2.4.1.2.7 - 4.2.4.1.2.8 NTC18

Verifiche eseguite utilizzando la formula conservativa (6.2) §6.2.1 EN 1993-1-1:2005.

X	Comb.	Sfruttamento	Classe	NEd	NRd	Rid. NRd da VEd	Mx,Ed	Mx,Rd	My,Ed	My,Rd	Rid. Mx,Rd da VEd	Rid. Mx,Rd da NEd	Rid. My,Rd da VEd	Rid. My,Rd da NEd	α	β	ρx	ρy	Verifica
78.5	SLV 11	0.085	1	-8283.2	201468.8	1	-12468	1952423	34564	921364	1		1				0	0	Si

Verifica a presso/tenso flessione deviata SLD §§ 4.2.4.1.2.3 - 4.2.4.1.2.6 - 4.2.4.1.2.7 - 4.2.4.1.2.8 NTC18

Verifiche eseguite utilizzando la formula conservativa (6.2) §6.2.1 EN 1993-1-1:2005.

X	Comb.	Sfruttamento	Classe	NEd	NRd	Rid. NRd da VEd	Mx,Ed	Mx,Rd	My,Ed	My,Rd	Rid. Mx,Rd da VEd	Rid. Mx,Rd da NEd	Rid. My,Rd da VEd	Rid. My,Rd da NEd	α	β	ρx	ρy	Verifica
0	SLD 7	0.074	1	-8677.1	201468.8	1	54359	1952423	2853	921364	1		1				0	0	Si

Verifiche ad instabilità

Caratteristiche iniziali

Membratura principale per controllo snellezza; Calcolo di snellezze ed N critici condotti secondo gli assi principali;
Curva X: b; Curva Y: c; Svergolamento: Carico all'estradosso; Curva svergolamento: b;

Dati per instabilità attorno a x

Numero rit.	Presente	Ascissa	Campata	βx/m	Vincolo a entrambi estremi	λx/m	λVer
1	Si	0					
			1-2	1	Si	7.8	Si, (<200)
2	Si	78.5					

Dati per instabilità attorno a y

Numero rit.	Presente	Ascissa	Campata	βy/n	k,LT	kw,LT	Vincolo a entrambi estremi	λy/n	λVer
1	Si	0							
			1-2	1	1	1	Si	13.1	Si, (<200)
2	Si	78.5							

Verifica di stabilità per pressoflessione §C.4.2.4.1.3.3.2 NTC18

X	Comb.	Sfruttamento	Classe	NEd	NRk	Mx,Ed max	Mx,Rk	My,Ed max	My,Rk	χ,x	χ,y	kxx	kxy	kyx	kyy	χ,LT	Verifica
0	SLU 85	0.418	1	-52306.6	211542.2	411370.7	2050044	3.1	967432.2	1	1	0.389	0.362	0.751	0.603	1	Si

Verifica di stabilità per pressoflessione SLD §C.4.2.4.1.3.3.2 NTC18

X	Comb.	Sfruttamento	Classe	NEd	NRk	Mx,Ed max	Mx,Rk	My,Ed max	My,Rk	χ,x	χ,y	kxx	kxy	kyx	kyy	χ,LT	Verifica
0	SLD 8	0.074	1	-8677.1	211542.2	54358.7	2050044	13105.2	967432.2	1	1	0.398	0.407	0.751	0.678	1	Si

Verifica di stabilità a taglio anima Y §4.2.4.1.2.4 [4.2.27] NTC18

η	hw	tw	hw/tw max	Verifica
1.2	20.6	0.8	55.46	Si

Verifica di stabilità a taglio anima Y SLD §4.2.4.1.2.4 [4.2.27] NTC18

η	hw	tw	hw/tw max	Verifica
1.2	20.6	0.8	55.46	Si

Verifiche a deformabilità

Mensola X: No; Mensola Y: No.

Frecce lungo X

Ascissa freccia	Combinazione	Freccia	Luce	L/f	L/f,min	Tipo	Verifica
34	SLE RA 1	0	78.5	10000	250	Totale	Si
20.9	SLE RA 31	0	78.5	10000	250	Totale	Si
20.9	SLE RA 30	0	78.5	10000	250	Totale	Si
20.9	SLE RA 29	0	78.5	10000	250	Totale	Si
20.9	SLE RA 28	0	78.5	10000	250	Totale	Si
31.4	SLE RA 2	0	78.5	10000	350	Variabile	Si
28.8	SLE RA 31	0	78.5	10000	350	Variabile	Si
28.8	SLE RA 30	0	78.5	10000	350	Variabile	Si
28.8	SLE RA 29	0	78.5	10000	350	Variabile	Si
28.8	SLE RA 28	0	78.5	10000	350	Variabile	Si

Frecce lungo Y

Ascissa freccia	Combinazione	Freccia	Luce	L/f	L/f,min	Tipo	Verifica
44.5	SLE RA 1	-0.002	78.5	10000	250	Totale	Si
54.9	SLE RA 31	-0.002	78.5	10000	250	Totale	Si
44.5	SLE RA 30	-0.002	78.5	10000	250	Totale	Si
54.9	SLE RA 29	-0.002	78.5	10000	250	Totale	Si
44.5	SLE RA 28	-0.002	78.5	10000	250	Totale	Si
15.7	SLE RA 2	0.001	78.5	10000	350	Variabile	Si
62.8	SLE RA 31	-0.001	78.5	10000	350	Variabile	Si
49.7	SLE RA 30	0	78.5	10000	350	Variabile	Si
62.8	SLE RA 29	-0.001	78.5	10000	350	Variabile	Si
44.5	SLE RA 28	0	78.5	10000	350	Variabile	Si

Superelemento in acciaio composto dall'asta 66

Caratteristiche del materiale

Acciaio: S275, fyk = 2750

Caratteristiche geometriche

Lunghezza: 78.5
Nodo iniziale: 78 Nodo finale: 100
Cerniera iniziale: No Cerniera finale: No
Sovraresistenza: 0% Sisma Z: No

Caratteristiche della sezione

Sezione	Rotazione	Area	Jx	Jy	ix	iy	Wx	Wy	Wplx	Wply
HEA240	0	76.92	7771.3	2768.96	10.05	6	675.77	230.75	745.47	351.79

Verifiche di resistenza

Verifiche a forza assiale §4.2.4.1.2.1 - §4.2.4.1.2.2 NTC18

X	Comb.	Sfruttamento	Classe	NEd	Nc,Rd	Nt,Rd	Riduzione da taglio	ρx	ρy	Verifica
0	SLU 85	0.261	1	-52510.6	201468.8		1	0	0	Si

Verifiche a forza assiale SLD §4.2.4.1.2.1 - §4.2.4.1.2.2 NTC18

X	Comb.	Sfruttamento	Classe	NEd	Nc,Rd	Nt,Rd	Riduzione da taglio	ρx	ρy	Verifica
0	SLD 4	0.046	1	-9356.4	201468.8		1	0	0	Si

Verifica a taglio X §4.2.4.1.2.4 NTC18

X	Comb.	Sfruttamento	VEd	Vc,Rd	Av	Interazione taglio-torsione	Riduzione torsione	Verifica
47.1	SLV 5	0.004	344.8	83198.2	61.47	Considerata	0.9	Si

Verifica a taglio X SLD §4.2.4.1.2.4 NTC18

X	Comb.	Sfruttamento	VEd	Vc,Rd	Av	Interazione taglio-torsione	Riduzione torsione	Verifica
0	SLD 5	0.001	130.7	89381.9	61.47	Considerata	0.96	Si

Verifica a taglio Y §4.2.4.1.2.4 NTC18

X	Comb.	Sfruttamento	VEd	Vc,Rd	Av	Interazione taglio-torsione	Riduzione torsione	Verifica
0	SLU 117	0.297	11344.9	38202.6	25.26	Considerata	1	Si

Verifica a taglio Y SLD §4.2.4.1.2.4 NTC18

X	Comb.	Sfruttamento	VEd	Vc,Rd	Av	Interazione taglio-torsione	Riduzione torsione	Verifica
0	SLD 15	0.053	1996.2	37767.9	25.26	Considerata	0.99	Si

Verifica a torsione §4.2.4.1.2.5 NTC18

X	Comb.	Sfruttamento torsione	TEd	TRd	Riduzione taglio resistente	Sfruttamento taglio-torsione	τEd,totale	τRd	Verifica
36.6	SLV 12	0.249	9570.7	38489.3	Considerata				Si

Verifica a torsione SLD §4.2.4.1.2.5 NTC18

X	Comb.	Sfruttamento torsione	TEd	TRd	Riduzione taglio resistente	Sfruttamento taglio-torsione	τEd,totale	τRd	Verifica
36.6	SLD 12	0.094	3628.7	38489.3	Considerata				Si

Verifica a presso/tenso flessione retta X §§ 4.2.4.1.2.3 - 4.2.4.1.2.6 - 4.2.4.1.2.7 - 4.2.4.1.2.8 NTC18

Verifiche eseguite utilizzando la formula conservativa (6.2) §6.2.1 EN 1993-1-1:2005.

X	Comb.	Sfruttamento	Classe	NEd	NRd	Rid. NRd da VEd	Mx,Ed	Mx,Rd	Rid. Mx,Rd da VEd	Rid. Mx,Rd da NEd	ρx	ρy	Verifica
0	SLU 84	0.473	1	-52510.6	201468.8	1	414496	1952423	1		0	0	Si

Verifica a presso/tenso flessione retta Y §§ 4.2.4.1.2.3 - 4.2.4.1.2.6 - 4.2.4.1.2.7 - 4.2.4.1.2.8 NTC18

Verifiche eseguite utilizzando la formula conservativa (6.2) §6.2.1 EN 1993-1-1:2005.

X	Comb.	Sfruttamento	Classe	NEd	NRd	Rid. NRd da VEd	My,Ed	My,Rd	Rid. My,Rd da VEd	Rid. My,Rd da NEd	ρx	ρy	Verifica
34	SLV 7	0.064	1	-8786.6	201468.8	1	-19238	921364	1		0	0	Si

Verifica a presso/tenso flessione retta Y SLD §§ 4.2.4.1.2.3 - 4.2.4.1.2.6 - 4.2.4.1.2.7 - 4.2.4.1.2.8 NTC18

Verifiche eseguite utilizzando la formula conservativa (6.2) §6.2.1 EN 1993-1-1:2005.

X	Comb.	Sfruttamento	Classe	NEd	NRd	Rid. NRd da VEd	My,Ed	My,Rd	Rid. My,Rd da VEd	Rid. My,Rd da NEd	ρx	ρy	Verifica
36.6	SLD 7	0.051	1	-8576	201468.8	1	-7637	921364	1		0	0	Si

Verifica a presso/tenso flessione deviata §§ 4.2.4.1.2.3 - 4.2.4.1.2.6 - 4.2.4.1.2.7 - 4.2.4.1.2.8 NTC18

Verifiche eseguite utilizzando la formula conservativa (6.2) §6.2.1 EN 1993-1-1:2005.

X	Comb.	Sfruttamento	Classe	NEd	NRd	Rid. NRd da VEd	Mx,Ed	Mx,Rd	My,Ed	My,Rd	Rid. Mx,Rd da VEd	Rid. Mx,Rd da NEd	Rid. My,Rd da VEd	Rid. My,Rd da NEd	α	β	ρx	ρy	Verifica
78.5	SLV 8	0.085	1	-8283.2	201468.8	1	-12468	1952423	-34564	921364	1		1				0	0	Si

Verifica a presso/tenso flessione deviata SLD §§ 4.2.4.1.2.3 - 4.2.4.1.2.6 - 4.2.4.1.2.7 - 4.2.4.1.2.8 NTC18

Verifiche eseguite utilizzando la formula conservativa (6.2) §6.2.1 EN 1993-1-1:2005.

X	Comb.	Sfruttamento	Classe	NEd	NRd	Rid. NRd da VEd	Mx,Ed	Mx,Rd	My,Ed	My,Rd	Rid. Mx,Rd da VEd	Rid. Mx,Rd da NEd	Rid. My,Rd da VEd	Rid. My,Rd da NEd	α	β	ρx	ρy	Verifica
0	SLD 11	0.074	1	-8677.1	201468.8	1	54359	1952423	-2853	921364	1		1				0	0	Si

Verifiche ad instabilità

Caratteristiche iniziali

Membratura principale per controllo snellezza; Calcolo di snellezze ed N critici condotti secondo gli assi principali;
Curva X: b; Curva Y: c; Svergolamento: Carico all'estradosso; Curva svergolamento: b;

Dati per instabilità attorno a x

Numero rit.	Presente	Ascissa	Campata	βx/m	Vincolo a entrambi estremi	λx/m	λVer
1	Si	0					
			1-2	1	Si	7.8	Si, (<200)
2	Si	78.5					

Dati per instabilità attorno a y

Numero rit.	Presente	Ascissa	Campata	βy/n	k,LT	kw,LT	Vincolo a entrambi estremi	λy/n	λVer
1	Si	0							
			1-2	1	1	1	Si	13.1	Si, (<200)
2	Si	78.5							

Verifica di stabilità per pressoflessione §C.4.2.4.1.3.3.2 NTC18

X	Comb.	Sfruttamento	Classe	NEd	NRk	Mx,Ed max	Mx,Rk	My,Ed max	My,Rk	χ,x	χ,y	kxx	kxy	kyx	kyy	χ,LT	Verifica
0	SLU 85	0.42	1	-52510.6	211542.2	414496.1	2050044	3.2	967432.2	1	1	0.389	0.359	0.751	0.599	1	Si

Verifica di stabilità per pressoflessione SLD §C.4.2.4.1.3.3.2 NTC18

X	Comb.	Sfruttamento	Classe	NEd	NRk	Mx,Ed max	Mx,Rk	My,Ed max	My,Rk	χ,x	χ,y	kxx	kxy	kyx	kyy	χ,LT	Verifica
0	SLD 11	0.074	1	-8677.1	211542.2	54358.7	2050044	13105.2	967432.2	1	1	0.398	0.407	0.751	0.678	1	Si

Verifica di stabilità a taglio anima Y §4.2.4.1.2.4 [4.2.27] NTC18

η	hw	tw	hw/tw max	Verifica
1.2	20.6	0.8	55.46	Si

Verifica di stabilità a taglio anima Y SLD §4.2.4.1.2.4 [4.2.27] NTC18

η	hw	tw	hw/tw max	Verifica
1.2	20.6	0.8	55.46	Si

Verifiche a deformabilità

Mensola X: No; Mensola Y: No.

Frecce lungo X

Ascissa freccia	Combinazione	Freccia	Luce	L/f	L/f,min	Tipo	Verifica
34	SLE RA 1	0	78.5	10000	250	Totale	Si
20.9	SLE RA 31	0	78.5	10000	250	Totale	Si
20.9	SLE RA 30	0	78.5	10000	250	Totale	Si
20.9	SLE RA 29	0	78.5	10000	250	Totale	Si
20.9	SLE RA 28	0	78.5	10000	250	Totale	Si
31.4	SLE RA 2	0	78.5	10000	350	Variabile	Si
28.8	SLE RA 31	0	78.5	10000	350	Variabile	Si
28.8	SLE RA 30	0	78.5	10000	350	Variabile	Si
28.8	SLE RA 29	0	78.5	10000	350	Variabile	Si
28.8	SLE RA 28	0	78.5	10000	350	Variabile	Si

Frecce lungo Y

Ascissa freccia	Combinazione	Freccia	Luce	L/f	L/f,min	Tipo	Verifica
44.5	SLE RA 1	-0.002	78.5	10000	250	Totale	Si
54.9	SLE RA 31	-0.002	78.5	10000	250	Totale	Si
44.5	SLE RA 30	-0.002	78.5	10000	250	Totale	Si
54.9	SLE RA 29	-0.002	78.5	10000	250	Totale	Si
44.5	SLE RA 28	-0.002	78.5	10000	250	Totale	Si
15.7	SLE RA 2	0.001	78.5	10000	350	Variabile	Si
60.2	SLE RA 31	-0.001	78.5	10000	350	Variabile	Si
52.3	SLE RA 30	0	78.5	10000	350	Variabile	Si
60.2	SLE RA 29	-0.001	78.5	10000	350	Variabile	Si
49.7	SLE RA 28	0	78.5	10000	350	Variabile	Si

Superelemento in acciaio composto dall'asta 67

Caratteristiche del materiale

Acciaio: S275, fyk = 2750

Caratteristiche geometriche

Lunghezza: 170.7
Nodo iniziale: 100 Nodo finale: 117
Cerniera iniziale: No Cerniera finale: No
Sovraresistenza: 0% Sisma Z: No

Caratteristiche della sezione

Sezione	Rotazione	Area	Jx	Jy	ix	iy	Wx	Wy	Wplx	Wply
HEA240	0	76.92	7771.3	2768.96	10.05	6	675.77	230.75	745.47	351.79

Verifiche di resistenza

Verifiche a forza assiale §4.2.4.1.2.1 - §4.2.4.1.2.2 NTC18

X	Comb.	Sfruttamento	Classe	NEd	Nc,Rd	Nt,Rd	Riduzione da taglio	ρx	ρy	Verifica
0	SLU 118	0.221	1	-44520.1	201468.8		1	0	0	Si

Verifiche a forza assiale SLD §4.2.4.1.2.1 - §4.2.4.1.2.2 NTC18

X	Comb.	Sfruttamento	Classe	NEd	Nc,Rd	Nt,Rd	Riduzione da taglio	ρx	ρy	Verifica
0	SLD 4	0.042	1	-8530.5	201468.8		1	0	0	Si

Verifica a taglio X §4.2.4.1.2.4 NTC18

X	Comb.	Sfruttamento	VEd	Vc,Rd	Av	Interazione taglio-torsione	Riduzione torsione	Verifica
0	SLV 10	0.003	297.1	92791.3	61.47	Considerata	1	Si

Verifica a taglio X SLD §4.2.4.1.2.4 NTC18

X	Comb.	Sfruttamento	VEd	Vc,Rd	Av	Interazione taglio-torsione	Riduzione torsione	Verifica
0	SLD 9	0.001	112.7	92893.7	61.47	Considerata	1	Si

Verifica a taglio Y §4.2.4.1.2.4 NTC18

X	Comb.	Sfruttamento	VEd	Vc,Rd	Av	Interazione taglio-torsione	Riduzione torsione	Verifica
170.7	SLU 118	0.16	-6131.1	38202.6	25.26	Considerata	1	Si

Verifica a taglio Y SLD §4.2.4.1.2.4 NTC18

X	Comb.	Sfruttamento	VEd	Vc,Rd	Av	Interazione taglio-torsione	Riduzione torsione	Verifica
170.7	SLD 4	0.081	-3112.3	38202.6	25.26	Considerata	1	Si

Verifica a torsione §4.2.4.1.2.5 NTC18

X	Comb.	Sfruttamento torsione	TEd	TRd	Riduzione taglio resistente	Sfruttamento taglio-torsione	τEd,totale	τRd	Verifica
79.6	SLV 12	0.004	-170.7	38489.3	Considerata				Si

Verifica a torsione SLD §4.2.4.1.2.5 NTC18

X	Comb.	Sfruttamento torsione	TEd	TRd	Riduzione taglio resistente	Sfruttamento taglio-torsione	τEd,totale	τRd	Verifica
170.7	SLD 12	0.002	-64.8	38489.3	Considerata				Si

Verifica a presso/tenso flessione retta X §§ 4.2.4.1.2.3 - 4.2.4.1.2.6 - 4.2.4.1.2.7 - 4.2.4.1.2.8 NTC18

Verifiche eseguite utilizzando la formula conservativa (6.2) §6.2.1 EN 1993-1-1:2005.

X	Comb.	Sfruttamento	Classe	NEd	NRd	Rid. NRd da VEd	Mx,Ed	Mx,Rd	Rid. Mx,Rd da VEd	Rid. Mx,Rd da NEd	ρx	ρy	Verifica
5.7	SLU 85	0.409	1	-44495	201468.8	1	-366989	1952423	1		0	0	Si

Verifica a presso/tenso flessione retta Y §§ 4.2.4.1.2.3 - 4.2.4.1.2.6 - 4.2.4.1.2.7 - 4.2.4.1.2.8 NTC18

Verifiche eseguite utilizzando la formula conservativa (6.2) §6.2.1 EN 1993-1-1:2005.

X	Comb.	Sfruttamento	Classe	NEd	NRd	Rid. NRd da VEd	My,Ed	My,Rd	Rid. My,Rd da VEd	Rid. My,Rd da NEd	ρx	ρy	Verifica
130.9	SLV 13	0.052	1	-5483	201468.8	1	22425	921364	1		0	0	Si

Verifica a presso/tenso flessione deviata §§ 4.2.4.1.2.3 - 4.2.4.1.2.6 - 4.2.4.1.2.7 - 4.2.4.1.2.8 NTC18

Verifiche eseguite utilizzando la formula conservativa (6.2) §6.2.1 EN 1993-1-1:2005.

X	Comb.	Sfruttamento	Classe	NEd	NRd	Rid. NRd da VEd	Mx,Ed	Mx,Rd	My,Ed	My,Rd	Rid. Mx,Rd da VEd	Rid. Mx,Rd da NEd	Rid. My,Rd da VEd	Rid. My,Rd da NEd	α	β	ρx	ρy	Verifica
170.7	SLV 6	0.182	1	-7658.7	201468.8	1	98236	1952423	86568	921364	1		1				0	0	Si

Verifica a presso/tenso flessione deviata SLD §§ 4.2.4.1.2.3 - 4.2.4.1.2.6 - 4.2.4.1.2.7 - 4.2.4.1.2.8 NTC18

Verifiche eseguite utilizzando la formula conservativa (6.2) §6.2.1 EN 1993-1-1:2005.

X	Comb.	Sfruttamento	Classe	NEd	NRd	Rid. NRd da VEd	Mx,Ed	Mx,Rd	My,Ed	My,Rd	Rid. Mx,Rd da VEd	Rid. Mx,Rd da NEd	Rid. My,Rd da VEd	Rid. My,Rd da NEd	α	β	ρx	ρy	Verifica
170.7	SLD 5	0.123	1	-7372.9	201468.8	1	98568	1952423	32827	921364	1		1				0	0	Si

Verifiche ad instabilità

Caratteristiche iniziali

Membratura principale per controllo snellezza; Calcolo di snellezze ed N critici condotti secondo gli assi principali;
Curva X: b; Curva Y: c; Svergolamento: Carico all'estradosso; Curva svergolamento: b;

Dati per instabilità attorno a x

Numero rit.	Presente	Ascissa	Campata	βx/m	Vincolo a entrambi estremi	λx/m	λVer
1	Si	0					
			1-2	1	Si	17	Si, (<200)
2	Si	170.7					

Dati per instabilità attorno a y

Numero rit.	Presente	Ascissa	Campata	βy/n	k,LT	kw,LT	Vincolo a entrambi estremi	λy/n	λVer
1	Si	0							
			1-2	1	1	1	Si	28.4	Si, (<200)
2	Si	170.7							

Verifica di stabilità per pressoflessione §C.4.2.4.1.3.3.2 NTC18

X	Comb.	Sfruttamento	Classe	NEd	NRk	Mx,Ed max	Mx,Rk	My,Ed max	My,Rk	χ,x	χ,y	kxx	kxy	kyx	kyy	χ,LT	Verifica
0	SLU 118	0.411	1	-44520.1	211542.2	366989.5	2050044	9.9	967432.2	1	0.935	0.75	0.286	0.928	0.477	1	Si

Verifica di stabilità per pressoflessione SLD §C.4.2.4.1.3.3.2 NTC18

X	Comb.	Sfruttamento	Classe	NEd	NRk	Mx,Ed max	Mx,Rk	My,Ed max	My,Rk	χ,x	χ,y	kxx	kxy	kyx	kyy	χ,LT	Verifica
0	SLD 5	0.116	1	-7953	211542.2	98568.2	2050044	32827	967432.2	1	0.935	0.614	0.46	0.928	0.767	1	Si

Verifica di stabilità a taglio anima Y §4.2.4.1.2.4 [4.2.27] NTC18

η	hw	tw	hw/tw max	Verifica
1.2	20.6	0.8	55.46	Si

Verifica di stabilità a taglio anima Y SLD §4.2.4.1.2.4 [4.2.27] NTC18

η	hw	tw	hw/tw max	Verifica
1.2	20.6	0.8	55.46	Si

Verifiche a deformabilità

Mensola X: No; Mensola Y: No.

Frecce lungo X

Ascissa freccia	Combinazione	Freccia	Luce	L/f	L/f,min	Tipo	Verifica
102.4	SLE RA 1	0	170.7	10000	250	Totale	Si
119.5	SLE RA 31	0	170.7	10000	250	Totale	Si
119.5	SLE RA 30	0	170.7	10000	250	Totale	Si
119.5	SLE RA 29	0	170.7	10000	250	Totale	Si
119.5	SLE RA 28	0	170.7	10000	250	Totale	Si
102.4	SLE RA 2	0	170.7	10000	350	Variabile	Si
74	SLE RA 31	0	170.7	10000	350	Variabile	Si
74	SLE RA 30	0	170.7	10000	350	Variabile	Si
74	SLE RA 29	0	170.7	10000	350	Variabile	Si
74	SLE RA 28	0	170.7	10000	350	Variabile	Si

Frecce lungo Y

Ascissa freccia	Combinazione	Freccia	Luce	L/f	L/f,min	Tipo	Verifica
74	SLE RA 19	-0.044	170.7	3863.5	250	Totale	Si
74	SLE RA 18	-0.044	170.7	3863.5	250	Totale	Si
74	SLE RA 7	-0.044	170.7	3881.6	250	Totale	Si
74	SLE RA 6	-0.044	170.7	3881.6	250	Totale	Si
74	SLE RA 15	-0.044	170.7	3890.7	250	Totale	Si
74	SLE RA 19	-0.026	170.7	6495.8	350	Variabile	Si
74	SLE RA 18	-0.026	170.7	6495.8	350	Variabile	Si
74	SLE RA 7	-0.026	170.7	6547.1	350	Variabile	Si
74	SLE RA 6	-0.026	170.7	6547.1	350	Variabile	Si
74	SLE RA 15	-0.026	170.7	6573	350	Variabile	Si

Superelemento in acciaio composto dall'asta 68

Caratteristiche del materiale

Acciaio: S275, fyk = 2750

Caratteristiche geometriche

Lunghezza: 170.7
Nodo iniziale: 99 Nodo finale: 117
Cerniera iniziale: No Cerniera finale: No
Sovraresistenza: 0% Sisma Z: No

Caratteristiche della sezione

Sezione	Rotazione	Area	Jx	Jy	ix	iy	Wx	Wy	Wplx	Wply
HEA240	0	76.92	7771.3	2768.96	10.05	6	675.77	230.75	745.47	351.79

Verifiche di resistenza

Verifiche a forza assiale §4.2.4.1.2.1 - §4.2.4.1.2.2 NTC18

X	Comb.	Sfruttamento	Classe	NEd	Nc,Rd	Nt,Rd	Riduzione da taglio	ρx	ρy	Verifica
0	SLU 118	0.22	1	-44378.5	201468.8		1	0	0	Si

Verifiche a forza assiale SLD §4.2.4.1.2.1 - §4.2.4.1.2.2 NTC18

X	Comb.	Sfruttamento	Classe	NEd	Nc,Rd	Nt,Rd	Riduzione da taglio	ρx	ρy	Verifica
0	SLD 15	0.042	1	-8530.5	201468.8		1	0	0	Si

Verifica a taglio X §4.2.4.1.2.4 NTC18

X	Comb.	Sfruttamento	VEd	Vc,Rd	Av	Interazione taglio-torsione	Riduzione torsione	Verifica
0	SLV 5	0.003	-297.1	92791.3	61.47	Considerata	1	Si

Verifica a taglio X SLD §4.2.4.1.2.4 NTC18

X	Comb.	Sfruttamento	VEd	Vc,Rd	Av	Interazione taglio-torsione	Riduzione torsione	Verifica
0	SLD 5	0.001	-112.7	92893.7	61.47	Considerata	1	Si

Verifica a taglio Y §4.2.4.1.2.4 NTC18

X	Comb.	Sfruttamento	VEd	Vc,Rd	Av	Interazione taglio-torsione	Riduzione torsione	Verifica
170.7	SLU 85	0.159	-6091.9	38202.6	25.26	Considerata	1	Si

Verifica a taglio Y SLD §4.2.4.1.2.4 NTC18

X	Comb.	Sfruttamento	VEd	Vc,Rd	Av	Interazione taglio-torsione	Riduzione torsione	Verifica
170.7	SLD 16	0.081	-3112.3	38202.6	25.26	Considerata	1	Si

Verifica a torsione §4.2.4.1.2.5 NTC18

X	Comb.	Sfruttamento torsione	TEd	TRd	Riduzione taglio resistente	Sfruttamento taglio-torsione	τEd,totale	τRd	Verifica
170.7	SLV 8	0.004	170.7	38489.3	Considerata				Si

Verifica a torsione SLD §4.2.4.1.2.5 NTC18

X	Comb.	Sfruttamento torsione	TEd	TRd	Riduzione taglio resistente	Sfruttamento taglio-torsione	τEd,totale	τRd	Verifica
170.7	SLD 8	0.002	64.8	38489.3	Considerata				Si

Verifica a presso/tenso flessione retta X §§ 4.2.4.1.2.3 - 4.2.4.1.2.6 - 4.2.4.1.2.7 - 4.2.4.1.2.8 NTC18

Verifiche eseguite utilizzando la formula conservativa (6.2) §6.2.1 EN 1993-1-1:2005.

X	Comb.	Sfruttamento	Classe	NEd	NRd	Rid. NRd da VEd	Mx,Ed	Mx,Rd	Rid. Mx,Rd da VEd	Rid. Mx,Rd da NEd	ρx	ρy	Verifica
5.7	SLU 85	0.405	1	-44353.3	201468.8	1	-361460	1952423	1		0	0	Si

Verifica a presso/tenso flessione retta Y §§ 4.2.4.1.2.3 - 4.2.4.1.2.6 - 4.2.4.1.2.7 - 4.2.4.1.2.8 NTC18

Verifiche eseguite utilizzando la formula conservativa (6.2) §6.2.1 EN 1993-1-1:2005.

X	Comb.	Sfruttamento	Classe	NEd	NRd	Rid. NRd da VEd	My,Ed	My,Rd	Rid. My,Rd da VEd	Rid. My,Rd da NEd	ρx	ρy	Verifica
130.9	SLV 1	0.052	1	-5483	201468.8	1	-22425	921364	1		0	0	Si

Verifica a presso/tenso flessione deviata §§ 4.2.4.1.2.3 - 4.2.4.1.2.6 - 4.2.4.1.2.7 - 4.2.4.1.2.8 NTC18

Verifiche eseguite utilizzando la formula conservativa (6.2) §6.2.1 EN 1993-1-1:2005.

X	Comb.	Sfruttamento	Classe	NEd	NRd	Rid. NRd da VEd	Mx,Ed	Mx,Rd	My,Ed	My,Rd	Rid. Mx,Rd da VEd	Rid. Mx,Rd da NEd	Rid. My,Rd da VEd	Rid. My,Rd da NEd	α	β	ρx	ρy	Verifica
170.7	SLV 9	0.182	1	-7658.7	201468.8	1	98236	1952423	-86568	921364	1		1				0	0	Si

Verifica a presso/tenso flessione deviata SLD §§ 4.2.4.1.2.3 - 4.2.4.1.2.6 - 4.2.4.1.2.7 - 4.2.4.1.2.8 NTC18

Verifiche eseguite utilizzando la formula conservativa (6.2) §6.2.1 EN 1993-1-1:2005.

X	Comb.	Sfruttamento	Classe	NEd	NRd	Rid. NRd da VEd	Mx,Ed	Mx,Rd	My,Ed	My,Rd	Rid. Mx,Rd da VEd	Rid. Mx,Rd da NEd	Rid. My,Rd da VEd	Rid. My,Rd da NEd	α	β	ρx	ρy	Verifica
170.7	SLD 9	0.123	1	-7372.9	201468.8	1	98568	1952423	-32827	921364	1		1				0	0	Si

Verifiche ad instabilità

Caratteristiche iniziali

Membratura principale per controllo snellezza; Calcolo di snellezze ed N critici condotti secondo gli assi principali;

Curva X: b; Curva Y: c; Svergolamento: Carico all'estradosso; Curva svergolamento: b;

Dati per instabilità attorno a x

Numero rit.	Presente	Ascissa	Campata	βx/m	Vincolo a entrambi estremi	λx/m	λVer
1	Si	0					
			1-2	1	Si	17	Si, (<200)
2	Si	170.7					

Dati per instabilità attorno a y

Numero rit.	Presente	Ascissa	Campata	βy/n	k,LT	kw,LT	Vincolo a entrambi estremi	λy/n	λVer
1	Si	0							
			1-2	1	1	1	Si	28.4	Si, (<200)
2	Si	170.7							

Verifica di stabilità per pressoflessione §C.4.2.4.1.3.3.2 NTC18

X	Comb.	Sfruttamento	Classe	NEd	NRk	Mx,Ed max	Mx,Rk	My,Ed max	My,Rk	χ,x	χ,y	kxx	kxy	kyx	kyy	χ,LT	Verifica
0	SLU 118	0.407	1	-44378.5	211542.2	361460.5	2050044	9.9	967432.2	1	0.935	0.753	0.287	0.928	0.478	1	Si

Verifica di stabilità per pressoflessione SLD §C.4.2.4.1.3.3.2 NTC18

X	Comb.	Sfruttamento	Classe	NEd	NRk	Mx,Ed max	Mx,Rk	My,Ed max	My,Rk	χ,x	χ,y	kxx	kxy	kyx	kyy	χ,LT	Verifica
0	SLD 9	0.116	1	-7953	211542.2	98568.2	2050044	32827	967432.2	1	0.935	0.614	0.46	0.928	0.767	1	Si

Verifica di stabilità a taglio anima Y §4.2.4.1.2.4 [4.2.27] NTC18

η	hw	tw	hw/tw max	Verifica
1.2	20.6	0.8	55.46	Si

Verifica di stabilità a taglio anima Y SLD §4.2.4.1.2.4 [4.2.27] NTC18

η	hw	tw	hw/tw max	Verifica
1.2	20.6	0.8	55.46	Si

Verifiche a deformabilità

Mensola X: No; Mensola Y: No.

Frecce lungo X

Ascissa freccia	Combinazione	Freccia	Luce	L/f	L/f,min	Tipo	Verifica
102.4	SLE RA 1	0	170.7	10000	250	Totale	Si
119.5	SLE RA 31	0	170.7	10000	250	Totale	Si
119.5	SLE RA 30	0	170.7	10000	250	Totale	Si
119.5	SLE RA 29	0	170.7	10000	250	Totale	Si
119.5	SLE RA 28	0	170.7	10000	250	Totale	Si
102.4	SLE RA 2	0	170.7	10000	350	Variabile	Si
74	SLE RA 31	0	170.7	10000	350	Variabile	Si
74	SLE RA 30	0	170.7	10000	350	Variabile	Si
74	SLE RA 29	0	170.7	10000	350	Variabile	Si
74	SLE RA 28	0	170.7	10000	350	Variabile	Si

Frecce lungo Y

Ascissa freccia	Combinazione	Freccia	Luce	L/f	L/f,min	Tipo	Verifica
74	SLE RA 7	-0.044	170.7	3894	250	Totale	Si
74	SLE RA 6	-0.044	170.7	3894	250	Totale	Si
74	SLE RA 19	-0.044	170.7	3896.5	250	Totale	Si
74	SLE RA 18	-0.044	170.7	3896.5	250	Totale	Si
74	SLE RA 3	-0.044	170.7	3909	250	Totale	Si
74	SLE RA 7	-0.026	170.7	6582.5	350	Variabile	Si
74	SLE RA 6	-0.026	170.7	6582.5	350	Variabile	Si
74	SLE RA 19	-0.026	170.7	6589.6	350	Variabile	Si
74	SLE RA 18	-0.026	170.7	6589.6	350	Variabile	Si
74	SLE RA 3	-0.026	170.7	6625.5	350	Variabile	Si

Superelemento in acciaio composto dall'asta 69

Caratteristiche del materiale

Acciaio: S275, fyk = 2750

Caratteristiche geometriche

Lunghezza: 128
Nodo iniziale: 44 Nodo finale: 43
Cerniera iniziale: Svincolo: M2, M3 Cerniera finale: No
Sovraresistenza: 0% Sisma Z: No

Caratteristiche della sezione

Sezione	Rotazione	Area	Jx	Jy	ix	iy	Wx	Wy	Wplx	Wply
HEA160	0	38.82	1674.7	615.62	6.57	3.98	220.36	76.95	245.43	117.67

Verifiche di resistenza

Verifiche a forza assiale §4.2.4.1.2.1 - §4.2.4.1.2.2 NTC18

X	Comb.	Sfruttamento	Classe	NEd	Nc,Rd	Nt,Rd	Riduzione da taglio	ρx	ρy	Verifica
119.5	SLU 85	0.179		18225.2		101662.9	1	0	0	Si

Verifiche a forza assiale SLD §4.2.4.1.2.1 - §4.2.4.1.2.2 NTC18

X	Comb.	Sfruttamento	Classe	NEd	Nc,Rd	Nt,Rd	Riduzione da taglio	ρx	ρy	Verifica
128	SLD 16	0.02		2012.5		101662.9	1	0	0	Si

Verifica a taglio X §4.2.4.1.2.4 NTC18

X	Comb.	Sfruttamento	VEd	Vc,Rd	Av	Interazione taglio-torsione	Riduzione torsione	Verifica
119.5	SLV 5	0.001	-48.4	43042.3	30.78	Considerata	0.92	Si

Verifica a taglio Y §4.2.4.1.2.4 NTC18

X	Comb.	Sfruttamento	VEd	Vc,Rd	Av	Interazione taglio-torsione	Riduzione torsione	Verifica
128	SLU 72	0.012	-244.7	20045.7	13.26	Considerata	1	Si

Verifica a taglio Y SLD §4.2.4.1.2.4 NTC18

X	Comb.	Sfruttamento	VEd	Vc,Rd	Av	Interazione taglio-torsione	Riduzione torsione	Verifica
128	SLD 16	0.003	-57.1	19880.1	13.26	Considerata	0.99	Si

Verifica a torsione §4.2.4.1.2.5 NTC18

X	Comb.	Sfruttamento torsione	TEd	TRd	Riduzione taglio resistente	Sfruttamento taglio-torsione	τEd,totale	τRd	Verifica
59.7	SLV 12	0.181	2654.2	14685.6	Considerata				Si

Verifica a torsione SLD §4.2.4.1.2.5 NTC18

X	Comb.	Sfruttamento torsione	TEd	TRd	Riduzione taglio resistente	Sfruttamento taglio-torsione	τEd,totale	τRd	Verifica
59.7	SLD 12	0.069	1006.4	14685.6	Considerata				Si

Verifica a presso/tenso flessione retta X §§ 4.2.4.1.2.3 - 4.2.4.1.2.6 - 4.2.4.1.2.7 - 4.2.4.1.2.8 NTC18

Verifiche eseguite utilizzando la formula conservativa (6.2) §6.2.1 EN 1993-1-1:2005.

X	Comb.	Sfruttamento	Classe	NEd	NRd	Rid. NRd da VEd	Mx,Ed	Mx,Rd	Rid. Mx,Rd da VEd	Rid. Mx,Rd da NEd	ρx	ρy	Verifica
128	SLU 118	0.223	1	18225.2	101662.9	1	27916	642783	1		0	0	Si

Verifica a presso/tenso flessione retta X SLD §§ 4.2.4.1.2.3 - 4.2.4.1.2.6 - 4.2.4.1.2.7 - 4.2.4.1.2.8 NTC18

Verifiche eseguite utilizzando la formula conservativa (6.2) §6.2.1 EN 1993-1-1:2005.

X	Comb.	Sfruttamento	Classe	NEd	NRd	Rid. NRd da VEd	Mx,Ed	Mx,Rd	Rid. Mx,Rd da VEd	Rid. Mx,Rd da NEd	ρx	ρy	Verifica
12.8	SLD 15	0.02	1	2012.5	101662.9	1	257	642783	1		0	0	Si

Verifica a presso/tenso flessione retta Y §§ 4.2.4.1.2.3 - 4.2.4.1.2.6 - 4.2.4.1.2.7 - 4.2.4.1.2.8 NTC18

Verifiche eseguite utilizzando la formula conservativa (6.2) §6.2.1 EN 1993-1-1:2005.

X	Comb.	Sfruttamento	Classe	NEd	NRd	Rid. NRd da VEd	My,Ed	My,Rd	Rid. My,Rd da VEd	Rid. My,Rd da NEd	ρx	ρy	Verifica
128	SLV 5	0.037	1	1700.5	101662.9	1	-6192	308186	1		0	0	Si

Verifica a presso/tenso flessione retta Y SLD §§ 4.2.4.1.2.3 - 4.2.4.1.2.6 - 4.2.4.1.2.7 - 4.2.4.1.2.8 NTC18

Verifiche eseguite utilizzando la formula conservativa (6.2) §6.2.1 EN 1993-1-1:2005.

X	Comb.	Sfruttamento	Classe	NEd	NRd	Rid. NRd da VEd	My,Ed	My,Rd	Rid. My,Rd da VEd	Rid. My,Rd da NEd	ρx	ρy	Verifica
98.1	SLD 6	0.023	1	1766.1	101662.9	1	-1800	308186	1		0	0	Si

Verifica a presso/tenso flessione deviata §§ 4.2.4.1.2.3 - 4.2.4.1.2.6 - 4.2.4.1.2.7 - 4.2.4.1.2.8 NTC18

Verifiche eseguite utilizzando la formula conservativa (6.2) §6.2.1 EN 1993-1-1:2005.

X	Comb.	Sfruttamento	Classe	NEd	NRd	Rid. NRd da VEd	Mx,Ed	Mx,Rd	My,Ed	My,Rd	Rid. Mx,Rd da VEd	Rid. Mx,Rd da NEd	Rid. My,Rd da VEd	Rid. My,Rd da NEd	α	β	ρx	ρy	Verifica
128	SLV 10	0.045	1	1945.5	101662.9	1	3738	642783	-6192	308186	1		1				0	0	Si

Verifica a presso/tenso flessione deviata SLD §§ 4.2.4.1.2.3 - 4.2.4.1.2.6 - 4.2.4.1.2.7 - 4.2.4.1.2.8 NTC18

Verifiche eseguite utilizzando la formula conservativa (6.2) §6.2.1 EN 1993-1-1:2005.

X	Comb.	Sfruttamento	Classe	NEd	NRd	Rid. NRd da VEd	Mx,Ed	Mx,Rd	My,Ed	My,Rd	Rid. Mx,Rd da VEd	Rid. Mx,Rd da NEd	Rid. My,Rd da VEd	Rid. My,Rd da NEd	α	β	ρx	ρy	Verifica
128	SLD 9	0.03	1	1879.8	101662.9	1	2685	642783	-2348	308186	1		1				0	0	Si

Verifiche ad instabilità

Caratteristiche iniziali

Membratura principale per controllo snellezza; Calcolo di snellezze ed N critici condotti secondo gli assi principali;
Curva X: b; Curva Y: c; Svergolamento: Carico all'estradosso; Curva svergolamento: b;

Dati per instabilità attorno a x

Numero rit.	Presente	Ascissa	Campata	βx/m	Vincolo a entrambi estremi	λx/m	λVer
1	Si	0					
			1-2	1	Si	19.5	Si, (<200)
2	Si	128					

Dati per instabilità attorno a y

Numero rit.	Presente	Ascissa	Campata	βy/n	k,LT	kw,LT	Vincolo a entrambi estremi	λy/n	λVer
1	Si	0							
			1-2	1	1	1	Si	32.1	Si, (<200)
2	Si	128							

Verifica di stabilità a taglio anima Y §4.2.4.1.2.4 [4.2.27] NTC18

η	hw	tw	hw/tw max	Verifica
1.2	13.4	0.6	55.46	Si

Verifica di stabilità a taglio anima Y SLD §4.2.4.1.2.4 [4.2.27] NTC18

η	hw	tw	hw/tw max	Verifica
1.2	13.4	0.6	55.46	Si

Verifiche a deformabilità

Mensola X: No; Mensola Y: No.

Frecce lungo X

Ascissa freccia	Combinazione	Freccia	Luce	L/f	L/f,min	Tipo	Verifica
72.5	SLE RA 1	0	128	10000	250	Totale	Si
72.5	SLE RA 31	0	128	10000	250	Totale	Si
72.5	SLE RA 30	0	128	10000	250	Totale	Si
72.5	SLE RA 29	0	128	10000	250	Totale	Si
72.5	SLE RA 28	0	128	10000	250	Totale	Si
72.5	SLE RA 2	0	128	10000	350	Variabile	Si
72.5	SLE RA 31	0	128	10000	350	Variabile	Si
72.5	SLE RA 30	0	128	10000	350	Variabile	Si
72.5	SLE RA 29	0	128	10000	350	Variabile	Si
72.5	SLE RA 28	0	128	10000	350	Variabile	Si

Frecce lungo Y

Ascissa freccia	Combinazione	Freccia	Luce	L/f	L/f,min	Tipo	Verifica
93.9	SLE RA 1	0	128	10000	250	Totale	Si
76.8	SLE RA 31	0.004	128	10000	250	Totale	Si
98.1	SLE RA 30	0	128	10000	250	Totale	Si
76.8	SLE RA 29	0.004	128	10000	250	Totale	Si
98.1	SLE RA 28	0	128	10000	250	Totale	Si
72.5	SLE RA 2	0.005	128	10000	350	Variabile	Si
72.5	SLE RA 31	0.004	128	10000	350	Variabile	Si
72.5	SLE RA 30	0	128	10000	350	Variabile	Si
72.5	SLE RA 29	0.004	128	10000	350	Variabile	Si
72.5	SLE RA 28	0	128	10000	350	Variabile	Si

Superelemento in acciaio composto dall'asta 70

Caratteristiche del materiale

Acciaio: S275, fyk = 2750

Caratteristiche geometriche

Lunghezza: 339
Nodo iniziale: 43 Nodo finale: 42
Cerniera iniziale: No Cerniera finale: No
Sovraresistenza: 0% Sisma Z: No

Caratteristiche della sezione

Sezione	Rotazione	Area	Jx	Jy	ix	iy	Wx	Wy	Wplx	Wply
HEA160	0	38.82	1674.7	615.62	6.57	3.98	220.36	76.95	245.43	117.67

Verifiche di resistenza

Verifiche a forza assiale §4.2.4.1.2.1 - §4.2.4.1.2.2 NTC18

X	Comb.	Sfruttamento	Classe	NEd	Nc,Rd	Nt,Rd	Riduzione da taglio	ρx	ρy	Verifica
0	SLU 106	0.231		23445.8		101662.9	1	0	0	Si

Verifiche a forza assiale SLD §4.2.4.1.2.1 - §4.2.4.1.2.2 NTC18

X	Comb.	Sfruttamento	Classe	NEd	Nc,Rd	Nt,Rd	Riduzione da taglio	ρx	ρy	Verifica
339	SLD 11	0.007		670.3		101662.9	1	0	0	Si

Verifica a taglio Y §4.2.4.1.2.4 NTC18

X	Comb.	Sfruttamento	VEd	Vc,Rd	Av	Interazione taglio-torsione	Riduzione torsione	Verifica
0	SLV 13	0.004	72.4	20045.7	13.26	Considerata	1	Si

Verifica a taglio Y SLD §4.2.4.1.2.4 NTC18

X	Comb.	Sfruttamento	VEd	Vc,Rd	Av	Interazione taglio-torsione	Riduzione torsione	Verifica
0	SLD 13	0.003	61.3	20045.7	13.26	Considerata	1	Si

Verifica a presso/tenso flessione retta X §§ 4.2.4.1.2.3 - 4.2.4.1.2.6 - 4.2.4.1.2.7 - 4.2.4.1.2.8 NTC18

Verifiche eseguite utilizzando la formula conservativa (6.2) §6.2.1 EN 1993-1-1:2005.

X	Comb.	Sfruttamento	Classe	NEd	NRd	Rid. NRd da VEd	Mx,Ed	Mx,Rd	Rid. Mx,Rd da VEd	Rid. Mx,Rd da NEd	ρx	ρy	Verifica
169.5	SLU 106	0.274	1	23445.8	101662.9	1	-27672	642783	1		0	0	Si

Verifica a presso/tenso flessione retta Y §§ 4.2.4.1.2.3 - 4.2.4.1.2.6 - 4.2.4.1.2.7 - 4.2.4.1.2.8 NTC18

Verifiche eseguite utilizzando la formula conservativa (6.2) §6.2.1 EN 1993-1-1:2005.

X	Comb.	Sfruttamento	Classe	NEd	NRd	Rid. NRd da VEd	My,Ed	My,Rd	Rid. My,Rd da VEd	Rid. My,Rd da NEd	ρx	ρy	Verifica
316.4	SLV 7	0.015	1	670.3	101662.9	1	-2553	308186	1		0	0	Si

Verifica a presso/tenso flessione retta Y SLD §§ 4.2.4.1.2.3 - 4.2.4.1.2.6 - 4.2.4.1.2.7 - 4.2.4.1.2.8 NTC18

Verifiche eseguite utilizzando la formula conservativa (6.2) §6.2.1 EN 1993-1-1:2005.

X	Comb.	Sfruttamento	Classe	NEd	NRd	Rid. NRd da VEd	My,Ed	My,Rd	Rid. My,Rd da VEd	Rid. My,Rd da NEd	ρx	ρy	Verifica
327.7	SLD 7	0.01	1	670.3	101662.9	1	-969	308186	1		0	0	Si

Verifica a presso/tenso flessione deviata §§ 4.2.4.1.2.3 - 4.2.4.1.2.6 - 4.2.4.1.2.7 - 4.2.4.1.2.8 NTC18

Verifiche eseguite utilizzando la formula conservativa (6.2) §6.2.1 EN 1993-1-1:2005.

X	Comb.	Sfruttamento	Classe	NEd	NRd	Rid. NRd da VEd	Mx,Ed	Mx,Rd	My,Ed	My,Rd	Rid. Mx,Rd da VEd	Rid. Mx,Rd da NEd	Rid. My,Rd da VEd	Rid. My,Rd da NEd	α	β	ρx	ρy	Verifica
146.9	SLV 8	0.022	1	670.3	101662.9	1	-4466	642783	-2553	308186	1		1				0	0	Si

Verifica a presso/tenso flessione deviata SLD §§ 4.2.4.1.2.3 - 4.2.4.1.2.6 - 4.2.4.1.2.7 - 4.2.4.1.2.8 NTC18

Verifiche eseguite utilizzando la formula conservativa (6.2) §6.2.1 EN 1993-1-1:2005.

X	Comb.	Sfruttamento	Classe	NEd	NRd	Rid. NRd da VEd	Mx,Ed	Mx,Rd	My,Ed	My,Rd	Rid. Mx,Rd da VEd	Rid. Mx,Rd da NEd	Rid. My,Rd da VEd	Rid. My,Rd da NEd	α	β	ρx	ρy	Verifica
158.2	SLD 7	0.017	1	670.3	101662.9	1	-4416	642783	-969	308186	1		1				0	0	Si

Verifiche ad instabilità

Caratteristiche iniziali

Membratura principale per controllo snellezza; Calcolo di snellezze ed N critici condotti secondo gli assi principali;
Curva X: b; Curva Y: c; Svergolamento: Carico all'estradosso; Curva svergolamento: b;

Dati per instabilità attorno a x

Numero rit.	Presente	Ascissa	Campata	βx/m	Vincolo a entrambi estremi	λx/m	λVer
1	Si	0					
			1-2	1	Si	51.6	Si, (<200)
2	Si	339					

Dati per instabilità attorno a y

Numero rit.	Presente	Ascissa	Campata	βy/n	k,LT	kw,LT	Vincolo a entrambi estremi	λy/n	λVer
1	Si	0							
			1-2	1	1	1	Si	85.1	Si, (<200)
2	Si	339							

Verifica a svergolamento con trazione §4.2.4.1.3.2 NTC18 - §5.5.3 ENV 1993-1-1:1994

X	Comb.	Sfruttamento	Classe	Obblig.	NEd	Mx,Ed	Mx,Eff,Ed	Mb,Rd,x	χ,LT	λ adim. LT	L,LT	M,critico	Verifica
169.5	SLU 125	0.006	1	Si	762.4	-5892.1	-2862.5	514049.3	0.8	0.831	339	976699	Si

Verifica di stabilità per tenso-flessione deviata §5.5.3 - §5.5.4 ENV 1993-1-1:1994

X	Comb.	Sfruttamento	Classe	NEd	Mx,Ed	Mx,Eff,Ed	My,Ed	χ,LT	kLT	ky	M,critico	Wx	Wy	Verifica
146.9	SLV 8	0.012	1	670.3	-4465.6	-1802	-2552.7	0.8	1	1	976699	245.4	117.7	Si

Verifica di stabilità per tenso-flessione deviata SLD §5.5.3 - §5.5.4 ENV 1993-1-1:1994

X	Comb.	Sfruttamento	Classe	NEd	Mx,Ed	Mx,Eff,Ed	My,Ed	χ,LT	kLT	ky	M,critico	Wx	Wy	Verifica
158.2	SLD 7	0.007	1	670.3	-4415.8	-1752.2	-968.8	0.8	1	1	976699	245.4	117.7	Si

Verifica di stabilità a taglio anima Y §4.2.4.1.2.4 [4.2.27] NTC18

η	hw	tw	hw/tw max	Verifica
1.2	13.4	0.6	55.46	Si

Verifica di stabilità a taglio anima Y SLD §4.2.4.1.2.4 [4.2.27] NTC18

η	hw	tw	hw/tw max	Verifica
1.2	13.4	0.6	55.46	Si

Verifiche a deformabilità

Mensola X: No; Mensola Y: No.

Frecce lungo X

Ascissa freccia	Combinazione	Freccia	Luce	L/f	L/f,min	Tipo	Verifica
169.5	SLE RA 1	0	339	10000	250	Totale	Si
169.5	SLE RA 31	0	339	10000	250	Totale	Si
169.5	SLE RA 30	0	339	10000	250	Totale	Si
169.5	SLE RA 29	0	339	10000	250	Totale	Si
169.5	SLE RA 28	0	339	10000	250	Totale	Si
169.5	SLE RA 2	0	339	10000	350	Variabile	Si
169.5	SLE RA 31	0	339	10000	350	Variabile	Si
169.5	SLE RA 30	0	339	10000	350	Variabile	Si
169.5	SLE RA 29	0	339	10000	350	Variabile	Si
169.5	SLE RA 28	0	339	10000	350	Variabile	Si

Frecce lungo Y

Ascissa freccia	Combinazione	Freccia	Luce	L/f	L/f,min	Tipo	Verifica
169.5	SLE RA 19	-0.076	339	4486.5	250	Totale	Si
169.5	SLE RA 18	-0.076	339	4486.5	250	Totale	Si
169.5	SLE RA 7	-0.075	339	4497.5	250	Totale	Si
169.5	SLE RA 6	-0.075	339	4497.5	250	Totale	Si
169.5	SLE RA 15	-0.075	339	4518.6	250	Totale	Si
169.5	SLE RA 19	-0.06	339	5654.6	350	Variabile	Si
169.5	SLE RA 18	-0.06	339	5654.6	350	Variabile	Si
169.5	SLE RA 7	-0.06	339	5672	350	Variabile	Si
169.5	SLE RA 6	-0.06	339	5672	350	Variabile	Si
169.5	SLE RA 15	-0.059	339	5705.6	350	Variabile	Si

Superelemento in acciaio composto dall'asta 71

Caratteristiche del materiale

Acciaio: S275, fyk = 2750

Caratteristiche geometriche

Lunghezza: 128
Nodo iniziale: 42 Nodo finale: 41
Cerniera iniziale: No Cerniera finale: Svincolo: M2, M3
Sovraresistenza: 0% Sisma Z: No

Caratteristiche della sezione

Sezione	Rotazione	Area	Jx	Jy	ix	iy	Wx	Wy	Wplx	Wply
HEA160	0	38.82	1674.7	615.62	6.57	3.98	220.36	76.95	245.43	117.67

Verifiche di resistenza

Verifiche a forza assiale §4.2.4.1.2.1 - §4.2.4.1.2.2 NTC18

X	Comb.	Sfruttamento	Classe	NEd	Nc,Rd	Nt,Rd	Riduzione da taglio	ρx	ρy	Verifica
8.5	SLU 118	0.178		18085.9		101662.9	1	0	0	Si

Verifiche a forza assiale SLD §4.2.4.1.2.1 - §4.2.4.1.2.2 NTC18

X	Comb.	Sfruttamento	Classe	NEd	Nc,Rd	Nt,Rd	Riduzione da taglio	ρx	ρy	Verifica
128	SLD 3	0.02		2012.5		101662.9	1	0	0	Si

Verifica a taglio X §4.2.4.1.2.4 NTC18

X	Comb.	Sfruttamento	VEd	Vc,Rd	Av	Interazione taglio-torsione	Riduzione torsione	Verifica
0	SLV 9	0.001	48.4	43042.3	30.78	Considerata	0.92	Si

Verifica a taglio Y §4.2.4.1.2.4 NTC18

X	Comb.	Sfruttamento	VEd	Vc,Rd	Av	Interazione taglio-torsione	Riduzione torsione	Verifica
0	SLU 72	0.012	244.8	20045.7	13.26	Considerata	1	Si

Verifica a taglio Y SLD §4.2.4.1.2.4 NTC18

X	Comb.	Sfruttamento	VEd	Vc,Rd	Av	Interazione taglio-torsione	Riduzione torsione	Verifica
0	SLD 4	0.003	57.1	19880.1	13.26	Considerata	0.99	Si

Verifica a torsione §4.2.4.1.2.5 NTC18

X	Comb.	Sfruttamento torsione	TEd	TRd	Riduzione taglio resistente	Sfruttamento taglio-torsione	τEd,totale	τRd	Verifica
128	SLV 8	0.181	-2654.2	14685.6	Considerata				Si

Verifica a torsione SLD §4.2.4.1.2.5 NTC18

X	Comb.	Sfruttamento torsione	TEd	TRd	Riduzione taglio resistente	Sfruttamento taglio-torsione	τEd,totale	τRd	Verifica
128	SLD 8	0.069	-1006.4	14685.6	Considerata				Si

Verifica a presso/tenso flessione retta X §§ 4.2.4.1.2.3 - 4.2.4.1.2.6 - 4.2.4.1.2.7 - 4.2.4.1.2.8 NTC18

Verifiche eseguite utilizzando la formula conservativa (6.2) §6.2.1 EN 1993-1-1:2005.

X	Comb.	Sfruttamento	Classe	NEd	NRd	Rid. NRd da VEd	Mx,Ed	Mx,Rd	Rid. Mx,Rd da VEd	Rid. Mx,Rd da NEd	ρx	ρy	Verifica
0	SLU 85	0.221	1	18085.9	101662.9	1	27953	642783	1		0	0	Si

Verifica a presso/tenso flessione retta X SLD §§ 4.2.4.1.2.3 - 4.2.4.1.2.6 - 4.2.4.1.2.7 - 4.2.4.1.2.8 NTC18

Verifiche eseguite utilizzando la formula conservativa (6.2) §6.2.1 EN 1993-1-1:2005.

X	Comb.	Sfruttamento	Classe	NEd	NRd	Rid. NRd da VEd	Mx,Ed	Mx,Rd	Rid. Mx,Rd da VEd	Rid. Mx,Rd da NEd	ρx	ρy	Verifica
115.2	SLD 3	0.02	1	2012.5	101662.9	1	257	642783	1		0	0	Si

Verifica a presso/tenso flessione retta Y §§ 4.2.4.1.2.3 - 4.2.4.1.2.6 - 4.2.4.1.2.7 - 4.2.4.1.2.8 NTC18

Verifiche eseguite utilizzando la formula conservativa (6.2) §6.2.1 EN 1993-1-1:2005.

X	Comb.	Sfruttamento	Classe	NEd	NRd	Rid. NRd da VEd	My,Ed	My,Rd	Rid. My,Rd da VEd	Rid. My,Rd da NEd	ρx	ρy	Verifica
0	SLV 10	0.037	1	1700.5	101662.9	1	-6192	308186	1		0	0	Si

Verifica a presso/tenso flessione retta Y SLD §§ 4.2.4.1.2.3 - 4.2.4.1.2.6 - 4.2.4.1.2.7 - 4.2.4.1.2.8 NTC18

Verifiche eseguite utilizzando la formula conservativa (6.2) §6.2.1 EN 1993-1-1:2005.

X	Comb.	Sfruttamento	Classe	NEd	NRd	Rid. NRd da VEd	My,Ed	My,Rd	Rid. My,Rd da VEd	Rid. My,Rd da NEd	ρx	ρy	Verifica
29.9	SLD 10	0.023	1	1766.1	101662.9	1	-1800	308186	1		0	0	Si

Verifica a presso/tenso flessione deviata §§ 4.2.4.1.2.3 - 4.2.4.1.2.6 - 4.2.4.1.2.7 - 4.2.4.1.2.8 NTC18

Verifiche eseguite utilizzando la formula conservativa (6.2) §6.2.1 EN 1993-1-1:2005.

X	Comb.	Sfruttamento	Classe	NEd	NRd	Rid. NRd da VEd	Mx,Ed	Mx,Rd	My,Ed	My,Rd	Rid. Mx,Rd da VEd	Rid. Mx,Rd da NEd	Rid. My,Rd da VEd	Rid. My,Rd da NEd	α	β	ρx	ρy	Verifica
0	SLV 5	0.045	1	1945.5	101662.9	1	3738	642783	-6192	308186	1		1				0	0	Si

Verifica a presso/tenso flessione deviata SLD §§ 4.2.4.1.2.3 - 4.2.4.1.2.6 - 4.2.4.1.2.7 - 4.2.4.1.2.8 NTC18

Verifiche eseguite utilizzando la formula conservativa (6.2) §6.2.1 EN 1993-1-1:2005.

X	Comb.	Sfruttamento	Classe	NEd	NRd	Rid. NRd da VEd	Mx,Ed	Mx,Rd	My,Ed	My,Rd	Rid. Mx,Rd da VEd	Rid. Mx,Rd da NEd	Rid. My,Rd da VEd	Rid. My,Rd da NEd	α	β	ρx	ρy	Verifica
0	SLD 6	0.03	1	1879.8	101662.9	1	2685	642783	-2348	308186	1		1				0	0	Si

Verifiche ad instabilità

Caratteristiche iniziali

Membratura principale per controllo snellezza; Calcolo di snellezze ed N critici condotti secondo gli assi principali;
Curva X: b; Curva Y: c; Svergolamento: Carico all'estradosso; Curva svergolamento: b;

Dati per instabilità attorno a x

Numero rit.	Presente	Ascissa	Campata	βx/m	Vincolo a entrambi estremi	λx/m	λVer
1	Si	0					
			1-2	1	Si	19.5	Si, (<200)
2	Si	128					

Dati per instabilità attorno a y

Numero rit.	Presente	Ascissa	Campata	βy/n	k,LT	kw,LT	Vincolo a entrambi estremi	λy/n	λVer
1	Si	0							
			1-2	1	1	1	Si	32.1	Si, (<200)
2	Si	128							

Verifica di stabilità a taglio anima Y §4.2.4.1.2.4 [4.2.27] NTC18

η	hw	tw	hw/tw max	Verifica
1.2	13.4	0.6	55.46	Si

Verifica di stabilità a taglio anima Y SLD §4.2.4.1.2.4 [4.2.27] NTC18

η	hw	tw	hw/tw max	Verifica
1.2	13.4	0.6	55.46	Si

Verifiche a deformabilità

Mensola X: No; Mensola Y: No.

Frecce lungo X

Ascissa freccia	Combinazione	Freccia	Luce	L/f	L/f,min	Tipo	Verifica
55.5	SLE RA 1	0	128	10000	250	Totale	Si
55.5	SLE RA 31	0	128	10000	250	Totale	Si
55.5	SLE RA 30	0	128	10000	250	Totale	Si
55.5	SLE RA 29	0	128	10000	250	Totale	Si
55.5	SLE RA 28	0	128	10000	250	Totale	Si
55.5	SLE RA 2	0	128	10000	350	Variabile	Si
55.5	SLE RA 31	0	128	10000	350	Variabile	Si
55.5	SLE RA 30	0	128	10000	350	Variabile	Si
55.5	SLE RA 29	0	128	10000	350	Variabile	Si
55.5	SLE RA 28	0	128	10000	350	Variabile	Si

Frecce lungo Y

Ascissa freccia	Combinazione	Freccia	Luce	L/f	L/f,min	Tipo	Verifica
34.1	SLE RA 1	0	128	10000	250	Totale	Si
51.2	SLE RA 31	0.004	128	10000	250	Totale	Si
34.1	SLE RA 30	0	128	10000	250	Totale	Si
51.2	SLE RA 29	0.004	128	10000	250	Totale	Si
29.9	SLE RA 28	0	128	10000	250	Totale	Si
55.5	SLE RA 2	0.005	128	10000	350	Variabile	Si
55.5	SLE RA 31	0.004	128	10000	350	Variabile	Si
55.5	SLE RA 30	0	128	10000	350	Variabile	Si
55.5	SLE RA 29	0.004	128	10000	350	Variabile	Si
55.5	SLE RA 28	0	128	10000	350	Variabile	Si

Superelemento in acciaio composto dall'asta 72

Caratteristiche del materiale

Acciaio: S275, fyk = 2750

Caratteristiche geometriche

Lunghezza: 197.7
Nodo iniziale: 11 Nodo finale: 43
Cerniera iniziale: Svincolo: M2, M3 Cerniera finale: Svincolo: M2, M3
Sovraresistenza: 0% Sisma Z: No

Caratteristiche della sezione

Sezione	Rotazione	Area	Jx	Jy	ix	iy	Wx	Wy	Wplx	Wply
HEA160	0	38.82	1674.7	615.62	6.57	3.98	220.36	76.95	245.43	117.67

Verifiche di resistenza

Verifiche a forza assiale §4.2.4.1.2.1 - §4.2.4.1.2.2 NTC18

X	Comb.	Sfruttamento	Classe	NEd	Nc,Rd	Nt,Rd	Riduzione da taglio	ρx	ρy	Verifica
0	SLU 118	0.403	1	-40922.8	101662.9		1	0	0	Si

Verifiche a forza assiale SLD §4.2.4.1.2.1 - §4.2.4.1.2.2 NTC18

X	Comb.	Sfruttamento	Classe	NEd	Nc,Rd	Nt,Rd	Riduzione da taglio	ρx	ρy	Verifica
0	SLD 16	0.067	1	-6813.8	101662.9		1	0	0	Si

Verifica a taglio Y §4.2.4.1.2.4 NTC18

X	Comb.	Sfruttamento	VEd	Vc,Rd	Av	Interazione taglio-torsione	Riduzione torsione	Verifica
197.7	SLU 114	0.002	-33.8	20045.7	13.26	Considerata	1	Si

Verifica a taglio Y SLD §4.2.4.1.2.4 NTC18

X	Comb.	Sfruttamento	VEd	Vc,Rd	Av	Interazione taglio-torsione	Riduzione torsione	Verifica
197.7	SLD 8	0.001	-26	19633.7	13.26	Considerata	0.98	Si

Verifica a torsione §4.2.4.1.2.5 NTC18

X	Comb.	Sfruttamento torsione	TEd	TRd	Riduzione taglio resistente	Sfruttamento taglio-torsione	τEd,totale	τRd	Verifica
197.7	SLV 8	0.134	1969.6	14685.6	Considerata				Si

Verifica a torsione SLD §4.2.4.1.2.5 NTC18

X	Comb.	Sfruttamento torsione	TEd	TRd	Riduzione taglio resistente	Sfruttamento taglio-torsione	τEd,totale	τRd	Verifica
197.7	SLD 8	0.051	746.8	14685.6	Considerata				Si

Verifica a presso/tenso flessione retta X §§ 4.2.4.1.2.3 - 4.2.4.1.2.6 - 4.2.4.1.2.7 - 4.2.4.1.2.8 NTC18

Verifiche eseguite utilizzando la formula conservativa (6.2) §6.2.1 EN 1993-1-1:2005.

X	Comb.	Sfruttamento	Classe	NEd	NRd	Rid. NRd da VEd	Mx,Ed	Mx,Rd	Rid. Mx,Rd da VEd	Rid. Mx,Rd da NEd	ρx	ρy	Verifica
92.2	SLU 85	0.405	1	-40904.3	101662.9	1	-1661	642783	1		0	0	Si

Verifica a presso/tenso flessione retta X SLD §§ 4.2.4.1.2.3 - 4.2.4.1.2.6 - 4.2.4.1.2.7 - 4.2.4.1.2.8 NTC18

Verifiche eseguite utilizzando la formula conservativa (6.2) §6.2.1 EN 1993-1-1:2005.

X	Comb.	Sfruttamento	Classe	NEd	NRd	Rid. NRd da VEd	Mx,Ed	Mx,Rd	Rid. Mx,Rd da VEd	Rid. Mx,Rd da NEd	ρx	ρy	Verifica
92.2	SLD 15	0.069	1	-6799.6	101662.9	1	-1278	642783	1		0	0	Si

Verifiche ad instabilità

Caratteristiche iniziali

Membratura principale per controllo snellezza; Calcolo di snellezze ed N critici condotti secondo gli assi principali;
Curva X: b; Curva Y: c; Svergolamento: Carico all'estradosso; Curva svergolamento: b;

Dati per instabilità attorno a x

Numero rit.	Presente	Ascissa	Campata	βx/m	Vincolo a entrambi estremi	λx/m	λVer
1	Si	0					
			1-2	1	Si	30.1	Si, (<200)
2	Si	197.7					

Dati per instabilità attorno a y

Numero rit.	Presente	Ascissa	Campata	βy/n	k,LT	kw,LT	Vincolo a entrambi estremi	λy/n	λVer
1	Si	0							
			1-2	1	1	1	Si	49.6	Si, (<200)
2	Si	197.7							

Verifica di stabilità per pressoflessione §C.4.2.4.1.3.3.2 NTC18

X	Comb.	Sfruttamento	Classe	NEd	NRk	Mx,Ed max	Mx,Rk	My,Ed max	My,Rk	χ,x	χ,y	kxx	kxy	kyx	kyy	χ,LT	Verifica
0	SLU 118	0.505	1	-40922.8	106746.1	1668.7	674922.6	1.5	323595.1	0.947	0.802	1.009	0.725	0.959	1.209	0.933	Si

Verifica di stabilità per pressoflessione SLD §C.4.2.4.1.3.3.2 NTC18

X	Comb.	Sfruttamento	Classe	NEd	NRk	Mx,Ed max	Mx,Rk	My,Ed max	My,Rk	χ,x	χ,y	kxx	kxy	kyx	kyy	χ,LT	Verifica
0	SLD 16	0.086	1	-6813.8	106746.1	1283.6	674922.6	1.1	323595.1	0.947	0.802	0.96	0.596	0.993	0.993	0.933	Si

Verifica di stabilità a taglio anima Y §4.2.4.1.2.4 [4.2.27] NTC18

η	hw	tw	hw/tw max	Verifica
1.2	13.4	0.6	55.46	Si

Verifica di stabilità a taglio anima Y SLD §4.2.4.1.2.4 [4.2.27] NTC18

η	hw	tw	hw/tw max	Verifica
1.2	13.4	0.6	55.46	Si

Verifiche a deformabilità

Mensola X: No; Mensola Y: No.

Frecce lungo X

Ascissa freccia	Combinazione	Freccia	Luce	L/f	L/f,min	Tipo	Verifica
98.8	SLE RA 1	0	197.7	10000	250	Totale	Si
98.8	SLE RA 31	0	197.7	10000	250	Totale	Si
98.8	SLE RA 30	0	197.7	10000	250	Totale	Si
98.8	SLE RA 29	0	197.7	10000	250	Totale	Si
98.8	SLE RA 28	0	197.7	10000	250	Totale	Si
164.7	SLE RA 2	0	197.7	10000	350	Variabile	Si
138.4	SLE RA 31	0	197.7	10000	350	Variabile	Si
151.5	SLE RA 30	0	197.7	10000	350	Variabile	Si
138.4	SLE RA 29	0	197.7	10000	350	Variabile	Si
151.5	SLE RA 28	0	197.7	10000	350	Variabile	Si

Frecce lungo Y

Ascissa freccia	Combinazione	Freccia	Luce	L/f	L/f,min	Tipo	Verifica
98.8	SLE RA 1	-0.002	197.7	10000	250	Totale	Si
98.8	SLE RA 31	-0.002	197.7	10000	250	Totale	Si
98.8	SLE RA 30	-0.002	197.7	10000	250	Totale	Si
98.8	SLE RA 29	-0.002	197.7	10000	250	Totale	Si
98.8	SLE RA 28	-0.002	197.7	10000	250	Totale	Si
184.5	SLE RA 2	0	197.7	10000	350	Variabile	Si
184.5	SLE RA 31	0	197.7	10000	350	Variabile	Si
184.5	SLE RA 30	0	197.7	10000	350	Variabile	Si
184.5	SLE RA 29	0	197.7	10000	350	Variabile	Si
184.5	SLE RA 28	0	197.7	10000	350	Variabile	Si

Superelemento in acciaio composto dall'asta 73

Caratteristiche del materiale

Acciaio: S275, fyk = 2750

Caratteristiche geometriche

Lunghezza: 197.7
Nodo iniziale: 10 Nodo finale: 42
Cerniera iniziale: Svincolo: M2, M3 Cerniera finale: Svincolo: M2, M3
Sovraresistenza: 0% Sisma Z: No

Caratteristiche della sezione

Sezione	Rotazione	Area	Jx	Jy	ix	iy	Wx	Wy	Wplx	Wply
HEA160	0	38.82	1674.7	615.62	6.57	3.98	220.36	76.95	245.43	117.67

Verifiche di resistenza

Verifiche a forza assiale §4.2.4.1.2.1 - §4.2.4.1.2.2 NTC18

X	Comb.	Sfruttamento	Classe	NEd	Nc,Rd	Nt,Rd	Riduzione da taglio	ρx	ρy	Verifica
0	SLU 118	0.403	1	-40999.9	101662.9		1	0	0	Si

Verifiche a forza assiale SLD §4.2.4.1.2.1 - §4.2.4.1.2.2 NTC18

X	Comb.	Sfruttamento	Classe	NEd	Nc,Rd	Nt,Rd	Riduzione da taglio	ρx	ρy	Verifica
0	SLD 3	0.067	1	-6813.8	101662.9		1	0	0	Si

Verifica a taglio Y §4.2.4.1.2.4 NTC18

X	Comb.	Sfruttamento	VEd	Vc,Rd	Av	Interazione taglio-torsione	Riduzione torsione	Verifica
197.7	SLU 114	0.002	-33.8	20045.7	13.26	Considerata	1	Si

Verifica a taglio Y SLD §4.2.4.1.2.4 NTC18

X	Comb.	Sfruttamento	VEd	Vc,Rd	Av	Interazione taglio-torsione	Riduzione torsione	Verifica
197.7	SLD 12	0.001	-26	19633.7	13.26	Considerata	0.98	Si

Verifica a torsione §4.2.4.1.2.5 NTC18

X	Comb.	Sfruttamento torsione	TEd	TRd	Riduzione taglio resistente	Sfruttamento taglio-torsione	τEd,totale	τRd	Verifica
92.2	SLV 12	0.134	-1969.6	14685.6	Considerata				Si

Verifica a torsione SLD §4.2.4.1.2.5 NTC18

X	Comb.	Sfruttamento torsione	TEd	TRd	Riduzione taglio resistente	Sfruttamento taglio-torsione	τEd,totale	τRd	Verifica
92.2	SLD 12	0.051	-746.8	14685.6	Considerata				Si

Verifica a presso/tenso flessione retta X §§ 4.2.4.1.2.3 - 4.2.4.1.2.6 - 4.2.4.1.2.7 - 4.2.4.1.2.8 NTC18

Verifiche eseguite utilizzando la formula conservativa (6.2) §6.2.1 EN 1993-1-1:2005.

X	Comb.	Sfruttamento	Classe	NEd	NRd	Rid. NRd da VEd	Mx,Ed	Mx,Rd	Rid. Mx,Rd da VEd	Rid. Mx,Rd da NEd	ρx	ρy	Verifica
92.2	SLU 85	0.406	1	-40981.4	101662.9	1	-1661	642783	1		0	0	Si

Verifica a presso/tenso flessione retta X SLD §§ 4.2.4.1.2.3 - 4.2.4.1.2.6 - 4.2.4.1.2.7 - 4.2.4.1.2.8 NTC18

Verifiche eseguite utilizzando la formula conservativa (6.2) §6.2.1 EN 1993-1-1:2005.

X	Comb.	Sfruttamento	Classe	NEd	NRd	Rid. NRd da VEd	Mx,Ed	Mx,Rd	Rid. Mx,Rd da VEd	Rid. Mx,Rd da NEd	ρx	ρy	Verifica
92.2	SLD 4	0.069	1	-6799.6	101662.9	1	-1278	642783	1		0	0	Si

Verifiche ad instabilità

Caratteristiche iniziali

Membratura principale per controllo snellezza; Calcolo di snellezze ed N critici condotti secondo gli assi principali;
Curva X: b; Curva Y: c; Svergolamento: Carico all'estradosso; Curva svergolamento: b;

Dati per instabilità attorno a x

Numero rit.	Presente	Ascissa	Campata	βx/m	Vincolo a entrambi estremi	λx/m	λVer
1	Si	0					
			1-2	1	Si	30.1	Si, (<200)
2	Si	197.7					

Dati per instabilità attorno a y

Numero rit.	Presente	Ascissa	Campata	βy/n	k,LT	kw,LT	Vincolo a entrambi estremi	λy/n	λVer
1	Si	0							
			1-2	1	1	1	Si	49.6	Si, (<200)
2	Si	197.7							

Verifica di stabilità per pressoflessione §C.4.2.4.1.3.3.2 NTC18

X	Comb.	Sfruttamento	Classe	NEd	NRk	Mx,Ed max	Mx,Rk	My,Ed max	My,Rk	χ,x	χ,y	kxx	kxy	kyx	kyy	χ,LT	Verifica
0	SLU 118	0.506	1	-40999.9	106746.1	1668.7	674922.6	0	323595.1	0.947	0.802	1.009	0.458	0.959	0.764	0.933	Si

Verifica di stabilità per pressoflessione SLD §C.4.2.4.1.3.3.2 NTC18

X	Comb.	Sfruttamento	Classe	NEd	NRk	Mx,Ed max	Mx,Rk	My,Ed max	My,Rk	χ,x	χ,y	kxx	kxy	kyx	kyy	χ,LT	Verifica
0	SLD 3	0.086	1	-6813.8	106746.1	1283.6	674922.6	0	323595.1	0.947	0.802	0.96	0.376	0.993	0.627	0.933	Si

Verifica di stabilità a taglio anima Y §4.2.4.1.2.4 [4.2.27] NTC18

η	hw	tw	hw/tw max	Verifica
1.2	13.4	0.6	55.46	Si

Verifica di stabilità a taglio anima Y SLD §4.2.4.1.2.4 [4.2.27] NTC18

η	hw	tw	hw/tw max	Verifica
1.2	13.4	0.6	55.46	Si

Verifiche a deformabilità

Mensola X: No; Mensola Y: No.

Frecce lungo X

Ascissa freccia	Combinazione	Freccia	Luce	L/f	L/f,min	Tipo	Verifica
158.1	SLE RA 1	0	197.7	10000	250	Totale	Si
158.1	SLE RA 31	0	197.7	10000	250	Totale	Si
158.1	SLE RA 30	0	197.7	10000	250	Totale	Si
158.1	SLE RA 29	0	197.7	10000	250	Totale	Si
158.1	SLE RA 28	0	197.7	10000	250	Totale	Si
171.3	SLE RA 2	0	197.7	10000	350	Variabile	Si
164.7	SLE RA 31	0	197.7	10000	350	Variabile	Si
164.7	SLE RA 30	0	197.7	10000	350	Variabile	Si
164.7	SLE RA 29	0	197.7	10000	350	Variabile	Si
164.7	SLE RA 28	0	197.7	10000	350	Variabile	Si

Frecce lungo Y

Ascissa freccia	Combinazione	Freccia	Luce	L/f	L/f,min	Tipo	Verifica
98.8	SLE RA 1	-0.002	197.7	10000	250	Totale	Si
98.8	SLE RA 31	-0.002	197.7	10000	250	Totale	Si
98.8	SLE RA 30	-0.002	197.7	10000	250	Totale	Si
98.8	SLE RA 29	-0.002	197.7	10000	250	Totale	Si
98.8	SLE RA 28	-0.002	197.7	10000	250	Totale	Si
177.9	SLE RA 2	0	197.7	10000	350	Variabile	Si
177.9	SLE RA 31	0	197.7	10000	350	Variabile	Si
158.1	SLE RA 30	0	197.7	10000	350	Variabile	Si
177.9	SLE RA 29	0	197.7	10000	350	Variabile	Si
151.5	SLE RA 28	0	197.7	10000	350	Variabile	Si

Superelemento in acciaio composto dall'asta 74

Caratteristiche del materiale

Acciaio: S275, fyk = 2750

Caratteristiche geometriche

Lunghezza: 88.1
Nodo iniziale: 43 Nodo finale: 78
Cerniera iniziale: Svincolo: M2, M3 Cerniera finale: Svincolo: M2, M3
Sovraresistenza: 0% Sisma Z: No

Caratteristiche della sezione

Sezione	Rotazione	Area	Jx	Jy	ix	iy	Wx	Wy	Wplx	Wply
HEA160	0	38.82	1674.7	615.62	6.57	3.98	220.36	76.95	245.43	117.67

Verifiche di resistenza

Verifiche a forza assiale §4.2.4.1.2.1 - §4.2.4.1.2.2 NTC18

X	Comb.	Sfruttamento	Classe	NEd	Nc,Rd	Nt,Rd	Riduzione da taglio	ρx	ρy	Verifica
88.1	SLU 35	0.044		4475.2		101662.9	1	0	0	Si

Verifiche a forza assiale SLD §4.2.4.1.2.1 - §4.2.4.1.2.2 NTC18

X	Comb.	Sfruttamento	Classe	NEd	Nc,Rd	Nt,Rd	Riduzione da taglio	ρx	ρy	Verifica
0	SLD 16	0.005	1	-512	101662.9		1	0	0	Si

Verifica a taglio Y §4.2.4.1.2.4 NTC18

X	Comb.	Sfruttamento	VEd	Vc,Rd	Av	Interazione taglio-torsione	Riduzione torsione	Verifica
0	SLU 84	0.001	14.4	20045.7	13.26	Considerata	1	Si

Verifica a torsione §4.2.4.1.2.5 NTC18

X	Comb.	Sfruttamento torsione	TEd	TRd	Riduzione taglio resistente	Sfruttamento taglio-torsione	τEd,totale	τRd	Verifica
47	SLV 5	0.056	-825.9	14685.6	Considerata				Si

Verifica a torsione SLD §4.2.4.1.2.5 NTC18

X	Comb.	Sfruttamento torsione	TEd	TRd	Riduzione taglio resistente	Sfruttamento taglio-torsione	τEd,totale	τRd	Verifica
47	SLD 5	0.021	-313.2	14685.6	Considerata				Si

Verifica a presso/tenso flessione retta X §§ 4.2.4.1.2.3 - 4.2.4.1.2.6 - 4.2.4.1.2.7 - 4.2.4.1.2.8 NTC18

Verifiche eseguite utilizzando la formula conservativa (6.2) §6.2.1 EN 1993-1-1:2005.

X	Comb.	Sfruttamento	Classe	NEd	NRd	Rid. NRd da VEd	Mx,Ed	Mx,Rd	Rid. Mx,Rd da VEd	Rid. Mx,Rd da NEd	ρx	ρy	Verifica
47	SLU 35	0.044	1	4468.1	101662.9	1	-242	642783	1		0	0	Si

Verifica a presso/tenso flessione retta X SLD §§ 4.2.4.1.2.3 - 4.2.4.1.2.6 - 4.2.4.1.2.7 - 4.2.4.1.2.8 NTC18

Verifiche eseguite utilizzando la formula conservativa (6.2) §6.2.1 EN 1993-1-1:2005.

X	Comb.	Sfruttamento	Classe	NEd	NRd	Rid. NRd da VEd	Mx,Ed	Mx,Rd	Rid. Mx,Rd da VEd	Rid. Mx,Rd da NEd	ρx	ρy	Verifica
41.1	SLD 15	0.005	1	-504.9	101662.9	1	-242	642783	1		0	0	Si

Verifiche ad instabilità

Caratteristiche iniziali

Membratura principale per controllo snellezza; Calcolo di snellezze ed N critici condotti secondo gli assi principali;
Curva X: b; Curva Y: c; Svergolamento: Carico all'estradosso; Curva svergolamento: b;

Dati per instabilità attorno a x

Numero rit.	Presente	Ascissa	Campata	βx/m	Vincolo a entrambi estremi	λx/m	λVer
1	Si	0					
			1-2	1	Si	13.4	Si, (<200)
2	Si	88.1					

Dati per instabilità attorno a y

Numero rit.	Presente	Ascissa	Campata	βy/n	k,LT	kw,LT	Vincolo a entrambi estremi	λy/n	λVer
1	Si	0							
			1-2	1	1	1	Si	22.1	Si, (<200)
2	Si	88.1							

Verifica di stabilità per pressoflessione §C.4.2.4.1.3.3.2 NTC18

X	Comb.	Sfruttamento	Classe	NEd	NRk	Mx,Ed max	Mx,Rk	My,Ed max	My,Rk	χ,x	χ,y	kxx	kxy	kyx	kyy	χ,LT	Verifica
0	SLU 131	0.009	1	-877.7	106746.1	316.2	674922.6	0	323595.1	1	0.972	0.95	0.36	0.855	0.6	1	Si

Verifica di stabilità per pressoflessione SLD §C.4.2.4.1.3.3.2 NTC18

X	Comb.	Sfruttamento	Classe	NEd	NRk	Mx,Ed max	Mx,Rk	My,Ed max	My,Rk	χ,x	χ,y	kxx	kxy	kyx	kyy	χ,LT	Verifica
0	SLD 16	0.006	1	-512	106746.1	243.2	674922.6	0	323595.1	1	0.972	0.95	0.36	0.855	0.6	1	Si

Verifica di stabilità a taglio anima Y §4.2.4.1.2.4 [4.2.27] NTC18

η	hw	tw	hw/tw max	Verifica
1.2	13.4	0.6	55.46	Si

Verifica di stabilità a taglio anima Y SLD §4.2.4.1.2.4 [4.2.27] NTC18

η	hw	tw	hw/tw max	Verifica
1.2	13.4	0.6	55.46	Si

Verifiche a deformabilità

Mensola X: No; Mensola Y: No.

Frecce lungo X

Ascissa freccia	Combinazione	Freccia	Luce	L/f	L/f,min	Tipo	Verifica
20.5	SLE RA 1	0	88.1	10000	250	Totale	Si
85.1	SLE RA 31	0	88.1	10000	250	Totale	Si
85.1	SLE RA 30	0	88.1	10000	250	Totale	Si
85.1	SLE RA 29	0	88.1	10000	250	Totale	Si
85.1	SLE RA 28	0	88.1	10000	250	Totale	Si
2.9	SLE RA 2	0	88.1	10000	350	Variabile	Si
85.1	SLE RA 31	0	88.1	10000	350	Variabile	Si
85.1	SLE RA 30	0	88.1	10000	350	Variabile	Si
85.1	SLE RA 29	0	88.1	10000	350	Variabile	Si
85.1	SLE RA 28	0	88.1	10000	350	Variabile	Si

Frecce lungo Y

Ascissa freccia	Combinazione	Freccia	Luce	L/f	L/f,min	Tipo	Verifica
44	SLE RA 1	0	88.1	10000	250	Totale	Si
44	SLE RA 31	0	88.1	10000	250	Totale	Si
44	SLE RA 30	0	88.1	10000	250	Totale	Si
44	SLE RA 29	0	88.1	10000	250	Totale	Si
44	SLE RA 28	0	88.1	10000	250	Totale	Si
20.5	SLE RA 2	0	88.1	10000	350	Variabile	Si
20.5	SLE RA 31	0	88.1	10000	350	Variabile	Si
38.2	SLE RA 30	0	88.1	10000	350	Variabile	Si
20.5	SLE RA 29	0	88.1	10000	350	Variabile	Si
17.6	SLE RA 28	0	88.1	10000	350	Variabile	Si

Superelemento in acciaio composto dall'asta 75

Caratteristiche del materiale

Acciaio: S275, fyk = 2750

Caratteristiche geometriche

Lunghezza: 88.1
Nodo iniziale: 42 Nodo finale: 77
Cerniera iniziale: Svincolo: M2, M3 Cerniera finale: Svincolo: M2, M3
Sovraresistenza: 0% Sisma Z: No

Caratteristiche della sezione

Sezione	Rotazione	Area	Jx	Jy	ix	iy	Wx	Wy	Wplx	Wply
HEA160	0	38.82	1674.7	615.62	6.57	3.98	220.36	76.95	245.43	117.67

Verifiche di resistenza

Verifiche a forza assiale §4.2.4.1.2.1 - §4.2.4.1.2.2 NTC18

X	Comb.	Sfruttamento	Classe	NEd	Nc,Rd	Nt,Rd	Riduzione da taglio	ρx	ρy	Verifica
88.1	SLU 2	0.044		4475.2		101662.9	1	0	0	Si

Verifiche a forza assiale SLD §4.2.4.1.2.1 - §4.2.4.1.2.2 NTC18

X	Comb.	Sfruttamento	Classe	NEd	Nc,Rd	Nt,Rd	Riduzione da taglio	ρx	ρy	Verifica
0	SLD 3	0.005	1	-512	101662.9		1	0	0	Si

Verifica a taglio Y §4.2.4.1.2.4 NTC18

X	Comb.	Sfruttamento	VEd	Vc,Rd	Av	Interazione taglio-torsione	Riduzione torsione	Verifica
0	SLU 84	0.001	14.4	20045.7	13.26	Considerata	1	Si

Verifica a torsione §4.2.4.1.2.5 NTC18

X	Comb.	Sfruttamento torsione	TEd	TRd	Riduzione taglio resistente	Sfruttamento taglio-torsione	τEd,totale	τRd	Verifica
88.1	SLV 10	0.056	825.9	14685.6	Considerata				Si

Verifica a torsione SLD §4.2.4.1.2.5 NTC18

X	Comb.	Sfruttamento torsione	TEd	TRd	Riduzione taglio resistente	Sfruttamento taglio-torsione	τEd,totale	τRd	Verifica
88.1	SLD 10	0.021	313.2	14685.6	Considerata				Si

Verifica a presso/tenso flessione retta X §§ 4.2.4.1.2.3 - 4.2.4.1.2.6 - 4.2.4.1.2.7 - 4.2.4.1.2.8 NTC18

Verifiche eseguite utilizzando la formula conservativa (6.2) §6.2.1 EN 1993-1-1:2005.

X	Comb.	Sfruttamento	Classe	NEd	NRd	Rid. NRd da VEd	Mx,Ed	Mx,Rd	Rid. Mx,Rd da VEd	Rid. Mx,Rd da NEd	ρx	ρy	Verifica
47	SLU 35	0.044	1	4468.1	101662.9	1	-242	642783	1		0	0	Si

Verifica a presso/tenso flessione retta X SLD §§ 4.2.4.1.2.3 - 4.2.4.1.2.6 - 4.2.4.1.2.7 - 4.2.4.1.2.8 NTC18

Verifiche eseguite utilizzando la formula conservativa (6.2) §6.2.1 EN 1993-1-1:2005.

X	Comb.	Sfruttamento	Classe	NEd	NRd	Rid. NRd da VEd	Mx,Ed	Mx,Rd	Rid. Mx,Rd da VEd	Rid. Mx,Rd da NEd	ρx	ρy	Verifica
41.1	SLD 3	0.005	1	-504.9	101662.9	1	-242	642783	1		0	0	Si

Verifiche ad instabilità

Caratteristiche iniziali

Membratura principale per controllo snellezza; Calcolo di snellezze ed N critici condotti secondo gli assi principali;
Curva X: b; Curva Y: c; Svergolamento: Carico all'estradosso; Curva svergolamento: b;

Dati per instabilità attorno a x

Numero rit.	Presente	Ascissa	Campata	βx/m	Vincolo a entrambi estremi	λx/m	λVer
1	Si	0					
			1-2	1	Si	13.4	Si, (<200)
2	Si	88.1					

Dati per instabilità attorno a y

Numero rit.	Presente	Ascissa	Campata	βy/n	k,LT	kw,LT	Vincolo a entrambi estremi	λy/n	λVer
1	Si	0							
			1-2	1	1	1	Si	22.1	Si, (<200)
2	Si	88.1							

Verifica di stabilità per pressoflessione §C.4.2.4.1.3.3.2 NTC18

X	Comb.	Sfruttamento	Classe	NEd	NRk	Mx,Ed max	Mx,Rk	My,Ed max	My,Rk	χ,x	χ,y	kxx	kxy	kyx	kyy	χ,LT	Verifica
0	SLU 98	0.008	1	-735.3	106746.1	316.2	674922.6	0	323595.1	1	0.972	0.95	0.36	0.855	0.6	1	Si

Verifica di stabilità per pressoflessione SLD §C.4.2.4.1.3.3.2 NTC18

X	Comb.	Sfruttamento	Classe	NEd	NRk	Mx,Ed max	Mx,Rk	My,Ed max	My,Rk	χ,x	χ,y	kxx	kxy	kyx	kyy	χ,LT	Verifica
0	SLD 3	0.006	1	-512	106746.1	243.2	674922.6	0	323595.1	1	0.972	0.95	0.36	0.855	0.6	1	Si

Verifica di stabilità a taglio anima Y §4.2.4.1.2.4 [4.2.27] NTC18

η	hw	tw	hw/tw max	Verifica
1.2	13.4	0.6	55.46	Si

Verifica di stabilità a taglio anima Y SLD §4.2.4.1.2.4 [4.2.27] NTC18

η	hw	tw	hw/tw max	Verifica
1.2	13.4	0.6	55.46	Si

Verifiche a deformabilità

Mensola X: No; Mensola Y: No.

Frecce lungo X

Ascissa freccia	Combinazione	Freccia	Luce	L/f	L/f,min	Tipo	Verifica
20.5	SLE RA 1	0	88.1	10000	250	Totale	Si
64.6	SLE RA 31	0	88.1	10000	250	Totale	Si
64.6	SLE RA 30	0	88.1	10000	250	Totale	Si
64.6	SLE RA 29	0	88.1	10000	250	Totale	Si
64.6	SLE RA 28	0	88.1	10000	250	Totale	Si
2.9	SLE RA 2	0	88.1	10000	350	Variabile	Si
64.6	SLE RA 31	0	88.1	10000	350	Variabile	Si
64.6	SLE RA 30	0	88.1	10000	350	Variabile	Si
64.6	SLE RA 29	0	88.1	10000	350	Variabile	Si
64.6	SLE RA 28	0	88.1	10000	350	Variabile	Si

Frecce lungo Y

Ascissa freccia	Combinazione	Freccia	Luce	L/f	L/f,min	Tipo	Verifica
44	SLE RA 1	0	88.1	10000	250	Totale	Si
44	SLE RA 31	0	88.1	10000	250	Totale	Si
44	SLE RA 30	0	88.1	10000	250	Totale	Si
44	SLE RA 29	0	88.1	10000	250	Totale	Si
44	SLE RA 28	0	88.1	10000	250	Totale	Si
20.5	SLE RA 2	0	88.1	10000	350	Variabile	Si
20.5	SLE RA 31	0	88.1	10000	350	Variabile	Si
55.8	SLE RA 30	0	88.1	10000	350	Variabile	Si
20.5	SLE RA 29	0	88.1	10000	350	Variabile	Si
5.9	SLE RA 28	0	88.1	10000	350	Variabile	Si

Superelemento in acciaio composto dall'asta 76

Caratteristiche del materiale

Acciaio: S275, fyk = 2750

Caratteristiche geometriche

Lunghezza: 108.7
Nodo iniziale: 12 Nodo finale: 45
Cerniera iniziale: No Cerniera finale: No
Sovraresistenza: 0% Sisma Z: No

Caratteristiche della sezione

Sezione	Rotazione	Area	Jx	Jy	ix	iy	Wx	Wy	Wplx	Wply
HEA240	0	76.92	7771.3	2768.96	10.05	6	675.77	230.75	745.47	351.79

Verifiche di resistenza

Verifiche a forza assiale §4.2.4.1.2.1 - §4.2.4.1.2.2 NTC18

X	Comb.	Sfruttamento	Classe	NEd	Nc,Rd	Nt,Rd	Riduzione da taglio	ρx	ρy	Verifica
0	SLU 84	0.294	1	-59150	201468.8		1	0	0	Si

Verifiche a forza assiale SLD §4.2.4.1.2.1 - §4.2.4.1.2.2 NTC18

X	Comb.	Sfruttamento	Classe	NEd	Nc,Rd	Nt,Rd	Riduzione da taglio	ρx	ρy	Verifica
0	SLD 16	0.079	1	-15873.2	201468.8		1	0	0	Si

Verifica a taglio X §4.2.4.1.2.4 NTC18

X	Comb.	Sfruttamento	VEd	Vc,Rd	Av	Interazione taglio-torsione	Riduzione torsione	Verifica
108.7	SLV 6	0.004	340.7	91526	61.47	Considerata	0.98	Si

Verifica a taglio X SLD §4.2.4.1.2.4 NTC18

X	Comb.	Sfruttamento	VEd	Vc,Rd	Av	Interazione taglio-torsione	Riduzione torsione	Verifica
108.7	SLD 6	0.001	129.2	92416.4	61.47	Considerata	0.99	Si

Verifica a taglio Y §4.2.4.1.2.4 NTC18

X	Comb.	Sfruttamento	VEd	Vc,Rd	Av	Interazione taglio-torsione	Riduzione torsione	Verifica
108.7	SLU 84	0.16	-6118.5	38202.6	25.26	Considerata	1	Si

Verifica a taglio Y SLD §4.2.4.1.2.4 NTC18

X	Comb.	Sfruttamento	VEd	Vc,Rd	Av	Interazione taglio-torsione	Riduzione torsione	Verifica
108.7	SLD 4	0.05	-1889.4	38136.2	25.26	Considerata	1	Si

Verifica a torsione §4.2.4.1.2.5 NTC18

X	Comb.	Sfruttamento torsione	TEd	TRd	Riduzione taglio resistente	Sfruttamento taglio-torsione	τEd,totale	τRd	Verifica
58	SLV 9	0.038	-1468.9	38489.3	Considerata				Si

Verifica a torsione SLD §4.2.4.1.2.5 NTC18

X	Comb.	Sfruttamento torsione	TEd	TRd	Riduzione taglio resistente	Sfruttamento taglio-torsione	τEd,totale	τRd	Verifica
58	SLD 9	0.014	-556.9	38489.3	Considerata				Si

Verifica a presso/tenso flessione retta X §§ 4.2.4.1.2.3 - 4.2.4.1.2.6 - 4.2.4.1.2.7 - 4.2.4.1.2.8 NTC18

Verifiche eseguite utilizzando la formula conservativa (6.2) §6.2.1 EN 1993-1-1:2005.

X	Comb.	Sfruttamento	Classe	NEd	NRd	Rid. NRd da VEd	Mx,Ed	Mx,Rd	Rid. Mx,Rd da VEd	Rid. Mx,Rd da NEd	ρx	ρy	Verifica
108.7	SLU 84	0.507	1	-51566.6	201468.8	1	489637	1952423	1		0	0	Si

Verifica a presso/tenso flessione retta X SLD §§ 4.2.4.1.2.3 - 4.2.4.1.2.6 - 4.2.4.1.2.7 - 4.2.4.1.2.8 NTC18

Verifiche eseguite utilizzando la formula conservativa (6.2) §6.2.1 EN 1993-1-1:2005.

X	Comb.	Sfruttamento	Classe	NEd	NRd	Rid. NRd da VEd	Mx,Ed	Mx,Rd	Rid. Mx,Rd da VEd	Rid. Mx,Rd da NEd	ρx	ρy	Verifica
7.2	SLD 16	0.08	1	-15484.4	201468.8	1	-5191	1952423	1		0	0	Si

Verifica a presso/tenso flessione retta Y §§ 4.2.4.1.2.3 - 4.2.4.1.2.6 - 4.2.4.1.2.7 - 4.2.4.1.2.8 NTC18

Verifiche eseguite utilizzando la formula conservativa (6.2) §6.2.1 EN 1993-1-1:2005.

X	Comb.	Sfruttamento	Classe	NEd	NRd	Rid. NRd da VEd	My,Ed	My,Rd	Rid. My,Rd da VEd	Rid. My,Rd da NEd	ρx	ρy	Verifica
54.3	SLV 8	0.082	1	-12761.3	201468.8	1	-17338	921364	1		0	0	Si

Verifica a presso/tenso flessione retta Y SLD §§ 4.2.4.1.2.3 - 4.2.4.1.2.6 - 4.2.4.1.2.7 - 4.2.4.1.2.8 NTC18

Verifiche eseguite utilizzando la formula conservativa (6.2) §6.2.1 EN 1993-1-1:2005.

X	Comb.	Sfruttamento	Classe	NEd	NRd	Rid. NRd da VEd	My,Ed	My,Rd	Rid. My,Rd da VEd	Rid. My,Rd da NEd	ρx	ρy	Verifica
0	SLD 11	0.079	1	-15790.2	201468.8	1	445	921364	1		0	0	Si

Verifica a presso/tenso flessione deviata §§ 4.2.4.1.2.3 - 4.2.4.1.2.6 - 4.2.4.1.2.7 - 4.2.4.1.2.8 NTC18

Verifiche eseguite utilizzando la formula conservativa (6.2) §6.2.1 EN 1993-1-1:2005.

X	Comb.	Sfruttamento	Classe	NEd	NRd	Rid. NRd da VEd	Mx,Ed	Mx,Rd	My,Ed	My,Rd	Rid. Mx,Rd da VEd	Rid. Mx,Rd da NEd	Rid. My,Rd da VEd	Rid. My,Rd da NEd	α	β	ρx	ρy	Verifica
108.7	SLV 7	0.122	1	-9844.6	201468.8	1	66578	1952423	-35850	921364	1		1				0	0	Si

Verifica a presso/tenso flessione deviata SLD §§ 4.2.4.1.2.3 - 4.2.4.1.2.6 - 4.2.4.1.2.7 - 4.2.4.1.2.8 NTC18

Verifiche eseguite utilizzando la formula conservativa (6.2) §6.2.1 EN 1993-1-1:2005.

X	Comb.	Sfruttamento	Classe	NEd	NRd	Rid. NRd da VEd	Mx,Ed	Mx,Rd	My,Ed	My,Rd	Rid. Mx,Rd da VEd	Rid. Mx,Rd da NEd	Rid. My,Rd da VEd	Rid. My,Rd da NEd	α	β	ρx	ρy	Verifica
108.7	SLD 8	0.096	1	-9885.7	201468.8	1	62638	1952423	-13592	921364	1		1				0	0	Si

Verifiche ad instabilità

Caratteristiche iniziali

Membratura principale per controllo snellezza; Calcolo di snellezze ed N critici condotti secondo gli assi principali;
Curva X: b; Curva Y: c; Svergolamento: Carico all'estradosso; Curva svergolamento: b;

Dati per instabilità attorno a x

Numero rit.	Presente	Ascissa	Campata	βx/m	Vincolo a entrambi estremi	λx/m	λVer
1	Si	0					
			1-2	1	Si	10.8	Si, (<200)
2	Si	108.7					

Dati per instabilità attorno a y

Numero rit.	Presente	Ascissa	Campata	βy/n	k,LT	kw,LT	Vincolo a entrambi estremi	λy/n	λVer
1	Si	0							
			1-2	1	1	1	Si	18.1	Si, (<200)
2	Si	108.7							

Verifica di stabilità per pressoflessione §C.4.2.4.1.3.3.2 NTC18

X	Comb.	Sfruttamento	Classe	NEd	NRk	Mx,Ed max	Mx,Rk	My,Ed max	My,Rk	χ,x	χ,y	kxx	kxy	kyx	kyy	χ,LT	Verifica
0	SLU 84	0.498	1	-59150	211542.2	489636.9	2050044	25.3	967432.2	1	0.996	0.517	0.342	0.809	0.57	1	Si

Verifica di stabilità per pressoflessione SLD §C.4.2.4.1.3.3.2 NTC18

X	Comb.	Sfruttamento	Classe	NEd	NRk	Mx,Ed max	Mx,Rk	My,Ed max	My,Rk	χ,x	χ,y	kxx	kxy	kyx	kyy	χ,LT	Verifica
0	SLD 7	0.113	1	-15719.1	211542.2	62637.6	2050044	13592.2	967432.2	1	0.996	0.398	0.347	0.809	0.578	1	Si

Verifica di stabilità a taglio anima Y §4.2.4.1.2.4 [4.2.27] NTC18

η	hw	tw	hw/tw max	Verifica
1.2	20.6	0.8	55.46	Si

Verifica di stabilità a taglio anima Y SLD §4.2.4.1.2.4 [4.2.27] NTC18

η	hw	tw	hw/tw max	Verifica
1.2	20.6	0.8	55.46	Si

Verifiche a deformabilità

Mensola X: No; Mensola Y: No.

Frecce lungo X

Ascissa freccia	Combinazione	Freccia	Luce	L/f	L/f,min	Tipo	Verifica
32.6	SLE RA 1	0	108.7	10000	250	Totale	Si
61.6	SLE RA 31	0	108.7	10000	250	Totale	Si
61.6	SLE RA 30	0	108.7	10000	250	Totale	Si
61.6	SLE RA 29	0	108.7	10000	250	Totale	Si
61.6	SLE RA 28	0	108.7	10000	250	Totale	Si

Ascissa freccia	Combinazione	Freccia	Luce	L/f	L/f,min	Tipo	Verifica
61.6	SLE RA 2	0	108.7	10000	350	Variabile	Si
61.6	SLE RA 31	0	108.7	10000	350	Variabile	Si
61.6	SLE RA 30	0	108.7	10000	350	Variabile	Si
61.6	SLE RA 29	0	108.7	10000	350	Variabile	Si
61.6	SLE RA 28	0	108.7	10000	350	Variabile	Si

Frecce lungo Y

Ascissa freccia	Combinazione	Freccia	Luce	L/f	L/f,min	Tipo	Verifica
47.1	SLE RA 1	-0.002	108.7	10000	250	Totale	Si
68.8	SLE RA 31	0.008	108.7	10000	250	Totale	Si
47.1	SLE RA 30	-0.002	108.7	10000	250	Totale	Si
68.8	SLE RA 29	0.007	108.7	10000	250	Totale	Si
47.1	SLE RA 28	-0.002	108.7	10000	250	Totale	Si
61.6	SLE RA 19	0.013	108.7	8516.8	350	Variabile	Si
61.6	SLE RA 18	0.013	108.7	8516.8	350	Variabile	Si
61.6	SLE RA 7	0.013	108.7	8537.9	350	Variabile	Si
61.6	SLE RA 6	0.013	108.7	8537.9	350	Variabile	Si
61.6	SLE RA 15	0.013	108.7	8603	350	Variabile	Si

Superelemento in acciaio composto dall'asta 77

Caratteristiche del materiale

Acciaio: S275, fyk = 2750

Caratteristiche geometriche

Lunghezza: 108.7
Nodo iniziale: 13 Nodo finale: 48
Cerniera iniziale: No Cerniera finale: No
Sovraresistenza: 0% Sisma Z: No

Caratteristiche della sezione

Sezione	Rotazione	Area	Jx	Jy	ix	iy	Wx	Wy	Wplx	Wply
HEA240	0	76.92	7771.3	2768.96	10.05	6	675.77	230.75	745.47	351.79

Verifiche di resistenza

Verifiche a forza assiale §4.2.4.1.2.1 - §4.2.4.1.2.2 NTC18

X	Comb.	Sfruttamento	Classe	NEd	Nc,Rd	Nt,Rd	Riduzione da taglio	ρx	ρy	Verifica
0	SLU 117	0.294	1	-59292.8	201468.8		1	0	0	Si

Verifiche a forza assiale SLD §4.2.4.1.2.1 - §4.2.4.1.2.2 NTC18

X	Comb.	Sfruttamento	Classe	NEd	Nc,Rd	Nt,Rd	Riduzione da taglio	ρx	ρy	Verifica
0	SLD 4	0.079	1	-15873.2	201468.8		1	0	0	Si

Verifica a taglio X §4.2.4.1.2.4 NTC18

X	Comb.	Sfruttamento	VEd	Vc,Rd	Av	Interazione taglio-torsione	Riduzione torsione	Verifica
108.7	SLV 10	0.004	-340.7	91526	61.47	Considerata	0.98	Si

Verifica a taglio X SLD §4.2.4.1.2.4 NTC18

X	Comb.	Sfruttamento	VEd	Vc,Rd	Av	Interazione taglio-torsione	Riduzione torsione	Verifica
108.7	SLD 10	0.001	-129.2	92416.4	61.47	Considerata	0.99	Si

Verifica a taglio Y §4.2.4.1.2.4 NTC18

X	Comb.	Sfruttamento	VEd	Vc,Rd	Av	Interazione taglio-torsione	Riduzione torsione	Verifica
108.7	SLU 84	0.16	-6124.5	38202.6	25.26	Considerata	1	Si

Verifica a taglio Y SLD §4.2.4.1.2.4 NTC18

X	Comb.	Sfruttamento	VEd	Vc,Rd	Av	Interazione taglio-torsione	Riduzione torsione	Verifica
108.7	SLD 16	0.05	-1889.4	38136.2	25.26	Considerata	1	Si

Verifica a torsione §4.2.4.1.2.5 NTC18

X	Comb.	Sfruttamento torsione	TEd	TRd	Riduzione taglio resistente	Sfruttamento taglio-torsione	τEd,totale	τRd	Verifica
0	SLV 5	0.038	1468.9	38489.3	Considerata				Si

Verifica a torsione SLD §4.2.4.1.2.5 NTC18

X	Comb.	Sfruttamento torsione	TEd	TRd	Riduzione taglio resistente	Sfruttamento taglio-torsione	τEd,totale	τRd	Verifica
0	SLD 5	0.014	556.9	38489.3	Considerata				Si

Verifica a presso/tenso flessione retta X §§ 4.2.4.1.2.3 - 4.2.4.1.2.6 - 4.2.4.1.2.7 - 4.2.4.1.2.8 NTC18

Verifiche eseguite utilizzando la formula conservativa (6.2) §6.2.1 EN 1993-1-1:2005.

X	Comb.	Sfruttamento	Classe	NEd	NRd	Rid. NRd da VEd	Mx,Ed	Mx,Rd	Rid. Mx,Rd da VEd	Rid. Mx,Rd da NEd	ρx	ρy	Verifica
108.7	SLU 117	0.508	1	-51709.4	201468.8	1	490288	1952423	1		0	0	Si

Verifica a presso/tenso flessione retta X SLD §§ 4.2.4.1.2.3 - 4.2.4.1.2.6 - 4.2.4.1.2.7 - 4.2.4.1.2.8 NTC18

Verifiche eseguite utilizzando la formula conservativa (6.2) §6.2.1 EN 1993-1-1:2005.

X	Comb.	Sfruttamento	Classe	NEd	NRd	Rid. NRd da VEd	Mx,Ed	Mx,Rd	Rid. Mx,Rd da VEd	Rid. Mx,Rd da NEd	ρx	ρy	Verifica
7.2	SLD 3	0.08	1	-15484.4	201468.8	1	-5191	1952423	1		0	0	Si

Verifica a presso/tenso flessione retta Y §§ 4.2.4.1.2.3 - 4.2.4.1.2.6 - 4.2.4.1.2.7 - 4.2.4.1.2.8 NTC18

Verifiche eseguite utilizzando la formula conservativa (6.2) §6.2.1 EN 1993-1-1:2005.

X	Comb.	Sfruttamento	Classe	NEd	NRd	Rid. NRd da VEd	My,Ed	My,Rd	Rid. My,Rd da VEd	Rid. My,Rd da NEd	ρx	ρy	Verifica
54.3	SLV 12	0.082	1	-12761.3	201468.8	1	17338	921364	1		0	0	Si

Verifica a presso/tenso flessione retta Y SLD §§ 4.2.4.1.2.3 - 4.2.4.1.2.6 - 4.2.4.1.2.7 - 4.2.4.1.2.8 NTC18

Verifiche eseguite utilizzando la formula conservativa (6.2) §6.2.1 EN 1993-1-1:2005.

X	Comb.	Sfruttamento	Classe	NEd	NRd	Rid. NRd da VEd	My,Ed	My,Rd	Rid. My,Rd da VEd	Rid. My,Rd da NEd	ρx	ρy	Verifica
0	SLD 7	0.079	1	-15790.2	201468.8	1	-445	921364	1		0	0	Si

Verifica a presso/tenso flessione deviata §§ 4.2.4.1.2.3 - 4.2.4.1.2.6 - 4.2.4.1.2.7 - 4.2.4.1.2.8 NTC18

Verifiche eseguite utilizzando la formula conservativa (6.2) §6.2.1 EN 1993-1-1:2005.

X	Comb.	Sfruttamento	Classe	NEd	NRd	Rid. NRd da VEd	Mx,Ed	Mx,Rd	My,Ed	My,Rd	Rid. Mx,Rd da VEd	Rid. Mx,Rd da NEd	Rid. My,Rd da VEd	Rid. My,Rd da NEd	α	β	ρx	ρy	Verifica
108.7	SLV 12	0.122	1	-9844.6	201468.8	1	66578	1952423	35850	921364	1		1				0	0	Si

Verifica a presso/tenso flessione deviata SLD §§ 4.2.4.1.2.3 - 4.2.4.1.2.6 - 4.2.4.1.2.7 - 4.2.4.1.2.8 NTC18

Verifiche eseguite utilizzando la formula conservativa (6.2) §6.2.1 EN 1993-1-1:2005.

X	Comb.	Sfruttamento	Classe	NEd	NRd	Rid. NRd da VEd	Mx,Ed	Mx,Rd	My,Ed	My,Rd	Rid. Mx,Rd da VEd	Rid. Mx,Rd da NEd	Rid. My,Rd da VEd	Rid. My,Rd da NEd	α	β	ρx	ρy	Verifica
108.7	SLD 11	0.096	1	-9885.7	201468.8	1	62638	1952423	13592	921364	1		1				0	0	Si

Verifiche ad instabilità

Caratteristiche iniziali

Membratura principale per controllo snellezza; Calcolo di snellezze ed N critici condotti secondo gli assi principali;
Curva X: b; Curva Y: c; Svergolamento: Carico all'estradosso; Curva svergolamento: b;

Dati per instabilità attorno a x

Numero rit.	Presente	Ascissa	Campata	βx/m	Vincolo a entrambi estremi	λx/m	λVer
1	Si	0					
			1-2	1	Si	10.8	Si, (<200)
2	Si	108.7					

Dati per instabilità attorno a y

Numero rit.	Presente	Ascissa	Campata	βy/n	k,LT	kw,LT	Vincolo a entrambi estremi	λy/n	λVer
1	Si	0							
			1-2	1	1	1	Si	18.1	Si, (<200)
2	Si	108.7							

Verifica di stabilità per pressoflessione §C.4.2.4.1.3.3.2 NTC18

X	Comb.	Sfruttamento	Classe	NEd	NRk	Mx,Ed max	Mx,Rk	My,Ed max	My,Rk	χ,x	χ,y	kxx	kxy	kyx	kyy	χ,LT	Verifica
0	SLU 84	0.499	1	-59292.8	211542.2	490287.9	2050044	25.3	967432.2	1	0.996	0.517	0.342	0.809	0.57	1	Si

Verifica di stabilità per pressoflessione SLD §C.4.2.4.1.3.3.2 NTC18

X	Comb.	Sfruttamento	Classe	NEd	NRk	Mx,Ed max	Mx,Rk	My,Ed max	My,Rk	χ,x	χ,y	kxx	kxy	kyx	kyy	χ,LT	Verifica
0	SLD 11	0.113	1	-15719.1	211542.2	62637.6	2050044	13592.2	967432.2	1	0.996	0.398	0.347	0.809	0.578	1	Si

Verifica di stabilità a taglio anima Y §4.2.4.1.2.4 [4.2.27] NTC18

η	hw	tw	hw/tw max	Verifica
1.2	20.6	0.8	55.46	Si

Verifica di stabilità a taglio anima Y SLD §4.2.4.1.2.4 [4.2.27] NTC18

η	hw	tw	hw/tw max	Verifica
1.2	20.6	0.8	55.46	Si

Verifiche a deformabilità

Mensola X: No; Mensola Y: No.

Frecce lungo X

Ascissa freccia	Combinazione	Freccia	Luce	L/f	L/f,min	Tipo	Verifica
32.6	SLE RA 1	0	108.7	10000	250	Totale	Si
61.6	SLE RA 31	0	108.7	10000	250	Totale	Si
61.6	SLE RA 30	0	108.7	10000	250	Totale	Si
61.6	SLE RA 29	0	108.7	10000	250	Totale	Si
61.6	SLE RA 28	0	108.7	10000	250	Totale	Si
61.6	SLE RA 2	0	108.7	10000	350	Variabile	Si
61.6	SLE RA 31	0	108.7	10000	350	Variabile	Si
61.6	SLE RA 30	0	108.7	10000	350	Variabile	Si
61.6	SLE RA 29	0	108.7	10000	350	Variabile	Si
61.6	SLE RA 28	0	108.7	10000	350	Variabile	Si

Frecce lungo Y

Ascissa freccia	Combinazione	Freccia	Luce	L/f	L/f,min	Tipo	Verifica
47.1	SLE RA 1	-0.002	108.7	10000	250	Totale	Si
68.8	SLE RA 31	0.008	108.7	10000	250	Totale	Si
43.5	SLE RA 30	-0.002	108.7	10000	250	Totale	Si
68.8	SLE RA 29	0.007	108.7	10000	250	Totale	Si
47.1	SLE RA 28	-0.002	108.7	10000	250	Totale	Si
61.6	SLE RA 19	0.013	108.7	8503.4	350	Variabile	Si
61.6	SLE RA 18	0.013	108.7	8503.4	350	Variabile	Si

Ascissa freccia	Combinazione	Freccia	Luce	L/f	L/f,min	Tipo	Verifica
61.6	SLE RA 7	0.013	108.7	8532.8	350	Variabile	Si
61.6	SLE RA 6	0.013	108.7	8532.8	350	Variabile	Si
61.6	SLE RA 15	0.013	108.7	8594.5	350	Variabile	Si

Superelemento in acciaio composto dall'asta 78

Caratteristiche del materiale

Acciaio: S275, fyk = 2750

Caratteristiche geometriche

Lunghezza: 74.7
Nodo iniziale: 45 Nodo finale: 79
Cerniera iniziale: No Cerniera finale: No
Sovraresistenza: 0% Sisma Z: No

Caratteristiche della sezione

Sezione	Rotazione	Area	Jx	Jy	ix	iy	Wx	Wy	Wplx	Wply
HEA240	0	76.92	7771.3	2768.96	10.05	6	675.77	230.75	745.47	351.79

Verifiche di resistenza

Verifiche a forza assiale §4.2.4.1.2.1 - §4.2.4.1.2.2 NTC18

X	Comb.	Sfruttamento	Classe	NEd	Nc,Rd	Nt,Rd	Riduzione da taglio	ρx	ρy	Verifica
0	SLU 84	0.348	1	-70037.9	201468.8		1	0	0	Si

Verifiche a forza assiale SLD §4.2.4.1.2.1 - §4.2.4.1.2.2 NTC18

X	Comb.	Sfruttamento	Classe	NEd	Nc,Rd	Nt,Rd	Riduzione da taglio	ρx	ρy	Verifica
0	SLD 13	0.061	1	-12293.3	201468.8		1	0	0	Si

Verifica a taglio X §4.2.4.1.2.4 NTC18

X	Comb.	Sfruttamento	VEd	Vc,Rd	Av	Interazione taglio-torsione	Riduzione torsione	Verifica
0	SLV 6	0.006	-461.2	80842.7	61.47	Considerata	0.87	Si

Verifica a taglio X SLD §4.2.4.1.2.4 NTC18

X	Comb.	Sfruttamento	VEd	Vc,Rd	Av	Interazione taglio-torsione	Riduzione torsione	Verifica
0	SLD 5	0.002	-174.9	88558.5	61.47	Considerata	0.95	Si

Verifica a taglio Y §4.2.4.1.2.4 NTC18

X	Comb.	Sfruttamento	VEd	Vc,Rd	Av	Interazione taglio-torsione	Riduzione torsione	Verifica
74.7	SLU 101	0.065	-2472	38202.6	25.26	Considerata	1	Si

Verifica a taglio Y SLD §4.2.4.1.2.4 NTC18

X	Comb.	Sfruttamento	VEd	Vc,Rd	Av	Interazione taglio-torsione	Riduzione torsione	Verifica
0	SLD 7	0.048	1729.6	36395.3	25.26	Considerata	0.95	Si

Verifica a torsione §4.2.4.1.2.5 NTC18

X	Comb.	Sfruttamento torsione	TEd	TRd	Riduzione taglio resistente	Sfruttamento taglio-torsione	τEd,totale	τRd	Verifica
74.7	SLV 8	0.305	-11722	38489.3	Considerata				Si

Verifica a torsione SLD §4.2.4.1.2.5 NTC18

X	Comb.	Sfruttamento torsione	TEd	TRd	Riduzione taglio resistente	Sfruttamento taglio-torsione	τEd,totale	τRd	Verifica
74.7	SLD 8	0.115	-4444.3	38489.3	Considerata				Si

Verifica a presso/tenso flessione retta X §§ 4.2.4.1.2.3 - 4.2.4.1.2.6 - 4.2.4.1.2.7 - 4.2.4.1.2.8 NTC18

Verifiche eseguite utilizzando la formula conservativa (6.2) §6.2.1 EN 1993-1-1:2005.

X	Comb.	Sfruttamento	Classe	NEd	NRd	Rid. NRd da VEd	Mx,Ed	Mx,Rd	Rid. Mx,Rd da VEd	Rid. Mx,Rd da NEd	ρx	ρy	Verifica
0	SLU 85	0.598	1	-70037.9	201468.8	1	489721	1952423	1		0	0	Si

Verifica a presso/tenso flessione retta X SLD §§ 4.2.4.1.2.3 - 4.2.4.1.2.6 - 4.2.4.1.2.7 - 4.2.4.1.2.8 NTC18

Verifiche eseguite utilizzando la formula conservativa (6.2) §6.2.1 EN 1993-1-1:2005.

X	Comb.	Sfruttamento	Classe	NEd	NRd	Rid. NRd da VEd	Mx,Ed	Mx,Rd	Rid. Mx,Rd da VEd	Rid. Mx,Rd da NEd	ρx	ρy	Verifica
72.2	SLD 1	0.074	1	-8991.5	201468.8	1	56990	1952423	1		0	0	Si

Verifica a presso/tenso flessione deviata §§ 4.2.4.1.2.3 - 4.2.4.1.2.6 - 4.2.4.1.2.7 - 4.2.4.1.2.8 NTC18

Verifiche eseguite utilizzando la formula conservativa (6.2) §6.2.1 EN 1993-1-1:2005.

X	Comb.	Sfruttamento	Classe	NEd	NRd	Rid. NRd da VEd	Mx,Ed	Mx,Rd	My,Ed	My,Rd	Rid. Mx,Rd da VEd	Rid. Mx,Rd da NEd	Rid. My,Rd da VEd	Rid. My,Rd da NEd	α	β	ρx	ρy	Verifica
0	SLV 8	0.127	1	-11896.2	201468.8	1	66582	1952423	-31393	921364	1		1				0	0	Si

Verifica a presso/tenso flessione deviata SLD §§ 4.2.4.1.2.3 - 4.2.4.1.2.6 - 4.2.4.1.2.7 - 4.2.4.1.2.8 NTC18

Verifiche eseguite utilizzando la formula conservativa (6.2) §6.2.1 EN 1993-1-1:2005.

X	Comb.	Sfruttamento	Classe	NEd	NRd	Rid. NRd da VEd	Mx,Ed	Mx,Rd	My,Ed	My,Rd	Rid. Mx,Rd da VEd	Rid. Mx,Rd da NEd	Rid. My,Rd da VEd	Rid. My,Rd da NEd	α	β	ρx	ρy	Verifica
0	SLD 7	0.104	1	-11979.8	201468.8	1	62641	1952423	-11902	921364	1		1				0	0	Si

Verifiche ad instabilità

Caratteristiche iniziali

Membratura principale per controllo snellezza; Calcolo di snellezze ed N critici condotti secondo gli assi principali;
Curva X: b; Curva Y: c; Svergolamento: Carico all'estradosso; Curva svergolamento: b;

Dati per instabilità attorno a x

Numero rit.	Presente	Ascissa	Campata	βx/m	Vincolo a entrambi estremi	λx/m	λVer
1	Si	0					
			1-2	1	Si	7.4	Si, (<200)
2	Si	74.7					

Dati per instabilità attorno a y

Numero rit.	Presente	Ascissa	Campata	βy/n	k,LT	kw,LT	Vincolo a entrambi estremi	λy/n	λVer
1	Si	0							
			1-2	1	1	1	Si	12.5	Si, (<200)
2	Si	74.7							

Verifica di stabilità per pressoflessione §C.4.2.4.1.3.3.2 NTC18

X	Comb.	Sfruttamento	Classe	NEd	NRk	Mx,Ed max	Mx,Rk	My,Ed max	My,Rk	χ,x	χ,y	kxx	kxy	kyx	kyy	χ,LT	Verifica
0	SLU 118	0.581	1	-70037.9	211542.2	515492.8	2050044	26.8	967432.2	1	1	0.882	0.276	0.743	0.459	1	Si

Verifica di stabilità per pressoflessione SLD §C.4.2.4.1.3.3.2 NTC18

X	Comb.	Sfruttamento	Classe	NEd	NRk	Mx,Ed max	Mx,Rk	My,Ed max	My,Rk	χ,x	χ,y	kxx	kxy	kyx	kyy	χ,LT	Verifica
0	SLD 5	0.09	1	-11979.8	211542.2	62641	2050044	11902.4	967432.2	1	1	0.557	0.33	0.743	0.551	1	Si

Verifica di stabilità a taglio anima Y §4.2.4.1.2.4 [4.2.27] NTC18

η	hw	tw	hw/tw max	Verifica
1.2	20.6	0.8	55.46	Si

Verifica di stabilità a taglio anima Y SLD §4.2.4.1.2.4 [4.2.27] NTC18

η	hw	tw	hw/tw max	Verifica
1.2	20.6	0.8	55.46	Si

Verifiche a deformabilità

Mensola X: No; Mensola Y: No.

Frecce lungo X

Ascissa freccia	Combinazione	Freccia	Luce	L/f	L/f,min	Tipo	Verifica
37.4	SLE RA 1	0	74.7	10000	250	Totale	Si
22.4	SLE RA 31	0	74.7	10000	250	Totale	Si
52.3	SLE RA 30	0	74.7	10000	250	Totale	Si
22.4	SLE RA 29	0	74.7	10000	250	Totale	Si
52.3	SLE RA 28	0	74.7	10000	250	Totale	Si
32.4	SLE RA 2	0	74.7	10000	350	Variabile	Si
22.4	SLE RA 31	0	74.7	10000	350	Variabile	Si
52.3	SLE RA 30	0	74.7	10000	350	Variabile	Si
22.4	SLE RA 29	0	74.7	10000	350	Variabile	Si
52.3	SLE RA 28	0	74.7	10000	350	Variabile	Si

Frecce lungo Y

Ascissa freccia	Combinazione	Freccia	Luce	L/f	L/f,min	Tipo	Verifica
37.4	SLE RA 19	0.011	74.7	6626.3	250	Totale	Si
37.4	SLE RA 18	0.011	74.7	6626.3	250	Totale	Si
37.4	SLE RA 7	0.011	74.7	6634	250	Totale	Si
37.4	SLE RA 6	0.011	74.7	6634	250	Totale	Si
37.4	SLE RA 15	0.011	74.7	6691.3	250	Totale	Si
37.4	SLE RA 19	0.012	74.7	6089.7	350	Variabile	Si
37.4	SLE RA 18	0.012	74.7	6089.7	350	Variabile	Si
37.4	SLE RA 7	0.012	74.7	6096.2	350	Variabile	Si
37.4	SLE RA 6	0.012	74.7	6096.2	350	Variabile	Si
37.4	SLE RA 15	0.012	74.7	6144.6	350	Variabile	Si

Superelemento in acciaio composto dall'asta 79

Caratteristiche del materiale

Acciaio: S275, fyk = 2750

Caratteristiche geometriche

Lunghezza: 74.7
Nodo iniziale: 48 Nodo finale: 80
Cerniera iniziale: No Cerniera finale: No
Sovraresistenza: 0% Sisma Z: No

Caratteristiche della sezione

Sezione	Rotazione	Area	Jx	Jy	ix	iy	Wx	Wy	Wplx	Wply
HEA240	0	76.92	7771.3	2768.96	10.05	6	675.77	230.75	745.47	351.79

Verifiche di resistenza

Verifiche a forza assiale §4.2.4.1.2.1 - §4.2.4.1.2.2 NTC18

X	Comb.	Sfruttamento	Classe	NEd	Nc,Rd	Nt,Rd	Riduzione da taglio	ρx	ρy	Verifica
0	SLU 84	0.349	1	-70285	201468.8		1	0	0	Si

Verifiche a forza assiale SLD §4.2.4.1.2.1 - §4.2.4.1.2.2 NTC18

X	Comb.	Sfruttamento	Classe	NEd	Nc,Rd	Nt,Rd	Riduzione da taglio	ρx	ρy	Verifica
0	SLD 1	0.061	1	-12293.3	201468.8		1	0	0	Si

Verifica a taglio X §4.2.4.1.2.4 NTC18

X	Comb.	Sfruttamento	VEd	Vc,Rd	Av	Interazione taglio-torsione	Riduzione torsione	Verifica
0	SLV 9	0.006	461.2	80842.7	61.47	Considerata	0.87	Si

Verifica a taglio X SLD §4.2.4.1.2.4 NTC18

X	Comb.	Sfruttamento	VEd	Vc,Rd	Av	Interazione taglio-torsione	Riduzione torsione	Verifica
0	SLD 9	0.002	174.9	88558.5	61.47	Considerata	0.95	Si

Verifica a taglio Y §4.2.4.1.2.4 NTC18

X	Comb.	Sfruttamento	VEd	Vc,Rd	Av	Interazione taglio-torsione	Riduzione torsione	Verifica
74.7	SLU 117	0.065	-2482.5	38202.6	25.26	Considerata	1	Si

Verifica a taglio Y SLD §4.2.4.1.2.4 NTC18

X	Comb.	Sfruttamento	VEd	Vc,Rd	Av	Interazione taglio-torsione	Riduzione torsione	Verifica
0	SLD 12	0.048	1729.6	36395.3	25.26	Considerata	0.95	Si

Verifica a torsione §4.2.4.1.2.5 NTC18

X	Comb.	Sfruttamento torsione	TEd	TRd	Riduzione taglio resistente	Sfruttamento taglio-torsione	τEd,totale	τRd	Verifica
74.7	SLV 11	0.305	11722	38489.3	Considerata				Si

Verifica a torsione SLD §4.2.4.1.2.5 NTC18

X	Comb.	Sfruttamento torsione	TEd	TRd	Riduzione taglio resistente	Sfruttamento taglio-torsione	τEd,totale	τRd	Verifica
74.7	SLD 11	0.115	4444.3	38489.3	Considerata				Si

Verifica a presso/tenso flessione retta X §§ 4.2.4.1.2.3 - 4.2.4.1.2.6 - 4.2.4.1.2.7 - 4.2.4.1.2.8 NTC18

Verifiche eseguite utilizzando la formula conservativa (6.2) §6.2.1 EN 1993-1-1:2005.

X	Comb.	Sfruttamento	Classe	NEd	NRd	Rid. NRd da VEd	Mx,Ed	Mx,Rd	Rid. Mx,Rd da VEd	Rid. Mx,Rd da NEd	ρx	ρy	Verifica
0	SLU 118	0.6	1	-70285	201468.8	1	490372	1952423	1		0	0	Si

Verifica a presso/tenso flessione retta X SLD §§ 4.2.4.1.2.3 - 4.2.4.1.2.6 - 4.2.4.1.2.7 - 4.2.4.1.2.8 NTC18

Verifiche eseguite utilizzando la formula conservativa (6.2) §6.2.1 EN 1993-1-1:2005.

X	Comb.	Sfruttamento	Classe	NEd	NRd	Rid. NRd da VEd	Mx,Ed	Mx,Rd	Rid. Mx,Rd da VEd	Rid. Mx,Rd da NEd	ρx	ρy	Verifica
72.2	SLD 13	0.074	1	-8991.5	201468.8	1	56990	1952423	1		0	0	Si

Verifica a presso/tenso flessione deviata §§ 4.2.4.1.2.3 - 4.2.4.1.2.6 - 4.2.4.1.2.7 - 4.2.4.1.2.8 NTC18

Verifiche eseguite utilizzando la formula conservativa (6.2) §6.2.1 EN 1993-1-1:2005.

X	Comb.	Sfruttamento	Classe	NEd	NRd	Rid. NRd da VEd	Mx,Ed	Mx,Rd	My,Ed	My,Rd	Rid. Mx,Rd da VEd	Rid. Mx,Rd da NEd	Rid. My,Rd da VEd	Rid. My,Rd da NEd	α	β	ρx	ρy	Verifica
0	SLV 11	0.127	1	-11896.2	201468.8	1	66582	1952423	31393	921364	1		1				0	0	Si

Verifica a presso/tenso flessione deviata SLD §§ 4.2.4.1.2.3 - 4.2.4.1.2.6 - 4.2.4.1.2.7 - 4.2.4.1.2.8 NTC18

Verifiche eseguite utilizzando la formula conservativa (6.2) §6.2.1 EN 1993-1-1:2005.

X	Comb.	Sfruttamento	Classe	NEd	NRd	Rid. NRd da VEd	Mx,Ed	Mx,Rd	My,Ed	My,Rd	Rid. Mx,Rd da VEd	Rid. Mx,Rd da NEd	Rid. My,Rd da VEd	Rid. My,Rd da NEd	α	β	ρx	ρy	Verifica
0	SLD 12	0.104	1	-11979.8	201468.8	1	62641	1952423	11902	921364	1		1				0	0	Si

Verifiche ad instabilità

Caratteristiche iniziali

Membratura principale per controllo snellezza; Calcolo di snellezze ed N critici condotti secondo gli assi principali;
Curva X: b; Curva Y: c; Svergolamento: Carico all'estradosso; Curva svergolamento: b;

Dati per instabilità attorno a x

Numero rit.	Presente	Ascissa	Campata	βx/m	Vincolo a entrambi estremi	λx/m	λVer
1	Si	0					
			1-2	1	Si	7.4	Si, (<200)
2	Si	74.7					

Dati per instabilità attorno a y

Numero rit.	Presente	Ascissa	Campata	βy/n	k,LT	kw,LT	Vincolo a entrambi estremi	λy/n	λVer
1	Si	0							
			1-2	1	1	1	Si	12.5	Si, (<200)
2	Si	74.7							

Verifica di stabilità per pressoflessione §C.4.2.4.1.3.3.2 NTC18

X	Comb.	Sfruttamento	Classe	NEd	NRk	Mx,Ed max	Mx,Rk	My,Ed max	My,Rk	χ,x	χ,y	kxx	kxy	kyx	kyy	χ,LT	Verifica
0	SLU 85	0.583	1	-70285	211542.2	518617	2050044	26.7	967432.2	1	1	0.881	0.275	0.743	0.459	1	Si

Verifica di stabilità per pressoflessione SLD §C.4.2.4.1.3.3.2 NTC18

X	Comb.	Sfruttamento	Classe	NEd	NRk	Mx,Ed max	Mx,Rk	My,Ed max	My,Rk	χ,x	χ,y	kxx	kxy	kyx	kyy	χ,LT	Verifica
0	SLD 10	0.09	1	-11979.8	211542.2	62641	2050044	11902.4	967432.2	1	1	0.557	0.33	0.743	0.551	1	Si

Verifica di stabilità a taglio anima Y §4.2.4.1.2.4 [4.2.27] NTC18

η	hw	tw	hw/tw max	Verifica
1.2	20.6	0.8	55.46	Si

Verifica di stabilità a taglio anima Y SLD §4.2.4.1.2.4 [4.2.27] NTC18

η	hw	tw	hw/tw max	Verifica
1.2	20.6	0.8	55.46	Si

Verifiche a deformabilità

Mensola X: No; Mensola Y: No.

Frecce lungo X

Ascissa freccia	Combinazione	Freccia	Luce	L/f	L/f,min	Tipo	Verifica
37.4	SLE RA 1	0	74.7	10000	250	Totale	Si
22.4	SLE RA 31	0	74.7	10000	250	Totale	Si
52.3	SLE RA 30	0	74.7	10000	250	Totale	Si
22.4	SLE RA 29	0	74.7	10000	250	Totale	Si
49.8	SLE RA 28	0	74.7	10000	250	Totale	Si
32.4	SLE RA 2	0	74.7	10000	350	Variabile	Si
22.4	SLE RA 31	0	74.7	10000	350	Variabile	Si
52.3	SLE RA 30	0	74.7	10000	350	Variabile	Si
22.4	SLE RA 29	0	74.7	10000	350	Variabile	Si
49.8	SLE RA 28	0	74.7	10000	350	Variabile	Si

Frecce lungo Y

Ascissa freccia	Combinazione	Freccia	Luce	L/f	L/f,min	Tipo	Verifica
37.4	SLE RA 19	0.011	74.7	6594.8	250	Totale	Si
37.4	SLE RA 18	0.011	74.7	6594.8	250	Totale	Si
37.4	SLE RA 7	0.011	74.7	6622.2	250	Totale	Si
37.4	SLE RA 6	0.011	74.7	6622.2	250	Totale	Si
37.4	SLE RA 15	0.011	74.7	6671.2	250	Totale	Si
37.4	SLE RA 19	0.012	74.7	6063.1	350	Variabile	Si
37.4	SLE RA 18	0.012	74.7	6063.1	350	Variabile	Si
37.4	SLE RA 7	0.012	74.7	6086.2	350	Variabile	Si
37.4	SLE RA 6	0.012	74.7	6086.2	350	Variabile	Si
37.4	SLE RA 15	0.012	74.7	6127.6	350	Variabile	Si

Superelemento in acciaio composto dall'asta 80

Caratteristiche del materiale

Acciaio: S275, fyk = 2750

Caratteristiche geometriche

Lunghezza: 78.5
Nodo iniziale: 79 Nodo finale: 101
Cerniera iniziale: No Cerniera finale: No
Sovraresistenza: 0% Sisma Z: No

Caratteristiche della sezione

Sezione	Rotazione	Area	Jx	Jy	ix	iy	Wx	Wy	Wplx	Wply
HEA240	0	76.92	7771.3	2768.96	10.05	6	675.77	230.75	745.47	351.79

Verifiche di resistenza

Verifiche a forza assiale §4.2.4.1.2.1 - §4.2.4.1.2.2 NTC18

X	Comb.	Sfruttamento	Classe	NEd	Nc,Rd	Nt,Rd	Riduzione da taglio	ρx	ρy	Verifica
0	SLU 84	0.326	1	-65631.5	201468.8		1	0	0	Si

Verifiche a forza assiale SLD §4.2.4.1.2.1 - §4.2.4.1.2.2 NTC18

X	Comb.	Sfruttamento	Classe	NEd	Nc,Rd	Nt,Rd	Riduzione da taglio	ρx	ρy	Verifica
0	SLD 13	0.046	1	-9356.4	201468.8		1	0	0	Si

Verifica a taglio X §4.2.4.1.2.4 NTC18

X	Comb.	Sfruttamento	VEd	Vc,Rd	Av	Interazione taglio-torsione	Riduzione torsione	Verifica
0	SLV 6	0.004	-345.2	83194.2	61.47	Considerata	0.89	Si

Verifica a taglio X SLD §4.2.4.1.2.4 NTC18

X	Comb.	Sfruttamento	VEd	Vc,Rd	Av	Interazione taglio-torsione	Riduzione torsione	Verifica
0	SLD 5	0.001	-130.9	89380.4	61.47	Considerata	0.96	Si

Verifica a taglio Y §4.2.4.1.2.4 NTC18

X	Comb.	Sfruttamento	VEd	Vc,Rd	Av	Interazione taglio-torsione	Riduzione torsione	Verifica
0	SLU 118	0.366	13995.7	38202.6	25.26	Considerata	1	Si

Verifica a taglio Y SLD §4.2.4.1.2.4 NTC18

X	Comb.	Sfruttamento	VEd	Vc,Rd	Av	Interazione taglio-torsione	Riduzione torsione	Verifica
0	SLD 3	0.053	1996.2	37767.7	25.26	Considerata	0.99	Si

Verifica a torsione §4.2.4.1.2.5 NTC18

X	Comb.	Sfruttamento torsione	TEd	TRd	Riduzione taglio resistente	Sfruttamento taglio-torsione	τEd,totale	τRd	Verifica
41.8	SLV 9	0.249	9574.3	38489.3	Considerata				Si

Verifica a torsione SLD §4.2.4.1.2.5 NTC18

X	Comb.	Sfruttamento torsione	TEd	TRd	Riduzione taglio resistente	Sfruttamento taglio-torsione	τEd,totale	τRd	Verifica
41.8	SLD 9	0.094	3630	38489.3	Considerata				Si

Verifica a presso/tenso flessione retta X §§ 4.2.4.1.2.3 - 4.2.4.1.2.6 - 4.2.4.1.2.7 - 4.2.4.1.2.8 NTC18

Verifiche eseguite utilizzando la formula conservativa (6.2) §6.2.1 EN 1993-1-1:2005.

X	Comb.	Sfruttamento	Classe	NEd	NRd	Rid. NRd da VEd	Mx,Ed	Mx,Rd	Rid. Mx,Rd da VEd	Rid. Mx,Rd da NEd	ρx	ρy	Verifica
0	SLU 84	0.59	1	-65631.5	201468.8	1	515493	1952423	1		0	0	Si

Verifica a presso/tenso flessione retta Y §§ 4.2.4.1.2.3 - 4.2.4.1.2.6 - 4.2.4.1.2.7 - 4.2.4.1.2.8 NTC18

Verifiche eseguite utilizzando la formula conservativa (6.2) §6.2.1 EN 1993-1-1:2005.

X	Comb.	Sfruttamento	Classe	NEd	NRd	Rid. NRd da VEd	My,Ed	My,Rd	Rid. My,Rd da VEd	Rid. My,Rd da NEd	ρx	ρy	Verifica
34	SLV 9	0.064	1	-8786.6	201468.8	1	-19236	921364	1		0	0	Si

Verifica a presso/tenso flessione retta Y SLD §§ 4.2.4.1.2.3 - 4.2.4.1.2.6 - 4.2.4.1.2.7 - 4.2.4.1.2.8 NTC18

Verifiche eseguite utilizzando la formula conservativa (6.2) §6.2.1 EN 1993-1-1:2005.

X	Comb.	Sfruttamento	Classe	NEd	NRd	Rid. NRd da VEd	My,Ed	My,Rd	Rid. My,Rd da VEd	Rid. My,Rd da NEd	ρx	ρy	Verifica
36.6	SLD 9	0.051	1	-8576	201468.8	1	-7635	921364	1		0	0	Si

Verifica a presso/tenso flessione deviata §§ 4.2.4.1.2.3 - 4.2.4.1.2.6 - 4.2.4.1.2.7 - 4.2.4.1.2.8 NTC18

Verifiche eseguite utilizzando la formula conservativa (6.2) §6.2.1 EN 1993-1-1:2005.

X	Comb.	Sfruttamento	Classe	NEd	NRd	Rid. NRd da VEd	Mx,Ed	Mx,Rd	My,Ed	My,Rd	Rid. Mx,Rd da VEd	Rid. Mx,Rd da NEd	Rid. My,Rd da VEd	Rid. My,Rd da NEd	α	β	ρx	ρy	Verifica
78.5	SLV 9	0.085	1	-8283.2	201468.8	1	-12468	1952423	-34584	921364	1		1				0	0	Si

Verifica a presso/tenso flessione deviata SLD §§ 4.2.4.1.2.3 - 4.2.4.1.2.6 - 4.2.4.1.2.7 - 4.2.4.1.2.8 NTC18

Verifiche eseguite utilizzando la formula conservativa (6.2) §6.2.1 EN 1993-1-1:2005.

X	Comb.	Sfruttamento	Classe	NEd	NRd	Rid. NRd da VEd	Mx,Ed	Mx,Rd	My,Ed	My,Rd	Rid. Mx,Rd da VEd	Rid. Mx,Rd da NEd	Rid. My,Rd da VEd	Rid. My,Rd da NEd	α	β	ρx	ρy	Verifica
0	SLD 7	0.074	1	-8677.1	201468.8	1	54359	1952423	2843	921364	1		1				0	0	Si

Verifiche ad instabilità

Caratteristiche iniziali

Membratura principale per controllo snellezza; Calcolo di snellezze ed N critici condotti secondo gli assi principali;
Curva X: b; Curva Y: c; Svergolamento: Carico all'estradosso; Curva svergolamento: b;

Dati per instabilità attorno a x

Numero rit.	Presente	Ascissa	Campata	βx/m	Vincolo a entrambi estremi	λx/m	λVer
1	Si	0					
			1-2	1	Si	7.8	Si, (<200)
2	Si	78.5					

Dati per instabilità attorno a y

Numero rit.	Presente	Ascissa	Campata	βy/n	k,LT	kw,LT	Vincolo a entrambi estremi	λy/n	λVer
1	Si	0							
			1-2	1	1	1	Si	13.1	Si, (<200)
2	Si	78.5							

Verifica di stabilità per pressoflessione §C.4.2.4.1.3.3.2 NTC18

X	Comb.	Sfruttamento	Classe	NEd	NRk	Mx,Ed max	Mx,Rk	My,Ed max	My,Rk	χ,x	χ,y	kxx	kxy	kyx	kyy	χ,LT	Verifica
0	SLU 84	0.524	1	-65631.5	211542.2	515492.9	2050044	6.3	967432.2	1	1	0.386	0.245	0.751	0.408	1	Si

Verifica di stabilità per pressoflessione SLD §C.4.2.4.1.3.3.2 NTC18

X	Comb.	Sfruttamento	Classe	NEd	NRk	Mx,Ed max	Mx,Rk	My,Ed max	My,Rk	χ,x	χ,y	kxx	kxy	kyx	kyy	χ,LT	Verifica
0	SLD 8	0.074	1	-8677.1	211542.2	54358.7	2050044	13112.2	967432.2	1	1	0.398	0.407	0.751	0.678	1	Si

Verifica di stabilità a taglio anima Y §4.2.4.1.2.4 [4.2.27] NTC18

η	hw	tw	hw/tw max	Verifica
1.2	20.6	0.8	55.46	Si

Verifica di stabilità a taglio anima Y SLD §4.2.4.1.2.4 [4.2.27] NTC18

η	hw	tw	hw/tw max	Verifica
1.2	20.6	0.8	55.46	Si

Verifiche a deformabilità

Mensola X: No; Mensola Y: No.

Frecce lungo X

Ascissa freccia	Combinazione	Freccia	Luce	L/f	L/f,min	Tipo	Verifica
15.7	SLE RA 1	0	78.5	10000	250	Totale	Si
28.8	SLE RA 31	0	78.5	10000	250	Totale	Si
28.8	SLE RA 30	0	78.5	10000	250	Totale	Si
28.8	SLE RA 29	0	78.5	10000	250	Totale	Si
28.8	SLE RA 28	0	78.5	10000	250	Totale	Si
34	SLE RA 2	0	78.5	10000	350	Variabile	Si
28.8	SLE RA 31	0	78.5	10000	350	Variabile	Si
28.8	SLE RA 30	0	78.5	10000	350	Variabile	Si
28.8	SLE RA 29	0	78.5	10000	350	Variabile	Si
28.8	SLE RA 28	0	78.5	10000	350	Variabile	Si

Frecce lungo Y

Ascissa freccia	Combinazione	Freccia	Luce	L/f	L/f,min	Tipo	Verifica
44.5	SLE RA 1	-0.002	78.5	10000	250	Totale	Si
57.5	SLE RA 31	-0.003	78.5	10000	250	Totale	Si
44.5	SLE RA 30	-0.002	78.5	10000	250	Totale	Si
57.5	SLE RA 29	-0.003	78.5	10000	250	Totale	Si
44.5	SLE RA 28	-0.002	78.5	10000	250	Totale	Si
62.8	SLE RA 2	-0.002	78.5	10000	350	Variabile	Si
60.2	SLE RA 31	-0.001	78.5	10000	350	Variabile	Si
54.9	SLE RA 30	0	78.5	10000	350	Variabile	Si
62.8	SLE RA 29	-0.001	78.5	10000	350	Variabile	Si
41.8	SLE RA 28	0	78.5	10000	350	Variabile	Si

Superelemento in acciaio composto dall'asta 81

Caratteristiche del materiale

Acciaio: S275, fyk = 2750

Caratteristiche geometriche

Lunghezza: 78.5
Nodo iniziale: 80 Nodo finale: 102
Cerniera iniziale: No Cerniera finale: No
Sovraresistenza: 0% Sisma Z: No

Caratteristiche della sezione

Sezione	Rotazione	Area	Jx	Jy	ix	iy	Wx	Wy	Wplx	Wply
HEA240	0	76.92	7771.3	2768.96	10.05	6	675.77	230.75	745.47	351.79

Verifiche di resistenza

Verifiche a forza assiale §4.2.4.1.2.1 - §4.2.4.1.2.2 NTC18

X	Comb.	Sfruttamento	Classe	NEd	Nc,Rd	Nt,Rd	Riduzione da taglio	ρx	ρy	Verifica
0	SLU 84	0.327	1	-65835.5	201468.8		1	0	0	Si

Verifiche a forza assiale SLD §4.2.4.1.2.1 - §4.2.4.1.2.2 NTC18

X	Comb.	Sfruttamento	Classe	NEd	Nc,Rd	Nt,Rd	Riduzione da taglio	ρx	ρy	Verifica
0	SLD 1	0.046	1	-9356.4	201468.8		1	0	0	Si

Verifica a taglio X §4.2.4.1.2.4 NTC18

X	Comb.	Sfruttamento	VEd	Vc,Rd	Av	Interazione taglio-torsione	Riduzione torsione	Verifica
0	SLV 9	0.004	345.2	83194.2	61.47	Considerata	0.89	Si

Verifica a taglio X SLD §4.2.4.1.2.4 NTC18

X	Comb.	Sfruttamento	VEd	Vc,Rd	Av	Interazione taglio-torsione	Riduzione torsione	Verifica
0	SLD 9	0.001	130.9	89380.4	61.47	Considerata	0.96	Si

Verifica a taglio Y §4.2.4.1.2.4 NTC18

X	Comb.	Sfruttamento	VEd	Vc,Rd	Av	Interazione taglio-torsione	Riduzione torsione	Verifica
0	SLU 118	0.369	14108.9	38202.6	25.26	Considerata	1	Si

Verifica a taglio Y SLD §4.2.4.1.2.4 NTC18

X	Comb.	Sfruttamento	VEd	Vc,Rd	Av	Interazione taglio-torsione	Riduzione torsione	Verifica
0	SLD 16	0.053	1996.2	37767.7	25.26	Considerata	0.99	Si

Verifica a torsione §4.2.4.1.2.5 NTC18

X	Comb.	Sfruttamento torsione	TEd	TRd	Riduzione taglio resistente	Sfruttamento taglio-torsione	τEd,totale	τRd	Verifica
0	SLV 5	0.249	-9574.3	38489.3	Considerata				Si

Verifica a torsione SLD §4.2.4.1.2.5 NTC18

X	Comb.	Sfruttamento torsione	TEd	TRd	Riduzione taglio resistente	Sfruttamento taglio-torsione	τEd,totale	τRd	Verifica
0	SLD 5	0.094	-3630	38489.3	Considerata				Si

Verifica a presso/tenso flessione retta X §§ 4.2.4.1.2.3 - 4.2.4.1.2.6 - 4.2.4.1.2.7 - 4.2.4.1.2.8 NTC18

Verifiche eseguite utilizzando la formula conservativa (6.2) §6.2.1 EN 1993-1-1:2005.

X	Comb.	Sfruttamento	Classe	NEd	NRd	Rid. NRd da VEd	Mx,Ed	Mx,Rd	Rid. Mx,Rd da VEd	Rid. Mx,Rd da NEd	ρx	ρy	Verifica
0	SLU 117	0.592	1	-65835.5	201468.8	1	518618	1952423	1		0	0	Si

Verifica a presso/tenso flessione retta Y §§ 4.2.4.1.2.3 - 4.2.4.1.2.6 - 4.2.4.1.2.7 - 4.2.4.1.2.8 NTC18

Verifiche eseguite utilizzando la formula conservativa (6.2) §6.2.1 EN 1993-1-1:2005.

X	Comb.	Sfruttamento	Classe	NEd	NRd	Rid. NRd da VEd	My,Ed	My,Rd	Rid. My,Rd da VEd	Rid. My,Rd da NEd	ρx	ρy	Verifica
34	SLV 5	0.064	1	-8786.6	201468.8	1	19236	921364	1		0	0	Si

Verifica a presso/tenso flessione retta Y SLD §§ 4.2.4.1.2.3 - 4.2.4.1.2.6 - 4.2.4.1.2.7 - 4.2.4.1.2.8 NTC18

Verifiche eseguite utilizzando la formula conservativa (6.2) §6.2.1 EN 1993-1-1:2005.

X	Comb.	Sfruttamento	Classe	NEd	NRd	Rid. NRd da VEd	My,Ed	My,Rd	Rid. My,Rd da VEd	Rid. My,Rd da NEd	ρx	ρy	Verifica
36.6	SLD 5	0.051	1	-8576	201468.8	1	7635	921364	1		0	0	Si

Verifica a presso/tenso flessione deviata §§ 4.2.4.1.2.3 - 4.2.4.1.2.6 - 4.2.4.1.2.7 - 4.2.4.1.2.8 NTC18

Verifiche eseguite utilizzando la formula conservativa (6.2) §6.2.1 EN 1993-1-1:2005.

X	Comb.	Sfruttamento	Classe	NEd	NRd	Rid. NRd da VEd	Mx,Ed	Mx,Rd	My,Ed	My,Rd	Rid. Mx,Rd da VEd	Rid. Mx,Rd da NEd	Rid. My,Rd da VEd	Rid. My,Rd da NEd	α	β	ρx	ρy	Verifica
78.5	SLV 6	0.085	1	-8283.2	201468.8	1	-12468	1952423	34584	921364	1		1				0	0	Si

Verifica a presso/tenso flessione deviata SLD §§ 4.2.4.1.2.3 - 4.2.4.1.2.6 - 4.2.4.1.2.7 - 4.2.4.1.2.8 NTC18

Verifiche eseguite utilizzando la formula conservativa (6.2) §6.2.1 EN 1993-1-1:2005.

X	Comb.	Sfruttamento	Classe	NEd	NRd	Rid. NRd da VEd	Mx,Ed	Mx,Rd	My,Ed	My,Rd	Rid. Mx,Rd da VEd	Rid. Mx,Rd da NEd	Rid. My,Rd da VEd	Rid. My,Rd da NEd	α	β	ρx	ρy	Verifica
0	SLD 11	0.074	1	-8677.1	201468.8	1	54359	1952423	-2843	921364	1		1				0	0	Si

Verifiche ad instabilità

Caratteristiche iniziali

Membratura principale per controllo snellezza; Calcolo di snellezze ed N critici condotti secondo gli assi principali;
Curva X: b; Curva Y: c; Svergolamento: Carico all'estradosso; Curva svergolamento: b;

Dati per instabilità attorno a x

Numero rit.	Presente	Ascissa	Campata	βx/m	Vincolo a entrambi estremi	λx/m	λVer
1	Si	0					
			1-2	1	Si	7.8	Si, (<200)
2	Si	78.5					

Dati per instabilità attorno a y

Numero rit.	Presente	Ascissa	Campata	βy/n	k,LT	kw,LT	Vincolo a entrambi estremi	λy/n	λVer
1	Si	0							
			1-2	1	1	1	Si	13.1	Si, (<200)
2	Si	78.5							

Verifica di stabilità per pressoflessione §C.4.2.4.1.3.3.2 NTC18

X	Comb.	Sfruttamento	Classe	NEd	NRk	Mx,Ed max	Mx,Rk	My,Ed max	My,Rk	χ,x	χ,y	kxx	kxy	kyx	kyy	χ,LT	Verifica
0	SLU 117	0.526	1	-65835.5	211542.2	518618.4	2050044	6.4	967432.2	1	1	0.386	0.245	0.751	0.408	1	Si

Verifica di stabilità per pressoflessione SLD §C.4.2.4.1.3.3.2 NTC18

X	Comb.	Sfruttamento	Classe	NEd	NRk	Mx,Ed max	Mx,Rk	My,Ed max	My,Rk	χ,x	χ,y	kxx	kxy	kyx	kyy	χ,LT	Verifica
0	SLD 11	0.074	1	-8677.1	211542.2	54358.7	2050044	13112.2	967432.2	1	1	0.398	0.407	0.751	0.678	1	Si

Verifica di stabilità a taglio anima Y §4.2.4.1.2.4 [4.2.27] NTC18

η	hw	tw	hw/tw max	Verifica
1.2	20.6	0.8	55.46	Si

Verifica di stabilità a taglio anima Y SLD §4.2.4.1.2.4 [4.2.27] NTC18

η	hw	tw	hw/tw max	Verifica
1.2	20.6	0.8	55.46	Si

Verifiche a deformabilità

Mensola X: No; Mensola Y: No.

Frecce lungo X

Ascissa freccia	Combinazione	Freccia	Luce	L/f	L/f,min	Tipo	Verifica
15.7	SLE RA 1	0	78.5	10000	250	Totale	Si
28.8	SLE RA 31	0	78.5	10000	250	Totale	Si
28.8	SLE RA 30	0	78.5	10000	250	Totale	Si
28.8	SLE RA 29	0	78.5	10000	250	Totale	Si
28.8	SLE RA 28	0	78.5	10000	250	Totale	Si
34	SLE RA 2	0	78.5	10000	350	Variabile	Si
28.8	SLE RA 31	0	78.5	10000	350	Variabile	Si
28.8	SLE RA 30	0	78.5	10000	350	Variabile	Si
28.8	SLE RA 29	0	78.5	10000	350	Variabile	Si
28.8	SLE RA 28	0	78.5	10000	350	Variabile	Si

Frecce lungo Y

Ascissa freccia	Combinazione	Freccia	Luce	L/f	L/f,min	Tipo	Verifica
44.5	SLE RA 1	-0.002	78.5	10000	250	Totale	Si
57.5	SLE RA 31	-0.003	78.5	10000	250	Totale	Si
44.5	SLE RA 30	-0.002	78.5	10000	250	Totale	Si
57.5	SLE RA 29	-0.003	78.5	10000	250	Totale	Si
44.5	SLE RA 28	-0.002	78.5	10000	250	Totale	Si
62.8	SLE RA 2	-0.002	78.5	10000	350	Variabile	Si
60.2	SLE RA 31	-0.002	78.5	10000	350	Variabile	Si
54.9	SLE RA 30	0	78.5	10000	350	Variabile	Si

Ascissa freccia	Combinazione	Freccia	Luce	L/f	L/f,min	Tipo	Verifica
60.2	SLE RA 29	-0.001	78.5	10000	350	Variabile	Si
52.3	SLE RA 28	0	78.5	10000	350	Variabile	Si

Superelemento in acciaio composto dall'asta 82

Caratteristiche del materiale

Acciaio: S275, fyk = 2750

Caratteristiche geometriche

Lunghezza: 170.7
Nodo iniziale: 102 Nodo finale: 118
Cerniera iniziale: No Cerniera finale: No
Sovraresistenza: 0% Sisma Z: No

Caratteristiche della sezione

Sezione	Rotazione	Area	Jx	Jy	ix	iy	Wx	Wy	Wplx	Wply
HEA240	0	76.92	7771.3	2768.96	10.05	6	675.77	230.75	745.47	351.79

Verifiche di resistenza

Verifiche a forza assiale §4.2.4.1.2.1 - §4.2.4.1.2.2 NTC18

X	Comb.	Sfruttamento	Classe	NEd	Nc,Rd	Nt,Rd	Riduzione da taglio	ρx	ρy	Verifica
0	SLU 117	0.277	1	-55769.5	201468.8		1	0	0	Si

Verifiche a forza assiale SLD §4.2.4.1.2.1 - §4.2.4.1.2.2 NTC18

X	Comb.	Sfruttamento	Classe	NEd	Nc,Rd	Nt,Rd	Riduzione da taglio	ρx	ρy	Verifica
0	SLD 1	0.042	1	-8530.5	201468.8		1	0	0	Si

Verifica a taglio X §4.2.4.1.2.4 NTC18

X	Comb.	Sfruttamento	VEd	Vc,Rd	Av	Interazione taglio-torsione	Riduzione torsione	Verifica
170.7	SLV 8	0.003	-296.4	92789.1	61.47	Considerata	1	Si

Verifica a taglio X SLD §4.2.4.1.2.4 NTC18

X	Comb.	Sfruttamento	VEd	Vc,Rd	Av	Interazione taglio-torsione	Riduzione torsione	Verifica
170.7	SLD 8	0.001	-112.4	92892.7	61.47	Considerata	1	Si

Verifica a taglio Y §4.2.4.1.2.4 NTC18

X	Comb.	Sfruttamento	VEd	Vc,Rd	Av	Interazione taglio-torsione	Riduzione torsione	Verifica
170.7	SLU 85	0.179	-6845.3	38202.6	25.26	Considerata	1	Si

Verifica a taglio Y SLD §4.2.4.1.2.4 NTC18

X	Comb.	Sfruttamento	VEd	Vc,Rd	Av	Interazione taglio-torsione	Riduzione torsione	Verifica
170.7	SLD 2	0.081	-3112.3	38202.6	25.26	Considerata	1	Si

Verifica a torsione §4.2.4.1.2.5 NTC18

X	Comb.	Sfruttamento torsione	TEd	TRd	Riduzione taglio resistente	Sfruttamento taglio-torsione	τEd,totale	τRd	Verifica
170.7	SLV 11	0.004	-172.6	38489.3	Considerata				Si

Verifica a torsione SLD §4.2.4.1.2.5 NTC18

X	Comb.	Sfruttamento torsione	TEd	TRd	Riduzione taglio resistente	Sfruttamento taglio-torsione	τEd,totale	τRd	Verifica
170.7	SLD 12	0.002	-65.4	38489.3	Considerata				Si

Verifica a presso/tenso flessione retta X §§ 4.2.4.1.2.3 - 4.2.4.1.2.6 - 4.2.4.1.2.7 - 4.2.4.1.2.8 NTC18

Verifiche eseguite utilizzando la formula conservativa (6.2) §6.2.1 EN 1993-1-1:2005.

X	Comb.	Sfruttamento	Classe	NEd	NRd	Rid. NRd da VEd	Mx,Ed	Mx,Rd	Rid. Mx,Rd da VEd	Rid. Mx,Rd da NEd	ρx	ρy	Verifica
0	SLU 118	0.522	1	-55769.5	201468.8	1	-478890	1952423	1		0	0	Si

Verifica a presso/tenso flessione retta Y §§ 4.2.4.1.2.3 - 4.2.4.1.2.6 - 4.2.4.1.2.7 - 4.2.4.1.2.8 NTC18

Verifiche eseguite utilizzando la formula conservativa (6.2) §6.2.1 EN 1993-1-1:2005.

X	Comb.	Sfruttamento	Classe	NEd	NRd	Rid. NRd da VEd	My,Ed	My,Rd	Rid. My,Rd da VEd	Rid. My,Rd da NEd	ρx	ρy	Verifica
130.9	SLV 15	0.052	1	-5483	201468.8	1	-22400	921364	1		0	0	Si

Verifica a presso/tenso flessione deviata §§ 4.2.4.1.2.3 - 4.2.4.1.2.6 - 4.2.4.1.2.7 - 4.2.4.1.2.8 NTC18

Verifiche eseguite utilizzando la formula conservativa (6.2) §6.2.1 EN 1993-1-1:2005.

X	Comb.	Sfruttamento	Classe	NEd	NRd	Rid. NRd da VEd	Mx,Ed	Mx,Rd	My,Ed	My,Rd	Rid. Mx,Rd da VEd	Rid. Mx,Rd da NEd	Rid. My,Rd da VEd	Rid. My,Rd da NEd	α	β	ρx	ρy	Verifica
170.7	SLV 5	0.182	1	-7658.7	201468.8	1	98236	1952423	86471	921364	1		1				0	0	Si

Verifica a presso/tenso flessione deviata SLD §§ 4.2.4.1.2.3 - 4.2.4.1.2.6 - 4.2.4.1.2.7 - 4.2.4.1.2.8 NTC18

Verifiche eseguite utilizzando la formula conservativa (6.2) §6.2.1 EN 1993-1-1:2005.

X	Comb.	Sfruttamento	Classe	NEd	NRd	Rid. NRd da VEd	Mx,Ed	Mx,Rd	My,Ed	My,Rd	Rid. Mx,Rd da VEd	Rid. Mx,Rd da NEd	Rid. My,Rd da VEd	Rid. My,Rd da NEd	α	β	ρx	ρy	Verifica
170.7	SLD 6	0.123	1	-7372.9	201468.8	1	98568	1952423	32785	921364	1		1				0	0	Si

Verifiche ad instabilità

Caratteristiche iniziali

Membratura principale per controllo snellezza; Calcolo di snellezze ed N critici condotti secondo gli assi principali;
Curva X: b; Curva Y: c; Svergolamento: Carico all'estradosso; Curva svergolamento: b;

Dati per instabilità attorno a x

Numero rit.	Presente	Ascissa	Campata	βx/m	Vincolo a entrambi estremi	λx/m	λVer
1	Si	0					
			1-2	1	Si	17	Si, (<200)
2	Si	170.7					

Dati per instabilità attorno a y

Numero rit.	Presente	Ascissa	Campata	βy/n	k,LT	kw,LT	Vincolo a entrambi estremi	λy/n	λVer
1	Si	0							
			1-2	1	1	1	Si	28.4	Si, (<200)
2	Si	170.7							

Verifica di stabilità per pressoflessione §C.4.2.4.1.3.3.2 NTC18

X	Comb.	Sfruttamento	Classe	NEd	NRk	Mx,Ed max	Mx,Rk	My,Ed max	My,Rk	χ,x	χ,y	kxx	kxy	kyx	kyy	χ,LT	Verifica
0	SLU 84	0.524	1	-55769.5	211542.2	478889.6	2050044	2.4	967432.2	1	0.935	0.707	0.584	0.928	0.974	1	Si

Verifica di stabilità per pressoflessione SLD §C.4.2.4.1.3.3.2 NTC18

X	Comb.	Sfruttamento	Classe	NEd	NRk	Mx,Ed max	Mx,Rk	My,Ed max	My,Rk	χ,x	χ,y	kxx	kxy	kyx	kyy	χ,LT	Verifica
0	SLD 5	0.116	1	-7953	211542.2	98568.3	2050044	32784.9	967432.2	1	0.935	0.614	0.461	0.928	0.768	1	Si

Verifica di stabilità a taglio anima Y §4.2.4.1.2.4 [4.2.27] NTC18

η	hw	tw	hw/tw max	Verifica
1.2	20.6	0.8	55.46	Si

Verifica di stabilità a taglio anima Y SLD §4.2.4.1.2.4 [4.2.27] NTC18

η	hw	tw	hw/tw max	Verifica
1.2	20.6	0.8	55.46	Si

Verifiche a deformabilità

Mensola X: No; Mensola Y: No.

Frecce lungo X

Ascissa freccia	Combinazione	Freccia	Luce	L/f	L/f,min	Tipo	Verifica
74	SLE RA 1	0	170.7	10000	250	Totale	Si
79.6	SLE RA 31	0	170.7	10000	250	Totale	Si
79.6	SLE RA 30	0	170.7	10000	250	Totale	Si
79.6	SLE RA 29	0	170.7	10000	250	Totale	Si
79.6	SLE RA 28	0	170.7	10000	250	Totale	Si
96.7	SLE RA 2	0	170.7	10000	350	Variabile	Si
79.6	SLE RA 31	0	170.7	10000	350	Variabile	Si
79.6	SLE RA 30	0	170.7	10000	350	Variabile	Si
79.6	SLE RA 29	0	170.7	10000	350	Variabile	Si
79.6	SLE RA 28	0	170.7	10000	350	Variabile	Si

Frecce lungo Y

Ascissa freccia	Combinazione	Freccia	Luce	L/f	L/f,min	Tipo	Verifica
74	SLE RA 19	-0.052	170.7	3273.2	250	Totale	Si
74	SLE RA 18	-0.052	170.7	3273.2	250	Totale	Si
74	SLE RA 7	-0.052	170.7	3285.7	250	Totale	Si
74	SLE RA 6	-0.052	170.7	3285.7	250	Totale	Si
74	SLE RA 15	-0.052	170.7	3298.5	250	Totale	Si
74	SLE RA 19	-0.034	170.7	4984.4	350	Variabile	Si
74	SLE RA 18	-0.034	170.7	4984.4	350	Variabile	Si
74	SLE RA 7	-0.034	170.7	5013.6	350	Variabile	Si
74	SLE RA 6	-0.034	170.7	5013.6	350	Variabile	Si
74	SLE RA 15	-0.034	170.7	5043.4	350	Variabile	Si

Superelemento in acciaio composto dall'asta 83

Caratteristiche del materiale

Acciaio: S275, fyk = 2750

Caratteristiche geometriche

Lunghezza: 170.7
Nodo iniziale: 101 Nodo finale: 118
Cerniera iniziale: No Cerniera finale: No
Sovraresistenza: 0% Sisma Z: No

Caratteristiche della sezione

Sezione	Rotazione	Area	Jx	Jy	ix	iy	Wx	Wy	Wplx	Wply
HEA240	0	76.92	7771.3	2768.96	10.05	6	675.77	230.75	745.47	351.79

Verifiche di resistenza

Verifiche a forza assiale §4.2.4.1.2.1 - §4.2.4.1.2.2 NTC18

X	Comb.	Sfruttamento	Classe	NEd	Nc,Rd	Nt,Rd	Riduzione da taglio	ρx	ρy	Verifica
0	SLU 117	0.276	1	-55627.9	201468.8		1	0	0	Si

Verifiche a forza assiale SLD §4.2.4.1.2.1 - §4.2.4.1.2.2 NTC18

X	Comb.	Sfruttamento	Classe	NEd	Nc,Rd	Nt,Rd	Riduzione da taglio	ρx	ρy	Verifica
0	SLD 14	0.042	1	-8530.5	201468.8		1	0	0	Si

Verifica a taglio X §4.2.4.1.2.4 NTC18

X	Comb.	Sfruttamento	VEd	Vc,Rd	Av	Interazione taglio-torsione	Riduzione torsione	Verifica
170.7	SLV 11	0.003	296.4	92789.1	61.47	Considerata	1	Si

Verifica a taglio X SLD §4.2.4.1.2.4 NTC18

X	Comb.	Sfruttamento	VEd	Vc,Rd	Av	Interazione taglio-torsione	Riduzione torsione	Verifica
170.7	SLD 12	0.001	112.4	92892.7	61.47	Considerata	1	Si

Verifica a taglio Y §4.2.4.1.2.4 NTC18

X	Comb.	Sfruttamento	VEd	Vc,Rd	Av	Interazione taglio-torsione	Riduzione torsione	Verifica
170.7	SLU 85	0.178	-6806.1	38202.6	25.26	Considerata	1	Si

Verifica a taglio Y SLD §4.2.4.1.2.4 NTC18

X	Comb.	Sfruttamento	VEd	Vc,Rd	Av	Interazione taglio-torsione	Riduzione torsione	Verifica
170.7	SLD 14	0.081	-3112.3	38202.6	25.26	Considerata	1	Si

Verifica a torsione §4.2.4.1.2.5 NTC18

X	Comb.	Sfruttamento torsione	TEd	TRd	Riduzione taglio resistente	Sfruttamento taglio-torsione	τEd,totale	τRd	Verifica
170.7	SLV 8	0.004	172.6	38489.3	Considerata				Si

Verifica a torsione SLD §4.2.4.1.2.5 NTC18

X	Comb.	Sfruttamento torsione	TEd	TRd	Riduzione taglio resistente	Sfruttamento taglio-torsione	τEd,totale	τRd	Verifica
170.7	SLD 8	0.002	65.4	38489.3	Considerata				Si

Verifica a presso/tenso flessione retta X §§ 4.2.4.1.2.3 - 4.2.4.1.2.6 - 4.2.4.1.2.7 - 4.2.4.1.2.8 NTC18

Verifiche eseguite utilizzando la formula conservativa (6.2) §6.2.1 EN 1993-1-1:2005.

X	Comb.	Sfruttamento	Classe	NEd	NRd	Rid. NRd da VEd	Mx,Ed	Mx,Rd	Rid. Mx,Rd da VEd	Rid. Mx,Rd da NEd	ρx	ρy	Verifica
0	SLU 85	0.518	1	-55627.9	201468.8	1	-473138	1952423	1		0	0	Si

Verifica a presso/tenso flessione retta Y §§ 4.2.4.1.2.3 - 4.2.4.1.2.6 - 4.2.4.1.2.7 - 4.2.4.1.2.8 NTC18

Verifiche eseguite utilizzando la formula conservativa (6.2) §6.2.1 EN 1993-1-1:2005.

X	Comb.	Sfruttamento	Classe	NEd	NRd	Rid. NRd da VEd	My,Ed	My,Rd	Rid. My,Rd da VEd	Rid. My,Rd da NEd	ρx	ρy	Verifica
130.9	SLV 3	0.052	1	-5483	201468.8	1	22400	921364	1		0	0	Si

Verifica a presso/tenso flessione deviata §§ 4.2.4.1.2.3 - 4.2.4.1.2.6 - 4.2.4.1.2.7 - 4.2.4.1.2.8 NTC18

Verifiche eseguite utilizzando la formula conservativa (6.2) §6.2.1 EN 1993-1-1:2005.

X	Comb.	Sfruttamento	Classe	NEd	NRd	Rid. NRd da VEd	Mx,Ed	Mx,Rd	My,Ed	My,Rd	Rid. Mx,Rd da VEd	Rid. Mx,Rd da NEd	Rid. My,Rd da VEd	Rid. My,Rd da NEd	α	β	ρx	ρy	Verifica
170.7	SLV 9	0.182	1	-7658.7	201468.8	1	98236	1952423	-86471	921364	1		1				0	0	Si

Verifica a presso/tenso flessione deviata SLD §§ 4.2.4.1.2.3 - 4.2.4.1.2.6 - 4.2.4.1.2.7 - 4.2.4.1.2.8 NTC18

Verifiche eseguite utilizzando la formula conservativa (6.2) §6.2.1 EN 1993-1-1:2005.

X	Comb.	Sfruttamento	Classe	NEd	NRd	Rid. NRd da VEd	Mx,Ed	Mx,Rd	My,Ed	My,Rd	Rid. Mx,Rd da VEd	Rid. Mx,Rd da NEd	Rid. My,Rd da VEd	Rid. My,Rd da NEd	α	β	ρx	ρy	Verifica
170.7	SLD 9	0.123	1	-7372.9	201468.8	1	98568	1952423	-32785	921364	1		1				0	0	Si

Verifiche ad instabilità

Caratteristiche iniziali

Membratura principale per controllo snellezza; Calcolo di snellezze ed N critici condotti secondo gli assi principali;
Curva X: b; Curva Y: c; Svergolamento: Carico all'estradosso; Curva svergolamento: b;

Dati per instabilità attorno a x

Numero rit.	Presente	Ascissa	Campata	βx/m	Vincolo a entrambi estremi	λx/m	λVer
1	Si	0					
			1-2	1	Si	17	Si, (<200)
2	Si	170.7					

Dati per instabilità attorno a y

Numero rit.	Presente	Ascissa	Campata	βy/n	k,LT	kw,LT	Vincolo a entrambi estremi	λy/n	λVer
1	Si	0							
			1-2	1	1	1	Si	28.4	Si, (<200)
2	Si	170.7							

Verifica di stabilità per pressoflessione §C.4.2.4.1.3.3.2 NTC18

X	Comb.	Sfruttamento	Classe	NEd	NRk	Mx,Ed max	Mx,Rk	My,Ed max	My,Rk	χ,x	χ,y	kxx	kxy	kyx	kyy	χ,LT	Verifica
0	SLU 117	0.52	1	-55627.9	211542.2	473138	2050044	2.4	967432.2	1	0.935	0.709	0.584	0.928	0.974	1	Si

Verifica di stabilità per pressoflessione SLD §C.4.2.4.1.3.3.2 NTC18

X	Comb.	Sfruttamento	Classe	NEd	NRk	Mx,Ed max	Mx,Rk	My,Ed max	My,Rk	χ,x	χ,y	kxx	kxy	kyx	kyy	χ,LT	Verifica
0	SLD 9	0.116	1	-7953	211542.2	98568.3	2050044	32784.9	967432.2	1	0.935	0.614	0.461	0.928	0.768	1	Si

Verifica di stabilità a taglio anima Y §4.2.4.1.2.4 [4.2.27] NTC18

η	hw	tw	hw/tw max	Verifica
1.2	20.6	0.8	55.46	Si

Verifica di stabilità a taglio anima Y SLD §4.2.4.1.2.4 [4.2.27] NTC18

η	hw	tw	hw/tw max	Verifica
1.2	20.6	0.8	55.46	Si

Verifiche a deformabilità

Mensola X: No; Mensola Y: No.

Frecce lungo X

Ascissa freccia	Combinazione	Freccia	Luce	L/f	L/f,min	Tipo	Verifica
74	SLE RA 1	0	170.7	10000	250	Totale	Si
79.6	SLE RA 31	0	170.7	10000	250	Totale	Si
79.6	SLE RA 30	0	170.7	10000	250	Totale	Si
79.6	SLE RA 29	0	170.7	10000	250	Totale	Si
79.6	SLE RA 28	0	170.7	10000	250	Totale	Si
96.7	SLE RA 2	0	170.7	10000	350	Variabile	Si
79.6	SLE RA 31	0	170.7	10000	350	Variabile	Si
79.6	SLE RA 30	0	170.7	10000	350	Variabile	Si
79.6	SLE RA 29	0	170.7	10000	350	Variabile	Si
79.6	SLE RA 28	0	170.7	10000	350	Variabile	Si

Frecce lungo Y

Ascissa freccia	Combinazione	Freccia	Luce	L/f	L/f,min	Tipo	Verifica
74	SLE RA 7	-0.052	170.7	3294.6	250	Totale	Si
74	SLE RA 6	-0.052	170.7	3294.6	250	Totale	Si
74	SLE RA 19	-0.052	170.7	3296.8	250	Totale	Si
74	SLE RA 18	-0.052	170.7	3296.8	250	Totale	Si
74	SLE RA 3	-0.052	170.7	3311.3	250	Totale	Si
74	SLE RA 7	-0.034	170.7	5034.3	350	Variabile	Si
74	SLE RA 6	-0.034	170.7	5034.3	350	Variabile	Si
74	SLE RA 19	-0.034	170.7	5039.4	350	Variabile	Si
74	SLE RA 18	-0.034	170.7	5039.4	350	Variabile	Si
74	SLE RA 3	-0.034	170.7	5073.3	350	Variabile	Si

Superelemento in acciaio composto dall'asta 84

Caratteristiche del materiale

Acciaio: S275, fyk = 2750

Caratteristiche geometriche

Lunghezza: 128
Nodo iniziale: 48 Nodo finale: 47
Cerniera iniziale: Svincolo: M2, M3 Cerniera finale: No
Sovraresistenza: 0% Sisma Z: No

Caratteristiche della sezione

Sezione	Rotazione	Area	Jx	Jy	ix	iy	Wx	Wy	Wplx	Wply
HEA160	0	38.82	1674.7	615.62	6.57	3.98	220.36	76.95	245.43	117.67

Verifiche di resistenza

Verifiche a forza assiale §4.2.4.1.2.1 - §4.2.4.1.2.2 NTC18

X	Comb.	Sfruttamento	Classe	NEd	Nc,Rd	Nt,Rd	Riduzione da taglio	ρx	ρy	Verifica
115.2	SLU 85	0.228		23224.5		101662.9	1	0	0	Si

Verifiche a forza assiale SLD §4.2.4.1.2.1 - §4.2.4.1.2.2 NTC18

X	Comb.	Sfruttamento	Classe	NEd	Nc,Rd	Nt,Rd	Riduzione da taglio	ρx	ρy	Verifica
0	SLD 14	0.02		2012.5		101662.9	1	0	0	Si

Verifica a taglio X §4.2.4.1.2.4 NTC18

X	Comb.	Sfruttamento	VEd	Vc,Rd	Av	Interazione taglio-torsione	Riduzione torsione	Verifica
128	SLV 10	0.001	-48.3	43042.7	30.78	Considerata	0.92	Si

Verifica a taglio Y §4.2.4.1.2.4 NTC18

X	Comb.	Sfruttamento	VEd	Vc,Rd	Av	Interazione taglio-torsione	Riduzione torsione	Verifica
128	SLU 106	0.015	-298.4	20045.7	13.26	Considerata	1	Si

Verifica a taglio Y SLD §4.2.4.1.2.4 NTC18

X	Comb.	Sfruttamento	VEd	Vc,Rd	Av	Interazione taglio-torsione	Riduzione torsione	Verifica
128	SLD 16	0.003	-57.1	19880.2	13.26	Considerata	0.99	Si

Verifica a torsione §4.2.4.1.2.5 NTC18

X	Comb.	Sfruttamento torsione	TEd	TRd	Riduzione taglio resistente	Sfruttamento taglio-torsione	τEd,totale	τRd	Verifica
0	SLV 5	0.181	-2653.8	14685.6	Considerata				Si

Verifica a torsione SLD §4.2.4.1.2.5 NTC18

X	Comb.	Sfruttamento torsione	TEd	TRd	Riduzione taglio resistente	Sfruttamento taglio-torsione	τEd,totale	τRd	Verifica
0	SLD 5	0.069	-1006.2	14685.6	Considerata				Si

Verifica a presso/tenso flessione retta X §§ 4.2.4.1.2.3 - 4.2.4.1.2.6 - 4.2.4.1.2.7 - 4.2.4.1.2.8 NTC18

Verifiche eseguite utilizzando la formula conservativa (6.2) §6.2.1 EN 1993-1-1:2005.

X	Comb.	Sfruttamento	Classe	NEd	NRd	Rid. NRd da VEd	Mx,Ed	Mx,Rd	Rid. Mx,Rd da VEd	Rid. Mx,Rd da NEd	ρx	ρy	Verifica
128	SLU 85	0.283	1	23224.5	101662.9	1	34902	642783	1		0	0	Si

Verifica a presso/tenso flessione retta X SLD §§ 4.2.4.1.2.3 - 4.2.4.1.2.6 - 4.2.4.1.2.7 - 4.2.4.1.2.8 NTC18

Verifiche eseguite utilizzando la formula conservativa (6.2) §6.2.1 EN 1993-1-1:2005.

X	Comb.	Sfruttamento	Classe	NEd	NRd	Rid. NRd da VEd	Mx,Ed	Mx,Rd	Rid. Mx,Rd da VEd	Rid. Mx,Rd da NEd	ρx	ρy	Verifica
12.8	SLD 13	0.02	1	2012.5	101662.9	1	257	642783	1		0	0	Si

Verifica a presso/tenso flessione retta Y §§ 4.2.4.1.2.3 - 4.2.4.1.2.6 - 4.2.4.1.2.7 - 4.2.4.1.2.8 NTC18

Verifiche eseguite utilizzando la formula conservativa (6.2) §6.2.1 EN 1993-1-1:2005.

X	Comb.	Sfruttamento	Classe	NEd	NRd	Rid. NRd da VEd	My,Ed	My,Rd	Rid. My,Rd da VEd	Rid. My,Rd da NEd	ρx	ρy	Verifica
128	SLV 7	0.037	1	1700.5	101662.9	1	6180	308186	1		0	0	Si

Verifica a presso/tenso flessione retta Y SLD §§ 4.2.4.1.2.3 - 4.2.4.1.2.6 - 4.2.4.1.2.7 - 4.2.4.1.2.8 NTC18

Verifiche eseguite utilizzando la formula conservativa (6.2) §6.2.1 EN 1993-1-1:2005.

X	Comb.	Sfruttamento	Classe	NEd	NRd	Rid. NRd da VEd	My,Ed	My,Rd	Rid. My,Rd da VEd	Rid. My,Rd da NEd	ρx	ρy	Verifica
98.1	SLD 7	0.023	1	1766.1	101662.9	1	1797	308186	1		0	0	Si

Verifica a presso/tenso flessione deviata §§ 4.2.4.1.2.3 - 4.2.4.1.2.6 - 4.2.4.1.2.7 - 4.2.4.1.2.8 NTC18

Verifiche eseguite utilizzando la formula conservativa (6.2) §6.2.1 EN 1993-1-1:2005.

X	Comb.	Sfruttamento	Classe	NEd	NRd	Rid. NRd da VEd	Mx,Ed	Mx,Rd	My,Ed	My,Rd	Rid. Mx,Rd da VEd	Rid. Mx,Rd da NEd	Rid. My,Rd da VEd	Rid. My,Rd da NEd	α	β	ρx	ρy	Verifica
128	SLV 10	0.045	1	1945.5	101662.9	1	3738	642783	-6180	308186	1		1				0	0	Si

Verifica a presso/tenso flessione deviata SLD §§ 4.2.4.1.2.3 - 4.2.4.1.2.6 - 4.2.4.1.2.7 - 4.2.4.1.2.8 NTC18

Verifiche eseguite utilizzando la formula conservativa (6.2) §6.2.1 EN 1993-1-1:2005.

X	Comb.	Sfruttamento	Classe	NEd	NRd	Rid. NRd da VEd	Mx,Ed	Mx,Rd	My,Ed	My,Rd	Rid. Mx,Rd da VEd	Rid. Mx,Rd da NEd	Rid. My,Rd da VEd	Rid. My,Rd da NEd	α	β	ρx	ρy	Verifica
128	SLD 9	0.03	1	1879.8	101662.9	1	2685	642783	-2343	308186	1		1				0	0	Si

Verifiche ad instabilità

Caratteristiche iniziali

Membratura principale per controllo snellezza; Calcolo di snellezze ed N critici condotti secondo gli assi principali;
Curva X: b; Curva Y: c; Svergolamento: Carico all'estradosso; Curva svergolamento: b;

Dati per instabilità attorno a x

Numero rit.	Presente	Ascissa	Campata	βx/m	Vincolo a entrambi estremi	λx/m	λVer
1	Si	0					
			1-2	1	Si	19.5	Si, (<200)
2	Si	128					

Dati per instabilità attorno a y

Numero rit.	Presente	Ascissa	Campata	βy/n	k,LT	kw,LT	Vincolo a entrambi estremi	λy/n	λVer
1	Si	0							
			1-2	1	1	1	Si	32.1	Si, (<200)
2	Si	128							

Verifica di stabilità a taglio anima Y §4.2.4.1.2.4 [4.2.27] NTC18

η	hw	tw	hw/tw max	Verifica
1.2	13.4	0.6	55.46	Si

Verifica di stabilità a taglio anima Y SLD §4.2.4.1.2.4 [4.2.27] NTC18

η	hw	tw	hw/tw max	Verifica
1.2	13.4	0.6	55.46	Si

Verifiche a deformabilità

Mensola X: No; Mensola Y: No.

Frecce lungo X

Ascissa freccia	Combinazione	Freccia	Luce	L/f	L/f,min	Tipo	Verifica
76.8	SLE RA 1	0	128	10000	250	Totale	Si
72.5	SLE RA 31	0	128	10000	250	Totale	Si
72.5	SLE RA 30	0	128	10000	250	Totale	Si
72.5	SLE RA 29	0	128	10000	250	Totale	Si
72.5	SLE RA 28	0	128	10000	250	Totale	Si
72.5	SLE RA 2	0	128	10000	350	Variabile	Si
72.5	SLE RA 31	0	128	10000	350	Variabile	Si
72.5	SLE RA 30	0	128	10000	350	Variabile	Si
72.5	SLE RA 29	0	128	10000	350	Variabile	Si
72.5	SLE RA 28	0	128	10000	350	Variabile	Si

Frecce lungo Y

Ascissa freccia	Combinazione	Freccia	Luce	L/f	L/f,min	Tipo	Verifica
93.9	SLE RA 1	0	128	10000	250	Totale	Si
76.8	SLE RA 31	0.005	128	10000	250	Totale	Si
89.6	SLE RA 30	0	128	10000	250	Totale	Si
76.8	SLE RA 29	0.005	128	10000	250	Totale	Si
93.9	SLE RA 28	0	128	10000	250	Totale	Si
72.5	SLE RA 2	0.006	128	10000	350	Variabile	Si
72.5	SLE RA 31	0.005	128	10000	350	Variabile	Si
72.5	SLE RA 30	0	128	10000	350	Variabile	Si
72.5	SLE RA 29	0.005	128	10000	350	Variabile	Si
72.5	SLE RA 28	0	128	10000	350	Variabile	Si

Superelemento in acciaio composto dall'asta 85

Caratteristiche del materiale

Acciaio: S275, fyk = 2750

Caratteristiche geometriche

Lunghezza: 339
Nodo iniziale: 47 Nodo finale: 46
Cerniera iniziale: No Cerniera finale: No
Sovraresistenza: 0% Sisma Z: No

Caratteristiche della sezione

Sezione	Rotazione	Area	Jx	Jy	ix	iy	Wx	Wy	Wplx	Wply
HEA160	0	38.82	1674.7	615.62	6.57	3.98	220.36	76.95	245.43	117.67

Verifiche di resistenza

Verifiche a forza assiale §4.2.4.1.2.1 - §4.2.4.1.2.2 NTC18

X	Comb.	Sfruttamento	Classe	NEd	Nc,Rd	Nt,Rd	Riduzione da taglio	ρx	ρy	Verifica
339	SLU 85	0.294		29855.9		101662.9	1	0	0	Si

Verifiche a forza assiale SLD §4.2.4.1.2.1 - §4.2.4.1.2.2 NTC18

X	Comb.	Sfruttamento	Classe	NEd	Nc,Rd	Nt,Rd	Riduzione da taglio	ρx	ρy	Verifica
316.4	SLD 10	0.007		670.3		101662.9	1	0	0	Si

Verifica a taglio Y §4.2.4.1.2.4 NTC18

X	Comb.	Sfruttamento	VEd	Vc,Rd	Av	Interazione taglio-torsione	Riduzione torsione	Verifica
0	SLV 14	0.004	72.4	20045.7	13.26	Considerata	1	Si

Verifica a taglio Y SLD §4.2.4.1.2.4 NTC18

X	Comb.	Sfruttamento	VEd	Vc,Rd	Av	Interazione taglio-torsione	Riduzione torsione	Verifica
0	SLD 13	0.003	61.3	20045.7	13.26	Considerata	1	Si

Verifica a presso/tenso flessione retta X §§ 4.2.4.1.2.3 - 4.2.4.1.2.6 - 4.2.4.1.2.7 - 4.2.4.1.2.8 NTC18

Verifiche eseguite utilizzando la formula conservativa (6.2) §6.2.1 EN 1993-1-1:2005.

X	Comb.	Sfruttamento	Classe	NEd	NRd	Rid. NRd da VEd	Mx,Ed	Mx,Rd	Rid. Mx,Rd da VEd	Rid. Mx,Rd da NEd	ρx	ρy	Verifica
169.5	SLU 85	0.347	1	29855.9	101662.9	1	-34434	642783	1		0	0	Si

Verifica a presso/tenso flessione retta Y §§ 4.2.4.1.2.3 - 4.2.4.1.2.6 - 4.2.4.1.2.7 - 4.2.4.1.2.8 NTC18

Verifiche eseguite utilizzando la formula conservativa (6.2) §6.2.1 EN 1993-1-1:2005.

X	Comb.	Sfruttamento	Classe	NEd	NRd	Rid. NRd da VEd	My,Ed	My,Rd	Rid. My,Rd da VEd	Rid. My,Rd da NEd	ρx	ρy	Verifica
316.4	SLV 7	0.015	1	670.3	101662.9	1	-2560	308186	1		0	0	Si

Verifica a presso/tenso flessione retta Y SLD §§ 4.2.4.1.2.3 - 4.2.4.1.2.6 - 4.2.4.1.2.7 - 4.2.4.1.2.8 NTC18

Verifiche eseguite utilizzando la formula conservativa (6.2) §6.2.1 EN 1993-1-1:2005.

X	Comb.	Sfruttamento	Classe	NEd	NRd	Rid. NRd da VEd	My,Ed	My,Rd	Rid. My,Rd da VEd	Rid. My,Rd da NEd	ρx	ρy	Verifica
327.7	SLD 7	0.01	1	670.3	101662.9	1	-971	308186	1		0	0	Si

Verifica a presso/tenso flessione deviata §§ 4.2.4.1.2.3 - 4.2.4.1.2.6 - 4.2.4.1.2.7 - 4.2.4.1.2.8 NTC18

Verifiche eseguite utilizzando la formula conservativa (6.2) §6.2.1 EN 1993-1-1:2005.

X	Comb.	Sfruttamento	Classe	NEd	NRd	Rid. NRd da VEd	Mx,Ed	Mx,Rd	My,Ed	My,Rd	Rid. Mx,Rd da VEd	Rid. Mx,Rd da NEd	Rid. My,Rd da VEd	Rid. My,Rd da NEd	α	β	ρx	ρy	Verifica
192.1	SLV 10	0.022	1	670.3	101662.9	1	-4466	642783	2560	308186	1		1				0	0	Si

Verifica a presso/tenso flessione deviata SLD §§ 4.2.4.1.2.3 - 4.2.4.1.2.6 - 4.2.4.1.2.7 - 4.2.4.1.2.8 NTC18

Verifiche eseguite utilizzando la formula conservativa (6.2) §6.2.1 EN 1993-1-1:2005.

X	Comb.	Sfruttamento	Classe	NEd	NRd	Rid. NRd da VEd	Mx,Ed	Mx,Rd	My,Ed	My,Rd	Rid. Mx,Rd da VEd	Rid. Mx,Rd da NEd	Rid. My,Rd da VEd	Rid. My,Rd da NEd	α	β	ρx	ρy	Verifica
180.8	SLD 9	0.017	1	670.3	101662.9	1	-4416	642783	971	308186	1		1				0	0	Si

Verifiche ad instabilità

Caratteristiche iniziali

Membratura principale per controllo snellezza; Calcolo di snellezze ed N critici condotti secondo gli assi principali;
Curva X: b; Curva Y: c; Svergolamento: Carico all'estradosso; Curva svergolamento: b;

Dati per instabilità attorno a x

Numero rit.	Presente	Ascissa	Campata	βx/m	Vincolo a entrambi estremi	λx/m	λVer
1	Si	0					
			1-2	1	Si	51.6	Si, (<200)
2	Si	339					

Dati per instabilità attorno a y

Numero rit.	Presente	Ascissa	Campata	βy/n	k,LT	kw,LT	Vincolo a entrambi estremi	λy/n	λVer
1	Si	0							
			1-2	1	1	1	Si	85.1	Si, (<200)
2	Si	339							

Verifica a svergolamento con trazione §4.2.4.1.3.2 NTC18 - §5.5.3 ENV 1993-1-1:1994

X	Comb.	Sfruttamento	Classe	Obblig.	NEd	Mx,Ed	Mx,Eff,Ed	Mb,Rd,x	χ,LT	λ adim. LT	L,LT	M,critico	Verifica
169.5	SLU 92	0.005	1	Si	899.5	-5887.8	-2313.3	514049.3	0.8	0.831	339	976699	Si

Verifica di stabilità per tenso-flessione deviata §5.5.3 - §5.5.4 ENV 1993-1-1:1994

X	Comb.	Sfruttamento	Classe	NEd	Mx,Ed	Mx,Eff,Ed	My,Ed	χ,LT	kLT	ky	M,critico	Wx	Wy	Verifica
192.1	SLV 10	0.012	1	670.3	-4465.6	-1802	2560	0.8	1	1	976699	245.4	117.7	Si

Verifica di stabilità per tenso-flessione deviata SLD §5.5.3 - §5.5.4 ENV 1993-1-1:1994

X	Comb.	Sfruttamento	Classe	NEd	Mx,Ed	Mx,Eff,Ed	My,Ed	χ,LT	kLT	ky	M,critico	Wx	Wy	Verifica
180.8	SLD 9	0.007	1	670.3	-4415.8	-1752.2	970.6	0.8	1	1	976699	245.4	117.7	Si

Verifica di stabilità a taglio anima Y §4.2.4.1.2.4 [4.2.27] NTC18

η	hw	tw	hw/tw max	Verifica
1.2	13.4	0.6	55.46	Si

Verifica di stabilità a taglio anima Y SLD §4.2.4.1.2.4 [4.2.27] NTC18

η	hw	tw	hw/tw max	Verifica
1.2	13.4	0.6	55.46	Si

Verifiche a deformabilità

Mensola X: No; Mensola Y: No.

Frecce lungo X

Ascissa freccia	Combinazione	Freccia	Luce	L/f	L/f,min	Tipo	Verifica
169.5	SLE RA 1	0	339	10000	250	Totale	Si
169.5	SLE RA 31	0	339	10000	250	Totale	Si
169.5	SLE RA 30	0	339	10000	250	Totale	Si
169.5	SLE RA 29	0	339	10000	250	Totale	Si
169.5	SLE RA 28	0	339	10000	250	Totale	Si
169.5	SLE RA 2	0	339	10000	350	Variabile	Si
169.5	SLE RA 31	0	339	10000	350	Variabile	Si
169.5	SLE RA 30	0	339	10000	350	Variabile	Si
169.5	SLE RA 29	0	339	10000	350	Variabile	Si
169.5	SLE RA 28	0	339	10000	350	Variabile	Si

Frecce lungo Y

Ascissa freccia	Combinazione	Freccia	Luce	L/f	L/f,min	Tipo	Verifica
169.5	SLE RA 19	-0.094	339	3614.5	250	Totale	Si
169.5	SLE RA 18	-0.094	339	3614.5	250	Totale	Si
169.5	SLE RA 7	-0.094	339	3621.4	250	Totale	Si
169.5	SLE RA 6	-0.094	339	3621.4	250	Totale	Si
169.5	SLE RA 15	-0.093	339	3643.5	250	Totale	Si
169.5	SLE RA 19	-0.078	339	4336.1	350	Variabile	Si
169.5	SLE RA 18	-0.078	339	4336.1	350	Variabile	Si
169.5	SLE RA 7	-0.078	339	4346.1	350	Variabile	Si
169.5	SLE RA 6	-0.078	339	4346.1	350	Variabile	Si
169.5	SLE RA 15	-0.077	339	4378	350	Variabile	Si

Superelemento in acciaio composto dall'asta 86

Caratteristiche del materiale

Acciaio: S275, fyk = 2750

Caratteristiche geometriche

Lunghezza: 128
Nodo iniziale: 46 Nodo finale: 45
Cerniera iniziale: No Cerniera finale: Svincolo: M2, M3
Sovraresistenza: 0% Sisma Z: No

Caratteristiche della sezione

Sezione	Rotazione	Area	Jx	Jy	ix	iy	Wx	Wy	Wplx	Wply
HEA160	0	38.82	1674.7	615.62	6.57	3.98	220.36	76.95	245.43	117.67

Verifiche di resistenza

Verifiche a forza assiale §4.2.4.1.2.1 - §4.2.4.1.2.2 NTC18

X	Comb.	Sfruttamento	Classe	NEd	Nc,Rd	Nt,Rd	Riduzione da taglio	ρx	ρy	Verifica
128	SLU 118	0.227		23085.3		101662.9	1	0	0	Si

Verifiche a forza assiale SLD §4.2.4.1.2.1 - §4.2.4.1.2.2 NTC18

X	Comb.	Sfruttamento	Classe	NEd	Nc,Rd	Nt,Rd	Riduzione da taglio	ρx	ρy	Verifica
0	SLD 1	0.02		2012.5		101662.9	1	0	0	Si

Verifica a taglio X §4.2.4.1.2.4 NTC18

X	Comb.	Sfruttamento	VEd	Vc,Rd	Av	Interazione taglio-torsione	Riduzione torsione	Verifica
0	SLV 5	0.001	48.3	43042.7	30.78	Considerata	0.92	Si

Verifica a taglio Y §4.2.4.1.2.4 NTC18

X	Comb.	Sfruttamento	VEd	Vc,Rd	Av	Interazione taglio-torsione	Riduzione torsione	Verifica
0	SLU 73	0.015	298.5	20045.7	13.26	Considerata	1	Si

Verifica a taglio Y SLD §4.2.4.1.2.4 NTC18

X	Comb.	Sfruttamento	VEd	Vc,Rd	Av	Interazione taglio-torsione	Riduzione torsione	Verifica
0	SLD 4	0.003	57.1	19880.2	13.26	Considerata	0.99	Si

Verifica a torsione §4.2.4.1.2.5 NTC18

X	Comb.	Sfruttamento torsione	TEd	TRd	Riduzione taglio resistente	Sfruttamento taglio-torsione	τEd,totale	τRd	Verifica
68.3	SLV 9	0.181	2653.8	14685.6	Considerata				Si

Verifica a torsione SLD §4.2.4.1.2.5 NTC18

X	Comb.	Sfruttamento torsione	TEd	TRd	Riduzione taglio resistente	Sfruttamento taglio-torsione	τEd,totale	τRd	Verifica
68.3	SLD 9	0.069	1006.2	14685.6	Considerata				Si

Verifica a presso/tenso flessione retta X §§ 4.2.4.1.2.3 - 4.2.4.1.2.6 - 4.2.4.1.2.7 - 4.2.4.1.2.8 NTC18

Verifiche eseguite utilizzando la formula conservativa (6.2) §6.2.1 EN 1993-1-1:2005.

X	Comb.	Sfruttamento	Classe	NEd	NRd	Rid. NRd da VEd	Mx,Ed	Mx,Rd	Rid. Mx,Rd da VEd	Rid. Mx,Rd da NEd	ρx	ρy	Verifica
0	SLU 85	0.281	1	23085.3	101662.9	1	34939	642783	1		0	0	Si

Verifica a presso/tenso flessione retta X SLD §§ 4.2.4.1.2.3 - 4.2.4.1.2.6 - 4.2.4.1.2.7 - 4.2.4.1.2.8 NTC18

Verifiche eseguite utilizzando la formula conservativa (6.2) §6.2.1 EN 1993-1-1:2005.

X	Comb.	Sfruttamento	Classe	NEd	NRd	Rid. NRd da VEd	Mx,Ed	Mx,Rd	Rid. Mx,Rd da VEd	Rid. Mx,Rd da NEd	ρx	ρy	Verifica
115.2	SLD 1	0.02	1	2012.5	101662.9	1	257	642783	1		0	0	Si

Verifica a presso/tenso flessione retta Y §§ 4.2.4.1.2.3 - 4.2.4.1.2.6 - 4.2.4.1.2.7 - 4.2.4.1.2.8 NTC18

Verifiche eseguite utilizzando la formula conservativa (6.2) §6.2.1 EN 1993-1-1:2005.

X	Comb.	Sfruttamento	Classe	NEd	NRd	Rid. NRd da VEd	My,Ed	My,Rd	Rid. My,Rd da VEd	Rid. My,Rd da NEd	ρx	ρy	Verifica
0	SLV 12	0.037	1	1700.5	101662.9	1	6180	308186	1		0	0	Si

Verifica a presso/tenso flessione retta Y SLD §§ 4.2.4.1.2.3 - 4.2.4.1.2.6 - 4.2.4.1.2.7 - 4.2.4.1.2.8 NTC18

Verifiche eseguite utilizzando la formula conservativa (6.2) §6.2.1 EN 1993-1-1:2005.

X	Comb.	Sfruttamento	Classe	NEd	NRd	Rid. NRd da VEd	My,Ed	My,Rd	Rid. My,Rd da VEd	Rid. My,Rd da NEd	ρx	ρy	Verifica
29.9	SLD 11	0.023	1	1766.1	101662.9	1	1797	308186	1		0	0	Si

Verifica a presso/tenso flessione deviata §§ 4.2.4.1.2.3 - 4.2.4.1.2.6 - 4.2.4.1.2.7 - 4.2.4.1.2.8 NTC18

Verifiche eseguite utilizzando la formula conservativa (6.2) §6.2.1 EN 1993-1-1:2005.

X	Comb.	Sfruttamento	Classe	NEd	NRd	Rid. NRd da VEd	Mx,Ed	Mx,Rd	My,Ed	My,Rd	Rid. Mx,Rd da VEd	Rid. Mx,Rd da NEd	Rid. My,Rd da VEd	Rid. My,Rd da NEd	α	β	ρx	ρy	Verifica
0	SLV 5	0.045	1	1945.5	101662.9	1	3738	642783	-6180	308186	1		1				0	0	Si

Verifica a presso/tenso flessione deviata SLD §§ 4.2.4.1.2.3 - 4.2.4.1.2.6 - 4.2.4.1.2.7 - 4.2.4.1.2.8 NTC18

Verifiche eseguite utilizzando la formula conservativa (6.2) §6.2.1 EN 1993-1-1:2005.

X	Comb.	Sfruttamento	Classe	NEd	NRd	Rid. NRd da VEd	Mx,Ed	Mx,Rd	My,Ed	My,Rd	Rid. Mx,Rd da VEd	Rid. Mx,Rd da NEd	Rid. My,Rd da VEd	Rid. My,Rd da NEd	α	β	ρx	ρy	Verifica
0	SLD 6	0.03	1	1879.8	101662.9	1	2685	642783	-2343	308186	1		1				0	0	Si

Verifiche ad instabilità

Caratteristiche iniziali

Membratura principale per controllo snellezza; Calcolo di snellezze ed N critici condotti secondo gli assi principali;
Curva X: b; Curva Y: c; Svergolamento: Carico all'estradosso; Curva svergolamento: b;

Dati per instabilità attorno a x

Numero rit.	Presente	Ascissa	Campata	βx/m	Vincolo a entrambi estremi	λx/m	λVer
1	Si	0					
			1-2	1	Si	19.5	Si, (<200)
2	Si	128					

Dati per instabilità attorno a y

Numero rit.	Presente	Ascissa	Campata	βy/n	k,LT	kw,LT	Vincolo a entrambi estremi	λy/n	λVer
1	Si	0							
			1-2	1	1	1	Si	32.1	Si, (<200)

Numero rit.	Presente	Ascissa	Campata	βy/n	k,LT	kw,LT	Vincolo a entrambi estremi	λy/n	λVer
2	Si	128							

Verifica di stabilità a taglio anima Y §4.2.4.1.2.4 [4.2.27] NTC18

η	hw	tw	hw/tw max	Verifica
1.2	13.4	0.6	55.46	Si

Verifica di stabilità a taglio anima Y SLD §4.2.4.1.2.4 [4.2.27] NTC18

η	hw	tw	hw/tw max	Verifica
1.2	13.4	0.6	55.46	Si

Verifiche a deformabilità

Mensola X: No; Mensola Y: No.

Frecce lungo X

Ascissa freccia	Combinazione	Freccia	Luce	L/f	L/f,min	Tipo	Verifica
51.2	SLE RA 1	0	128	10000	250	Totale	Si
55.5	SLE RA 31	0	128	10000	250	Totale	Si
55.5	SLE RA 30	0	128	10000	250	Totale	Si
55.5	SLE RA 29	0	128	10000	250	Totale	Si
55.5	SLE RA 28	0	128	10000	250	Totale	Si
55.5	SLE RA 2	0	128	10000	350	Variabile	Si
55.5	SLE RA 31	0	128	10000	350	Variabile	Si
55.5	SLE RA 30	0	128	10000	350	Variabile	Si
55.5	SLE RA 29	0	128	10000	350	Variabile	Si
55.5	SLE RA 28	0	128	10000	350	Variabile	Si

Frecce lungo Y

Ascissa freccia	Combinazione	Freccia	Luce	L/f	L/f,min	Tipo	Verifica
34.1	SLE RA 1	0	128	10000	250	Totale	Si
51.2	SLE RA 31	0.005	128	10000	250	Totale	Si
38.4	SLE RA 30	0	128	10000	250	Totale	Si
51.2	SLE RA 29	0.005	128	10000	250	Totale	Si
34.1	SLE RA 28	0	128	10000	250	Totale	Si
55.5	SLE RA 2	0.006	128	10000	350	Variabile	Si
55.5	SLE RA 31	0.005	128	10000	350	Variabile	Si
55.5	SLE RA 30	0	128	10000	350	Variabile	Si
55.5	SLE RA 29	0.005	128	10000	350	Variabile	Si
55.5	SLE RA 28	0	128	10000	350	Variabile	Si

Superelemento in acciaio composto dall'asta 87

Caratteristiche del materiale

Acciaio: S275, fyk = 2750

Caratteristiche geometriche

Lunghezza: 197.7
Nodo iniziale: 13 Nodo finale: 47
Cerniera iniziale: Svincolo: M2, M3 Cerniera finale: Svincolo: M2, M3
Sovraresistenza: 0% Sisma Z: No

Caratteristiche della sezione

Sezione	Rotazione	Area	Jx	Jy	ix	iy	Wx	Wy	Wplx	Wply
HEA160	0	38.82	1674.7	615.62	6.57	3.98	220.36	76.95	245.43	117.67

Verifiche di resistenza

Verifiche a forza assiale §4.2.4.1.2.1 - §4.2.4.1.2.2 NTC18

X	Comb.	Sfruttamento	Classe	NEd	Nc,Rd	Nt,Rd	Riduzione da taglio	ρx	ρy	Verifica
0	SLU 118	0.507	1	-51564.6	101662.9		1	0	0	Si

Verifiche a forza assiale SLD §4.2.4.1.2.1 - §4.2.4.1.2.2 NTC18

X	Comb.	Sfruttamento	Classe	NEd	Nc,Rd	Nt,Rd	Riduzione da taglio	ρx	ρy	Verifica
0	SLD 14	0.067	1	-6813.8	101662.9		1	0	0	Si

Verifica a taglio Y §4.2.4.1.2.4 NTC18

X	Comb.	Sfruttamento	VEd	Vc,Rd	Av	Interazione taglio-torsione	Riduzione torsione	Verifica
197.7	SLU 114	0.002	-33.8	20045.7	13.26	Considerata	1	Si

Verifica a taglio Y SLD §4.2.4.1.2.4 NTC18

X	Comb.	Sfruttamento	VEd	Vc,Rd	Av	Interazione taglio-torsione	Riduzione torsione	Verifica
0	SLD 5	0.001	26	19633.8	13.26	Considerata	0.98	Si

Verifica a torsione §4.2.4.1.2.5 NTC18

X	Comb.	Sfruttamento torsione	TEd	TRd	Riduzione taglio resistente	Sfruttamento taglio-torsione	τEd,totale	τRd	Verifica
0	SLV 5	0.134	-1969.3	14685.6	Considerata				Si

Verifica a torsione SLD §4.2.4.1.2.5 NTC18

X	Comb.	Sfruttamento torsione	TEd	TRd	Riduzione taglio resistente	Sfruttamento taglio-torsione	τEd,totale	τRd	Verifica
0	SLD 5	0.051	-746.6	14685.6	Considerata				Si

Verifica a presso/tenso flessione retta X §§ 4.2.4.1.2.3 - 4.2.4.1.2.6 - 4.2.4.1.2.7 - 4.2.4.1.2.8 NTC18

Verifiche eseguite utilizzando la formula conservativa (6.2) §6.2.1 EN 1993-1-1:2005.

X	Comb.	Sfruttamento	Classe	NEd	NRd	Rid. NRd da VEd	Mx,Ed	Mx,Rd	Rid. Mx,Rd da VEd	Rid. Mx,Rd da NEd	ρx	ρy	Verifica
92.2	SLU 85	0.51	1	-51546.2	101662.9	1	-1661	642783	1		0	0	Si

Verifica a presso/tenso flessione retta X SLD §§ 4.2.4.1.2.3 - 4.2.4.1.2.6 - 4.2.4.1.2.7 - 4.2.4.1.2.8 NTC18

Verifiche eseguite utilizzando la formula conservativa (6.2) §6.2.1 EN 1993-1-1:2005.

X	Comb.	Sfruttamento	Classe	NEd	NRd	Rid. NRd da VEd	Mx,Ed	Mx,Rd	Rid. Mx,Rd da VEd	Rid. Mx,Rd da NEd	ρx	ρy	Verifica
92.2	SLD 14	0.069	1	-6799.6	101662.9	1	-1278	642783	1		0	0	Si

Verifiche ad instabilità

Caratteristiche iniziali

Membratura principale per controllo snellezza; Calcolo di snellezze ed N critici condotti secondo gli assi principali;
Curva X: b; Curva Y: c; Svergolamento: Carico all'estradosso; Curva svergolamento: b;

Dati per instabilità attorno a x

Numero rit.	Presente	Ascissa	Campata	βx/m	Vincolo a entrambi estremi	λx/m	λVer
1	Si	0					
			1-2	1	Si	30.1	Si, (<200)
2	Si	197.7					

Dati per instabilità attorno a y

Numero rit.	Presente	Ascissa	Campata	βy/n	k,LT	kw,LT	Vincolo a entrambi estremi	λy/n	λVer
1	Si	0							
			1-2	1	1	1	Si	49.6	Si, (<200)
2	Si	197.7							

Verifica di stabilità per pressoflessione §C.4.2.4.1.3.3.2 NTC18

X	Comb.	Sfruttamento	Classe	NEd	NRk	Mx,Ed max	Mx,Rk	My,Ed max	My,Rk	χ,x	χ,y	kxx	kxy	kyx	kyy	χ,LT	Verifica
0	SLU 118	0.635	1	-51564.6	106746.1	1668.7	674922.6	1.5	323595.1	0.947	0.802	1.025	0.766	0.948	1.277	0.933	Si

Verifica di stabilità per pressoflessione SLD §C.4.2.4.1.3.3.2 NTC18

X	Comb.	Sfruttamento	Classe	NEd	NRk	Mx,Ed max	Mx,Rk	My,Ed max	My,Rk	χ,x	χ,y	kxx	kxy	kyx	kyy	χ,LT	Verifica
0	SLD 14	0.086	1	-6813.8	106746.1	1283.6	674922.6	1.1	323595.1	0.947	0.802	0.96	0.596	0.993	0.993	0.933	Si

Verifica di stabilità a taglio anima Y §4.2.4.1.2.4 [4.2.27] NTC18

η	hw	tw	hw/tw max	Verifica
1.2	13.4	0.6	55.46	Si

Verifica di stabilità a taglio anima Y SLD §4.2.4.1.2.4 [4.2.27] NTC18

η	hw	tw	hw/tw max	Verifica
1.2	13.4	0.6	55.46	Si

Verifiche a deformabilità

Mensola X: No; Mensola Y: No.

Frecce lungo X

Ascissa freccia	Combinazione	Freccia	Luce	L/f	L/f,min	Tipo	Verifica
98.8	SLE RA 1	0	197.7	10000	250	Totale	Si
98.8	SLE RA 31	0	197.7	10000	250	Totale	Si
98.8	SLE RA 30	0	197.7	10000	250	Totale	Si
98.8	SLE RA 29	0	197.7	10000	250	Totale	Si
98.8	SLE RA 28	0	197.7	10000	250	Totale	Si
145	SLE RA 2	0	197.7	10000	350	Variabile	Si
177.9	SLE RA 31	0	197.7	10000	350	Variabile	Si
177.9	SLE RA 30	0	197.7	10000	350	Variabile	Si
177.9	SLE RA 29	0	197.7	10000	350	Variabile	Si
177.9	SLE RA 28	0	197.7	10000	350	Variabile	Si

Frecce lungo Y

Ascissa freccia	Combinazione	Freccia	Luce	L/f	L/f,min	Tipo	Verifica
98.8	SLE RA 1	-0.002	197.7	10000	250	Totale	Si
98.8	SLE RA 31	-0.002	197.7	10000	250	Totale	Si
98.8	SLE RA 30	-0.002	197.7	10000	250	Totale	Si
98.8	SLE RA 29	-0.002	197.7	10000	250	Totale	Si
98.8	SLE RA 28	-0.002	197.7	10000	250	Totale	Si
158.1	SLE RA 2	0	197.7	10000	350	Variabile	Si
158.1	SLE RA 31	0	197.7	10000	350	Variabile	Si
191.1	SLE RA 30	0	197.7	10000	350	Variabile	Si
158.1	SLE RA 29	0	197.7	10000	350	Variabile	Si
145	SLE RA 28	0	197.7	10000	350	Variabile	Si

Superelemento in acciaio composto dall'asta 88

Caratteristiche del materiale

Acciaio: S275, fyk = 2750

Caratteristiche geometriche

Lunghezza: 197.7

Nodo iniziale: 12 Nodo finale: 46
Cerniera iniziale: Svincolo: M2, M3 Cerniera finale: Svincolo: M2, M3
Sovraresistenza: 0% Sisma Z: No

Caratteristiche della sezione

Sezione	Rotazione	Area	Jx	Jy	ix	iy	Wx	Wy	Wplx	Wply
HEA160	0	38.82	1674.7	615.62	6.57	3.98	220.36	76.95	245.43	117.67

Verifiche di resistenza

Verifiche a forza assiale §4.2.4.1.2.1 - §4.2.4.1.2.2 NTC18

X	Comb.	Sfruttamento	Classe	NEd	Nc,Rd	Nt,Rd	Riduzione da taglio	ρx	ρy	Verifica
0	SLU 85	0.508	1	-51641.7	101662.9		1	0	0	Si

Verifiche a forza assiale SLD §4.2.4.1.2.1 - §4.2.4.1.2.2 NTC18

X	Comb.	Sfruttamento	Classe	NEd	Nc,Rd	Nt,Rd	Riduzione da taglio	ρx	ρy	Verifica
0	SLD 1	0.067	1	-6813.8	101662.9		1	0	0	Si

Verifica a taglio Y §4.2.4.1.2.4 NTC18

X	Comb.	Sfruttamento	VEd	Vc,Rd	Av	Interazione taglio-torsione	Riduzione torsione	Verifica
197.7	SLU 114	0.002	-33.8	20045.7	13.26	Considerata	1	Si

Verifica a taglio Y SLD §4.2.4.1.2.4 NTC18

X	Comb.	Sfruttamento	VEd	Vc,Rd	Av	Interazione taglio-torsione	Riduzione torsione	Verifica
197.7	SLD 9	0.001	-26	19633.8	13.26	Considerata	0.98	Si

Verifica a torsione §4.2.4.1.2.5 NTC18

X	Comb.	Sfruttamento torsione	TEd	TRd	Riduzione taglio resistente	Sfruttamento taglio-torsione	τEd,totale	τRd	Verifica
105.4	SLV 9	0.134	1969.3	14685.6	Considerata				Si

Verifica a torsione SLD §4.2.4.1.2.5 NTC18

X	Comb.	Sfruttamento torsione	TEd	TRd	Riduzione taglio resistente	Sfruttamento taglio-torsione	τEd,totale	τRd	Verifica
105.4	SLD 9	0.051	746.6	14685.6	Considerata				Si

Verifica a presso/tenso flessione retta X §§ 4.2.4.1.2.3 - 4.2.4.1.2.6 - 4.2.4.1.2.7 - 4.2.4.1.2.8 NTC18

Verifiche eseguite utilizzando la formula conservativa (6.2) §6.2.1 EN 1993-1-1:2005.

X	Comb.	Sfruttamento	Classe	NEd	NRd	Rid. NRd da VEd	Mx,Ed	Mx,Rd	Rid. Mx,Rd da VEd	Rid. Mx,Rd da NEd	ρx	ρy	Verifica
92.2	SLU 85	0.51	1	-51623.2	101662.9	1	-1661	642783	1		0	0	Si

Verifica a presso/tenso flessione retta X SLD §§ 4.2.4.1.2.3 - 4.2.4.1.2.6 - 4.2.4.1.2.7 - 4.2.4.1.2.8 NTC18

Verifiche eseguite utilizzando la formula conservativa (6.2) §6.2.1 EN 1993-1-1:2005.

X	Comb.	Sfruttamento	Classe	NEd	NRd	Rid. NRd da VEd	Mx,Ed	Mx,Rd	Rid. Mx,Rd da VEd	Rid. Mx,Rd da NEd	ρx	ρy	Verifica
92.2	SLD 2	0.069	1	-6799.6	101662.9	1	-1278	642783	1		0	0	Si

Verifiche ad instabilità

Caratteristiche iniziali

Membratura principale per controllo snellezza; Calcolo di snellezze ed N critici condotti secondo gli assi principali;
Curva X: b; Curva Y: c; Svergolamento: Carico all'estradosso; Curva svergolamento: b;

Dati per instabilità attorno a x

Numero rit.	Presente	Ascissa	Campata	βx/m	Vincolo a entrambi estremi	λx/m	λVer
1	Si	0					
			1-2	1	Si	30.1	Si, (<200)
2	Si	197.7					

Dati per instabilità attorno a y

Numero rit.	Presente	Ascissa	Campata	βy/n	k,LT	kw,LT	Vincolo a entrambi estremi	λy/n	λVer
1	Si	0							
			1-2	1	1	1	Si	49.6	Si, (<200)
2	Si	197.7							

Verifica di stabilità per pressoflessione §C.4.2.4.1.3.3.2 NTC18

X	Comb.	Sfruttamento	Classe	NEd	NRk	Mx,Ed max	Mx,Rk	My,Ed max	My,Rk	χ,x	χ,y	kxx	kxy	kyx	kyy	χ,LT	Verifica
0	SLU 85	0.636	1	-51641.7	106746.1	1668.7	674922.6	0	323595.1	0.947	0.802	1.025	0.484	0.948	0.807	0.933	Si

Verifica di stabilità per pressoflessione SLD §C.4.2.4.1.3.3.2 NTC18

X	Comb.	Sfruttamento	Classe	NEd	NRk	Mx,Ed max	Mx,Rk	My,Ed max	My,Rk	χ,x	χ,y	kxx	kxy	kyx	kyy	χ,LT	Verifica
0	SLD 1	0.086	1	-6813.8	106746.1	1283.6	674922.6	0	323595.1	0.947	0.802	0.96	0.376	0.993	0.627	0.933	Si

Verifica di stabilità a taglio anima Y §4.2.4.1.2.4 [4.2.27] NTC18

η	hw	tw	hw/tw max	Verifica
1.2	13.4	0.6	55.46	Si

Verifica di stabilità a taglio anima Y SLD §4.2.4.1.2.4 [4.2.27] NTC18

η	hw	tw	hw/tw max	Verifica
1.2	13.4	0.6	55.46	Si

Verifiche a deformabilità

Mensola X: No; Mensola Y: No.

Frecce lungo X

Ascissa freccia	Combinazione	Freccia	Luce	L/f	L/f,min	Tipo	Verifica
98.8	SLE RA 1	0	197.7	10000	250	Totale	Si
164.7	SLE RA 31	0	197.7	10000	250	Totale	Si
164.7	SLE RA 30	0	197.7	10000	250	Totale	Si
164.7	SLE RA 29	0	197.7	10000	250	Totale	Si
164.7	SLE RA 28	0	197.7	10000	250	Totale	Si
125.2	SLE RA 2	0	197.7	10000	350	Variabile	Si
164.7	SLE RA 31	0	197.7	10000	350	Variabile	Si
164.7	SLE RA 30	0	197.7	10000	350	Variabile	Si
164.7	SLE RA 29	0	197.7	10000	350	Variabile	Si
164.7	SLE RA 28	0	197.7	10000	350	Variabile	Si

Frecce lungo Y

Ascissa freccia	Combinazione	Freccia	Luce	L/f	L/f,min	Tipo	Verifica
98.8	SLE RA 1	-0.002	197.7	10000	250	Totale	Si
98.8	SLE RA 31	-0.002	197.7	10000	250	Totale	Si
98.8	SLE RA 30	-0.002	197.7	10000	250	Totale	Si
98.8	SLE RA 29	-0.002	197.7	10000	250	Totale	Si
98.8	SLE RA 28	-0.002	197.7	10000	250	Totale	Si
118.6	SLE RA 2	0	197.7	10000	350	Variabile	Si
118.6	SLE RA 31	0	197.7	10000	350	Variabile	Si
184.5	SLE RA 30	0	197.7	10000	350	Variabile	Si
118.6	SLE RA 29	0	197.7	10000	350	Variabile	Si
171.3	SLE RA 28	0	197.7	10000	350	Variabile	Si

Superelemento in acciaio composto dall'asta 89

Caratteristiche del materiale

Acciaio: S275, fyk = 2750

Caratteristiche geometriche

Lunghezza: 88.1
Nodo iniziale: 47 Nodo finale: 80
Cerniera iniziale: Svincolo: M2, M3 Cerniera finale: Svincolo: M2, M3
Sovraresistenza: 0% Sisma Z: No

Caratteristiche della sezione

Sezione	Rotazione	Area	Jx	Jy	ix	iy	Wx	Wy	Wplx	Wply
HEA160	0	38.82	1674.7	615.62	6.57	3.98	220.36	76.95	245.43	117.67

Verifiche di resistenza

Verifiche a forza assiale §4.2.4.1.2.1 - §4.2.4.1.2.2 NTC18

X	Comb.	Sfruttamento	Classe	NEd	Nc,Rd	Nt,Rd	Riduzione da taglio	ρx	ρy	Verifica
88.1	SLU 3	0.054		5523.1		101662.9	1	0	0	Si

Verifiche a forza assiale SLD §4.2.4.1.2.1 - §4.2.4.1.2.2 NTC18

X	Comb.	Sfruttamento	Classe	NEd	Nc,Rd	Nt,Rd	Riduzione da taglio	ρx	ρy	Verifica
0	SLD 16	0.005	1	-512	101662.9		1	0	0	Si

Verifica a taglio Y §4.2.4.1.2.4 NTC18

X	Comb.	Sfruttamento	VEd	Vc,Rd	Av	Interazione taglio-torsione	Riduzione torsione	Verifica
0	SLU 84	0.001	14.4	20045.7	13.26	Considerata	1	Si

Verifica a torsione §4.2.4.1.2.5 NTC18

X	Comb.	Sfruttamento torsione	TEd	TRd	Riduzione taglio resistente	Sfruttamento taglio-torsione	τEd,totale	τRd	Verifica
47	SLV 9	0.056	-825.6	14685.6	Considerata				Si

Verifica a torsione SLD §4.2.4.1.2.5 NTC18

X	Comb.	Sfruttamento torsione	TEd	TRd	Riduzione taglio resistente	Sfruttamento taglio-torsione	τEd,totale	τRd	Verifica
47	SLD 9	0.021	-313	14685.6	Considerata				Si

Verifica a presso/tenso flessione retta X §§ 4.2.4.1.2.3 - 4.2.4.1.2.6 - 4.2.4.1.2.7 - 4.2.4.1.2.8 NTC18

Verifiche eseguite utilizzando la formula conservativa (6.2) §6.2.1 EN 1993-1-1:2005.

X	Comb.	Sfruttamento	Classe	NEd	NRd	Rid. NRd da VEd	Mx,Ed	Mx,Rd	Rid. Mx,Rd da VEd	Rid. Mx,Rd da NEd	ρx	ρy	Verifica
47	SLU 36	0.055	1	5516	101662.9	1	-242	642783	1		0	0	Si

Verifica a presso/tenso flessione retta X SLD §§ 4.2.4.1.2.3 - 4.2.4.1.2.6 - 4.2.4.1.2.7 - 4.2.4.1.2.8 NTC18

Verifiche eseguite utilizzando la formula conservativa (6.2) §6.2.1 EN 1993-1-1:2005.

X	Comb.	Sfruttamento	Classe	NEd	NRd	Rid. NRd da VEd	Mx,Ed	Mx,Rd	Rid. Mx,Rd da VEd	Rid. Mx,Rd da NEd	ρx	ρy	Verifica
41.1	SLD 15	0.005	1	-504.9	101662.9	1	-242	642783	1		0	0	Si

Verifiche ad instabilità

Caratteristiche iniziali

Membratura principale per controllo snellezza; Calcolo di snellezze ed N critici condotti secondo gli assi principali;
Curva X: b; Curva Y: c; Svergolamento: Carico all'estradosso; Curva svergolamento: b;

Dati per instabilità attorno a x

Numero rit.	Presente	Ascissa	Campata	βx/m	Vincolo a entrambi estremi	λx/m	λVer
1	Si	0					
			1-2	1	Si	13.4	Si, (<200)
2	Si	88.1					

Dati per instabilità attorno a y

Numero rit.	Presente	Ascissa	Campata	βy/n	k,LT	kw,LT	Vincolo a entrambi estremi	λy/n	λVer
1	Si	0							
			1-2	1	1	1	Si	22.1	Si, (<200)
2	Si	88.1							

Verifica di stabilità per pressoflessione §C.4.2.4.1.3.3.2 NTC18

X	Comb.	Sfruttamento	Classe	NEd	NRk	Mx,Ed max	Mx,Rk	My,Ed max	My,Rk	χ,x	χ,y	kxx	kxy	kyx	kyy	χ,LT	Verifica
0	SLU 96	0.008	1	-737.8	106746.1	316.2	674922.6	0	323595.1	1	0.972	0.95	0.36	0.855	0.6	1	Si

Verifica di stabilità per pressoflessione SLD §C.4.2.4.1.3.3.2 NTC18

X	Comb.	Sfruttamento	Classe	NEd	NRk	Mx,Ed max	Mx,Rk	My,Ed max	My,Rk	χ,x	χ,y	kxx	kxy	kyx	kyy	χ,LT	Verifica
0	SLD 16	0.006	1	-512	106746.1	243.2	674922.6	0	323595.1	1	0.972	0.95	0.36	0.855	0.6	1	Si

Verifica di stabilità a taglio anima Y §4.2.4.1.2.4 [4.2.27] NTC18

η	hw	tw	hw/tw max	Verifica
1.2	13.4	0.6	55.46	Si

Verifica di stabilità a taglio anima Y SLD §4.2.4.1.2.4 [4.2.27] NTC18

η	hw	tw	hw/tw max	Verifica
1.2	13.4	0.6	55.46	Si

Verifiche a deformabilità

Mensola X: No; Mensola Y: No.

Frecce lungo X

Ascissa freccia	Combinazione	Freccia	Luce	L/f	L/f,min	Tipo	Verifica
44	SLE RA 1	0	88.1	10000	250	Totale	Si
44	SLE RA 31	0	88.1	10000	250	Totale	Si
85.1	SLE RA 30	0	88.1	10000	250	Totale	Si
73.4	SLE RA 29	0	88.1	10000	250	Totale	Si
73.4	SLE RA 28	0	88.1	10000	250	Totale	Si
8.8	SLE RA 2	0	88.1	10000	350	Variabile	Si
44	SLE RA 31	0	88.1	10000	350	Variabile	Si
85.1	SLE RA 30	0	88.1	10000	350	Variabile	Si
73.4	SLE RA 29	0	88.1	10000	350	Variabile	Si
73.4	SLE RA 28	0	88.1	10000	350	Variabile	Si

Frecce lungo Y

Ascissa freccia	Combinazione	Freccia	Luce	L/f	L/f,min	Tipo	Verifica
44	SLE RA 1	0	88.1	10000	250	Totale	Si
44	SLE RA 31	0	88.1	10000	250	Totale	Si
44	SLE RA 30	0	88.1	10000	250	Totale	Si
44	SLE RA 29	0	88.1	10000	250	Totale	Si
44	SLE RA 28	0	88.1	10000	250	Totale	Si
14.7	SLE RA 2	0	88.1	10000	350	Variabile	Si
14.7	SLE RA 31	0	88.1	10000	350	Variabile	Si
49.9	SLE RA 30	0	88.1	10000	350	Variabile	Si
14.7	SLE RA 29	0	88.1	10000	350	Variabile	Si
49.9	SLE RA 28	0	88.1	10000	350	Variabile	Si

Superelemento in acciaio composto dall'asta 90

Caratteristiche del materiale

Acciaio: S275, fyk = 2750

Caratteristiche geometriche

Lunghezza: 88.1
Nodo iniziale: 46 Nodo finale: 79
Cerniera iniziale: Svincolo: M2, M3 Cerniera finale: Svincolo: M2, M3
Sovraresistenza: 0% Sisma Z: No

Caratteristiche della sezione

Sezione	Rotazione	Area	Jx	Jy	ix	iy	Wx	Wy	Wplx	Wply
HEA160	0	38.82	1674.7	615.62	6.57	3.98	220.36	76.95	245.43	117.67

Verifiche di resistenza

Verifiche a forza assiale §4.2.4.1.2.1 - §4.2.4.1.2.2 NTC18

X	Comb.	Sfruttamento	Classe	NEd	Nc,Rd	Nt,Rd	Riduzione da taglio	ρx	ρy	Verifica
88.1	SLU 40	0.054		5539.5		101662.9	1	0	0	Si

Verifiche a forza assiale SLD §4.2.4.1.2.1 - §4.2.4.1.2.2 NTC18

X	Comb.	Sfruttamento	Classe	NEd	Nc,Rd	Nt,Rd	Riduzione da taglio	ρx	ρy	Verifica
0	SLD 1	0.005	1	-512	101662.9		1	0	0	Si

Verifica a taglio Y §4.2.4.1.2.4 NTC18

X	Comb.	Sfruttamento	VEd	Vc,Rd	Av	Interazione taglio-torsione	Riduzione torsione	Verifica
0	SLU 84	0.001	14.4	20045.7	13.26	Considerata	1	Si

Verifica a torsione §4.2.4.1.2.5 NTC18

X	Comb.	Sfruttamento torsione	TEd	TRd	Riduzione taglio resistente	Sfruttamento taglio-torsione	τEd,totale	τRd	Verifica
0	SLV 5	0.056	825.6	14685.6	Considerata				Si

Verifica a torsione SLD §4.2.4.1.2.5 NTC18

X	Comb.	Sfruttamento torsione	TEd	TRd	Riduzione taglio resistente	Sfruttamento taglio-torsione	τEd,totale	τRd	Verifica
0	SLD 5	0.021	313	14685.6	Considerata				Si

Verifica a presso/tenso flessione retta X §§ 4.2.4.1.2.3 - 4.2.4.1.2.6 - 4.2.4.1.2.7 - 4.2.4.1.2.8 NTC18

Verifiche eseguite utilizzando la formula conservativa (6.2) §6.2.1 EN 1993-1-1:2005.

X	Comb.	Sfruttamento	Classe	NEd	NRd	Rid. NRd da VEd	Mx,Ed	Mx,Rd	Rid. Mx,Rd da VEd	Rid. Mx,Rd da NEd	ρx	ρy	Verifica
47	SLU 7	0.055	1	5532.3	101662.9	1	-242	642783	1		0	0	Si

Verifica a presso/tenso flessione retta X SLD §§ 4.2.4.1.2.3 - 4.2.4.1.2.6 - 4.2.4.1.2.7 - 4.2.4.1.2.8 NTC18

Verifiche eseguite utilizzando la formula conservativa (6.2) §6.2.1 EN 1993-1-1:2005.

X	Comb.	Sfruttamento	Classe	NEd	NRd	Rid. NRd da VEd	Mx,Ed	Mx,Rd	Rid. Mx,Rd da VEd	Rid. Mx,Rd da NEd	ρx	ρy	Verifica
41.1	SLD 1	0.005	1	-504.9	101662.9	1	-242	642783	1		0	0	Si

Verifiche ad instabilità

Caratteristiche iniziali

Membratura principale per controllo snellezza; Calcolo di snellezze ed N critici condotti secondo gli assi principali;
Curva X: b; Curva Y: c; Svergolamento: Carico all'estradosso; Curva svergolamento: b;

Dati per instabilità attorno a x

Numero rit.	Presente	Ascissa	Campata	βx/m	Vincolo a entrambi estremi	λx/m	λVer
1	Si	0					
			1-2	1	Si	13.4	Si, (<200)
2	Si	88.1					

Dati per instabilità attorno a y

Numero rit.	Presente	Ascissa	Campata	βy/n	k,LT	kw,LT	Vincolo a entrambi estremi	λy/n	λVer
1	Si	0							
			1-2	1	1	1	Si	22.1	Si, (<200)
2	Si	88.1							

Verifica di stabilità per pressoflessione §C.4.2.4.1.3.3.2 NTC18

X	Comb.	Sfruttamento	Classe	NEd	NRk	Mx,Ed max	Mx,Rk	My,Ed max	My,Rk	χ,x	χ,y	kxx	kxy	kyx	kyy	χ,LT	Verifica
0	SLU 92	0.007	1	-611.7	106746.1	316.2	674922.6	0	323595.1	1	0.972	0.95	0.36	0.855	0.6	1	Si

Verifica di stabilità per pressoflessione SLD §C.4.2.4.1.3.3.2 NTC18

X	Comb.	Sfruttamento	Classe	NEd	NRk	Mx,Ed max	Mx,Rk	My,Ed max	My,Rk	χ,x	χ,y	kxx	kxy	kyx	kyy	χ,LT	Verifica
0	SLD 1	0.006	1	-512	106746.1	243.2	674922.6	0	323595.1	1	0.972	0.95	0.36	0.855	0.6	1	Si

Verifica di stabilità a taglio anima Y §4.2.4.1.2.4 [4.2.27] NTC18

η	hw	tw	hw/tw max	Verifica
1.2	13.4	0.6	55.46	Si

Verifica di stabilità a taglio anima Y SLD §4.2.4.1.2.4 [4.2.27] NTC18

η	hw	tw	hw/tw max	Verifica
1.2	13.4	0.6	55.46	Si

Verifiche a deformabilità

Mensola X: No; Mensola Y: No.

Frecce lungo X

Ascissa freccia	Combinazione	Freccia	Luce	L/f	L/f,min	Tipo	Verifica
44	SLE RA 1	0	88.1	10000	250	Totale	Si
67.5	SLE RA 31	0	88.1	10000	250	Totale	Si
67.5	SLE RA 30	0	88.1	10000	250	Totale	Si
67.5	SLE RA 29	0	88.1	10000	250	Totale	Si
67.5	SLE RA 28	0	88.1	10000	250	Totale	Si
8.8	SLE RA 2	0	88.1	10000	350	Variabile	Si
67.5	SLE RA 31	0	88.1	10000	350	Variabile	Si
67.5	SLE RA 30	0	88.1	10000	350	Variabile	Si
67.5	SLE RA 29	0	88.1	10000	350	Variabile	Si
67.5	SLE RA 28	0	88.1	10000	350	Variabile	Si

Frecce lungo Y

Ascissa freccia	Combinazione	Freccia	Luce	L/f	L/f,min	Tipo	Verifica
44	SLE RA 1	0	88.1	10000	250	Totale	Si
44	SLE RA 31	0	88.1	10000	250	Totale	Si
44	SLE RA 30	0	88.1	10000	250	Totale	Si
44	SLE RA 29	0	88.1	10000	250	Totale	Si
44	SLE RA 28	0	88.1	10000	250	Totale	Si
14.7	SLE RA 2	0	88.1	10000	350	Variabile	Si
14.7	SLE RA 31	0	88.1	10000	350	Variabile	Si
41.1	SLE RA 30	0	88.1	10000	350	Variabile	Si
14.7	SLE RA 29	0	88.1	10000	350	Variabile	Si
79.3	SLE RA 28	0	88.1	10000	350	Variabile	Si

Superelemento in acciaio composto dall'asta 91

Caratteristiche del materiale

Acciaio: S275, fyk = 2750

Caratteristiche geometriche

Lunghezza: 108.7
Nodo iniziale: 14 Nodo finale: 49
Cerniera iniziale: No Cerniera finale: No
Sovraresistenza: 0% Sisma Z: No

Caratteristiche della sezione

Sezione	Rotazione	Area	Jx	Jy	ix	iy	Wx	Wy	Wplx	Wply
HEA240	0	76.92	7771.3	2768.96	10.05	6	675.77	230.75	745.47	351.79

Verifiche di resistenza

Verifiche a forza assiale §4.2.4.1.2.1 - §4.2.4.1.2.2 NTC18

X	Comb.	Sfruttamento	Classe	NEd	Nc,Rd	Nt,Rd	Riduzione da taglio	ρx	ρy	Verifica
0	SLU 72	0.346	1	-69655.5	201468.8		1	0	0	Si

Verifiche a forza assiale SLD §4.2.4.1.2.1 - §4.2.4.1.2.2 NTC18

X	Comb.	Sfruttamento	Classe	NEd	Nc,Rd	Nt,Rd	Riduzione da taglio	ρx	ρy	Verifica
0	SLD 16	0.079	1	-15873.2	201468.8		1	0	0	Si

Verifica a taglio X §4.2.4.1.2.4 NTC18

X	Comb.	Sfruttamento	VEd	Vc,Rd	Av	Interazione taglio-torsione	Riduzione torsione	Verifica
108.7	SLV 9	0.004	340.8	91525.8	61.47	Considerata	0.98	Si

Verifica a taglio X SLD §4.2.4.1.2.4 NTC18

X	Comb.	Sfruttamento	VEd	Vc,Rd	Av	Interazione taglio-torsione	Riduzione torsione	Verifica
105	SLD 10	0.001	129.2	92416.3	61.47	Considerata	0.99	Si

Verifica a taglio Y §4.2.4.1.2.4 NTC18

X	Comb.	Sfruttamento	VEd	Vc,Rd	Av	Interazione taglio-torsione	Riduzione torsione	Verifica
108.7	SLU 85	0.183	-7007.5	38202.6	25.26	Considerata	1	Si

Verifica a taglio Y SLD §4.2.4.1.2.4 NTC18

X	Comb.	Sfruttamento	VEd	Vc,Rd	Av	Interazione taglio-torsione	Riduzione torsione	Verifica
108.7	SLD 1	0.05	-1889.4	38136.1	25.26	Considerata	1	Si

Verifica a torsione §4.2.4.1.2.5 NTC18

X	Comb.	Sfruttamento torsione	TEd	TRd	Riduzione taglio resistente	Sfruttamento taglio-torsione	τEd,totale	τRd	Verifica
58	SLV 5	0.038	-1469.1	38489.3	Considerata				Si

Verifica a torsione SLD §4.2.4.1.2.5 NTC18

X	Comb.	Sfruttamento torsione	TEd	TRd	Riduzione taglio resistente	Sfruttamento taglio-torsione	τEd,totale	τRd	Verifica
58	SLD 5	0.014	-557	38489.3	Considerata				Si

Verifica a presso/tenso flessione retta X §§ 4.2.4.1.2.3 - 4.2.4.1.2.6 - 4.2.4.1.2.7 - 4.2.4.1.2.8 NTC18

Verifiche eseguite utilizzando la formula conservativa (6.2) §6.2.1 EN 1993-1-1:2005.

X	Comb.	Sfruttamento	Classe	NEd	NRd	Rid. NRd da VEd	Mx,Ed	Mx,Rd	Rid. Mx,Rd da VEd	Rid. Mx,Rd da NEd	ρx	ρy	Verifica
108.7	SLU 85	0.608	1	-62072.1	201468.8	1	586218	1952423	1		0	0	Si

Verifica a presso/tenso flessione retta X SLD §§ 4.2.4.1.2.3 - 4.2.4.1.2.6 - 4.2.4.1.2.7 - 4.2.4.1.2.8 NTC18

Verifiche eseguite utilizzando la formula conservativa (6.2) §6.2.1 EN 1993-1-1:2005.

X	Comb.	Sfruttamento	Classe	NEd	NRd	Rid. NRd da VEd	Mx,Ed	Mx,Rd	Rid. Mx,Rd da VEd	Rid. Mx,Rd da NEd	ρx	ρy	Verifica
7.2	SLD 16	0.08	1	-15484.4	201468.8	1	-5191	1952423	1		0	0	Si

Verifica a presso/tenso flessione retta Y §§ 4.2.4.1.2.3 - 4.2.4.1.2.6 - 4.2.4.1.2.7 - 4.2.4.1.2.8 NTC18

Verifiche eseguite utilizzando la formula conservativa (6.2) §6.2.1 EN 1993-1-1:2005.

X	Comb.	Sfruttamento	Classe	NEd	NRd	Rid. NRd da VEd	My,Ed	My,Rd	Rid. My,Rd da VEd	Rid. My,Rd da NEd	ρx	ρy	Verifica
54.3	SLV 6	0.082	1	-12761.3	201468.8	1	17341	921364	1		0	0	Si

Verifica a presso/tenso flessione retta Y SLD §§ 4.2.4.1.2.3 - 4.2.4.1.2.6 - 4.2.4.1.2.7 - 4.2.4.1.2.8 NTC18

Verifiche eseguite utilizzando la formula conservativa (6.2) §6.2.1 EN 1993-1-1:2005.

X	Comb.	Sfruttamento	Classe	NEd	NRd	Rid. NRd da VEd	My,Ed	My,Rd	Rid. My,Rd da VEd	Rid. My,Rd da NEd	ρx	ρy	Verifica
0	SLD 9	0.079	1	-15790.2	201468.8	1	-445	921364	1		0	0	Si

Verifica a presso/tenso flessione deviata §§ 4.2.4.1.2.3 - 4.2.4.1.2.6 - 4.2.4.1.2.7 - 4.2.4.1.2.8 NTC18

Verifiche eseguite utilizzando la formula conservativa (6.2) §6.2.1 EN 1993-1-1:2005.

X	Comb.	Sfruttamento	Classe	NEd	NRd	Rid. NRd da VEd	Mx,Ed	Mx,Rd	My,Ed	My,Rd	Rid. Mx,Rd da VEd	Rid. Mx,Rd da NEd	Rid. My,Rd da VEd	Rid. My,Rd da NEd	α	β	ρx	ρy	Verifica
108.7	SLV 6	0.122	1	-9844.6	201468.8	1	66578	1952423	35857	921364	1		1				0	0	Si

Verifica a presso/tenso flessione deviata SLD §§ 4.2.4.1.2.3 - 4.2.4.1.2.6 - 4.2.4.1.2.7 - 4.2.4.1.2.8 NTC18

Verifiche eseguite utilizzando la formula conservativa (6.2) §6.2.1 EN 1993-1-1:2005.

X	Comb.	Sfruttamento	Classe	NEd	NRd	Rid. NRd da VEd	Mx,Ed	Mx,Rd	My,Ed	My,Rd	Rid. Mx,Rd da VEd	Rid. Mx,Rd da NEd	Rid. My,Rd da VEd	Rid. My,Rd da NEd	α	β	ρx	ρy	Verifica
108.7	SLD 6	0.096	1	-9885.7	201468.8	1	62638	1952423	13597	921364	1		1				0	0	Si

Verifiche ad instabilità

Caratteristiche iniziali

Membratura principale per controllo snellezza; Calcolo di snellezze ed N critici condotti secondo gli assi principali;
Curva X: b; Curva Y: c; Svergolamento: Carico all'estradosso; Curva svergolamento: b;

Dati per instabilità attorno a x

Numero rit.	Presente	Ascissa	Campata	βx/m	Vincolo a entrambi estremi	λx/m	λVer
1	Si	0					
			1-2	1	Si	10.8	Si, (<200)
2	Si	108.7					

Dati per instabilità attorno a y

Numero rit.	Presente	Ascissa	Campata	βy/n	k,LT	kw,LT	Vincolo a entrambi estremi	λy/n	λVer
1	Si	0							
			1-2	1	1	1	Si	18.1	Si, (<200)
2	Si	108.7							

Verifica di stabilità per pressoflessione §C.4.2.4.1.3.3.2 NTC18

X	Comb.	Sfruttamento	Classe	NEd	NRk	Mx,Ed max	Mx,Rk	My,Ed max	My,Rk	χ,x	χ,y	kxx	kxy	kyx	kyy	χ,LT	Verifica
0	SLU 73	0.59	1	-69655.5	211542.2	586217.5	2050044	13.1	967432.2	1	0.996	0.526	0.341	0.809	0.568	1	Si

Verifica di stabilità per pressoflessione SLD §C.4.2.4.1.3.3.2 NTC18

X	Comb.	Sfruttamento	Classe	NEd	NRk	Mx,Ed max	Mx,Rk	My,Ed max	My,Rk	χ,x	χ,y	kxx	kxy	kyx	kyy	χ,LT	Verifica
0	SLD 6	0.113	1	-15719.1	211542.2	62637.8	2050044	13596.7	967432.2	1	0.996	0.398	0.347	0.809	0.578	1	Si

Verifica di stabilità a taglio anima Y §4.2.4.1.2.4 [4.2.27] NTC18

η	hw	tw	hw/tw max	Verifica
1.2	20.6	0.8	55.46	Si

Verifica di stabilità a taglio anima Y SLD §4.2.4.1.2.4 [4.2.27] NTC18

η	hw	tw	hw/tw max	Verifica
1.2	20.6	0.8	55.46	Si

Verifiche a deformabilità

Mensola X: No; Mensola Y: No.

Frecce lungo X

Ascissa freccia	Combinazione	Freccia	Luce	L/f	L/f,min	Tipo	Verifica
61.6	SLE RA 1	0	108.7	10000	250	Totale	Si
65.2	SLE RA 31	0	108.7	10000	250	Totale	Si
61.6	SLE RA 30	0	108.7	10000	250	Totale	Si
65.2	SLE RA 29	0	108.7	10000	250	Totale	Si
61.6	SLE RA 28	0	108.7	10000	250	Totale	Si
61.6	SLE RA 2	0	108.7	10000	350	Variabile	Si
58	SLE RA 31	0	108.7	10000	350	Variabile	Si
61.6	SLE RA 30	0	108.7	10000	350	Variabile	Si
58	SLE RA 29	0	108.7	10000	350	Variabile	Si
61.6	SLE RA 28	0	108.7	10000	350	Variabile	Si

Frecce lungo Y

Ascissa freccia	Combinazione	Freccia	Luce	L/f	L/f,min	Tipo	Verifica
65.2	SLE RA 19	0.014	108.7	7990.9	250	Totale	Si
65.2	SLE RA 18	0.014	108.7	7990.9	250	Totale	Si
65.2	SLE RA 7	0.014	108.7	7990.9	250	Totale	Si
65.2	SLE RA 6	0.014	108.7	7990.9	250	Totale	Si
65.2	SLE RA 15	0.013	108.7	8079.2	250	Totale	Si
61.6	SLE RA 19	0.016	108.7	6901.4	350	Variabile	Si
61.6	SLE RA 18	0.016	108.7	6901.4	350	Variabile	Si
61.6	SLE RA 7	0.016	108.7	6901.4	350	Variabile	Si
61.6	SLE RA 6	0.016	108.7	6901.4	350	Variabile	Si
61.6	SLE RA 15	0.016	108.7	6967.2	350	Variabile	Si

Superelemento in acciaio composto dall'asta 92

Caratteristiche del materiale

Acciaio: S275, fyk = 2750

Caratteristiche geometriche

Lunghezza: 108.7
Nodo iniziale: 15 Nodo finale: 52
Cerniera iniziale: No Cerniera finale: No
Sovraresistenza: 0% Sisma Z: No

Caratteristiche della sezione

Sezione	Rotazione	Area	Jx	Jy	ix	iy	Wx	Wy	Wplx	Wply
HEA240	0	76.92	7771.3	2768.96	10.05	6	675.77	230.75	745.47	351.79

Verifiche di resistenza

Verifiche a forza assiale §4.2.4.1.2.1 - §4.2.4.1.2.2 NTC18

X	Comb.	Sfruttamento	Classe	NEd	Nc,Rd	Nt,Rd	Riduzione da taglio	ρx	ρy	Verifica
0	SLU 72	0.346	1	-69655.5	201468.8		1	0	0	Si

Verifiche a forza assiale SLD §4.2.4.1.2.1 - §4.2.4.1.2.2 NTC18

X	Comb.	Sfruttamento	Classe	NEd	Nc,Rd	Nt,Rd	Riduzione da taglio	ρx	ρy	Verifica
0	SLD 4	0.079	1	-15873.2	201468.8		1	0	0	Si

Verifica a taglio X §4.2.4.1.2.4 NTC18

X	Comb.	Sfruttamento	VEd	Vc,Rd	Av	Interazione taglio-torsione	Riduzione torsione	Verifica
90.5	SLV 5	0.004	-340.8	91525.8	61.47	Considerata	0.98	Si

Verifica a taglio X SLD §4.2.4.1.2.4 NTC18

X	Comb.	Sfruttamento	VEd	Vc,Rd	Av	Interazione taglio-torsione	Riduzione torsione	Verifica
90.5	SLD 5	0.001	-129.2	92416.3	61.47	Considerata	0.99	Si

Verifica a taglio Y §4.2.4.1.2.4 NTC18

X	Comb.	Sfruttamento	VEd	Vc,Rd	Av	Interazione taglio-torsione	Riduzione torsione	Verifica
108.7	SLU 118	0.183	-7007.5	38202.6	25.26	Considerata	1	Si

Verifica a taglio Y SLD §4.2.4.1.2.4 NTC18

X	Comb.	Sfruttamento	VEd	Vc,Rd	Av	Interazione taglio-torsione	Riduzione torsione	Verifica
108.7	SLD 13	0.05	-1889.4	38136.1	25.26	Considerata	1	Si

Verifica a torsione §4.2.4.1.2.5 NTC18

X	Comb.	Sfruttamento torsione	TEd	TRd	Riduzione taglio resistente	Sfruttamento taglio-torsione	τEd,totale	τRd	Verifica
108.7	SLV 10	0.038	1469.1	38489.3	Considerata				Si

Verifica a torsione SLD §4.2.4.1.2.5 NTC18

X	Comb.	Sfruttamento torsione	TEd	TRd	Riduzione taglio resistente	Sfruttamento taglio-torsione	τEd,totale	τRd	Verifica
108.7	SLD 10	0.014	557	38489.3	Considerata				Si

Verifica a presso/tenso flessione retta X §§ 4.2.4.1.2.3 - 4.2.4.1.2.6 - 4.2.4.1.2.7 - 4.2.4.1.2.8 NTC18

Verifiche eseguite utilizzando la formula conservativa (6.2) §6.2.1 EN 1993-1-1:2005.

X	Comb.	Sfruttamento	Classe	NEd	NRd	Rid. NRd da VEd	Mx,Ed	Mx,Rd	Rid. Mx,Rd da VEd	Rid. Mx,Rd da NEd	ρx	ρy	Verifica
108.7	SLU 118	0.608	1	-62072.1	201468.8	1	586218	1952423	1		0	0	Si

Verifica a presso/tenso flessione retta X SLD §§ 4.2.4.1.2.3 - 4.2.4.1.2.6 - 4.2.4.1.2.7 - 4.2.4.1.2.8 NTC18

Verifiche eseguite utilizzando la formula conservativa (6.2) §6.2.1 EN 1993-1-1:2005.

X	Comb.	Sfruttamento	Classe	NEd	NRd	Rid. NRd da VEd	Mx,Ed	Mx,Rd	Rid. Mx,Rd da VEd	Rid. Mx,Rd da NEd	ρx	ρy	Verifica
7.2	SLD 3	0.08	1	-15484.4	201468.8	1	-5191	1952423	1		0	0	Si

Verifica a presso/tenso flessione retta Y §§ 4.2.4.1.2.3 - 4.2.4.1.2.6 - 4.2.4.1.2.7 - 4.2.4.1.2.8 NTC18

Verifiche eseguite utilizzando la formula conservativa (6.2) §6.2.1 EN 1993-1-1:2005.

X	Comb.	Sfruttamento	Classe	NEd	NRd	Rid. NRd da VEd	My,Ed	My,Rd	Rid. My,Rd da VEd	Rid. My,Rd da NEd	ρx	ρy	Verifica
54.3	SLV 10	0.082	1	-12761.3	201468.8	1	-17341	921364	1		0	0	Si

Verifica a presso/tenso flessione retta Y SLD §§ 4.2.4.1.2.3 - 4.2.4.1.2.6 - 4.2.4.1.2.7 - 4.2.4.1.2.8 NTC18

Verifiche eseguite utilizzando la formula conservativa (6.2) §6.2.1 EN 1993-1-1:2005.

X	Comb.	Sfruttamento	Classe	NEd	NRd	Rid. NRd da VEd	My,Ed	My,Rd	Rid. My,Rd da VEd	Rid. My,Rd da NEd	ρx	ρy	Verifica
0	SLD 5	0.079	1	-15790.2	201468.8	1	445	921364	1		0	0	Si

Verifica a presso/tenso flessione deviata §§ 4.2.4.1.2.3 - 4.2.4.1.2.6 - 4.2.4.1.2.7 - 4.2.4.1.2.8 NTC18

Verifiche eseguite utilizzando la formula conservativa (6.2) §6.2.1 EN 1993-1-1:2005.

X	Comb.	Sfruttamento	Classe	NEd	NRd	Rid. NRd da VEd	Mx,Ed	Mx,Rd	My,Ed	My,Rd	Rid. Mx,Rd da VEd	Rid. Mx,Rd da NEd	Rid. My,Rd da VEd	Rid. My,Rd da NEd	α	β	ρx	ρy	Verifica
108.7	SLV 9	0.122	1	-9844.6	201468.8	1	66578	1952423	-35857	921364	1		1				0	0	Si

Verifica a presso/tenso flessione deviata SLD §§ 4.2.4.1.2.3 - 4.2.4.1.2.6 - 4.2.4.1.2.7 - 4.2.4.1.2.8 NTC18

Verifiche eseguite utilizzando la formula conservativa (6.2) §6.2.1 EN 1993-1-1:2005.

X	Comb.	Sfruttamento	Classe	NEd	NRd	Rid. NRd da VEd	Mx,Ed	Mx,Rd	My,Ed	My,Rd	Rid. Mx,Rd da VEd	Rid. Mx,Rd da NEd	Rid. My,Rd da VEd	Rid. My,Rd da NEd	α	β	ρx	ρy	Verifica
108.7	SLD 9	0.096	1	-9885.7	201468.8	1	62638	1952423	-13597	921364	1		1				0	0	Si

Verifiche ad instabilità

Caratteristiche iniziali

Membratura principale per controllo snellezza; Calcolo di snellezze ed N critici condotti secondo gli assi principali;
Curva X: b; Curva Y: c; Svergolamento: Carico all'estradosso; Curva svergolamento: b;

Dati per instabilità attorno a x

Numero rit.	Presente	Ascissa	Campata	βx/m	Vincolo a entrambi estremi	λx/m	λVer
1	Si	0					
			1-2	1	Si	10.8	Si, (<200)
2	Si	108.7					

Dati per instabilità attorno a y

Numero rit.	Presente	Ascissa	Campata	βy/n	k,LT	kw,LT	Vincolo a entrambi estremi	λy/n	λVer
1	Si	0							
			1-2	1	1	1	Si	18.1	Si, (<200)
2	Si	108.7							

Verifica di stabilità per pressoflessione §C.4.2.4.1.3.3.2 NTC18

X	Comb.	Sfruttamento	Classe	NEd	NRk	Mx,Ed max	Mx,Rk	My,Ed max	My,Rk	χ,x	χ,y	kxx	kxy	kyx	kyy	χ,LT	Verifica
0	SLU 73	0.59	1	-69655.5	211542.2	586217.6	2050044	13.1	967432.2	1	0.996	0.526	0.341	0.809	0.568	1	Si

Verifica di stabilità per pressoflessione SLD §C.4.2.4.1.3.3.2 NTC18

X	Comb.	Sfruttamento	Classe	NEd	NRk	Mx,Ed max	Mx,Rk	My,Ed max	My,Rk	χ,x	χ,y	kxx	kxy	kyx	kyy	χ,LT	Verifica
0	SLD 9	0.113	1	-15719.1	211542.2	62637.8	2050044	13596.7	967432.2	1	0.996	0.398	0.347	0.809	0.578	1	Si

Verifica di stabilità a taglio anima Y §4.2.4.1.2.4 [4.2.27] NTC18

η	hw	tw	hw/tw max	Verifica
1.2	20.6	0.8	55.46	Si

Verifica di stabilità a taglio anima Y SLD §4.2.4.1.2.4 [4.2.27] NTC18

η	hw	tw	hw/tw max	Verifica
1.2	20.6	0.8	55.46	Si

Verifiche a deformabilità

Mensola X: No; Mensola Y: No.

Frecce lungo X

Ascissa freccia	Combinazione	Freccia	Luce	L/f	L/f,min	Tipo	Verifica
61.6	SLE RA 1	0	108.7	10000	250	Totale	Si
65.2	SLE RA 31	0	108.7	10000	250	Totale	Si
61.6	SLE RA 30	0	108.7	10000	250	Totale	Si
65.2	SLE RA 29	0	108.7	10000	250	Totale	Si
61.6	SLE RA 28	0	108.7	10000	250	Totale	Si
61.6	SLE RA 2	0	108.7	10000	350	Variabile	Si
58	SLE RA 31	0	108.7	10000	350	Variabile	Si
61.6	SLE RA 30	0	108.7	10000	350	Variabile	Si
58	SLE RA 29	0	108.7	10000	350	Variabile	Si
61.6	SLE RA 28	0	108.7	10000	350	Variabile	Si

Frecce lungo Y

Ascissa freccia	Combinazione	Freccia	Luce	L/f	L/f,min	Tipo	Verifica
65.2	SLE RA 19	0.014	108.7	7990.9	250	Totale	Si
65.2	SLE RA 18	0.014	108.7	7990.9	250	Totale	Si
65.2	SLE RA 7	0.014	108.7	7990.9	250	Totale	Si
65.2	SLE RA 6	0.014	108.7	7990.9	250	Totale	Si
65.2	SLE RA 15	0.013	108.7	8079.2	250	Totale	Si
61.6	SLE RA 19	0.016	108.7	6901.3	350	Variabile	Si
61.6	SLE RA 18	0.016	108.7	6901.4	350	Variabile	Si
61.6	SLE RA 7	0.016	108.7	6901.4	350	Variabile	Si
61.6	SLE RA 6	0.016	108.7	6901.4	350	Variabile	Si
61.6	SLE RA 15	0.016	108.7	6967.2	350	Variabile	Si

Superelemento in acciaio composto dall'asta 93

Caratteristiche del materiale

Acciaio: S275, fyk = 2750

Caratteristiche geometriche

Lunghezza: 74.7
Nodo iniziale: 49 Nodo finale: 81
Cerniera iniziale: No Cerniera finale: No
Sovraresistenza: 0% Sisma Z: No

Caratteristiche della sezione

Sezione	Rotazione	Area	Jx	Jy	ix	iy	Wx	Wy	Wplx	Wply
HEA240	0	76.92	7771.3	2768.96	10.05	6	675.77	230.75	745.47	351.79

Verifiche di resistenza

Verifiche a forza assiale §4.2.4.1.2.1 - §4.2.4.1.2.2 NTC18

X	Comb.	Sfruttamento	Classe	NEd	Nc,Rd	Nt,Rd	Riduzione da taglio	ρx	ρy	Verifica
0	SLU 118	0.416	1	-83801.4	201468.8		1	0	0	Si

Verifiche a forza assiale SLD §4.2.4.1.2.1 - §4.2.4.1.2.2 NTC18

X	Comb.	Sfruttamento	Classe	NEd	Nc,Rd	Nt,Rd	Riduzione da taglio	ρx	ρy	Verifica
0	SLD 13	0.061	1	-12293.3	201468.8		1	0	0	Si

Verifica a taglio X §4.2.4.1.2.4 NTC18

X	Comb.	Sfruttamento	VEd	Vc,Rd	Av	Interazione taglio-torsione	Riduzione torsione	Verifica
74.7	SLV 10	0.006	-461.6	80839.5	61.47	Considerata	0.87	Si

Verifica a taglio X SLD §4.2.4.1.2.4 NTC18

X	Comb.	Sfruttamento	VEd	Vc,Rd	Av	Interazione taglio-torsione	Riduzione torsione	Verifica
0	SLD 9	0.002	-175.1	88556.6	61.47	Considerata	0.95	Si

Verifica a taglio Y §4.2.4.1.2.4 NTC18

X	Comb.	Sfruttamento	VEd	Vc,Rd	Av	Interazione taglio-torsione	Riduzione torsione	Verifica
74.7	SLU 114	0.067	-2547	38202.6	25.26	Considerata	1	Si

Verifica a taglio Y SLD §4.2.4.1.2.4 NTC18

X	Comb.	Sfruttamento	VEd	Vc,Rd	Av	Interazione taglio-torsione	Riduzione torsione	Verifica
0	SLD 5	0.048	1729.6	36394.5	25.26	Considerata	0.95	Si

Verifica a torsione §4.2.4.1.2.5 NTC18

X	Comb.	Sfruttamento torsione	TEd	TRd	Riduzione taglio resistente	Sfruttamento taglio-torsione	τEd,totale	τRd	Verifica
74.7	SLV 10	0.305	11724.9	38489.3	Considerata				Si

Verifica a torsione SLD §4.2.4.1.2.5 NTC18

X	Comb.	Sfruttamento torsione	TEd	TRd	Riduzione taglio resistente	Sfruttamento taglio-torsione	τEd,totale	τRd	Verifica
74.7	SLD 10	0.116	4446.3	38489.3	Considerata				Si

Verifica a presso/tenso flessione retta X §§ 4.2.4.1.2.3 - 4.2.4.1.2.6 - 4.2.4.1.2.7 - 4.2.4.1.2.8 NTC18

Verifiche eseguite utilizzando la formula conservativa (6.2) §6.2.1 EN 1993-1-1:2005.

X	Comb.	Sfruttamento	Classe	NEd	NRd	Rid. NRd da VEd	Mx,Ed	Mx,Rd	Rid. Mx,Rd da VEd	Rid. Mx,Rd da NEd	ρx	ρy	Verifica
0	SLU 118	0.716	1	-83801.4	201468.8	1	586325	1952423	1		0	0	Si

Verifica a presso/tenso flessione retta X SLD §§ 4.2.4.1.2.3 - 4.2.4.1.2.6 - 4.2.4.1.2.7 - 4.2.4.1.2.8 NTC18

Verifiche eseguite utilizzando la formula conservativa (6.2) §6.2.1 EN 1993-1-1:2005.

X	Comb.	Sfruttamento	Classe	NEd	NRd	Rid. NRd da VEd	Mx,Ed	Mx,Rd	Rid. Mx,Rd da VEd	Rid. Mx,Rd da NEd	ρx	ρy	Verifica
72.2	SLD 4	0.074	1	-8991.5	201468.8	1	56990	1952423	1		0	0	Si

Verifica a presso/tenso flessione deviata §§ 4.2.4.1.2.3 - 4.2.4.1.2.6 - 4.2.4.1.2.7 - 4.2.4.1.2.8 NTC18

Verifiche eseguite utilizzando la formula conservativa (6.2) §6.2.1 EN 1993-1-1:2005.

X	Comb.	Sfruttamento	Classe	NEd	NRd	Rid. NRd da VEd	Mx,Ed	Mx,Rd	My,Ed	My,Rd	Rid. Mx,Rd da VEd	Rid. Mx,Rd da NEd	Rid. My,Rd da VEd	Rid. My,Rd da NEd	α	β	ρx	ρy	Verifica
0	SLV 6	0.127	1	-11896.2	201468.8	1	66582	1952423	31399	921364	1		1				0	0	Si

Verifica a presso/tenso flessione deviata SLD §§ 4.2.4.1.2.3 - 4.2.4.1.2.6 - 4.2.4.1.2.7 - 4.2.4.1.2.8 NTC18

Verifiche eseguite utilizzando la formula conservativa (6.2) §6.2.1 EN 1993-1-1:2005.

X	Comb.	Sfruttamento	Classe	NEd	NRd	Rid. NRd da VEd	Mx,Ed	Mx,Rd	My,Ed	My,Rd	Rid. Mx,Rd da VEd	Rid. Mx,Rd da NEd	Rid. My,Rd da VEd	Rid. My,Rd da NEd	α	β	ρx	ρy	Verifica
0	SLD 6	0.104	1	-11979.8	201468.8	1	62641	1952423	11906	921364	1		1				0	0	Si

Verifiche ad instabilità

Caratteristiche iniziali

Membratura principale per controllo snellezza; Calcolo di snellezze ed N critici condotti secondo gli assi principali;
Curva X: b; Curva Y: c; Svergolamento: Carico all'estradosso; Curva svergolamento: b;

Dati per instabilità attorno a x

Numero rit.	Presente	Ascissa	Campata	βx/m	Vincolo a entrambi estremi	λx/m	λVer
1	Si	0					
			1-2	1	Si	7.4	Si, (<200)
2	Si	74.7					

Dati per instabilità attorno a y

Numero rit.	Presente	Ascissa	Campata	βy/n	k,LT	kw,LT	Vincolo a entrambi estremi	λy/n	λVer
1	Si	0							
			1-2	1	1	1	Si	12.5	Si, (<200)
2	Si	74.7							

Verifica di stabilità per pressoflessione §C.4.2.4.1.3.3.2 NTC18

X	Comb.	Sfruttamento	Classe	NEd	NRk	Mx,Ed max	Mx,Rk	My,Ed max	My,Rk	χ,x	χ,y	kxx	kxy	kyx	kyy	χ,LT	Verifica
0	SLU 85	0.696	1	-83801.4	211542.2	619327.8	2050044	11.8	967432.2	1	1	0.884	0.507	0.743	0.846	1	Si

Verifica di stabilità per pressoflessione SLD §C.4.2.4.1.3.3.2 NTC18

X	Comb.	Sfruttamento	Classe	NEd	NRk	Mx,Ed max	Mx,Rk	My,Ed max	My,Rk	χ,x	χ,y	kxx	kxy	kyx	kyy	χ,LT	Verifica
0	SLD 7	0.09	1	-11979.8	211542.2	62640.9	2050044	11901.5	967432.2	1	1	0.557	0.33	0.743	0.55	1	Si

Verifica di stabilità a taglio anima Y §4.2.4.1.2.4 [4.2.27] NTC18

η	hw	tw	hw/tw max	Verifica
1.2	20.6	0.8	55.46	Si

Verifica di stabilità a taglio anima Y SLD §4.2.4.1.2.4 [4.2.27] NTC18

η	hw	tw	hw/tw max	Verifica
1.2	20.6	0.8	55.46	Si

Verifiche a deformabilità

Mensola X: No; Mensola Y: No.

Frecce lungo X

Ascissa freccia	Combinazione	Freccia	Luce	L/f	L/f,min	Tipo	Verifica
54.8	SLE RA 1	0	74.7	10000	250	Totale	Si
42.3	SLE RA 31	0	74.7	10000	250	Totale	Si
52.3	SLE RA 30	0	74.7	10000	250	Totale	Si
42.3	SLE RA 29	0	74.7	10000	250	Totale	Si
52.3	SLE RA 28	0	74.7	10000	250	Totale	Si
32.4	SLE RA 2	0	74.7	10000	350	Variabile	Si
42.3	SLE RA 31	0	74.7	10000	350	Variabile	Si
52.3	SLE RA 30	0	74.7	10000	350	Variabile	Si
42.3	SLE RA 29	0	74.7	10000	350	Variabile	Si
52.3	SLE RA 28	0	74.7	10000	350	Variabile	Si

Frecce lungo Y

Ascissa freccia	Combinazione	Freccia	Luce	L/f	L/f,min	Tipo	Verifica
37.4	SLE RA 19	0.014	74.7	5287	250	Totale	Si
37.4	SLE RA 18	0.014	74.7	5287	250	Totale	Si
37.4	SLE RA 7	0.014	74.7	5287	250	Totale	Si
37.4	SLE RA 6	0.014	74.7	5287	250	Totale	Si
37.4	SLE RA 15	0.014	74.7	5338.5	250	Totale	Si
37.4	SLE RA 19	0.015	74.7	4939.7	350	Variabile	Si
37.4	SLE RA 18	0.015	74.7	4939.7	350	Variabile	Si
37.4	SLE RA 7	0.015	74.7	4939.7	350	Variabile	Si
37.4	SLE RA 6	0.015	74.7	4939.7	350	Variabile	Si
37.4	SLE RA 15	0.015	74.7	4984.7	350	Variabile	Si

Superelemento in acciaio composto dall'asta 94

Caratteristiche del materiale

Acciaio: S275, fyk = 2750

Caratteristiche geometriche

Lunghezza: 74.7
Nodo iniziale: 52 Nodo finale: 82
Cerniera iniziale: No Cerniera finale: No
Sovraresistenza: 0% Sisma Z: No

Caratteristiche della sezione

Sezione	Rotazione	Area	Jx	Jy	ix	iy	Wx	Wy	Wplx	Wply
HEA240	0	76.92	7771.3	2768.96	10.05	6	675.77	230.75	745.47	351.79

Verifiche di resistenza

Verifiche a forza assiale §4.2.4.1.2.1 - §4.2.4.1.2.2 NTC18

X	Comb.	Sfruttamento	Classe	NEd	Nc,Rd	Nt,Rd	Riduzione da taglio	ρx	ρy	Verifica
0	SLU 118	0.416	1	-83801.4	201468.8		1	0	0	Si

Verifiche a forza assiale SLD §4.2.4.1.2.1 - §4.2.4.1.2.2 NTC18

X	Comb.	Sfruttamento	Classe	NEd	Nc,Rd	Nt,Rd	Riduzione da taglio	ρx	ρy	Verifica
0	SLD 1	0.061	1	-12293.3	201468.8		1	0	0	Si

Verifica a taglio X §4.2.4.1.2.4 NTC18

X	Comb.	Sfruttamento	VEd	Vc,Rd	Av	Interazione taglio-torsione	Riduzione torsione	Verifica
39.8	SLV 5	0.006	461.6	80839.5	61.47	Considerata	0.87	Si

Verifica a taglio X SLD §4.2.4.1.2.4 NTC18

X	Comb.	Sfruttamento	VEd	Vc,Rd	Av	Interazione taglio-torsione	Riduzione torsione	Verifica
0	SLD 5	0.002	175.1	88556.6	61.47	Considerata	0.95	Si

Verifica a taglio Y §4.2.4.1.2.4 NTC18

X	Comb.	Sfruttamento	VEd	Vc,Rd	Av	Interazione taglio-torsione	Riduzione torsione	Verifica
74.7	SLU 114	0.067	-2547	38202.6	25.26	Considerata	1	Si

Verifica a taglio Y SLD §4.2.4.1.2.4 NTC18

X	Comb.	Sfruttamento	VEd	Vc,Rd	Av	Interazione taglio-torsione	Riduzione torsione	Verifica
0	SLD 9	0.048	1729.6	36394.5	25.26	Considerata	0.95	Si

Verifica a torsione §4.2.4.1.2.5 NTC18

X	Comb.	Sfruttamento torsione	TEd	TRd	Riduzione taglio resistente	Sfruttamento taglio-torsione	τEd,totale	τRd	Verifica
39.8	SLV 5	0.305	-11724.9	38489.3	Considerata				Si

Verifica a torsione SLD §4.2.4.1.2.5 NTC18

X	Comb.	Sfruttamento torsione	TEd	TRd	Riduzione taglio resistente	Sfruttamento taglio-torsione	τEd,totale	τRd	Verifica
39.8	SLD 5	0.116	-4446.3	38489.3	Considerata				Si

Verifica a presso/tenso flessione retta X §§ 4.2.4.1.2.3 - 4.2.4.1.2.6 - 4.2.4.1.2.7 - 4.2.4.1.2.8 NTC18

Verifiche eseguite utilizzando la formula conservativa (6.2) §6.2.1 EN 1993-1-1:2005.

X	Comb.	Sfruttamento	Classe	NEd	NRd	Rid. NRd da VEd	Mx,Ed	Mx,Rd	Rid. Mx,Rd da VEd	Rid. Mx,Rd da NEd	ρx	ρy	Verifica
0	SLU 118	0.716	1	-83801.4	201468.8	1	586325	1952423	1		0	0	Si

Verifica a presso/tenso flessione retta X SLD §§ 4.2.4.1.2.3 - 4.2.4.1.2.6 - 4.2.4.1.2.7 - 4.2.4.1.2.8 NTC18

Verifiche eseguite utilizzando la formula conservativa (6.2) §6.2.1 EN 1993-1-1:2005.

X	Comb.	Sfruttamento	Classe	NEd	NRd	Rid. NRd da VEd	Mx,Ed	Mx,Rd	Rid. Mx,Rd da VEd	Rid. Mx,Rd da NEd	ρx	ρy	Verifica
72.2	SLD 16	0.074	1	-8991.5	201468.8	1	56990	1952423	1		0	0	Si

Verifica a presso/tenso flessione deviata §§ 4.2.4.1.2.3 - 4.2.4.1.2.6 - 4.2.4.1.2.7 - 4.2.4.1.2.8 NTC18

Verifiche eseguite utilizzando la formula conservativa (6.2) §6.2.1 EN 1993-1-1:2005.

X	Comb.	Sfruttamento	Classe	NEd	NRd	Rid. NRd da VEd	Mx,Ed	Mx,Rd	My,Ed	My,Rd	Rid. Mx,Rd da VEd	Rid. Mx,Rd da NEd	Rid. My,Rd da VEd	Rid. My,Rd da NEd	α	β	ρx	ρy	Verifica
0	SLV 10	0.127	1	-11896.2	201468.8	1	66582	1952423	-31399	921364	1		1				0	0	Si

Verifica a presso/tenso flessione deviata SLD §§ 4.2.4.1.2.3 - 4.2.4.1.2.6 - 4.2.4.1.2.7 - 4.2.4.1.2.8 NTC18

Verifiche eseguite utilizzando la formula conservativa (6.2) §6.2.1 EN 1993-1-1:2005.

X	Comb.	Sfruttamento	Classe	NEd	NRd	Rid. NRd da VEd	Mx,Ed	Mx,Rd	My,Ed	My,Rd	Rid. Mx,Rd da VEd	Rid. Mx,Rd da NEd	Rid. My,Rd da VEd	Rid. My,Rd da NEd	α	β	ρx	ρy	Verifica
0	SLD 10	0.104	1	-11979.8	201468.8	1	62641	1952423	-11906	921364	1		1				0	0	Si

Verifiche ad instabilità

Caratteristiche iniziali

Membratura principale per controllo snellezza; Calcolo di snellezze ed N critici condotti secondo gli assi principali;
Curva X: b; Curva Y: c; Svergolamento: Carico all'estradosso; Curva svergolamento: b;

Dati per instabilità attorno a x

Numero rit.	Presente	Ascissa	Campata	βx/m	Vincolo a entrambi estremi	λx/m	λVer
1	Si	0					
			1-2	1	Si	7.4	Si, (<200)
2	Si	74.7					

Dati per instabilità attorno a y

Numero rit.	Presente	Ascissa	Campata	βy/n	k,LT	kw,LT	Vincolo a entrambi estremi	λy/n	λVer
1	Si	0							
			1-2	1	1	1	Si	12.5	Si, (<200)
2	Si	74.7							

Verifica di stabilità per pressoflessione §C.4.2.4.1.3.3.2 NTC18

X	Comb.	Sfruttamento	Classe	NEd	NRk	Mx,Ed max	Mx,Rk	My,Ed max	My,Rk	χ,x	χ,y	kxx	kxy	kyx	kyy	χ,LT	Verifica
0	SLU 85	0.696	1	-83801.4	211542.2	619328.8	2050044	11.9	967432.2	1	1	0.884	0.508	0.743	0.846	1	Si

Verifica di stabilità per pressoflessione SLD §C.4.2.4.1.3.3.2 NTC18

X	Comb.	Sfruttamento	Classe	NEd	NRk	Mx,Ed max	Mx,Rk	My,Ed max	My,Rk	χ,x	χ,y	kxx	kxy	kyx	kyy	χ,LT	Verifica
0	SLD 12	0.09	1	-11979.8	211542.2	62640.9	2050044	11901.5	967432.2	1	1	0.557	0.33	0.743	0.55	1	Si

Verifica di stabilità a taglio anima Y §4.2.4.1.2.4 [4.2.27] NTC18

η	hw	tw	hw/tw max	Verifica
1.2	20.6	0.8	55.46	Si

Verifica di stabilità a taglio anima Y SLD §4.2.4.1.2.4 [4.2.27] NTC18

η	hw	tw	hw/tw max	Verifica
1.2	20.6	0.8	55.46	Si

Verifiche a deformabilità

Mensola X: No; Mensola Y: No.

Frecce lungo X

Ascissa freccia	Combinazione	Freccia	Luce	L/f	L/f,min	Tipo	Verifica
54.8	SLE RA 1	0	74.7	10000	250	Totale	Si

Ascissa freccia	Combinazione	Freccia	Luce	L/f	L/f,min	Tipo	Verifica
42.3	SLE RA 31	0	74.7	10000	250	Totale	Si
52.3	SLE RA 30	0	74.7	10000	250	Totale	Si
42.3	SLE RA 29	0	74.7	10000	250	Totale	Si
52.3	SLE RA 28	0	74.7	10000	250	Totale	Si
32.4	SLE RA 2	0	74.7	10000	350	Variabile	Si
42.3	SLE RA 31	0	74.7	10000	350	Variabile	Si
52.3	SLE RA 30	0	74.7	10000	350	Variabile	Si
42.3	SLE RA 29	0	74.7	10000	350	Variabile	Si
52.3	SLE RA 28	0	74.7	10000	350	Variabile	Si

Frecce lungo Y

Ascissa freccia	Combinazione	Freccia	Luce	L/f	L/f,min	Tipo	Verifica
37.4	SLE RA 19	0.014	74.7	5287	250	Totale	Si
37.4	SLE RA 18	0.014	74.7	5287	250	Totale	Si
37.4	SLE RA 7	0.014	74.7	5287	250	Totale	Si
37.4	SLE RA 6	0.014	74.7	5287	250	Totale	Si
37.4	SLE RA 15	0.014	74.7	5338.5	250	Totale	Si
37.4	SLE RA 19	0.015	74.7	4939.7	350	Variabile	Si
37.4	SLE RA 18	0.015	74.7	4939.7	350	Variabile	Si
37.4	SLE RA 7	0.015	74.7	4939.7	350	Variabile	Si
37.4	SLE RA 6	0.015	74.7	4939.7	350	Variabile	Si
37.4	SLE RA 15	0.015	74.7	4984.7	350	Variabile	Si

Superelemento in acciaio composto dall'asta 95

Caratteristiche del materiale

Acciaio: S275, fyk = 2750

Caratteristiche geometriche

Lunghezza: 78.5
Nodo iniziale: 81 Nodo finale: 103
Cerniera iniziale: No Cerniera finale: No
Sovraresistenza: 0% Sisma Z: No

Caratteristiche della sezione

Sezione	Rotazione	Area	Jx	Jy	ix	iy	Wx	Wy	Wplx	Wply
HEA240	0	76.92	7771.3	2768.96	10.05	6	675.77	230.75	745.47	351.79

Verifiche di resistenza

Verifiche a forza assiale §4.2.4.1.2.1 - §4.2.4.1.2.2 NTC18

X	Comb.	Sfruttamento	Classe	NEd	Nc,Rd	Nt,Rd	Riduzione da taglio	ρx	ρy	Verifica
0	SLU 118	0.391	1	-78856.6	201468.8		1	0	0	Si

Verifiche a forza assiale SLD §4.2.4.1.2.1 - §4.2.4.1.2.2 NTC18

X	Comb.	Sfruttamento	Classe	NEd	Nc,Rd	Nt,Rd	Riduzione da taglio	ρx	ρy	Verifica
0	SLD 13	0.046	1	-9356.4	201468.8		1	0	0	Si

Verifica a taglio X §4.2.4.1.2.4 NTC18

X	Comb.	Sfruttamento	VEd	Vc,Rd	Av	Interazione taglio-torsione	Riduzione torsione	Verifica
78.5	SLV 11	0.004	344.8	83198.2	61.47	Considerata	0.9	Si

Verifica a taglio X SLD §4.2.4.1.2.4 NTC18

X	Comb.	Sfruttamento	VEd	Vc,Rd	Av	Interazione taglio-torsione	Riduzione torsione	Verifica
78.5	SLD 12	0.001	130.7	89381.9	61.47	Considerata	0.96	Si

Verifica a taglio Y §4.2.4.1.2.4 NTC18

X	Comb.	Sfruttamento	VEd	Vc,Rd	Av	Interazione taglio-torsione	Riduzione torsione	Verifica
0	SLU 72	0.439	16773.3	38202.6	25.26	Considerata	1	Si

Verifica a taglio Y SLD §4.2.4.1.2.4 NTC18

X	Comb.	Sfruttamento	VEd	Vc,Rd	Av	Interazione taglio-torsione	Riduzione torsione	Verifica
0	SLD 1	0.053	1996.2	37767.9	25.26	Considerata	0.99	Si

Verifica a torsione §4.2.4.1.2.5 NTC18

X	Comb.	Sfruttamento torsione	TEd	TRd	Riduzione taglio resistente	Sfruttamento taglio-torsione	τEd,totale	τRd	Verifica
41.8	SLV 5	0.249	9570.7	38489.3	Considerata				Si

Verifica a torsione SLD §4.2.4.1.2.5 NTC18

X	Comb.	Sfruttamento torsione	TEd	TRd	Riduzione taglio resistente	Sfruttamento taglio-torsione	τEd,totale	τRd	Verifica
41.8	SLD 5	0.094	3628.7	38489.3	Considerata				Si

Verifica a presso/tenso flessione retta X §§ 4.2.4.1.2.3 - 4.2.4.1.2.6 - 4.2.4.1.2.7 - 4.2.4.1.2.8 NTC18

Verifiche eseguite utilizzando la formula conservativa (6.2) §6.2.1 EN 1993-1-1:2005.

X	Comb.	Sfruttamento	Classe	NEd	NRd	Rid. NRd da VEd	Mx,Ed	Mx,Rd	Rid. Mx,Rd da VEd	Rid. Mx,Rd da NEd	ρx	ρy	Verifica
0	SLU 105	0.709	1	-78856.6	201468.8	1	619502	1952423	1		0	0	Si

Verifica a presso/tenso flessione retta Y §§ 4.2.4.1.2.3 - 4.2.4.1.2.6 - 4.2.4.1.2.7 - 4.2.4.1.2.8 NTC18

Verifiche eseguite utilizzando la formula conservativa (6.2) §6.2.1 EN 1993-1-1:2005.

X	Comb.	Sfruttamento	Classe	NEd	NRd	Rid. NRd da VEd	My,Ed	My,Rd	Rid. My,Rd da VEd	Rid. My,Rd da NEd	ρx	ρy	Verifica
34	SLV 9	0.064	1	-8786.6	201468.8	1	-19238	921364	1		0	0	Si

Verifica a presso/tenso flessione retta Y SLD §§ 4.2.4.1.2.3 - 4.2.4.1.2.6 - 4.2.4.1.2.7 - 4.2.4.1.2.8 NTC18

Verifiche eseguite utilizzando la formula conservativa (6.2) §6.2.1 EN 1993-1-1:2005.

X	Comb.	Sfruttamento	Classe	NEd	NRd	Rid. NRd da VEd	My,Ed	My,Rd	Rid. My,Rd da VEd	Rid. My,Rd da NEd	ρx	ρy	Verifica
36.6	SLD 9	0.051	1	-8576	201468.8	1	-7637	921364	1		0	0	Si

Verifica a presso/tenso flessione deviata §§ 4.2.4.1.2.3 - 4.2.4.1.2.6 - 4.2.4.1.2.7 - 4.2.4.1.2.8 NTC18

Verifiche eseguite utilizzando la formula conservativa (6.2) §6.2.1 EN 1993-1-1:2005.

X	Comb.	Sfruttamento	Classe	NEd	NRd	Rid. NRd da VEd	Mx,Ed	Mx,Rd	My,Ed	My,Rd	Rid. Mx,Rd da VEd	Rid. Mx,Rd da NEd	Rid. My,Rd da VEd	Rid. My,Rd da NEd	α	β	ρx	ρy	Verifica
78.5	SLV 10	0.085	1	-8283.2	201468.8	1	-12468	1952423	-34564	921364	1		1				0	0	Si

Verifica a presso/tenso flessione deviata SLD §§ 4.2.4.1.2.3 - 4.2.4.1.2.6 - 4.2.4.1.2.7 - 4.2.4.1.2.8 NTC18

Verifiche eseguite utilizzando la formula conservativa (6.2) §6.2.1 EN 1993-1-1:2005.

X	Comb.	Sfruttamento	Classe	NEd	NRd	Rid. NRd da VEd	Mx,Ed	Mx,Rd	My,Ed	My,Rd	Rid. Mx,Rd da VEd	Rid. Mx,Rd da NEd	Rid. My,Rd da VEd	Rid. My,Rd da NEd	α	β	ρx	ρy	Verifica
0	SLD 6	0.074	1	-8677.1	201468.8	1	54359	1952423	-2853	921364	1		1				0	0	Si

Verifiche ad instabilità

Caratteristiche iniziali

Membratura principale per controllo snellezza; Calcolo di snellezze ed N critici condotti secondo gli assi principali;
Curva X: b; Curva Y: c; Svergolamento: Carico all'estradosso; Curva svergolamento: b;

Dati per instabilità attorno a x

Numero rit.	Presente	Ascissa	Campata	βx/m	Vincolo a entrambi estremi	λx/m	λVer
1	Si	0					
			1-2	1	Si	7.8	Si, (<200)
2	Si	78.5					

Dati per instabilità attorno a y

Numero rit.	Presente	Ascissa	Campata	βy/n	k,LT	kw,LT	Vincolo a entrambi estremi	λy/n	λVer
1	Si	0							
			1-2	1	1	1	Si	13.1	Si, (<200)
2	Si	78.5							

Verifica di stabilità per pressoflessione §C.4.2.4.1.3.3.2 NTC18

X	Comb.	Sfruttamento	Classe	NEd	NRk	Mx,Ed max	Mx,Rk	My,Ed max	My,Rk	χ,x	χ,y	kxx	kxy	kyx	kyy	χ,LT	Verifica
0	SLU 84	0.63	1	-78856.6	211542.2	619501.3	2050044	12.8	967432.2	1	1	0.383	0.299	0.751	0.499	1	Si

Verifica di stabilità per pressoflessione SLD §C.4.2.4.1.3.3.2 NTC18

X	Comb.	Sfruttamento	Classe	NEd	NRk	Mx,Ed max	Mx,Rk	My,Ed max	My,Rk	χ,x	χ,y	kxx	kxy	kyx	kyy	χ,LT	Verifica
0	SLD 5	0.074	1	-8677.1	211542.2	54358.7	2050044	13105.2	967432.2	1	1	0.398	0.407	0.751	0.678	1	Si

Verifica di stabilità a taglio anima Y §4.2.4.1.2.4 [4.2.27] NTC18

η	hw	tw	hw/tw max	Verifica
1.2	20.6	0.8	55.46	Si

Verifica di stabilità a taglio anima Y SLD §4.2.4.1.2.4 [4.2.27] NTC18

η	hw	tw	hw/tw max	Verifica
1.2	20.6	0.8	55.46	Si

Verifiche a deformabilità

Mensola X: No; Mensola Y: No.

Frecce lungo X

Ascissa freccia	Combinazione	Freccia	Luce	L/f	L/f,min	Tipo	Verifica
34	SLE RA 1	0	78.5	10000	250	Totale	Si
31.4	SLE RA 31	0	78.5	10000	250	Totale	Si
31.4	SLE RA 30	0	78.5	10000	250	Totale	Si
31.4	SLE RA 29	0	78.5	10000	250	Totale	Si
31.4	SLE RA 28	0	78.5	10000	250	Totale	Si
31.4	SLE RA 2	0	78.5	10000	350	Variabile	Si
28.8	SLE RA 31	0	78.5	10000	350	Variabile	Si
28.8	SLE RA 30	0	78.5	10000	350	Variabile	Si
28.8	SLE RA 29	0	78.5	10000	350	Variabile	Si
28.8	SLE RA 28	0	78.5	10000	350	Variabile	Si

Frecce lungo Y

Ascissa freccia	Combinazione	Freccia	Luce	L/f	L/f,min	Tipo	Verifica
44.5	SLE RA 1	-0.002	78.5	10000	250	Totale	Si
57.5	SLE RA 31	-0.003	78.5	10000	250	Totale	Si
44.5	SLE RA 30	-0.002	78.5	10000	250	Totale	Si
57.5	SLE RA 29	-0.003	78.5	10000	250	Totale	Si
44.5	SLE RA 28	-0.002	78.5	10000	250	Totale	Si
60.2	SLE RA 2	-0.002	78.5	10000	350	Variabile	Si
60.2	SLE RA 31	-0.002	78.5	10000	350	Variabile	Si
57.5	SLE RA 30	0	78.5	10000	350	Variabile	Si
60.2	SLE RA 29	-0.002	78.5	10000	350	Variabile	Si
20.9	SLE RA 28	0	78.5	10000	350	Variabile	Si

Superelemento in acciaio composto dall'asta 96

Caratteristiche del materiale

Acciaio: S275, fyk = 2750

Caratteristiche geometriche

Lunghezza: 78.5
Nodo iniziale: 82 Nodo finale: 104
Cerniera iniziale: No Cerniera finale: No
Sovraresistenza: 0% Sisma Z: No

Caratteristiche della sezione

Sezione	Rotazione	Area	Jx	Jy	ix	iy	Wx	Wy	Wplx	Wply
HEA240	0	76.92	7771.3	2768.96	10.05	6	675.77	230.75	745.47	351.79

Verifiche di resistenza

Verifiche a forza assiale §4.2.4.1.2.1 - §4.2.4.1.2.2 NTC18

X	Comb.	Sfruttamento	Classe	NEd	Nc,Rd	Nt,Rd	Riduzione da taglio	ρx	ρy	Verifica
0	SLU 118	0.391	1	-78856.6	201468.8		1	0	0	Si

Verifiche a forza assiale SLD §4.2.4.1.2.1 - §4.2.4.1.2.2 NTC18

X	Comb.	Sfruttamento	Classe	NEd	Nc,Rd	Nt,Rd	Riduzione da taglio	ρx	ρy	Verifica
0	SLD 1	0.046	1	-9356.4	201468.8		1	0	0	Si

Verifica a taglio X §4.2.4.1.2.4 NTC18

X	Comb.	Sfruttamento	VEd	Vc,Rd	Av	Interazione taglio-torsione	Riduzione torsione	Verifica
78.5	SLV 8	0.004	-344.8	83198.2	61.47	Considerata	0.9	Si

Verifica a taglio X SLD §4.2.4.1.2.4 NTC18

X	Comb.	Sfruttamento	VEd	Vc,Rd	Av	Interazione taglio-torsione	Riduzione torsione	Verifica
78.5	SLD 8	0.001	-130.7	89381.9	61.47	Considerata	0.96	Si

Verifica a taglio Y §4.2.4.1.2.4 NTC18

X	Comb.	Sfruttamento	VEd	Vc,Rd	Av	Interazione taglio-torsione	Riduzione torsione	Verifica
0	SLU 72	0.439	16773.3	38202.6	25.26	Considerata	1	Si

Verifica a taglio Y SLD §4.2.4.1.2.4 NTC18

X	Comb.	Sfruttamento	VEd	Vc,Rd	Av	Interazione taglio-torsione	Riduzione torsione	Verifica
0	SLD 13	0.053	1996.2	37767.9	25.26	Considerata	0.99	Si

Verifica a torsione §4.2.4.1.2.5 NTC18

X	Comb.	Sfruttamento torsione	TEd	TRd	Riduzione taglio resistente	Sfruttamento taglio-torsione	τEd,totale	τRd	Verifica
78.5	SLV 10	0.249	-9570.7	38489.3	Considerata				Si

Verifica a torsione SLD §4.2.4.1.2.5 NTC18

X	Comb.	Sfruttamento torsione	TEd	TRd	Riduzione taglio resistente	Sfruttamento taglio-torsione	τEd,totale	τRd	Verifica
78.5	SLD 10	0.094	-3628.7	38489.3	Considerata				Si

Verifica a presso/tenso flessione retta X §§ 4.2.4.1.2.3 - 4.2.4.1.2.6 - 4.2.4.1.2.7 - 4.2.4.1.2.8 NTC18

Verifiche eseguite utilizzando la formula conservativa (6.2) §6.2.1 EN 1993-1-1:2005.

X	Comb.	Sfruttamento	Classe	NEd	NRd	Rid. NRd da VEd	Mx,Ed	Mx,Rd	Rid. Mx,Rd da VEd	Rid. Mx,Rd da NEd	ρx	ρy	Verifica
0	SLU 105	0.709	1	-78856.6	201468.8	1	619502	1952423	1		0	0	Si

Verifica a presso/tenso flessione retta Y §§ 4.2.4.1.2.3 - 4.2.4.1.2.6 - 4.2.4.1.2.7 - 4.2.4.1.2.8 NTC18

Verifiche eseguite utilizzando la formula conservativa (6.2) §6.2.1 EN 1993-1-1:2005.

X	Comb.	Sfruttamento	Classe	NEd	NRd	Rid. NRd da VEd	My,Ed	My,Rd	Rid. My,Rd da VEd	Rid. My,Rd da NEd	ρx	ρy	Verifica
34	SLV 5	0.064	1	-8786.6	201468.8	1	19238	921364	1		0	0	Si

Verifica a presso/tenso flessione retta Y SLD §§ 4.2.4.1.2.3 - 4.2.4.1.2.6 - 4.2.4.1.2.7 - 4.2.4.1.2.8 NTC18

Verifiche eseguite utilizzando la formula conservativa (6.2) §6.2.1 EN 1993-1-1:2005.

X	Comb.	Sfruttamento	Classe	NEd	NRd	Rid. NRd da VEd	My,Ed	My,Rd	Rid. My,Rd da VEd	Rid. My,Rd da NEd	ρx	ρy	Verifica
36.6	SLD 5	0.051	1	-8576	201468.8	1	7637	921364	1		0	0	Si

Verifica a presso/tenso flessione deviata §§ 4.2.4.1.2.3 - 4.2.4.1.2.6 - 4.2.4.1.2.7 - 4.2.4.1.2.8 NTC18

Verifiche eseguite utilizzando la formula conservativa (6.2) §6.2.1 EN 1993-1-1:2005.

X	Comb.	Sfruttamento	Classe	NEd	NRd	Rid. NRd da VEd	Mx,Ed	Mx,Rd	My,Ed	My,Rd	Rid. Mx,Rd da VEd	Rid. Mx,Rd da NEd	Rid. My,Rd da VEd	Rid. My,Rd da NEd	α	β	ρx	ρy	Verifica
78.5	SLV 6	0.085	1	-8283.2	201468.8	1	-12468	1952423	34564	921364	1		1				0	0	Si

Verifica a presso/tenso flessione deviata SLD §§ 4.2.4.1.2.3 - 4.2.4.1.2.6 - 4.2.4.1.2.7 - 4.2.4.1.2.8 NTC18

Verifiche eseguite utilizzando la formula conservativa (6.2) §6.2.1 EN 1993-1-1:2005.

X	Comb.	Sfruttamento	Classe	NEd	NRd	Rid. NRd da VEd	Mx,Ed	Mx,Rd	My,Ed	My,Rd	Rid. Mx,Rd da VEd	Rid. Mx,Rd da NEd	Rid. My,Rd da VEd	Rid. My,Rd da NEd	α	β	ρx	ρy	Verifica
0	SLD 9	0.074	1	-8677.1	201468.8	1	54359	1952423	2853	921364	1		1				0	0	Si

Verifiche ad instabilità

Caratteristiche iniziali

Membratura principale per controllo snellezza; Calcolo di snellezze ed N critici condotti secondo gli assi principali;
Curva X: b; Curva Y: c; Svergolamento: Carico all'estradosso; Curva svergolamento: b;

Dati per instabilità attorno a x

Numero rit.	Presente	Ascissa	Campata	βx/m	Vincolo a entrambi estremi	λx/m	λVer
1	Si	0					
			1-2	1	Si	7.8	Si, (<200)
2	Si	78.5					

Dati per instabilità attorno a y

Numero rit.	Presente	Ascissa	Campata	βy/n	k,LT	kw,LT	Vincolo a entrambi estremi	λy/n	λVer
1	Si	0							
			1-2	1	1	1	Si	13.1	Si, (<200)
2	Si	78.5							

Verifica di stabilità per pressoflessione §C.4.2.4.1.3.3.2 NTC18

X	Comb.	Sfruttamento	Classe	NEd	NRk	Mx,Ed max	Mx,Rk	My,Ed max	My,Rk	χ,x	χ,y	kxx	kxy	kyx	kyy	χ,LT	Verifica
0	SLU 84	0.63	1	-78856.6	211542.2	619501	2050044	12.8	967432.2	1	1	0.383	0.299	0.751	0.498	1	Si

Verifica di stabilità per pressoflessione SLD §C.4.2.4.1.3.3.2 NTC18

X	Comb.	Sfruttamento	Classe	NEd	NRk	Mx,Ed max	Mx,Rk	My,Ed max	My,Rk	χ,x	χ,y	kxx	kxy	kyx	kyy	χ,LT	Verifica
0	SLD 9	0.074	1	-8677.1	211542.2	54358.7	2050044	13105.2	967432.2	1	1	0.398	0.407	0.751	0.678	1	Si

Verifica di stabilità a taglio anima Y §4.2.4.1.2.4 [4.2.27] NTC18

η	hw	tw	hw/tw max	Verifica
1.2	20.6	0.8	55.46	Si

Verifica di stabilità a taglio anima Y SLD §4.2.4.1.2.4 [4.2.27] NTC18

η	hw	tw	hw/tw max	Verifica
1.2	20.6	0.8	55.46	Si

Verifiche a deformabilità

Mensola X: No; Mensola Y: No.

Frecce lungo X

Ascissa freccia	Combinazione	Freccia	Luce	L/f	L/f,min	Tipo	Verifica
34	SLE RA 1	0	78.5	10000	250	Totale	Si
31.4	SLE RA 31	0	78.5	10000	250	Totale	Si
31.4	SLE RA 30	0	78.5	10000	250	Totale	Si
31.4	SLE RA 29	0	78.5	10000	250	Totale	Si
31.4	SLE RA 28	0	78.5	10000	250	Totale	Si
31.4	SLE RA 2	0	78.5	10000	350	Variabile	Si
28.8	SLE RA 31	0	78.5	10000	350	Variabile	Si
28.8	SLE RA 30	0	78.5	10000	350	Variabile	Si
28.8	SLE RA 29	0	78.5	10000	350	Variabile	Si
28.8	SLE RA 28	0	78.5	10000	350	Variabile	Si

Frecce lungo Y

Ascissa freccia	Combinazione	Freccia	Luce	L/f	L/f,min	Tipo	Verifica
44.5	SLE RA 1	-0.002	78.5	10000	250	Totale	Si
57.5	SLE RA 31	-0.003	78.5	10000	250	Totale	Si
44.5	SLE RA 30	-0.002	78.5	10000	250	Totale	Si
57.5	SLE RA 29	-0.003	78.5	10000	250	Totale	Si
44.5	SLE RA 28	-0.002	78.5	10000	250	Totale	Si
60.2	SLE RA 2	-0.002	78.5	10000	350	Variabile	Si
60.2	SLE RA 31	-0.002	78.5	10000	350	Variabile	Si
57.5	SLE RA 30	0	78.5	10000	350	Variabile	Si
60.2	SLE RA 29	-0.002	78.5	10000	350	Variabile	Si
23.5	SLE RA 28	0	78.5	10000	350	Variabile	Si

Superelemento in acciaio composto dall'asta 97

Caratteristiche del materiale

Acciaio: S275, fyk = 2750

Caratteristiche geometriche

Lunghezza: 170.7
Nodo iniziale: 104 Nodo finale: 119
Cerniera iniziale: No Cerniera finale: No
Sovraresistenza: 0% Sisma Z: No

Caratteristiche della sezione

Sezione	Rotazione	Area	Jx	Jy	ix	iy	Wx	Wy	Wplx	Wply
HEA240	0	76.92	7771.3	2768.96	10.05	6	675.77	230.75	745.47	351.79

Verifiche di resistenza

Verifiche a forza assiale §4.2.4.1.2.1 - §4.2.4.1.2.2 NTC18

X	Comb.	Sfruttamento	Classe	NEd	Nc,Rd	Nt,Rd	Riduzione da taglio	ρx	ρy	Verifica
0	SLU 118	0.331	1	-66778.4	201468.8		1	0	0	Si

Verifiche a forza assiale SLD §4.2.4.1.2.1 - §4.2.4.1.2.2 NTC18

X	Comb.	Sfruttamento	Classe	NEd	Nc,Rd	Nt,Rd	Riduzione da taglio	ρx	ρy	Verifica
0	SLD 1	0.042	1	-8530.5	201468.8		1	0	0	Si

Verifica a taglio X §4.2.4.1.2.4 NTC18

X	Comb.	Sfruttamento	VEd	Vc,Rd	Av	Interazione taglio-torsione	Riduzione torsione	Verifica
147.9	SLV 11	0.003	-297.1	92791.3	61.47	Considerata	1	Si

Verifica a taglio X SLD §4.2.4.1.2.4 NTC18

X	Comb.	Sfruttamento	VEd	Vc,Rd	Av	Interazione taglio-torsione	Riduzione torsione	Verifica
170.7	SLD 12	0.001	-112.7	92893.7	61.47	Considerata	1	Si

Verifica a taglio Y §4.2.4.1.2.4 NTC18

X	Comb.	Sfruttamento	VEd	Vc,Rd	Av	Interazione taglio-torsione	Riduzione torsione	Verifica
170.7	SLU 85	0.197	-7528	38202.6	25.26	Considerata	1	Si

Verifica a taglio Y SLD §4.2.4.1.2.4 NTC18

X	Comb.	Sfruttamento	VEd	Vc,Rd	Av	Interazione taglio-torsione	Riduzione torsione	Verifica
170.7	SLD 2	0.081	-3112.3	38202.6	25.26	Considerata	1	Si

Verifica a torsione §4.2.4.1.2.5 NTC18

X	Comb.	Sfruttamento torsione	TEd	TRd	Riduzione taglio resistente	Sfruttamento taglio-torsione	τEd,totale	τRd	Verifica
170.7	SLV 10	0.004	170.7	38489.3	Considerata				Si

Verifica a torsione SLD §4.2.4.1.2.5 NTC18

X	Comb.	Sfruttamento torsione	TEd	TRd	Riduzione taglio resistente	Sfruttamento taglio-torsione	τEd,totale	τRd	Verifica
0	SLD 9	0.002	64.8	38489.3	Considerata				Si

Verifica a presso/tenso flessione retta X §§ 4.2.4.1.2.3 - 4.2.4.1.2.6 - 4.2.4.1.2.7 - 4.2.4.1.2.8 NTC18

Verifiche eseguite utilizzando la formula conservativa (6.2) §6.2.1 EN 1993-1-1:2005.

X	Comb.	Sfruttamento	Classe	NEd	NRd	Rid. NRd da VEd	Mx,Ed	Mx,Rd	Rid. Mx,Rd da VEd	Rid. Mx,Rd da NEd	ρx	ρy	Verifica
0	SLU 85	0.632	1	-66778.4	201468.8	1	-586893	1952423	1		0	0	Si

Verifica a presso/tenso flessione retta Y §§ 4.2.4.1.2.3 - 4.2.4.1.2.6 - 4.2.4.1.2.7 - 4.2.4.1.2.8 NTC18

Verifiche eseguite utilizzando la formula conservativa (6.2) §6.2.1 EN 1993-1-1:2005.

X	Comb.	Sfruttamento	Classe	NEd	NRd	Rid. NRd da VEd	My,Ed	My,Rd	Rid. My,Rd da VEd	Rid. My,Rd da NEd	ρx	ρy	Verifica
130.9	SLV 15	0.052	1	-5483	201468.8	1	-22425	921364	1		0	0	Si

Verifica a presso/tenso flessione deviata §§ 4.2.4.1.2.3 - 4.2.4.1.2.6 - 4.2.4.1.2.7 - 4.2.4.1.2.8 NTC18

Verifiche eseguite utilizzando la formula conservativa (6.2) §6.2.1 EN 1993-1-1:2005.

X	Comb.	Sfruttamento	Classe	NEd	NRd	Rid. NRd da VEd	Mx,Ed	Mx,Rd	My,Ed	My,Rd	Rid. Mx,Rd da VEd	Rid. Mx,Rd da NEd	Rid. My,Rd da VEd	Rid. My,Rd da NEd	α	β	ρx	ρy	Verifica
170.7	SLV 7	0.182	1	-7658.7	201468.8	1	98236	1952423	-86568	921364	1		1				0	0	Si

Verifica a presso/tenso flessione deviata SLD §§ 4.2.4.1.2.3 - 4.2.4.1.2.6 - 4.2.4.1.2.7 - 4.2.4.1.2.8 NTC18

Verifiche eseguite utilizzando la formula conservativa (6.2) §6.2.1 EN 1993-1-1:2005.

X	Comb.	Sfruttamento	Classe	NEd	NRd	Rid. NRd da VEd	Mx,Ed	Mx,Rd	My,Ed	My,Rd	Rid. Mx,Rd da VEd	Rid. Mx,Rd da NEd	Rid. My,Rd da VEd	Rid. My,Rd da NEd	α	β	ρx	ρy	Verifica
170.7	SLD 8	0.123	1	-7372.9	201468.8	1	98568	1952423	-32827	921364	1		1				0	0	Si

Verifiche ad instabilità

Caratteristiche iniziali

Membratura principale per controllo snellezza; Calcolo di snellezze ed N critici condotti secondo gli assi principali;
Curva X: b; Curva Y: c; Svergolamento: Carico all'estradosso; Curva svergolamento: b;

Dati per instabilità attorno a x

Numero rit.	Presente	Ascissa	Campata	βx/m	Vincolo a entrambi estremi	λx/m	λVer
1	Si	0					
			1-2	1	Si	17	Si, (<200)
2	Si	170.7					

Dati per instabilità attorno a y

Numero rit.	Presente	Ascissa	Campata	βy/n	k,LT	kw,LT	Vincolo a entrambi estremi	λy/n	λVer
1	Si	0							
			1-2	1	1	1	Si	28.4	Si, (<200)
2	Si	170.7							

Verifica di stabilità per pressoflessione §C.4.2.4.1.3.3.2 NTC18

X	Comb.	Sfruttamento	Classe	NEd	NRk	Mx,Ed max	Mx,Rk	My,Ed max	My,Rk	χ,x	χ,y	kxx	kxy	kyx	kyy	χ,LT	Verifica
0	SLU 118	0.633	1	-66778.4	211542.2	586892.6	2050044	12.2	967432.2	1	0.935	0.681	0.388	0.928	0.646	1	Si

Verifica di stabilità per pressoflessione SLD §C.4.2.4.1.3.3.2 NTC18

X	Comb.	Sfruttamento	Classe	NEd	NRk	Mx,Ed max	Mx,Rk	My,Ed max	My,Rk	χ,x	χ,y	kxx	kxy	kyx	kyy	χ,LT	Verifica
0	SLD 7	0.116	1	-7953	211542.2	98568.2	2050044	32827	967432.2	1	0.935	0.614	0.46	0.928	0.767	1	Si

Verifica di stabilità a taglio anima Y §4.2.4.1.2.4 [4.2.27] NTC18

η	hw	tw	hw/tw max	Verifica
1.2	20.6	0.8	55.46	Si

Verifica di stabilità a taglio anima Y SLD §4.2.4.1.2.4 [4.2.27] NTC18

η	hw	tw	hw/tw max	Verifica
1.2	20.6	0.8	55.46	Si

Verifiche a deformabilità

Mensola X: No; Mensola Y: No.

Frecce lungo X

Ascissa freccia	Combinazione	Freccia	Luce	L/f	L/f,min	Tipo	Verifica
102.4	SLE RA 1	0	170.7	10000	250	Totale	Si
91	SLE RA 31	0	170.7	10000	250	Totale	Si
91	SLE RA 30	0	170.7	10000	250	Totale	Si
91	SLE RA 29	0	170.7	10000	250	Totale	Si
96.7	SLE RA 28	0	170.7	10000	250	Totale	Si
102.4	SLE RA 2	0	170.7	10000	350	Variabile	Si
85.3	SLE RA 31	0	170.7	10000	350	Variabile	Si
85.3	SLE RA 30	0	170.7	10000	350	Variabile	Si
85.3	SLE RA 29	0	170.7	10000	350	Variabile	Si
85.3	SLE RA 28	0	170.7	10000	350	Variabile	Si

Frecce lungo Y

Ascissa freccia	Combinazione	Freccia	Luce	L/f	L/f,min	Tipo	Verifica
74	SLE RA 19	-0.06	170.7	2854.6	250	Totale	Si
74	SLE RA 18	-0.06	170.7	2854.6	250	Totale	Si
74	SLE RA 7	-0.06	170.7	2854.6	250	Totale	Si
74	SLE RA 6	-0.06	170.7	2854.6	250	Totale	Si
74	SLE RA 15	-0.059	170.7	2872.7	250	Totale	Si
74	SLE RA 19	-0.042	170.7	4074.6	350	Variabile	Si
74	SLE RA 18	-0.042	170.7	4074.6	350	Variabile	Si
74	SLE RA 7	-0.042	170.7	4074.6	350	Variabile	Si
74	SLE RA 6	-0.042	170.7	4074.6	350	Variabile	Si
74	SLE RA 15	-0.042	170.7	4111.6	350	Variabile	Si

Superelemento in acciaio composto dall'asta 98

Caratteristiche del materiale

Acciaio: S275, fyk = 2750

Caratteristiche geometriche

Lunghezza: 170.7
Nodo iniziale: 103 Nodo finale: 119
Cerniera iniziale: No Cerniera finale: No
Sovraresistenza: 0% Sisma Z: No

Caratteristiche della sezione

Sezione	Rotazione	Area	Jx	Jy	ix	iy	Wx	Wy	Wplx	Wply
HEA240	0	76.92	7771.3	2768.96	10.05	6	675.77	230.75	745.47	351.79

Verifiche di resistenza

Verifiche a forza assiale §4.2.4.1.2.1 - §4.2.4.1.2.2 NTC18

X	Comb.	Sfruttamento	Classe	NEd	Nc,Rd	Nt,Rd	Riduzione da taglio	ρx	ρy	Verifica
0	SLU 85	0.331	1	-66778.4	201468.8		1	0	0	Si

Verifiche a forza assiale SLD §4.2.4.1.2.1 - §4.2.4.1.2.2 NTC18

X	Comb.	Sfruttamento	Classe	NEd	Nc,Rd	Nt,Rd	Riduzione da taglio	ρx	ρy	Verifica
0	SLD 14	0.042	1	-8530.5	201468.8		1	0	0	Si

Verifica a taglio X §4.2.4.1.2.4 NTC18

X	Comb.	Sfruttamento	VEd	Vc,Rd	Av	Interazione taglio-torsione	Riduzione torsione	Verifica
170.7	SLV 8	0.003	297.1	92791.3	61.47	Considerata	1	Si

Verifica a taglio X SLD §4.2.4.1.2.4 NTC18

X	Comb.	Sfruttamento	VEd	Vc,Rd	Av	Interazione taglio-torsione	Riduzione torsione	Verifica
170.7	SLD 8	0.001	112.7	92893.7	61.47	Considerata	1	Si

Verifica a taglio Y §4.2.4.1.2.4 NTC18

X	Comb.	Sfruttamento	VEd	Vc,Rd	Av	Interazione taglio-torsione	Riduzione torsione	Verifica
170.7	SLU 118	0.197	-7528	38202.6	25.26	Considerata	1	Si

Verifica a taglio Y SLD §4.2.4.1.2.4 NTC18

X	Comb.	Sfruttamento	VEd	Vc,Rd	Av	Interazione taglio-torsione	Riduzione torsione	Verifica
170.7	SLD 14	0.081	-3112.3	38202.6	25.26	Considerata	1	Si

Verifica a torsione §4.2.4.1.2.5 NTC18

X	Comb.	Sfruttamento torsione	TEd	TRd	Riduzione taglio resistente	Sfruttamento taglio-torsione	τEd,totale	τRd	Verifica
91	SLV 5	0.004	-170.7	38489.3	Considerata				Si

Verifica a torsione SLD §4.2.4.1.2.5 NTC18

X	Comb.	Sfruttamento torsione	TEd	TRd	Riduzione taglio resistente	Sfruttamento taglio-torsione	τEd,totale	τRd	Verifica
0	SLD 5	0.002	-64.8	38489.3	Considerata				Si

Verifica a presso/tenso flessione retta X §§ 4.2.4.1.2.3 - 4.2.4.1.2.6 - 4.2.4.1.2.7 - 4.2.4.1.2.8 NTC18

Verifiche eseguite utilizzando la formula conservativa (6.2) §6.2.1 EN 1993-1-1:2005.

X	Comb.	Sfruttamento	Classe	NEd	NRd	Rid. NRd da VEd	Mx,Ed	Mx,Rd	Rid. Mx,Rd da VEd	Rid. Mx,Rd da NEd	ρx	ρy	Verifica
0	SLU 85	0.632	1	-66778.4	201468.8	1	-586892	1952423	1		0	0	Si

Verifica a presso/tenso flessione retta Y §§ 4.2.4.1.2.3 - 4.2.4.1.2.6 - 4.2.4.1.2.7 - 4.2.4.1.2.8 NTC18

Verifiche eseguite utilizzando la formula conservativa (6.2) §6.2.1 EN 1993-1-1:2005.

X	Comb.	Sfruttamento	Classe	NEd	NRd	Rid. NRd da VEd	My,Ed	My,Rd	Rid. My,Rd da VEd	Rid. My,Rd da NEd	ρx	ρy	Verifica
130.9	SLV 3	0.052	1	-5483	201468.8	1	22425	921364	1		0	0	Si

Verifica a presso/tenso flessione deviata §§ 4.2.4.1.2.3 - 4.2.4.1.2.6 - 4.2.4.1.2.7 - 4.2.4.1.2.8 NTC18

Verifiche eseguite utilizzando la formula conservativa (6.2) §6.2.1 EN 1993-1-1:2005.

X	Comb.	Sfruttamento	Classe	NEd	NRd	Rid. NRd da VEd	Mx,Ed	Mx,Rd	My,Ed	My,Rd	Rid. Mx,Rd da VEd	Rid. Mx,Rd da NEd	Rid. My,Rd da VEd	Rid. My,Rd da NEd	α	β	ρx	ρy	Verifica
170.7	SLV 11	0.182	1	-7658.7	201468.8	1	98236	1952423	86568	921364	1		1				0	0	Si

Verifica a presso/tenso flessione deviata SLD §§ 4.2.4.1.2.3 - 4.2.4.1.2.6 - 4.2.4.1.2.7 - 4.2.4.1.2.8 NTC18

Verifiche eseguite utilizzando la formula conservativa (6.2) §6.2.1 EN 1993-1-1:2005.

X	Comb.	Sfruttamento	Classe	NEd	NRd	Rid. NRd da VEd	Mx,Ed	Mx,Rd	My,Ed	My,Rd	Rid. Mx,Rd da VEd	Rid. Mx,Rd da NEd	Rid. My,Rd da VEd	Rid. My,Rd da NEd	α	β	ρx	ρy	Verifica
170.7	SLD 12	0.123	1	-7372.9	201468.8	1	98568	1952423	32827	921364	1		1				0	0	Si

Verifiche ad instabilità

Caratteristiche iniziali

Membratura principale per controllo snellezza; Calcolo di snellezze ed N critici condotti secondo gli assi principali;
Curva X: b; Curva Y: c; Svergolamento: Carico all'estradosso; Curva svergolamento: b;

Dati per instabilità attorno a x

Numero rit.	Presente	Ascissa	Campata	βx/m	Vincolo a entrambi estremi	λx/m	λVer
1	Si	0					
			1-2	1	Si	17	Si, (<200)
2	Si	170.7					

Dati per instabilità attorno a y

Numero rit.	Presente	Ascissa	Campata	βy/n	k,LT	kw,LT	Vincolo a entrambi estremi	λy/n	λVer
1	Si	0							
			1-2	1	1	1	Si	28.4	Si, (<200)
2	Si	170.7							

Verifica di stabilità per pressoflessione §C.4.2.4.1.3.3.2 NTC18

X	Comb.	Sfruttamento	Classe	NEd	NRk	Mx,Ed max	Mx,Rk	My,Ed max	My,Rk	χ,x	χ,y	kxx	kxy	kyx	kyy	χ,LT	Verifica
0	SLU 85	0.633	1	-66778.4	211542.2	586891.9	2050044	12.2	967432.2	1	0.935	0.681	0.388	0.928	0.646	1	Si

Verifica di stabilità per pressoflessione SLD §C.4.2.4.1.3.3.2 NTC18

X	Comb.	Sfruttamento	Classe	NEd	NRk	Mx,Ed max	Mx,Rk	My,Ed max	My,Rk	χ,x	χ,y	kxx	kxy	kyx	kyy	χ,LT	Verifica
0	SLD 11	0.116	1	-7953	211542.2	98568.2	2050044	32827	967432.2	1	0.935	0.614	0.46	0.928	0.767	1	Si

Verifica di stabilità a taglio anima Y §4.2.4.1.2.4 [4.2.27] NTC18

η	hw	tw	hw/tw max	Verifica
1.2	20.6	0.8	55.46	Si

Verifica di stabilità a taglio anima Y SLD §4.2.4.1.2.4 [4.2.27] NTC18

η	hw	tw	hw/tw max	Verifica
1.2	20.6	0.8	55.46	Si

Verifiche a deformabilità

Mensola X: No; Mensola Y: No.

Frecce lungo X

Ascissa freccia	Combinazione	Freccia	Luce	L/f	L/f,min	Tipo	Verifica
102.4	SLE RA 1	0	170.7	10000	250	Totale	Si
91	SLE RA 31	0	170.7	10000	250	Totale	Si
91	SLE RA 30	0	170.7	10000	250	Totale	Si
91	SLE RA 29	0	170.7	10000	250	Totale	Si
96.7	SLE RA 28	0	170.7	10000	250	Totale	Si
102.4	SLE RA 2	0	170.7	10000	350	Variabile	Si
85.3	SLE RA 31	0	170.7	10000	350	Variabile	Si
85.3	SLE RA 30	0	170.7	10000	350	Variabile	Si
85.3	SLE RA 29	0	170.7	10000	350	Variabile	Si

Ascissa freccia	Combinazione	Freccia	Luce	L/f	L/f,min	Tipo	Verifica
85.3	SLE RA 28	0	170.7	10000	350	Variabile	Si

Frecce lungo Y

Ascissa freccia	Combinazione	Freccia	Luce	L/f	L/f,min	Tipo	Verifica
74	SLE RA 19	-0.06	170.7	2854.6	250	Totale	Si
74	SLE RA 7	-0.06	170.7	2854.6	250	Totale	Si
74	SLE RA 18	-0.06	170.7	2854.6	250	Totale	Si
74	SLE RA 6	-0.06	170.7	2854.6	250	Totale	Si
74	SLE RA 15	-0.059	170.7	2872.7	250	Totale	Si
74	SLE RA 19	-0.042	170.7	4074.6	350	Variabile	Si
74	SLE RA 7	-0.042	170.7	4074.6	350	Variabile	Si
74	SLE RA 18	-0.042	170.7	4074.6	350	Variabile	Si
74	SLE RA 6	-0.042	170.7	4074.6	350	Variabile	Si
74	SLE RA 15	-0.042	170.7	4111.6	350	Variabile	Si

Superelemento in acciaio composto dall'asta 99

Caratteristiche del materiale

Acciaio: S275, fyk = 2750

Caratteristiche geometriche

Lunghezza: 128
Nodo iniziale: 52 Nodo finale: 51
Cerniera iniziale: Svincolo: M2, M3 Cerniera finale: No
Sovraresistenza: 0% Sisma Z: No

Caratteristiche della sezione

Sezione	Rotazione	Area	Jx	Jy	ix	iy	Wx	Wy	Wplx	Wply
HEA160	0	38.82	1674.7	615.62	6.57	3.98	220.36	76.95	245.43	117.67

Verifiche di resistenza

Verifiche a forza assiale §4.2.4.1.2.1 - §4.2.4.1.2.2 NTC18

X	Comb.	Sfruttamento	Classe	NEd	Nc,Rd	Nt,Rd	Riduzione da taglio	ρx	ρy	Verifica
119.5	SLU 118	0.276		28074.4		101662.9	1	0	0	Si

Verifiche a forza assiale SLD §4.2.4.1.2.1 - §4.2.4.1.2.2 NTC18

X	Comb.	Sfruttamento	Classe	NEd	Nc,Rd	Nt,Rd	Riduzione da taglio	ρx	ρy	Verifica
0	SLD 14	0.02		2012.5		101662.9	1	0	0	Si

Verifica a taglio X §4.2.4.1.2.4 NTC18

X	Comb.	Sfruttamento	VEd	Vc,Rd	Av	Interazione taglio-torsione	Riduzione torsione	Verifica
128	SLV 8	0.001	48.4	43042.3	30.78	Considerata	0.92	Si

Verifica a taglio Y §4.2.4.1.2.4 NTC18

X	Comb.	Sfruttamento	VEd	Vc,Rd	Av	Interazione taglio-torsione	Riduzione torsione	Verifica
128	SLU 85	0.018	-351.7	20045.7	13.26	Considerata	1	Si

Verifica a taglio Y SLD §4.2.4.1.2.4 NTC18

X	Comb.	Sfruttamento	VEd	Vc,Rd	Av	Interazione taglio-torsione	Riduzione torsione	Verifica
128	SLD 13	0.003	-57.1	19880.1	13.26	Considerata	0.99	Si

Verifica a torsione §4.2.4.1.2.5 NTC18

X	Comb.	Sfruttamento torsione	TEd	TRd	Riduzione taglio resistente	Sfruttamento taglio-torsione	τEd,totale	τRd	Verifica
128	SLV 10	0.181	-2654.2	14685.6	Considerata				Si

Verifica a torsione SLD §4.2.4.1.2.5 NTC18

X	Comb.	Sfruttamento torsione	TEd	TRd	Riduzione taglio resistente	Sfruttamento taglio-torsione	τEd,totale	τRd	Verifica
128	SLD 10	0.069	-1006.4	14685.6	Considerata				Si

Verifica a presso/tenso flessione retta X §§ 4.2.4.1.2.3 - 4.2.4.1.2.6 - 4.2.4.1.2.7 - 4.2.4.1.2.8 NTC18

Verifiche eseguite utilizzando la formula conservativa (6.2) §6.2.1 EN 1993-1-1:2005.

X	Comb.	Sfruttamento	Classe	NEd	NRd	Rid. NRd da VEd	Mx,Ed	Mx,Rd	Rid. Mx,Rd da VEd	Rid. Mx,Rd da NEd	ρx	ρy	Verifica
128	SLU 118	0.341	1	28074.4	101662.9	1	41778	642783	1		0	0	Si

Verifica a presso/tenso flessione retta X SLD §§ 4.2.4.1.2.3 - 4.2.4.1.2.6 - 4.2.4.1.2.7 - 4.2.4.1.2.8 NTC18

Verifiche eseguite utilizzando la formula conservativa (6.2) §6.2.1 EN 1993-1-1:2005.

X	Comb.	Sfruttamento	Classe	NEd	NRd	Rid. NRd da VEd	Mx,Ed	Mx,Rd	Rid. Mx,Rd da VEd	Rid. Mx,Rd da NEd	ρx	ρy	Verifica
12.8	SLD 13	0.02	1	2012.5	101662.9	1	257	642783	1		0	0	Si

Verifica a presso/tenso flessione retta Y §§ 4.2.4.1.2.3 - 4.2.4.1.2.6 - 4.2.4.1.2.7 - 4.2.4.1.2.8 NTC18

Verifiche eseguite utilizzando la formula conservativa (6.2) §6.2.1 EN 1993-1-1:2005.

X	Comb.	Sfruttamento	Classe	NEd	NRd	Rid. NRd da VEd	My,Ed	My,Rd	Rid. My,Rd da VEd	Rid. My,Rd da NEd	ρx	ρy	Verifica
128	SLV 7	0.037	1	1700.5	101662.9	1	6192	308186	1		0	0	Si

Verifica a presso/tenso flessione retta Y SLD §§ 4.2.4.1.2.3 - 4.2.4.1.2.6 - 4.2.4.1.2.7 - 4.2.4.1.2.8 NTC18

Verifiche eseguite utilizzando la formula conservativa (6.2) §6.2.1 EN 1993-1-1:2005.

X	Comb.	Sfruttamento	Classe	NEd	NRd	Rid. NRd da VEd	My,Ed	My,Rd	Rid. My,Rd da VEd	Rid. My,Rd da NEd	ρx	ρy	Verifica
98.1	SLD 8	0.023	1	1766.1	101662.9	1	1800	308186	1		0	0	Si

Verifica a presso/tenso flessione deviata §§ 4.2.4.1.2.3 - 4.2.4.1.2.6 - 4.2.4.1.2.7 - 4.2.4.1.2.8 NTC18

Verifiche eseguite utilizzando la formula conservativa (6.2) §6.2.1 EN 1993-1-1:2005.

X	Comb.	Sfruttamento	Classe	NEd	NRd	Rid. NRd da VEd	Mx,Ed	Mx,Rd	My,Ed	My,Rd	Rid. Mx,Rd da VEd	Rid. Mx,Rd da NEd	Rid. My,Rd da VEd	Rid. My,Rd da NEd	α	β	ρx	ρy	Verifica
128	SLV 11	0.045	1	1945.5	101662.9	1	3738	642783	6192	308186	1		1				0	0	Si

Verifica a presso/tenso flessione deviata SLD §§ 4.2.4.1.2.3 - 4.2.4.1.2.6 - 4.2.4.1.2.7 - 4.2.4.1.2.8 NTC18

Verifiche eseguite utilizzando la formula conservativa (6.2) §6.2.1 EN 1993-1-1:2005.

X	Comb.	Sfruttamento	Classe	NEd	NRd	Rid. NRd da VEd	Mx,Ed	Mx,Rd	My,Ed	My,Rd	Rid. Mx,Rd da VEd	Rid. Mx,Rd da NEd	Rid. My,Rd da VEd	Rid. My,Rd da NEd	α	β	ρx	ρy	Verifica
128	SLD 11	0.03	1	1879.8	101662.9	1	2685	642783	2348	308186	1		1				0	0	Si

Verifiche ad instabilità

Caratteristiche iniziali

Membratura principale per controllo snellezza; Calcolo di snellezze ed N critici condotti secondo gli assi principali;
Curva X: b; Curva Y: c; Svergolamento: Carico all'estradosso; Curva svergolamento: b;

Dati per instabilità attorno a x

Numero rit.	Presente	Ascissa	Campata	βx/m	Vincolo a entrambi estremi	λx/m	λVer
1	Si	0					
			1-2	1	Si	19.5	Si, (<200)
2	Si	128					

Dati per instabilità attorno a y

Numero rit.	Presente	Ascissa	Campata	βy/n	k,LT	kw,LT	Vincolo a entrambi estremi	λy/n	λVer
1	Si	0							
			1-2	1	1	1	Si	32.1	Si, (<200)
2	Si	128							

Verifica di stabilità a taglio anima Y §4.2.4.1.2.4 [4.2.27] NTC18

η	hw	tw	hw/tw max	Verifica
1.2	13.4	0.6	55.46	Si

Verifica di stabilità a taglio anima Y SLD §4.2.4.1.2.4 [4.2.27] NTC18

η	hw	tw	hw/tw max	Verifica
1.2	13.4	0.6	55.46	Si

Verifiche a deformabilità

Mensola X: No; Mensola Y: No.

Frecce lungo X

Ascissa freccia	Combinazione	Freccia	Luce	L/f	L/f,min	Tipo	Verifica
72.5	SLE RA 1	0	128	10000	250	Totale	Si
72.5	SLE RA 31	0	128	10000	250	Totale	Si
72.5	SLE RA 30	0	128	10000	250	Totale	Si
72.5	SLE RA 29	0	128	10000	250	Totale	Si
72.5	SLE RA 28	0	128	10000	250	Totale	Si
72.5	SLE RA 2	0	128	10000	350	Variabile	Si
72.5	SLE RA 31	0	128	10000	350	Variabile	Si
72.5	SLE RA 30	0	128	10000	350	Variabile	Si
72.5	SLE RA 29	0	128	10000	350	Variabile	Si
72.5	SLE RA 28	0	128	10000	350	Variabile	Si

Frecce lungo Y

Ascissa freccia	Combinazione	Freccia	Luce	L/f	L/f,min	Tipo	Verifica
93.9	SLE RA 1	0	128	10000	250	Totale	Si
72.5	SLE RA 31	0.006	128	10000	250	Totale	Si
89.6	SLE RA 30	0	128	10000	250	Totale	Si
72.5	SLE RA 29	0.006	128	10000	250	Totale	Si
93.9	SLE RA 28	0	128	10000	250	Totale	Si
72.5	SLE RA 2	0.008	128	10000	350	Variabile	Si
72.5	SLE RA 31	0.006	128	10000	350	Variabile	Si
72.5	SLE RA 30	0	128	10000	350	Variabile	Si
72.5	SLE RA 29	0.006	128	10000	350	Variabile	Si
72.5	SLE RA 28	0	128	10000	350	Variabile	Si

Superelemento in acciaio composto dall'asta 100

Caratteristiche del materiale

Acciaio: S275, fyk = 2750

Caratteristiche geometriche

Lunghezza: 339
Nodo iniziale: 51 Nodo finale: 50

Cerniera iniziale: No Cerniera finale: No
Sovraresistenza: 0% Sisma Z: No

Caratteristiche della sezione

Sezione	Rotazione	Area	Jx	Jy	ix	iy	Wx	Wy	Wplx	Wply
HEA160	0	38.82	1674.7	615.62	6.57	3.98	220.36	76.95	245.43	117.67

Verifiche di resistenza

Verifiche a forza assiale §4.2.4.1.2.1 - §4.2.4.1.2.2 NTC18

X	Comb.	Sfruttamento	Classe	NEd	Nc,Rd	Nt,Rd	Riduzione da taglio	ρx	ρy	Verifica
339	SLU 85	0.356		36196.8		101662.9	1	0	0	Si

Verifiche a forza assiale SLD §4.2.4.1.2.1 - §4.2.4.1.2.2 NTC18

X	Comb.	Sfruttamento	Classe	NEd	Nc,Rd	Nt,Rd	Riduzione da taglio	ρx	ρy	Verifica
327.7	SLD 6	0.007		670.3		101662.9	1	0	0	Si

Verifica a taglio Y §4.2.4.1.2.4 NTC18

X	Comb.	Sfruttamento	VEd	Vc,Rd	Av	Interazione taglio-torsione	Riduzione torsione	Verifica
0	SLV 14	0.004	72.4	20045.7	13.26	Considerata	1	Si

Verifica a taglio Y SLD §4.2.4.1.2.4 NTC18

X	Comb.	Sfruttamento	VEd	Vc,Rd	Av	Interazione taglio-torsione	Riduzione torsione	Verifica
339	SLD 4	0.003	-61.3	20045.7	13.26	Considerata	1	Si

Verifica a presso/tenso flessione retta X §§ 4.2.4.1.2.3 - 4.2.4.1.2.6 - 4.2.4.1.2.7 - 4.2.4.1.2.8 NTC18

Verifiche eseguite utilizzando la formula conservativa (6.2) §6.2.1 EN 1993-1-1:2005.

X	Comb.	Sfruttamento	Classe	NEd	NRd	Rid. NRd da VEd	Mx,Ed	Mx,Rd	Rid. Mx,Rd da VEd	Rid. Mx,Rd da NEd	ρx	ρy	Verifica
169.5	SLU 118	0.42	1	36196.8	101662.9	1	-41020	642783	1		0	0	Si

Verifica a presso/tenso flessione retta Y §§ 4.2.4.1.2.3 - 4.2.4.1.2.6 - 4.2.4.1.2.7 - 4.2.4.1.2.8 NTC18

Verifiche eseguite utilizzando la formula conservativa (6.2) §6.2.1 EN 1993-1-1:2005.

X	Comb.	Sfruttamento	Classe	NEd	NRd	Rid. NRd da VEd	My,Ed	My,Rd	Rid. My,Rd da VEd	Rid. My,Rd da NEd	ρx	ρy	Verifica
22.6	SLV 9	0.015	1	670.3	101662.9	1	2553	308186	1		0	0	Si

Verifica a presso/tenso flessione retta Y SLD §§ 4.2.4.1.2.3 - 4.2.4.1.2.6 - 4.2.4.1.2.7 - 4.2.4.1.2.8 NTC18

Verifiche eseguite utilizzando la formula conservativa (6.2) §6.2.1 EN 1993-1-1:2005.

X	Comb.	Sfruttamento	Classe	NEd	NRd	Rid. NRd da VEd	My,Ed	My,Rd	Rid. My,Rd da VEd	Rid. My,Rd da NEd	ρx	ρy	Verifica
11.3	SLD 9	0.01	1	670.3	101662.9	1	969	308186	1		0	0	Si

Verifica a presso/tenso flessione deviata §§ 4.2.4.1.2.3 - 4.2.4.1.2.6 - 4.2.4.1.2.7 - 4.2.4.1.2.8 NTC18

Verifiche eseguite utilizzando la formula conservativa (6.2) §6.2.1 EN 1993-1-1:2005.

X	Comb.	Sfruttamento	Classe	NEd	NRd	Rid. NRd da VEd	Mx,Ed	Mx,Rd	My,Ed	My,Rd	Rid. Mx,Rd da VEd	Rid. Mx,Rd da NEd	Rid. My,Rd da VEd	Rid. My,Rd da NEd	α	β	ρx	ρy	Verifica
192.1	SLV 10	0.022	1	670.3	101662.9	1	-4466	642783	2553	308186	1		1				0	0	Si

Verifica a presso/tenso flessione deviata SLD §§ 4.2.4.1.2.3 - 4.2.4.1.2.6 - 4.2.4.1.2.7 - 4.2.4.1.2.8 NTC18

Verifiche eseguite utilizzando la formula conservativa (6.2) §6.2.1 EN 1993-1-1:2005.

X	Comb.	Sfruttamento	Classe	NEd	NRd	Rid. NRd da VEd	Mx,Ed	Mx,Rd	My,Ed	My,Rd	Rid. Mx,Rd da VEd	Rid. Mx,Rd da NEd	Rid. My,Rd da VEd	Rid. My,Rd da NEd	α	β	ρx	ρy	Verifica
180.8	SLD 9	0.017	1	670.3	101662.9	1	-4416	642783	969	308186	1		1				0	0	Si

Verifiche ad instabilità

Caratteristiche iniziali

Membratura principale per controllo snellezza; Calcolo di snellezze ed N critici condotti secondo gli assi principali;
Curva X: b; Curva Y: c; Svergolamento: Carico all'estradosso; Curva svergolamento: b;

Dati per instabilità attorno a x

Numero rit.	Presente	Ascissa	Campata	βx/m	Vincolo a entrambi estremi	λx/m	λVer
1	Si	0					
			1-2	1	Si	51.6	Si, (<200)
2	Si	339					

Dati per instabilità attorno a y

Numero rit.	Presente	Ascissa	Campata	βy/n	k,LT	kw,LT	Vincolo a entrambi estremi	λy/n	λVer
1	Si	0							
			1-2	1	1	1	Si	85.1	Si, (<200)
2	Si	339							

Verifica a svergolamento con trazione §4.2.4.1.3.2 NTC18 - §5.5.3 ENV 1993-1-1:1994

X	Comb.	Sfruttamento	Classe	Obblig.	NEd	Mx,Ed	Mx,Eff,Ed	Mb,Rd,x	χ,LT	λ adim. LT	L,LT	M,critico	Verifica
169.5	SLU 67	0.004	1	Si	871.4	-5723.3	-2260.7	514049.3	0.8	0.831	339	976699	Si

Verifica di stabilità per tenso-flessione deviata §5.5.3 - §5.5.4 ENV 1993-1-1:1994

X	Comb.	Sfruttamento	Classe	NEd	Mx,Ed	Mx,Eff,Ed	My,Ed	χ,LT	kLT	ky	M,critico	Wx	Wy	Verifica
192.1	SLV 9	0.012	1	670.3	-4465.6	-1802	2552.7	0.8	1	1	976699	245.4	117.7	Si

Verifica di stabilità per tenso-flessione deviata SLD §5.5.3 - §5.5.4 ENV 1993-1-1:1994

X	Comb.	Sfruttamento	Classe	NEd	Mx,Ed	Mx,Eff,Ed	My,Ed	χ,LT	kLT	ky	M,critico	Wx	Wy	Verifica
180.8	SLD 9	0.007	1	670.3	-4415.8	-1752.2	968.8	0.8	1	1	976699	245.4	117.7	Si

Verifica di stabilità a taglio anima Y §4.2.4.1.2.4 [4.2.27] NTC18

η	hw	tw	hw/tw max	Verifica
1.2	13.4	0.6	55.46	Si

Verifica di stabilità a taglio anima Y SLD §4.2.4.1.2.4 [4.2.27] NTC18

η	hw	tw	hw/tw max	Verifica
1.2	13.4	0.6	55.46	Si

Verifiche a deformabilità

Mensola X: No; Mensola Y: No.

Frecce lungo X

Ascissa freccia	Combinazione	Freccia	Luce	L/f	L/f,min	Tipo	Verifica
169.5	SLE RA 1	0	339	10000	250	Totale	Si
169.5	SLE RA 31	0	339	10000	250	Totale	Si
169.5	SLE RA 30	0	339	10000	250	Totale	Si
169.5	SLE RA 29	0	339	10000	250	Totale	Si
169.5	SLE RA 28	0	339	10000	250	Totale	Si
169.5	SLE RA 2	0	339	10000	350	Variabile	Si
169.5	SLE RA 31	0	339	10000	350	Variabile	Si
169.5	SLE RA 30	0	339	10000	350	Variabile	Si
169.5	SLE RA 29	0	339	10000	350	Variabile	Si
169.5	SLE RA 28	0	339	10000	350	Variabile	Si

Frecce lungo Y

Ascissa freccia	Combinazione	Freccia	Luce	L/f	L/f,min	Tipo	Verifica
169.5	SLE RA 19	-0.112	339	3034.3	250	Totale	Si
169.5	SLE RA 18	-0.112	339	3034.3	250	Totale	Si
169.5	SLE RA 7	-0.112	339	3034.3	250	Totale	Si
169.5	SLE RA 6	-0.112	339	3034.3	250	Totale	Si
169.5	SLE RA 15	-0.111	339	3057.6	250	Totale	Si
169.5	SLE RA 19	-0.096	339	3527	350	Variabile	Si
169.5	SLE RA 18	-0.096	339	3527	350	Variabile	Si
169.5	SLE RA 7	-0.096	339	3527	350	Variabile	Si
169.5	SLE RA 6	-0.096	339	3527	350	Variabile	Si
169.5	SLE RA 15	-0.095	339	3558.6	350	Variabile	Si

Superelemento in acciaio composto dall'asta 101

Caratteristiche del materiale

Acciaio: S275, fyk = 2750

Caratteristiche geometriche

Lunghezza: 128
Nodo iniziale: 50 Nodo finale: 49
Cerniera iniziale: No Cerniera finale: Svincolo: M2, M3
Sovraresistenza: 0% Sisma Z: No

Caratteristiche della sezione

Sezione	Rotazione	Area	Jx	Jy	ix	iy	Wx	Wy	Wplx	Wply
HEA160	0	38.82	1674.7	615.62	6.57	3.98	220.36	76.95	245.43	117.67

Verifiche di resistenza

Verifiche a forza assiale §4.2.4.1.2.1 - §4.2.4.1.2.2 NTC18

X	Comb.	Sfruttamento	Classe	NEd	Nc,Rd	Nt,Rd	Riduzione da taglio	ρx	ρy	Verifica
128	SLU 118	0.276		28074.4		101662.9	1	0	0	Si

Verifiche a forza assiale SLD §4.2.4.1.2.1 - §4.2.4.1.2.2 NTC18

X	Comb.	Sfruttamento	Classe	NEd	Nc,Rd	Nt,Rd	Riduzione da taglio	ρx	ρy	Verifica
0	SLD 1	0.02		2012.5		101662.9	1	0	0	Si

Verifica a taglio X §4.2.4.1.2.4 NTC18

X	Comb.	Sfruttamento	VEd	Vc,Rd	Av	Interazione taglio-torsione	Riduzione torsione	Verifica
128	SLV 12	0.001	-48.4	43042.3	30.78	Considerata	0.92	Si

Verifica a taglio Y §4.2.4.1.2.4 NTC18

X	Comb.	Sfruttamento	VEd	Vc,Rd	Av	Interazione taglio-torsione	Riduzione torsione	Verifica
0	SLU 118	0.018	351.7	20045.7	13.26	Considerata	1	Si

Verifica a taglio Y SLD §4.2.4.1.2.4 NTC18

X	Comb.	Sfruttamento	VEd	Vc,Rd	Av	Interazione taglio-torsione	Riduzione torsione	Verifica
0	SLD 1	0.003	57.1	19880.1	13.26	Considerata	0.99	Si

Verifica a torsione §4.2.4.1.2.5 NTC18

X	Comb.	Sfruttamento torsione	TEd	TRd	Riduzione taglio resistente	Sfruttamento taglio-torsione	τEd,totale	τRd	Verifica
68.3	SLV 5	0.181	2654.2	14685.6	Considerata				Si

Verifica a torsione SLD §4.2.4.1.2.5 NTC18

X	Comb.	Sfruttamento torsione	TEd	TRd	Riduzione taglio resistente	Sfruttamento taglio-torsione	τEd,totale	τRd	Verifica
68.3	SLD 5	0.069	1006.4	14685.6	Considerata				Si

Verifica a presso/tenso flessione retta X §§ 4.2.4.1.2.3 - 4.2.4.1.2.6 - 4.2.4.1.2.7 - 4.2.4.1.2.8 NTC18

Verifiche eseguite utilizzando la formula conservativa (6.2) §6.2.1 EN 1993-1-1:2005.

X	Comb.	Sfruttamento	Classe	NEd	NRd	Rid. NRd da VEd	Mx,Ed	Mx,Rd	Rid. Mx,Rd da VEd	Rid. Mx,Rd da NEd	ρx	ρy	Verifica
0	SLU 85	0.341	1	28074.4	101662.9	1	41778	642783	1		0	0	Si

Verifica a presso/tenso flessione retta X SLD §§ 4.2.4.1.2.3 - 4.2.4.1.2.6 - 4.2.4.1.2.7 - 4.2.4.1.2.8 NTC18

Verifiche eseguite utilizzando la formula conservativa (6.2) §6.2.1 EN 1993-1-1:2005.

X	Comb.	Sfruttamento	Classe	NEd	NRd	Rid. NRd da VEd	Mx,Ed	Mx,Rd	Rid. Mx,Rd da VEd	Rid. Mx,Rd da NEd	ρx	ρy	Verifica
115.2	SLD 1	0.02	1	2012.5	101662.9	1	257	642783	1		0	0	Si

Verifica a presso/tenso flessione retta Y §§ 4.2.4.1.2.3 - 4.2.4.1.2.6 - 4.2.4.1.2.7 - 4.2.4.1.2.8 NTC18

Verifiche eseguite utilizzando la formula conservativa (6.2) §6.2.1 EN 1993-1-1:2005.

X	Comb.	Sfruttamento	Classe	NEd	NRd	Rid. NRd da VEd	My,Ed	My,Rd	Rid. My,Rd da VEd	Rid. My,Rd da NEd	ρx	ρy	Verifica
0	SLV 12	0.037	1	1700.5	101662.9	1	6192	308186	1		0	0	Si

Verifica a presso/tenso flessione retta Y SLD §§ 4.2.4.1.2.3 - 4.2.4.1.2.6 - 4.2.4.1.2.7 - 4.2.4.1.2.8 NTC18

Verifiche eseguite utilizzando la formula conservativa (6.2) §6.2.1 EN 1993-1-1:2005.

X	Comb.	Sfruttamento	Classe	NEd	NRd	Rid. NRd da VEd	My,Ed	My,Rd	Rid. My,Rd da VEd	Rid. My,Rd da NEd	ρx	ρy	Verifica
29.9	SLD 11	0.023	1	1766.1	101662.9	1	1800	308186	1		0	0	Si

Verifica a presso/tenso flessione deviata §§ 4.2.4.1.2.3 - 4.2.4.1.2.6 - 4.2.4.1.2.7 - 4.2.4.1.2.8 NTC18

Verifiche eseguite utilizzando la formula conservativa (6.2) §6.2.1 EN 1993-1-1:2005.

X	Comb.	Sfruttamento	Classe	NEd	NRd	Rid. NRd da VEd	Mx,Ed	Mx,Rd	My,Ed	My,Rd	Rid. Mx,Rd da VEd	Rid. Mx,Rd da NEd	Rid. My,Rd da VEd	Rid. My,Rd da NEd	α	β	ρx	ρy	Verifica
0	SLV 8	0.045	1	1945.5	101662.9	1	3738	642783	6192	308186	1		1				0	0	Si

Verifica a presso/tenso flessione deviata SLD §§ 4.2.4.1.2.3 - 4.2.4.1.2.6 - 4.2.4.1.2.7 - 4.2.4.1.2.8 NTC18

Verifiche eseguite utilizzando la formula conservativa (6.2) §6.2.1 EN 1993-1-1:2005.

X	Comb.	Sfruttamento	Classe	NEd	NRd	Rid. NRd da VEd	Mx,Ed	Mx,Rd	My,Ed	My,Rd	Rid. Mx,Rd da VEd	Rid. Mx,Rd da NEd	Rid. My,Rd da VEd	Rid. My,Rd da NEd	α	β	ρx	ρy	Verifica
0	SLD 7	0.03	1	1879.8	101662.9	1	2685	642783	2348	308186	1		1				0	0	Si

Verifiche ad instabilità

Caratteristiche iniziali

Membratura principale per controllo snellezza; Calcolo di snellezze ed N critici condotti secondo gli assi principali;
Curva X: b; Curva Y: c; Svergolamento: Carico all'estradosso; Curva svergolamento: b;

Dati per instabilità attorno a x

Numero rit.	Presente	Ascissa	Campata	βx/m	Vincolo a entrambi estremi	λx/m	λVer
1	Si	0					
			1-2	1	Si	19.5	Si, (<200)
2	Si	128					

Dati per instabilità attorno a y

Numero rit.	Presente	Ascissa	Campata	βy/n	k,LT	kw,LT	Vincolo a entrambi estremi	λy/n	λVer
1	Si	0							
			1-2	1	1	1	Si	32.1	Si, (<200)
2	Si	128							

Verifica di stabilità a taglio anima Y §4.2.4.1.2.4 [4.2.27] NTC18

η	hw	tw	hw/tw max	Verifica
1.2	13.4	0.6	55.46	Si

Verifica di stabilità a taglio anima Y SLD §4.2.4.1.2.4 [4.2.27] NTC18

η	hw	tw	hw/tw max	Verifica
1.2	13.4	0.6	55.46	Si

Verifiche a deformabilità

Mensola X: No; Mensola Y: No.

Frecce lungo X

Ascissa freccia	Combinazione	Freccia	Luce	L/f	L/f,min	Tipo	Verifica
55.5	SLE RA 1	0	128	10000	250	Totale	Si
55.5	SLE RA 31	0	128	10000	250	Totale	Si
55.5	SLE RA 30	0	128	10000	250	Totale	Si
55.5	SLE RA 29	0	128	10000	250	Totale	Si
55.5	SLE RA 28	0	128	10000	250	Totale	Si
55.5	SLE RA 2	0	128	10000	350	Variabile	Si
55.5	SLE RA 31	0	128	10000	350	Variabile	Si
55.5	SLE RA 30	0	128	10000	350	Variabile	Si
55.5	SLE RA 29	0	128	10000	350	Variabile	Si
55.5	SLE RA 28	0	128	10000	350	Variabile	Si

Frecce lungo Y

Ascissa freccia	Combinazione	Freccia	Luce	L/f	L/f,min	Tipo	Verifica
34.1	SLE RA 1	0	128	10000	250	Totale	Si
55.5	SLE RA 31	0.006	128	10000	250	Totale	Si

Ascissa freccia	Combinazione	Freccia	Luce	L/f	L/f,min	Tipo	Verifica
38.4	SLE RA 30	0	128	10000	250	Totale	Si
55.5	SLE RA 29	0.006	128	10000	250	Totale	Si
34.1	SLE RA 28	0	128	10000	250	Totale	Si
55.5	SLE RA 2	0.008	128	10000	350	Variabile	Si
55.5	SLE RA 31	0.006	128	10000	350	Variabile	Si
55.5	SLE RA 30	0	128	10000	350	Variabile	Si
55.5	SLE RA 29	0.006	128	10000	350	Variabile	Si
55.5	SLE RA 28	0	128	10000	350	Variabile	Si

Superelemento in acciaio composto dall'asta 102

Caratteristiche del materiale

Acciaio: S275, fyk = 2750

Caratteristiche geometriche

Lunghezza: 197.7
Nodo iniziale: 15 Nodo finale: 51
Cerniera iniziale: Svincolo: M2, M3 Cerniera finale: Svincolo: M2, M3
Sovraresistenza: 0% Sisma Z: No

Caratteristiche della sezione

Sezione	Rotazione	Area	Jx	Jy	ix	iy	Wx	Wy	Wplx	Wply
HEA160	0	38.82	1674.7	615.62	6.57	3.98	220.36	76.95	245.43	117.67

Verifiche di resistenza

Verifiche a forza assiale §4.2.4.1.2.1 - §4.2.4.1.2.2 NTC18

X	Comb.	Sfruttamento	Classe	NEd	Nc,Rd	Nt,Rd	Riduzione da taglio	ρx	ρy	Verifica
0	SLU 85	0.611	1	-62079.3	101662.9		1	0	0	Si

Verifiche a forza assiale SLD §4.2.4.1.2.1 - §4.2.4.1.2.2 NTC18

X	Comb.	Sfruttamento	Classe	NEd	Nc,Rd	Nt,Rd	Riduzione da taglio	ρx	ρy	Verifica
0	SLD 14	0.067	1	-6813.8	101662.9		1	0	0	Si

Verifica a taglio Y §4.2.4.1.2.4 NTC18

X	Comb.	Sfruttamento	VEd	Vc,Rd	Av	Interazione taglio-torsione	Riduzione torsione	Verifica
197.7	SLU 114	0.002	-33.8	20045.7	13.26	Considerata	1	Si

Verifica a taglio Y SLD §4.2.4.1.2.4 NTC18

X	Comb.	Sfruttamento	VEd	Vc,Rd	Av	Interazione taglio-torsione	Riduzione torsione	Verifica
0	SLD 5	0.001	26	19633.7	13.26	Considerata	0.98	Si

Verifica a torsione §4.2.4.1.2.5 NTC18

X	Comb.	Sfruttamento torsione	TEd	TRd	Riduzione taglio resistente	Sfruttamento taglio-torsione	τEd,totale	τRd	Verifica
105.4	SLV 5	0.134	-1969.6	14685.6	Considerata				Si

Verifica a torsione SLD §4.2.4.1.2.5 NTC18

X	Comb.	Sfruttamento torsione	TEd	TRd	Riduzione taglio resistente	Sfruttamento taglio-torsione	τEd,totale	τRd	Verifica
105.4	SLD 5	0.051	-746.8	14685.6	Considerata				Si

Verifica a presso/tenso flessione retta X §§ 4.2.4.1.2.3 - 4.2.4.1.2.6 - 4.2.4.1.2.7 - 4.2.4.1.2.8 NTC18

Verifiche eseguite utilizzando la formula conservativa (6.2) §6.2.1 EN 1993-1-1:2005.

X	Comb.	Sfruttamento	Classe	NEd	NRd	Rid. NRd da VEd	Mx,Ed	Mx,Rd	Rid. Mx,Rd da VEd	Rid. Mx,Rd da NEd	ρx	ρy	Verifica
92.2	SLU 85	0.613	1	-62060.8	101662.9	1	-1661	642783	1		0	0	Si

Verifica a presso/tenso flessione retta X SLD §§ 4.2.4.1.2.3 - 4.2.4.1.2.6 - 4.2.4.1.2.7 - 4.2.4.1.2.8 NTC18

Verifiche eseguite utilizzando la formula conservativa (6.2) §6.2.1 EN 1993-1-1:2005.

X	Comb.	Sfruttamento	Classe	NEd	NRd	Rid. NRd da VEd	Mx,Ed	Mx,Rd	Rid. Mx,Rd da VEd	Rid. Mx,Rd da NEd	ρx	ρy	Verifica
92.2	SLD 14	0.069	1	-6799.6	101662.9	1	-1278	642783	1		0	0	Si

Verifiche ad instabilità

Caratteristiche iniziali

Membratura principale per controllo snellezza; Calcolo di snellezze ed N critici condotti secondo gli assi principali;
Curva X: b; Curva Y: c; Svergolamento: Carico all'estradosso; Curva svergolamento: b;

Dati per instabilità attorno a x

Numero rit.	Presente	Ascissa	Campata	βx/m	Vincolo a entrambi estremi	λx/m	λVer
1	Si	0					
			1-2	1	Si	30.1	Si, (<200)
2	Si	197.7					

Dati per instabilità attorno a y

Numero rit.	Presente	Ascissa	Campata	βy/n	k,LT	kw,LT	Vincolo a entrambi estremi	λy/n	λVer
1	Si	0							

Numero rit.	Presente	Ascissa	Campata	βy/n	k,LT	kw,LT	Vincolo a entrambi estremi	λy/n	λVer
			1-2	1	1	1	Si	49.6	Si, (<200)
2	Si	197.7							

Verifica di stabilità per pressoflessione §C.4.2.4.1.3.3.2 NTC18

X	Comb.	Sfruttamento	Classe	NEd	NRk	Mx,Ed max	Mx,Rk	My,Ed max	My,Rk	χ,x	χ,y	kxx	kxy	kyx	kyy	χ,LT	Verifica
0	SLU 85	0.764	1	-62079.3	106746.1	1668.7	674922.6	1.5	323595.1	0.947	0.802	1.04	0.806	0.938	1.343	0.933	Si

Verifica di stabilità per pressoflessione SLD §C.4.2.4.1.3.3.2 NTC18

X	Comb.	Sfruttamento	Classe	NEd	NRk	Mx,Ed max	Mx,Rk	My,Ed max	My,Rk	χ,x	χ,y	kxx	kxy	kyx	kyy	χ,LT	Verifica
0	SLD 14	0.086	1	-6813.8	106746.1	1283.6	674922.6	1.1	323595.1	0.947	0.802	0.96	0.596	0.993	0.993	0.933	Si

Verifica di stabilità a taglio anima Y §4.2.4.1.2.4 [4.2.27] NTC18

η	hw	tw	hw/tw max	Verifica
1.2	13.4	0.6	55.46	Si

Verifica di stabilità a taglio anima Y SLD §4.2.4.1.2.4 [4.2.27] NTC18

η	hw	tw	hw/tw max	Verifica
1.2	13.4	0.6	55.46	Si

Verifiche a deformabilità

Mensola X: No; Mensola Y: No.

Frecce lungo X

Ascissa freccia	Combinazione	Freccia	Luce	L/f	L/f,min	Tipo	Verifica
98.8	SLE RA 1	0	197.7	10000	250	Totale	Si
98.8	SLE RA 31	0	197.7	10000	250	Totale	Si
98.8	SLE RA 30	0	197.7	10000	250	Totale	Si
98.8	SLE RA 29	0	197.7	10000	250	Totale	Si
98.8	SLE RA 28	0	197.7	10000	250	Totale	Si
177.9	SLE RA 2	0	197.7	10000	350	Variabile	Si
191.1	SLE RA 31	0	197.7	10000	350	Variabile	Si
105.4	SLE RA 30	0	197.7	10000	350	Variabile	Si
191.1	SLE RA 29	0	197.7	10000	350	Variabile	Si
191.1	SLE RA 28	0	197.7	10000	350	Variabile	Si

Frecce lungo Y

Ascissa freccia	Combinazione	Freccia	Luce	L/f	L/f,min	Tipo	Verifica
98.8	SLE RA 1	-0.002	197.7	10000	250	Totale	Si
98.8	SLE RA 31	-0.002	197.7	10000	250	Totale	Si
98.8	SLE RA 30	-0.002	197.7	10000	250	Totale	Si
98.8	SLE RA 29	-0.002	197.7	10000	250	Totale	Si
98.8	SLE RA 28	-0.002	197.7	10000	250	Totale	Si
151.5	SLE RA 2	0	197.7	10000	350	Variabile	Si
151.5	SLE RA 31	0	197.7	10000	350	Variabile	Si
138.4	SLE RA 30	0	197.7	10000	350	Variabile	Si
151.5	SLE RA 29	0	197.7	10000	350	Variabile	Si
151.5	SLE RA 28	0	197.7	10000	350	Variabile	Si

Superelemento in acciaio composto dall'asta 103

Caratteristiche del materiale

Acciaio: S275, fyk = 2750

Caratteristiche geometriche

Lunghezza: 197.7
Nodo iniziale: 14 Nodo finale: 50
Cerniera iniziale: Svincolo: M2, M3 Cerniera finale: Svincolo: M2, M3
Sovraresistenza: 0% Sisma Z: No

Caratteristiche della sezione

Sezione	Rotazione	Area	Jx	Jy	ix	iy	Wx	Wy	Wplx	Wply
HEA160	0	38.82	1674.7	615.62	6.57	3.98	220.36	76.95	245.43	117.67

Verifiche di resistenza

Verifiche a forza assiale §4.2.4.1.2.1 - §4.2.4.1.2.2 NTC18

X	Comb.	Sfruttamento	Classe	NEd	Nc,Rd	Nt,Rd	Riduzione da taglio	ρx	ρy	Verifica
0	SLU 118	0.611	1	-62079.3	101662.9		1	0	0	Si

Verifiche a forza assiale SLD §4.2.4.1.2.1 - §4.2.4.1.2.2 NTC18

X	Comb.	Sfruttamento	Classe	NEd	Nc,Rd	Nt,Rd	Riduzione da taglio	ρx	ρy	Verifica
0	SLD 1	0.067	1	-6813.8	101662.9		1	0	0	Si

Verifica a taglio Y §4.2.4.1.2.4 NTC18

X	Comb.	Sfruttamento	VEd	Vc,Rd	Av	Interazione taglio-torsione	Riduzione torsione	Verifica
197.7	SLU 101	0.002	-33.8	20045.7	13.26	Considerata	1	Si

Verifica a taglio Y SLD §4.2.4.1.2.4 NTC18

X	Comb.	Sfruttamento	VEd	Vc,Rd	Av	Interazione taglio-torsione	Riduzione torsione	Verifica
197.7	SLD 10	0.001	-26	19633.7	13.26	Considerata	0.98	Si

Verifica a torsione §4.2.4.1.2.5 NTC18

X	Comb.	Sfruttamento torsione	TEd	TRd	Riduzione taglio resistente	Sfruttamento taglio-torsione	τEd,totale	τRd	Verifica
197.7	SLV 10	0.134	1969.6	14685.6	Considerata				Si

Verifica a torsione SLD §4.2.4.1.2.5 NTC18

X	Comb.	Sfruttamento torsione	TEd	TRd	Riduzione taglio resistente	Sfruttamento taglio-torsione	τEd,totale	τRd	Verifica
197.7	SLD 10	0.051	746.8	14685.6	Considerata				Si

Verifica a presso/tenso flessione retta X §§ 4.2.4.1.2.3 - 4.2.4.1.2.6 - 4.2.4.1.2.7 - 4.2.4.1.2.8 NTC18

Verifiche eseguite utilizzando la formula conservativa (6.2) §6.2.1 EN 1993-1-1:2005.

X	Comb.	Sfruttamento	Classe	NEd	NRd	Rid. NRd da VEd	Mx,Ed	Mx,Rd	Rid. Mx,Rd da VEd	Rid. Mx,Rd da NEd	ρx	ρy	Verifica
92.2	SLU 85	0.613	1	-62060.8	101662.9	1	-1661	642783	1		0	0	Si

Verifica a presso/tenso flessione retta X SLD §§ 4.2.4.1.2.3 - 4.2.4.1.2.6 - 4.2.4.1.2.7 - 4.2.4.1.2.8 NTC18

Verifiche eseguite utilizzando la formula conservativa (6.2) §6.2.1 EN 1993-1-1:2005.

X	Comb.	Sfruttamento	Classe	NEd	NRd	Rid. NRd da VEd	Mx,Ed	Mx,Rd	Rid. Mx,Rd da VEd	Rid. Mx,Rd da NEd	ρx	ρy	Verifica
92.2	SLD 2	0.069	1	-6799.6	101662.9	1	-1278	642783	1		0	0	Si

Verifiche ad instabilità

Caratteristiche iniziali

Membratura principale per controllo snellezza; Calcolo di snellezze ed N critici condotti secondo gli assi principali;
Curva X: b; Curva Y: c; Svergolamento: Carico all'estradosso; Curva svergolamento: b;

Dati per instabilità attorno a x

Numero rit.	Presente	Ascissa	Campata	βx/m	Vincolo a entrambi estremi	λx/m	λVer
1	Si	0					
			1-2	1	Si	30.1	Si, (<200)
2	Si	197.7					

Dati per instabilità attorno a y

Numero rit.	Presente	Ascissa	Campata	βy/n	k,LT	kw,LT	Vincolo a entrambi estremi	λy/n	λVer
1	Si	0							
			1-2	1	1	1	Si	49.6	Si, (<200)
2	Si	197.7							

Verifica di stabilità per pressoflessione §C.4.2.4.1.3.3.2 NTC18

X	Comb.	Sfruttamento	Classe	NEd	NRk	Mx,Ed max	Mx,Rk	My,Ed max	My,Rk	χ,x	χ,y	kxx	kxy	kyx	kyy	χ,LT	Verifica
0	SLU 118	0.764	1	-62079.3	106746.1	1668.7	674922.6	0	323595.1	0.947	0.802	1.04	0.509	0.938	0.848	0.933	Si

Verifica di stabilità per pressoflessione SLD §C.4.2.4.1.3.3.2 NTC18

X	Comb.	Sfruttamento	Classe	NEd	NRk	Mx,Ed max	Mx,Rk	My,Ed max	My,Rk	χ,x	χ,y	kxx	kxy	kyx	kyy	χ,LT	Verifica
0	SLD 1	0.086	1	-6813.8	106746.1	1283.6	674922.6	0	323595.1	0.947	0.802	0.96	0.376	0.993	0.627	0.933	Si

Verifica di stabilità a taglio anima Y §4.2.4.1.2.4 [4.2.27] NTC18

η	hw	tw	hw/tw max	Verifica
1.2	13.4	0.6	55.46	Si

Verifica di stabilità a taglio anima Y SLD §4.2.4.1.2.4 [4.2.27] NTC18

η	hw	tw	hw/tw max	Verifica
1.2	13.4	0.6	55.46	Si

Verifiche a deformabilità

Mensola X: No; Mensola Y: No.

Frecce lungo X

Ascissa freccia	Combinazione	Freccia	Luce	L/f	L/f,min	Tipo	Verifica
158.1	SLE RA 1	0	197.7	10000	250	Totale	Si
191.1	SLE RA 31	0	197.7	10000	250	Totale	Si
191.1	SLE RA 30	0	197.7	10000	250	Totale	Si
191.1	SLE RA 29	0	197.7	10000	250	Totale	Si
191.1	SLE RA 28	0	197.7	10000	250	Totale	Si
177.9	SLE RA 2	0	197.7	10000	350	Variabile	Si
191.1	SLE RA 31	0	197.7	10000	350	Variabile	Si
191.1	SLE RA 30	0	197.7	10000	350	Variabile	Si
191.1	SLE RA 29	0	197.7	10000	350	Variabile	Si
191.1	SLE RA 28	0	197.7	10000	350	Variabile	Si

Frecce lungo Y

Ascissa freccia	Combinazione	Freccia	Luce	L/f	L/f,min	Tipo	Verifica
98.8	SLE RA 1	-0.002	197.7	10000	250	Totale	Si
98.8	SLE RA 31	-0.002	197.7	10000	250	Totale	Si
98.8	SLE RA 30	-0.002	197.7	10000	250	Totale	Si
98.8	SLE RA 29	-0.002	197.7	10000	250	Totale	Si
98.8	SLE RA 28	-0.002	197.7	10000	250	Totale	Si
125.2	SLE RA 2	0	197.7	10000	350	Variabile	Si
151.5	SLE RA 31	0	197.7	10000	350	Variabile	Si
171.3	SLE RA 30	0	197.7	10000	350	Variabile	Si
177.9	SLE RA 29	0	197.7	10000	350	Variabile	Si
171.3	SLE RA 28	0	197.7	10000	350	Variabile	Si

Superelemento in acciaio composto dall'asta 104

Caratteristiche del materiale

Acciaio: S275, fyk = 2750

Caratteristiche geometriche

Lunghezza: 88.1
Nodo iniziale: 51 Nodo finale: 82
Cerniera iniziale: Svincolo: M2, M3 Cerniera finale: Svincolo: M2, M3
Sovraresistenza: 0% Sisma Z: No

Caratteristiche della sezione

Sezione	Rotazione	Area	Jx	Jy	ix	iy	Wx	Wy	Wplx	Wply
HEA160	0	38.82	1674.7	615.62	6.57	3.98	220.36	76.95	245.43	117.67

Verifiche di resistenza

Verifiche a forza assiale §4.2.4.1.2.1 - §4.2.4.1.2.2 NTC18

X	Comb.	Sfruttamento	Classe	NEd	Nc,Rd	Nt,Rd	Riduzione da taglio	ρx	ρy	Verifica
88.1	SLU 40	0.065		6581.8		101662.9	1	0	0	Si

Verifiche a forza assiale SLD §4.2.4.1.2.1 - §4.2.4.1.2.2 NTC18

X	Comb.	Sfruttamento	Classe	NEd	Nc,Rd	Nt,Rd	Riduzione da taglio	ρx	ρy	Verifica
0	SLD 14	0.005	1	-512	101662.9		1	0	0	Si

Verifica a taglio Y §4.2.4.1.2.4 NTC18

X	Comb.	Sfruttamento	VEd	Vc,Rd	Av	Interazione taglio-torsione	Riduzione torsione	Verifica
0	SLU 84	0.001	14.4	20045.7	13.26	Considerata	1	Si

Verifica a torsione §4.2.4.1.2.5 NTC18

X	Comb.	Sfruttamento torsione	TEd	TRd	Riduzione taglio resistente	Sfruttamento taglio-torsione	τEd,totale	τRd	Verifica
88.1	SLV 8	0.056	825.9	14685.6	Considerata				Si

Verifica a torsione SLD §4.2.4.1.2.5 NTC18

X	Comb.	Sfruttamento torsione	TEd	TRd	Riduzione taglio resistente	Sfruttamento taglio-torsione	τEd,totale	τRd	Verifica
88.1	SLD 8	0.021	313.2	14685.6	Considerata				Si

Verifica a presso/tenso flessione retta X §§ 4.2.4.1.2.3 - 4.2.4.1.2.6 - 4.2.4.1.2.7 - 4.2.4.1.2.8 NTC18

Verifiche eseguite utilizzando la formula conservativa (6.2) §6.2.1 EN 1993-1-1:2005.

X	Comb.	Sfruttamento	Classe	NEd	NRd	Rid. NRd da VEd	Mx,Ed	Mx,Rd	Rid. Mx,Rd da VEd	Rid. Mx,Rd da NEd	ρx	ρy	Verifica
47	SLU 40	0.065	1	6574.7	101662.9	1	-242	642783	1		0	0	Si

Verifica a presso/tenso flessione retta X SLD §§ 4.2.4.1.2.3 - 4.2.4.1.2.6 - 4.2.4.1.2.7 - 4.2.4.1.2.8 NTC18

Verifiche eseguite utilizzando la formula conservativa (6.2) §6.2.1 EN 1993-1-1:2005.

X	Comb.	Sfruttamento	Classe	NEd	NRd	Rid. NRd da VEd	Mx,Ed	Mx,Rd	Rid. Mx,Rd da VEd	Rid. Mx,Rd da NEd	ρx	ρy	Verifica
41.1	SLD 13	0.005	1	-504.9	101662.9	1	-242	642783	1		0	0	Si

Verifiche ad instabilità

Caratteristiche iniziali

Membratura principale per controllo snellezza; Calcolo di snellezze ed N critici condotti secondo gli assi principali;
Curva X: b; Curva Y: c; Svergolamento: Carico all'estradosso; Curva svergolamento: b;

Dati per instabilità attorno a x

Numero rit.	Presente	Ascissa	Campata	βx/m	Vincolo a entrambi estremi	λx/m	λVer
1	Si	0					
			1-2	1	Si	13.4	Si, (<200)
2	Si	88.1					

Dati per instabilità attorno a y

Numero rit.	Presente	Ascissa	Campata	βy/n	k,LT	kw,LT	Vincolo a entrambi estremi	λy/n	λVer
1	Si	0							
			1-2	1	1	1	Si	22.1	Si, (<200)
2	Si	88.1							

Verifica di stabilità per pressoflessione §C.4.2.4.1.3.3.2 NTC18

X	Comb.	Sfruttamento	Classe	NEd	NRk	Mx,Ed max	Mx,Rk	My,Ed max	My,Rk	χ,x	χ,y	kxx	kxy	kyx	kyy	χ,LT	Verifica
0	SLU 125	0.006	1	-582.7	106746.1	316.2	674922.6	0	323595.1	1	0.972	0.95	0.36	0.855	0.6	1	Si

Verifica di stabilità per pressoflessione SLD §C.4.2.4.1.3.3.2 NTC18

X	Comb.	Sfruttamento	Classe	NEd	NRk	Mx,Ed max	Mx,Rk	My,Ed max	My,Rk	χ,x	χ,y	kxx	kxy	kyx	kyy	χ,LT	Verifica
0	SLD 14	0.006	1	-512	106746.1	243.2	674922.6	0	323595.1	1	0.972	0.95	0.36	0.855	0.6	1	Si

Verifica di stabilità a taglio anima Y §4.2.4.1.2.4 [4.2.27] NTC18

η	hw	tw	hw/tw max	Verifica
1.2	13.4	0.6	55.46	Si

Verifica di stabilità a taglio anima Y SLD §4.2.4.1.2.4 [4.2.27] NTC18

η	hw	tw	hw/tw max	Verifica
1.2	13.4	0.6	55.46	Si

Verifiche a deformabilità

Mensola X: No; Mensola Y: No.

Frecce lungo X

Ascissa freccia	Combinazione	Freccia	Luce	L/f	L/f,min	Tipo	Verifica
20.5	SLE RA 1	0	88.1	10000	250	Totale	Si
82.2	SLE RA 31	0	88.1	10000	250	Totale	Si
82.2	SLE RA 30	0	88.1	10000	250	Totale	Si
82.2	SLE RA 29	0	88.1	10000	250	Totale	Si
82.2	SLE RA 28	0	88.1	10000	250	Totale	Si
41.1	SLE RA 2	0	88.1	10000	350	Variabile	Si
55.8	SLE RA 31	0	88.1	10000	350	Variabile	Si
55.8	SLE RA 30	0	88.1	10000	350	Variabile	Si
55.8	SLE RA 29	0	88.1	10000	350	Variabile	Si
55.8	SLE RA 28	0	88.1	10000	350	Variabile	Si

Frecce lungo Y

Ascissa freccia	Combinazione	Freccia	Luce	L/f	L/f,min	Tipo	Verifica
44	SLE RA 1	0	88.1	10000	250	Totale	Si
44	SLE RA 31	0	88.1	10000	250	Totale	Si
44	SLE RA 30	0	88.1	10000	250	Totale	Si
44	SLE RA 29	0	88.1	10000	250	Totale	Si
44	SLE RA 28	0	88.1	10000	250	Totale	Si
11.7	SLE RA 2	0	88.1	10000	350	Variabile	Si
55.8	SLE RA 31	0	88.1	10000	350	Variabile	Si
5.9	SLE RA 30	0	88.1	10000	350	Variabile	Si
85.1	SLE RA 29	0	88.1	10000	350	Variabile	Si
67.5	SLE RA 28	0	88.1	10000	350	Variabile	Si

Superelemento in acciaio composto dall'asta 105

Caratteristiche del materiale

Acciaio: S275, fyk = 2750

Caratteristiche geometriche

Lunghezza: 88.1
Nodo iniziale: 50 Nodo finale: 81
Cerniera iniziale: Svincolo: M2, M3 Cerniera finale: Svincolo: M2, M3
Sovraresistenza: 0% Sisma Z: No

Caratteristiche della sezione

Sezione	Rotazione	Area	Jx	Jy	ix	iy	Wx	Wy	Wplx	Wply
HEA160	0	38.82	1674.7	615.62	6.57	3.98	220.36	76.95	245.43	117.67

Verifiche di resistenza

Verifiche a forza assiale §4.2.4.1.2.1 - §4.2.4.1.2.2 NTC18

X	Comb.	Sfruttamento	Classe	NEd	Nc,Rd	Nt,Rd	Riduzione da taglio	ρx	ρy	Verifica
88.1	SLU 19	0.065		6581.8		101662.9	1	0	0	Si

Verifiche a forza assiale SLD §4.2.4.1.2.1 - §4.2.4.1.2.2 NTC18

X	Comb.	Sfruttamento	Classe	NEd	Nc,Rd	Nt,Rd	Riduzione da taglio	ρx	ρy	Verifica
0	SLD 1	0.005	1	-512	101662.9		1	0	0	Si

Verifica a taglio Y §4.2.4.1.2.4 NTC18

X	Comb.	Sfruttamento	VEd	Vc,Rd	Av	Interazione taglio-torsione	Riduzione torsione	Verifica
0	SLU 84	0.001	14.4	20045.7	13.26	Considerata	1	Si

Verifica a torsione §4.2.4.1.2.5 NTC18

X	Comb.	Sfruttamento torsione	TEd	TRd	Riduzione taglio resistente	Sfruttamento taglio-torsione	τEd,totale	τRd	Verifica
41.1	SLV 12	0.056	-825.9	14685.6	Considerata				Si

Verifica a torsione SLD §4.2.4.1.2.5 NTC18

X	Comb.	Sfruttamento torsione	TEd	TRd	Riduzione taglio resistente	Sfruttamento taglio-torsione	τEd,totale	τRd	Verifica
41.1	SLD 12	0.021	-313.2	14685.6	Considerata				Si

Verifica a presso/tenso flessione retta X §§ 4.2.4.1.2.3 - 4.2.4.1.2.6 - 4.2.4.1.2.7 - 4.2.4.1.2.8 NTC18

Verifiche eseguite utilizzando la formula conservativa (6.2) §6.2.1 EN 1993-1-1:2005.

X	Comb.	Sfruttamento	Classe	NEd	NRd	Rid. NRd da VEd	Mx,Ed	Mx,Rd	Rid. Mx,Rd da VEd	Rid. Mx,Rd da NEd	ρx	ρy	Verifica
47	SLU 19	0.065	1	6574.7	101662.9	1	-242	642783	1		0	0	Si

Verifica a presso/tenso flessione retta X SLD §§ 4.2.4.1.2.3 - 4.2.4.1.2.6 - 4.2.4.1.2.7 - 4.2.4.1.2.8 NTC18

Verifiche eseguite utilizzando la formula conservativa (6.2) §6.2.1 EN 1993-1-1:2005.

X	Comb.	Sfruttamento	Classe	NEd	NRd	Rid. NRd da VEd	Mx,Ed	Mx,Rd	Rid. Mx,Rd da VEd	Rid. Mx,Rd da NEd	ρx	ρy	Verifica
41.1	SLD 1	0.005	1	-504.9	101662.9	1	-242	642783	1		0	0	Si

Verifiche ad instabilità

Caratteristiche iniziali

Membratura principale per controllo snellezza; Calcolo di snellezze ed N critici condotti secondo gli assi principali;
Curva X: b; Curva Y: c; Svergolamento: Carico all'estradosso; Curva svergolamento: b;

Dati per instabilità attorno a x

Numero rit.	Presente	Ascissa	Campata	βx/m	Vincolo a entrambi estremi	λx/m	λVer
1	Si	0					
			1-2	1	Si	13.4	Si, (<200)
2	Si	88.1					

Dati per instabilità attorno a y

Numero rit.	Presente	Ascissa	Campata	βy/n	k,LT	kw,LT	Vincolo a entrambi estremi	λy/n	λVer
1	Si	0							
			1-2	1	1	1	Si	22.1	Si, (<200)
2	Si	88.1							

Verifica di stabilità per pressoflessione §C.4.2.4.1.3.3.2 NTC18

X	Comb.	Sfruttamento	Classe	NEd	NRk	Mx,Ed max	Mx,Rk	My,Ed max	My,Rk	χ,x	χ,y	kxx	kxy	kyx	kyy	χ,LT	Verifica
0	SLU 67	0.006	1	-582.7	106746.1	316.2	674922.6	0	323595.1	1	0.972	0.95	0.36	0.855	0.6	1	Si

Verifica di stabilità per pressoflessione SLD §C.4.2.4.1.3.3.2 NTC18

X	Comb.	Sfruttamento	Classe	NEd	NRk	Mx,Ed max	Mx,Rk	My,Ed max	My,Rk	χ,x	χ,y	kxx	kxy	kyx	kyy	χ,LT	Verifica
0	SLD 1	0.006	1	-512	106746.1	243.2	674922.6	0	323595.1	1	0.972	0.95	0.36	0.855	0.6	1	Si

Verifica di stabilità a taglio anima Y §4.2.4.1.2.4 [4.2.27] NTC18

η	hw	tw	hw/tw max	Verifica
1.2	13.4	0.6	55.46	Si

Verifica di stabilità a taglio anima Y SLD §4.2.4.1.2.4 [4.2.27] NTC18

η	hw	tw	hw/tw max	Verifica
1.2	13.4	0.6	55.46	Si

Verifiche a deformabilità

Mensola X: No; Mensola Y: No.

Frecce lungo X

Ascissa freccia	Combinazione	Freccia	Luce	L/f	L/f,min	Tipo	Verifica
20.5	SLE RA 1	0	88.1	10000	250	Totale	Si
85.1	SLE RA 31	0	88.1	10000	250	Totale	Si
85.1	SLE RA 30	0	88.1	10000	250	Totale	Si
85.1	SLE RA 29	0	88.1	10000	250	Totale	Si
85.1	SLE RA 28	0	88.1	10000	250	Totale	Si
41.1	SLE RA 2	0	88.1	10000	350	Variabile	Si
85.1	SLE RA 31	0	88.1	10000	350	Variabile	Si
85.1	SLE RA 30	0	88.1	10000	350	Variabile	Si
85.1	SLE RA 29	0	88.1	10000	350	Variabile	Si
85.1	SLE RA 28	0	88.1	10000	350	Variabile	Si

Frecce lungo Y

Ascissa freccia	Combinazione	Freccia	Luce	L/f	L/f,min	Tipo	Verifica
44	SLE RA 1	0	88.1	10000	250	Totale	Si
44	SLE RA 31	0	88.1	10000	250	Totale	Si
44	SLE RA 30	0	88.1	10000	250	Totale	Si
44	SLE RA 29	0	88.1	10000	250	Totale	Si
44	SLE RA 28	0	88.1	10000	250	Totale	Si
11.7	SLE RA 2	0	88.1	10000	350	Variabile	Si
41.1	SLE RA 31	0	88.1	10000	350	Variabile	Si
14.7	SLE RA 30	0	88.1	10000	350	Variabile	Si
85.1	SLE RA 29	0	88.1	10000	350	Variabile	Si
5.9	SLE RA 28	0	88.1	10000	350	Variabile	Si

Superelemento in acciaio composto dall'asta 106

Caratteristiche del materiale

Acciaio: S275, fyk = 2750

Caratteristiche geometriche

Lunghezza: 108.7
Nodo iniziale: 16 Nodo finale: 53
Cerniera iniziale: No Cerniera finale: No
Sovraresistenza: 0% Sisma Z: No

Caratteristiche della sezione

Sezione	Rotazione	Area	Jx	Jy	ix	iy	Wx	Wy	Wplx	Wply
HEA240	0	76.92	7771.3	2768.96	10.05	6	675.77	230.75	745.47	351.79

Verifiche di resistenza

Verifiche a forza assiale §4.2.4.1.2.1 - §4.2.4.1.2.2 NTC18

X	Comb.	Sfruttamento	Classe	NEd	Nc,Rd	Nt,Rd	Riduzione da taglio	ρx	ρy	Verifica
0	SLU 85	0.228	1	-45913	201468.8		1	0	0	Si

Verifiche a forza assiale SLD §4.2.4.1.2.1 - §4.2.4.1.2.2 NTC18

X	Comb.	Sfruttamento	Classe	NEd	Nc,Rd	Nt,Rd	Riduzione da taglio	ρx	ρy	Verifica
0	SLD 13	0.078	1	-15812.1	201468.8		1	0	0	Si

Verifica a taglio X §4.2.4.1.2.4 NTC18

X	Comb.	Sfruttamento	VEd	Vc,Rd	Av	Interazione taglio-torsione	Riduzione torsione	Verifica
79.7	SLV 5	0.004	340.8	91535.3	61.47	Considerata	0.98	Si

Verifica a taglio X SLD §4.2.4.1.2.4 NTC18

X	Comb.	Sfruttamento	VEd	Vc,Rd	Av	Interazione taglio-torsione	Riduzione torsione	Verifica
79.7	SLD 5	0.001	129.3	92422.5	61.47	Considerata	0.99	Si

Verifica a taglio Y §4.2.4.1.2.4 NTC18

X	Comb.	Sfruttamento	VEd	Vc,Rd	Av	Interazione taglio-torsione	Riduzione torsione	Verifica
108.7	SLU 85	0.123	-4714.9	38202.6	25.26	Considerata	1	Si

Verifica a taglio Y SLD §4.2.4.1.2.4 NTC18

X	Comb.	Sfruttamento	VEd	Vc,Rd	Av	Interazione taglio-torsione	Riduzione torsione	Verifica
108.7	SLD 3	0.049	-1886.6	38130.9	25.26	Considerata	1	Si

Verifica a torsione §4.2.4.1.2.5 NTC18

X	Comb.	Sfruttamento torsione	TEd	TRd	Riduzione taglio resistente	Sfruttamento taglio-torsione	τEd,totale	τRd	Verifica
108.7	SLV 8	0.038	1479.4	38489.3	Considerata				Si

Verifica a torsione SLD §4.2.4.1.2.5 NTC18

X	Comb.	Sfruttamento torsione	TEd	TRd	Riduzione taglio resistente	Sfruttamento taglio-torsione	τEd,totale	τRd	Verifica
108.7	SLD 8	0.015	563.5	38489.3	Considerata				Si

Verifica a presso/tenso flessione retta X §§ 4.2.4.1.2.3 - 4.2.4.1.2.6 - 4.2.4.1.2.7 - 4.2.4.1.2.8 NTC18

Verifiche eseguite utilizzando la formula conservativa (6.2) §6.2.1 EN 1993-1-1:2005.

X	Comb.	Sfruttamento	Classe	NEd	NRd	Rid. NRd da VEd	Mx,Ed	Mx,Rd	Rid. Mx,Rd da VEd	Rid. Mx,Rd da NEd	ρx	ρy	Verifica
108.7	SLU 85	0.363	1	-38329.6	201468.8	1	337163	1952423	1		0	0	Si

Verifica a presso/tenso flessione retta X SLD §§ 4.2.4.1.2.3 - 4.2.4.1.2.6 - 4.2.4.1.2.7 - 4.2.4.1.2.8 NTC18

Verifiche eseguite utilizzando la formula conservativa (6.2) §6.2.1 EN 1993-1-1:2005.

X	Comb.	Sfruttamento	Classe	NEd	NRd	Rid. NRd da VEd	Mx,Ed	Mx,Rd	Rid. Mx,Rd da VEd	Rid. Mx,Rd da NEd	ρx	ρy	Verifica
7.2	SLD 16	0.079	1	-15423.2	201468.8	1	-5196	1952423	1		0	0	Si

Verifica a presso/tenso flessione retta Y §§ 4.2.4.1.2.3 - 4.2.4.1.2.6 - 4.2.4.1.2.7 - 4.2.4.1.2.8 NTC18

Verifiche eseguite utilizzando la formula conservativa (6.2) §6.2.1 EN 1993-1-1:2005.

X	Comb.	Sfruttamento	Classe	NEd	NRd	Rid. NRd da VEd	My,Ed	My,Rd	Rid. My,Rd da VEd	Rid. My,Rd da NEd	ρx	ρy	Verifica
54.3	SLV 5	0.082	1	-12700.9	201468.8	1	17342	921364	1		0	0	Si

Verifica a presso/tenso flessione retta Y SLD §§ 4.2.4.1.2.3 - 4.2.4.1.2.6 - 4.2.4.1.2.7 - 4.2.4.1.2.8 NTC18

Verifiche eseguite utilizzando la formula conservativa (6.2) §6.2.1 EN 1993-1-1:2005.

X	Comb.	Sfruttamento	Classe	NEd	NRd	Rid. NRd da VEd	My,Ed	My,Rd	Rid. My,Rd da VEd	Rid. My,Rd da NEd	ρx	ρy	Verifica
0	SLD 9	0.079	1	-15729.4	201468.8	1	-445	921364	1		0	0	Si

Verifica a presso/tenso flessione deviata §§ 4.2.4.1.2.3 - 4.2.4.1.2.6 - 4.2.4.1.2.7 - 4.2.4.1.2.8 NTC18

Verifiche eseguite utilizzando la formula conservativa (6.2) §6.2.1 EN 1993-1-1:2005.

X	Comb.	Sfruttamento	Classe	NEd	NRd	Rid. NRd da VEd	Mx,Ed	Mx,Rd	My,Ed	My,Rd	Rid. Mx,Rd da VEd	Rid. Mx,Rd da NEd	Rid. My,Rd da VEd	Rid. My,Rd da NEd	α	β	ρx	ρy	Verifica
108.7	SLV 6	0.121	1	-9784.2	201468.8	1	66303	1952423	35860	921364	1		1				0	0	Si

Verifica a presso/tenso flessione deviata SLD §§ 4.2.4.1.2.3 - 4.2.4.1.2.6 - 4.2.4.1.2.7 - 4.2.4.1.2.8 NTC18

Verifiche eseguite utilizzando la formula conservativa (6.2) §6.2.1 EN 1993-1-1:2005.

X	Comb.	Sfruttamento	Classe	NEd	NRd	Rid. NRd da VEd	Mx,Ed	Mx,Rd	My,Ed	My,Rd	Rid. Mx,Rd da VEd	Rid. Mx,Rd da NEd	Rid. My,Rd da VEd	Rid. My,Rd da NEd	α	β	ρx	ρy	Verifica
108.7	SLD 6	0.095	1	-9825.1	201468.8	1	62375	1952423	13598	921364	1		1				0	0	Si

Verifiche ad instabilità

Caratteristiche iniziali

Membratura principale per controllo snellezza; Calcolo di snellezze ed N critici condotti secondo gli assi principali;
Curva X: b; Curva Y: c; Svergolamento: Carico all'estradosso; Curva svergolamento: b;

Dati per instabilità attorno a x

Numero rit.	Presente	Ascissa	Campata	βx/m	Vincolo a entrambi estremi	λx/m	λVer
1	Si	0					
			1-2	1	Si	10.8	Si, (<200)
2	Si	108.7					

Dati per instabilità attorno a y

Numero rit.	Presente	Ascissa	Campata	βy/n	k,LT	kw,LT	Vincolo a entrambi estremi	λy/n	λVer
1	Si	0							
			1-2	1	1	1	Si	18.1	Si, (<200)
2	Si	108.7							

Verifica di stabilità per pressoflessione §C.4.2.4.1.3.3.2 NTC18

X	Comb.	Sfruttamento	Classe	NEd	NRk	Mx,Ed max	Mx,Rk	My,Ed max	My,Rk	χ,x	χ,y	kxx	kxy	kyx	kyy	χ,LT	Verifica
0	SLU 85	0.369	1	-45913	211542.2	337163.4	2050044	45.1	967432.2	1	0.996	0.488	0.351	0.809	0.585	1	Si

Verifica di stabilità per pressoflessione SLD §C.4.2.4.1.3.3.2 NTC18

X	Comb.	Sfruttamento	Classe	NEd	NRk	Mx,Ed max	Mx,Rk	My,Ed max	My,Rk	χ,x	χ,y	kxx	kxy	kyx	kyy	χ,LT	Verifica
0	SLD 6	0.112	1	-15658.5	211542.2	62374.8	2050044	13598.3	967432.2	1	0.996	0.398	0.347	0.809	0.579	1	Si

Verifica di stabilità a taglio anima Y §4.2.4.1.2.4 [4.2.27] NTC18

η	hw	tw	hw/tw max	Verifica
1.2	20.6	0.8	55.46	Si

Verifica di stabilità a taglio anima Y SLD §4.2.4.1.2.4 [4.2.27] NTC18

η	hw	tw	hw/tw max	Verifica
1.2	20.6	0.8	55.46	Si

Verifiche a deformabilità

Mensola X: No; Mensola Y: No.

Frecce lungo X

Ascissa freccia	Combinazione	Freccia	Luce	L/f	L/f,min	Tipo	Verifica
65.2	SLE RA 1	0	108.7	10000	250	Totale	Si
61.6	SLE RA 31	0	108.7	10000	250	Totale	Si
65.2	SLE RA 30	0	108.7	10000	250	Totale	Si
61.6	SLE RA 29	0	108.7	10000	250	Totale	Si
65.2	SLE RA 28	0	108.7	10000	250	Totale	Si
61.6	SLE RA 2	0	108.7	10000	350	Variabile	Si
61.6	SLE RA 31	0	108.7	10000	350	Variabile	Si
61.6	SLE RA 30	0	108.7	10000	350	Variabile	Si
61.6	SLE RA 29	0	108.7	10000	350	Variabile	Si
61.6	SLE RA 28	0	108.7	10000	350	Variabile	Si

Frecce lungo Y

Ascissa freccia	Combinazione	Freccia	Luce	L/f	L/f,min	Tipo	Verifica
47.1	SLE RA 1	-0.002	108.7	10000	250	Totale	Si
72.4	SLE RA 31	0.004	108.7	10000	250	Totale	Si
43.5	SLE RA 30	-0.002	108.7	10000	250	Totale	Si
72.4	SLE RA 29	0.004	108.7	10000	250	Totale	Si
47.1	SLE RA 28	-0.002	108.7	10000	250	Totale	Si
61.6	SLE RA 2	0.008	108.7	10000	350	Variabile	Si
61.6	SLE RA 31	0.006	108.7	10000	350	Variabile	Si
61.6	SLE RA 30	0	108.7	10000	350	Variabile	Si
61.6	SLE RA 29	0.006	108.7	10000	350	Variabile	Si
61.6	SLE RA 28	0	108.7	10000	350	Variabile	Si

Superelemento in acciaio composto dall'asta 107

Caratteristiche del materiale

Acciaio: S275, fyk = 2750

Caratteristiche geometriche

Lunghezza: 108.7
Nodo iniziale: 17 Nodo finale: 56
Cerniera iniziale: No Cerniera finale: No
Sovraresistenza: 0% Sisma Z: No

Caratteristiche della sezione

Sezione	Rotazione	Area	Jx	Jy	ix	iy	Wx	Wy	Wplx	Wply
HEA240	0	76.92	7771.3	2768.96	10.05	6	675.77	230.75	745.47	351.79

Verifiche di resistenza

Verifiche a forza assiale §4.2.4.1.2.1 - §4.2.4.1.2.2 NTC18

X	Comb.	Sfruttamento	Classe	NEd	Nc,Rd	Nt,Rd	Riduzione da taglio	ρx	ρy	Verifica
0	SLU 118	0.228	1	-45909	201468.8		1	0	0	Si

Verifiche a forza assiale SLD §4.2.4.1.2.1 - §4.2.4.1.2.2 NTC18

X	Comb.	Sfruttamento	Classe	NEd	Nc,Rd	Nt,Rd	Riduzione da taglio	ρx	ρy	Verifica
0	SLD 1	0.078	1	-15812.1	201468.8		1	0	0	Si

Verifica a taglio X §4.2.4.1.2.4 NTC18

X	Comb.	Sfruttamento	VEd	Vc,Rd	Av	Interazione taglio-torsione	Riduzione torsione	Verifica
68.8	SLV 9	0.004	-340.8	91535.3	61.47	Considerata	0.98	Si

Verifica a taglio X SLD §4.2.4.1.2.4 NTC18

X	Comb.	Sfruttamento	VEd	Vc,Rd	Av	Interazione taglio-torsione	Riduzione torsione	Verifica
39.8	SLD 9	0.001	-129.3	92422.5	61.47	Considerata	0.99	Si

Verifica a taglio Y §4.2.4.1.2.4 NTC18

X	Comb.	Sfruttamento	VEd	Vc,Rd	Av	Interazione taglio-torsione	Riduzione torsione	Verifica
108.7	SLU 118	0.123	-4714.7	38202.6	25.26	Considerata	1	Si

Verifica a taglio Y SLD §4.2.4.1.2.4 NTC18

X	Comb.	Sfruttamento	VEd	Vc,Rd	Av	Interazione taglio-torsione	Riduzione torsione	Verifica
108.7	SLD 16	0.049	-1886.6	38130.9	25.26	Considerata	1	Si

Verifica a torsione §4.2.4.1.2.5 NTC18

X	Comb.	Sfruttamento torsione	TEd	TRd	Riduzione taglio resistente	Sfruttamento taglio-torsione	τEd,totale	τRd	Verifica
108.7	SLV 11	0.038	-1479.4	38489.3	Considerata				Si

Verifica a torsione SLD §4.2.4.1.2.5 NTC18

X	Comb.	Sfruttamento torsione	TEd	TRd	Riduzione taglio resistente	Sfruttamento taglio-torsione	τEd,totale	τRd	Verifica
50.7	SLD 12	0.015	-563.5	38489.3	Considerata				Si

Verifica a presso/tenso flessione retta X §§ 4.2.4.1.2.3 - 4.2.4.1.2.6 - 4.2.4.1.2.7 - 4.2.4.1.2.8 NTC18

Verifiche eseguite utilizzando la formula conservativa (6.2) §6.2.1 EN 1993-1-1:2005.

X	Comb.	Sfruttamento	Classe	NEd	NRd	Rid. NRd da VEd	Mx,Ed	Mx,Rd	Rid. Mx,Rd da VEd	Rid. Mx,Rd da NEd	ρx	ρy	Verifica
108.7	SLU 118	0.363	1	-38325.6	201468.8	1	337144	1952423	1		0	0	Si

Verifica a presso/tenso flessione retta X SLD §§ 4.2.4.1.2.3 - 4.2.4.1.2.6 - 4.2.4.1.2.7 - 4.2.4.1.2.8 NTC18

Verifiche eseguite utilizzando la formula conservativa (6.2) §6.2.1 EN 1993-1-1:2005.

X	Comb.	Sfruttamento	Classe	NEd	NRd	Rid. NRd da VEd	Mx,Ed	Mx,Rd	Rid. Mx,Rd da VEd	Rid. Mx,Rd da NEd	ρx	ρy	Verifica
7.2	SLD 3	0.079	1	-15423.2	201468.8	1	-5196	1952423	1		0	0	Si

Verifica a presso/tenso flessione retta Y §§ 4.2.4.1.2.3 - 4.2.4.1.2.6 - 4.2.4.1.2.7 - 4.2.4.1.2.8 NTC18

Verifiche eseguite utilizzando la formula conservativa (6.2) §6.2.1 EN 1993-1-1:2005.

X	Comb.	Sfruttamento	Classe	NEd	NRd	Rid. NRd da VEd	My,Ed	My,Rd	Rid. My,Rd da VEd	Rid. My,Rd da NEd	ρx	ρy	Verifica
54.3	SLV 9	0.082	1	-12700.9	201468.8	1	-17342	921364	1		0	0	Si

Verifica a presso/tenso flessione retta Y SLD §§ 4.2.4.1.2.3 - 4.2.4.1.2.6 - 4.2.4.1.2.7 - 4.2.4.1.2.8 NTC18

Verifiche eseguite utilizzando la formula conservativa (6.2) §6.2.1 EN 1993-1-1:2005.

X	Comb.	Sfruttamento	Classe	NEd	NRd	Rid. NRd da VEd	My,Ed	My,Rd	Rid. My,Rd da VEd	Rid. My,Rd da NEd	ρx	ρy	Verifica
0	SLD 5	0.079	1	-15729.4	201468.8	1	445	921364	1		0	0	Si

Verifica a presso/tenso flessione deviata §§ 4.2.4.1.2.3 - 4.2.4.1.2.6 - 4.2.4.1.2.7 - 4.2.4.1.2.8 NTC18

Verifiche eseguite utilizzando la formula conservativa (6.2) §6.2.1 EN 1993-1-1:2005.

X	Comb.	Sfruttamento	Classe	NEd	NRd	Rid. NRd da VEd	Mx,Ed	Mx,Rd	My,Ed	My,Rd	Rid. Mx,Rd da VEd	Rid. Mx,Rd da NEd	Rid. My,Rd da VEd	Rid. My,Rd da NEd	α	β	ρx	ρy	Verifica
108.7	SLV 10	0.121	1	-9784.2	201468.8	1	66303	1952423	-35860	921364	1		1				0	0	Si

Verifica a presso/tenso flessione deviata SLD §§ 4.2.4.1.2.3 - 4.2.4.1.2.6 - 4.2.4.1.2.7 - 4.2.4.1.2.8 NTC18

Verifiche eseguite utilizzando la formula conservativa (6.2) §6.2.1 EN 1993-1-1:2005.

X	Comb.	Sfruttamento	Classe	NEd	NRd	Rid. NRd da VEd	Mx,Ed	Mx,Rd	My,Ed	My,Rd	Rid. Mx,Rd da VEd	Rid. Mx,Rd da NEd	Rid. My,Rd da VEd	Rid. My,Rd da NEd	α	β	ρx	ρy	Verifica
108.7	SLD 9	0.095	1	-9825.1	201468.8	1	62375	1952423	-13598	921364	1		1				0	0	Si

Verifiche ad instabilità

Caratteristiche iniziali

Membratura principale per controllo snellezza; Calcolo di snellezze ed N critici condotti secondo gli assi principali;
Curva X: b; Curva Y: c; Svergolamento: Carico all'estradosso; Curva svergolamento: b;

Dati per instabilità attorno a x

Numero rit.	Presente	Ascissa	Campata	βx/m	Vincolo a entrambi estremi	λx/m	λVer
1	Si	0					
			1-2	1	Si	10.8	Si, (<200)
2	Si	108.7					

Dati per instabilità attorno a y

Numero rit.	Presente	Ascissa	Campata	βy/n	k,LT	kw,LT	Vincolo a entrambi estremi	λy/n	λVer
1	Si	0							
			1-2	1	1	1	Si	18.1	Si, (<200)
2	Si	108.7							

Verifica di stabilità per pressoflessione §C.4.2.4.1.3.3.2 NTC18

X	Comb.	Sfruttamento	Classe	NEd	NRk	Mx,Ed max	Mx,Rk	My,Ed max	My,Rk	χ,x	χ,y	kxx	kxy	kyx	kyy	χ,LT	Verifica
0	SLU 118	0.369	1	-45909	211542.2	337144.4	2050044	45.1	967432.2	1	0.996	0.488	0.351	0.809	0.585	1	Si

Verifica di stabilità per pressoflessione SLD §C.4.2.4.1.3.3.2 NTC18

X	Comb.	Sfruttamento	Classe	NEd	NRk	Mx,Ed max	Mx,Rk	My,Ed max	My,Rk	χ,x	χ,y	kxx	kxy	kyx	kyy	χ,LT	Verifica
0	SLD 9	0.112	1	-15658.5	211542.2	62374.8	2050044	13598.3	967432.2	1	0.996	0.398	0.347	0.809	0.579	1	Si

Verifica di stabilità a taglio anima Y §4.2.4.1.2.4 [4.2.27] NTC18

η	hw	tw	hw/tw max	Verifica
1.2	20.6	0.8	55.46	Si

Verifica di stabilità a taglio anima Y SLD §4.2.4.1.2.4 [4.2.27] NTC18

η	hw	tw	hw/tw max	Verifica
1.2	20.6	0.8	55.46	Si

Verifiche a deformabilità

Mensola X: No; Mensola Y: No.

Frecce lungo X

Ascissa freccia	Combinazione	Freccia	Luce	L/f	L/f,min	Tipo	Verifica
65.2	SLE RA 1	0	108.7	10000	250	Totale	Si
61.6	SLE RA 31	0	108.7	10000	250	Totale	Si
65.2	SLE RA 30	0	108.7	10000	250	Totale	Si
61.6	SLE RA 29	0	108.7	10000	250	Totale	Si
65.2	SLE RA 28	0	108.7	10000	250	Totale	Si
61.6	SLE RA 2	0	108.7	10000	350	Variabile	Si
61.6	SLE RA 31	0	108.7	10000	350	Variabile	Si
61.6	SLE RA 30	0	108.7	10000	350	Variabile	Si
61.6	SLE RA 29	0	108.7	10000	350	Variabile	Si
61.6	SLE RA 28	0	108.7	10000	350	Variabile	Si

Frecce lungo Y

Ascissa freccia	Combinazione	Freccia	Luce	L/f	L/f,min	Tipo	Verifica
47.1	SLE RA 1	-0.002	108.7	10000	250	Totale	Si
72.4	SLE RA 31	0.004	108.7	10000	250	Totale	Si
43.5	SLE RA 30	-0.002	108.7	10000	250	Totale	Si
72.4	SLE RA 29	0.004	108.7	10000	250	Totale	Si
47.1	SLE RA 28	-0.002	108.7	10000	250	Totale	Si
61.6	SLE RA 2	0.008	108.7	10000	350	Variabile	Si
61.6	SLE RA 31	0.006	108.7	10000	350	Variabile	Si
61.6	SLE RA 30	0	108.7	10000	350	Variabile	Si
61.6	SLE RA 29	0.006	108.7	10000	350	Variabile	Si
61.6	SLE RA 28	0	108.7	10000	350	Variabile	Si

Superelemento in acciaio composto dall'asta 108

Caratteristiche del materiale

Acciaio: S275, fyk = 2750

Caratteristiche geometriche

Lunghezza: 74.7
Nodo iniziale: 53 Nodo finale: 83
Cerniera iniziale: No Cerniera finale: No
Sovraresistenza: 0% Sisma Z: No

Caratteristiche della sezione

Sezione	Rotazione	Area	Jx	Jy	ix	iy	Wx	Wy	Wplx	Wply
HEA240	0	76.92	7771.3	2768.96	10.05	6	675.77	230.75	745.47	351.79

Verifiche di resistenza

Verifiche a forza assiale §4.2.4.1.2.1 - §4.2.4.1.2.2 NTC18

X	Comb.	Sfruttamento	Classe	NEd	Nc,Rd	Nt,Rd	Riduzione da taglio	ρx	ρy	Verifica
0	SLU 118	0.252	1	-50683.3	201468.8		1	0	0	Si

Verifiche a forza assiale SLD §4.2.4.1.2.1 - §4.2.4.1.2.2 NTC18

X	Comb.	Sfruttamento	Classe	NEd	Nc,Rd	Nt,Rd	Riduzione da taglio	ρx	ρy	Verifica
0	SLD 13	0.061	1	-12234.4	201468.8		1	0	0	Si

Verifica a taglio X §4.2.4.1.2.4 NTC18

X	Comb.	Sfruttamento	VEd	Vc,Rd	Av	Interazione taglio-torsione	Riduzione torsione	Verifica
42.3	SLV 5	0.006	-462.3	80830.6	61.47	Considerata	0.87	Si

Verifica a taglio X SLD §4.2.4.1.2.4 NTC18

X	Comb.	Sfruttamento	VEd	Vc,Rd	Av	Interazione taglio-torsione	Riduzione torsione	Verifica
0	SLD 5	0.002	-175.4	88551.8	61.47	Considerata	0.95	Si

Verifica a taglio Y §4.2.4.1.2.4 NTC18

X	Comb.	Sfruttamento	VEd	Vc,Rd	Av	Interazione taglio-torsione	Riduzione torsione	Verifica
74.7	SLU 69	0.059	-2265.1	38202.6	25.26	Considerata	1	Si

Verifica a taglio Y SLD §4.2.4.1.2.4 NTC18

X	Comb.	Sfruttamento	VEd	Vc,Rd	Av	Interazione taglio-torsione	Riduzione torsione	Verifica
0	SLD 5	0.047	1728.1	36392.6	25.26	Considerata	0.95	Si

Verifica a torsione §4.2.4.1.2.5 NTC18

X	Comb.	Sfruttamento torsione	TEd	TRd	Riduzione taglio resistente	Sfruttamento taglio-torsione	τEd,totale	τRd	Verifica
74.7	SLV 10	0.305	11733	38489.3	Considerata				Si

Verifica a torsione SLD §4.2.4.1.2.5 NTC18

X	Comb.	Sfruttamento torsione	TEd	TRd	Riduzione taglio resistente	Sfruttamento taglio-torsione	τEd,totale	τRd	Verifica
74.7	SLD 10	0.116	4451	38489.3	Considerata				Si

Verifica a presso/tenso flessione retta X §§ 4.2.4.1.2.3 - 4.2.4.1.2.6 - 4.2.4.1.2.7 - 4.2.4.1.2.8 NTC18

Verifiche eseguite utilizzando la formula conservativa (6.2) §6.2.1 EN 1993-1-1:2005.

X	Comb.	Sfruttamento	Classe	NEd	NRd	Rid. NRd da VEd	Mx,Ed	Mx,Rd	Rid. Mx,Rd da VEd	Rid. Mx,Rd da NEd	ρx	ρy	Verifica
0	SLU 85	0.424	1	-50683.3	201468.8	1	337222	1952423	1		0	0	Si

Verifica a presso/tenso flessione retta X SLD §§ 4.2.4.1.2.3 - 4.2.4.1.2.6 - 4.2.4.1.2.7 - 4.2.4.1.2.8 NTC18

Verifiche eseguite utilizzando la formula conservativa (6.2) §6.2.1 EN 1993-1-1:2005.

X	Comb.	Sfruttamento	Classe	NEd	NRd	Rid. NRd da VEd	Mx,Ed	Mx,Rd	Rid. Mx,Rd da VEd	Rid. Mx,Rd da NEd	ρx	ρy	Verifica
72.2	SLD 3	0.073	1	-8934.3	201468.8	1	56815	1952423	1		0	0	Si

Verifica a presso/tenso flessione deviata §§ 4.2.4.1.2.3 - 4.2.4.1.2.6 - 4.2.4.1.2.7 - 4.2.4.1.2.8 NTC18

Verifiche eseguite utilizzando la formula conservativa (6.2) §6.2.1 EN 1993-1-1:2005.

X	Comb.	Sfruttamento	Classe	NEd	NRd	Rid. NRd da VEd	Mx,Ed	Mx,Rd	My,Ed	My,Rd	Rid. Mx,Rd da VEd	Rid. Mx,Rd da NEd	Rid. My,Rd da VEd	Rid. My,Rd da NEd	α	β	ρx	ρy	Verifica
0	SLV 6	0.127	1	-11838.8	201468.8	1	66301	1952423	31397	921364	1		1				0	0	Si

Verifica a presso/tenso flessione deviata SLD §§ 4.2.4.1.2.3 - 4.2.4.1.2.6 - 4.2.4.1.2.7 - 4.2.4.1.2.8 NTC18

Verifiche eseguite utilizzando la formula conservativa (6.2) §6.2.1 EN 1993-1-1:2005.

X	Comb.	Sfruttamento	Classe	NEd	NRd	Rid. NRd da VEd	Mx,Ed	Mx,Rd	My,Ed	My,Rd	Rid. Mx,Rd da VEd	Rid. Mx,Rd da NEd	Rid. My,Rd da VEd	Rid. My,Rd da NEd	α	β	ρx	ρy	Verifica
0	SLD 6	0.104	1	-11922	201468.8	1	62382	1952423	11905	921364	1		1				0	0	Si

Verifiche ad instabilità

Caratteristiche iniziali

Membratura principale per controllo snellezza; Calcolo di snellezze ed N critici condotti secondo gli assi principali;
Curva X: b; Curva Y: c; Svergolamento: Carico all'estradosso; Curva svergolamento: b;

Dati per instabilità attorno a x

Numero rit.	Presente	Ascissa	Campata	βx/m	Vincolo a entrambi estremi	λx/m	λVer
1	Si	0					
			1-2	1	Si	7.4	Si, (<200)
2	Si	74.7					

Dati per instabilità attorno a y

Numero rit.	Presente	Ascissa	Campata	βy/n	k,LT	kw,LT	Vincolo a entrambi estremi	λy/n	λVer
1	Si	0							
			1-2	1	1	1	Si	12.5	Si, (<200)
2	Si	74.7							

Verifica di stabilità per pressoflessione §C.4.2.4.1.3.3.2 NTC18

X	Comb.	Sfruttamento	Classe	NEd	NRk	Mx,Ed max	Mx,Rk	My,Ed max	My,Rk	χ,x	χ,y	kxx	kxy	kyx	kyy	χ,LT	Verifica
0	SLU 85	0.407	1	-50683.3	211542.2	348939.9	2050044	53.8	967432.2	1	1	0.871	0.436	0.743	0.727	1	Si

Verifica di stabilità per pressoflessione SLD §C.4.2.4.1.3.3.2 NTC18

X	Comb.	Sfruttamento	Classe	NEd	NRk	Mx,Ed max	Mx,Rk	My,Ed max	My,Rk	χ,x	χ,y	kxx	kxy	kyx	kyy	χ,LT	Verifica
0	SLD 7	0.09	1	-11922	211542.2	62386.9	2050044	11899.5	967432.2	1	1	0.556	0.33	0.743	0.55	1	Si

Verifica di stabilità a taglio anima Y §4.2.4.1.2.4 [4.2.27] NTC18

η	hw	tw	hw/tw max	Verifica
1.2	20.6	0.8	55.46	Si

Verifica di stabilità a taglio anima Y SLD §4.2.4.1.2.4 [4.2.27] NTC18

η	hw	tw	hw/tw max	Verifica
1.2	20.6	0.8	55.46	Si

Verifiche a deformabilità

Mensola X: No; Mensola Y: No.

Frecce lungo X

Ascissa freccia	Combinazione	Freccia	Luce	L/f	L/f,min	Tipo	Verifica
44.8	SLE RA 1	0	74.7	10000	250	Totale	Si
37.4	SLE RA 31	0	74.7	10000	250	Totale	Si
47.3	SLE RA 30	0	74.7	10000	250	Totale	Si
37.4	SLE RA 29	0	74.7	10000	250	Totale	Si
47.3	SLE RA 28	0	74.7	10000	250	Totale	Si
32.4	SLE RA 2	0	74.7	10000	350	Variabile	Si
34.9	SLE RA 31	0	74.7	10000	350	Variabile	Si
52.3	SLE RA 30	0	74.7	10000	350	Variabile	Si
34.9	SLE RA 29	0	74.7	10000	350	Variabile	Si
52.3	SLE RA 28	0	74.7	10000	350	Variabile	Si

Frecce lungo Y

Ascissa freccia	Combinazione	Freccia	Luce	L/f	L/f,min	Tipo	Verifica
37.4	SLE RA 1	-0.001	74.7	10000	250	Totale	Si
37.4	SLE RA 31	0.005	74.7	10000	250	Totale	Si
37.4	SLE RA 30	-0.001	74.7	10000	250	Totale	Si
37.4	SLE RA 29	0.005	74.7	10000	250	Totale	Si
37.4	SLE RA 28	-0.001	74.7	10000	250	Totale	Si
37.4	SLE RA 19	0.008	74.7	9666.1	350	Variabile	Si
37.4	SLE RA 18	0.008	74.7	9715.6	350	Variabile	Si
37.4	SLE RA 7	0.008	74.7	9739.8	350	Variabile	Si
37.4	SLE RA 6	0.008	74.7	9790.1	350	Variabile	Si
37.4	SLE RA 15	0.008	74.7	9840	350	Variabile	Si

Superelemento in acciaio composto dall'asta 109

Caratteristiche del materiale

Acciaio: S275, fyk = 2750

Caratteristiche geometriche

Lunghezza: 74.7
Nodo iniziale: 56 Nodo finale: 84
Cerniera iniziale: No Cerniera finale: No
Sovraresistenza: 0% Sisma Z: No

Caratteristiche della sezione

Sezione	Rotazione	Area	Jx	Jy	ix	iy	Wx	Wy	Wplx	Wply
HEA240	0	76.92	7771.3	2768.96	10.05	6	675.77	230.75	745.47	351.79

Verifiche di resistenza

Verifiche a forza assiale §4.2.4.1.2.1 - §4.2.4.1.2.2 NTC18

X	Comb.	Sfruttamento	Classe	NEd	Nc,Rd	Nt,Rd	Riduzione da taglio	ρx	ρy	Verifica
0	SLU 85	0.252	1	-50676.3	201468.8		1	0	0	Si

Verifiche a forza assiale SLD §4.2.4.1.2.1 - §4.2.4.1.2.2 NTC18

X	Comb.	Sfruttamento	Classe	NEd	Nc,Rd	Nt,Rd	Riduzione da taglio	ρx	ρy	Verifica
0	SLD 1	0.061	1	-12234.4	201468.8		1	0	0	Si

Verifica a taglio X §4.2.4.1.2.4 NTC18

X	Comb.	Sfruttamento	VEd	Vc,Rd	Av	Interazione taglio-torsione	Riduzione torsione	Verifica
39.8	SLV 9	0.006	462.3	80830.6	61.47	Considerata	0.87	Si

Verifica a taglio X SLD §4.2.4.1.2.4 NTC18

X	Comb.	Sfruttamento	VEd	Vc,Rd	Av	Interazione taglio-torsione	Riduzione torsione	Verifica
0	SLD 9	0.002	175.4	88551.8	61.47	Considerata	0.95	Si

Verifica a taglio Y §4.2.4.1.2.4 NTC18

X	Comb.	Sfruttamento	VEd	Vc,Rd	Av	Interazione taglio-torsione	Riduzione torsione	Verifica
74.7	SLU 102	0.059	-2265.1	38202.6	25.26	Considerata	1	Si

Verifica a taglio Y SLD §4.2.4.1.2.4 NTC18

X	Comb.	Sfruttamento	VEd	Vc,Rd	Av	Interazione taglio-torsione	Riduzione torsione	Verifica
0	SLD 9	0.047	1728.1	36392.6	25.26	Considerata	0.95	Si

Verifica a torsione §4.2.4.1.2.5 NTC18

X	Comb.	Sfruttamento torsione	TEd	TRd	Riduzione taglio resistente	Sfruttamento taglio-torsione	τEd,totale	τRd	Verifica
39.8	SLV 5	0.305	-11733	38489.3	Considerata				Si

Verifica a torsione SLD §4.2.4.1.2.5 NTC18

X	Comb.	Sfruttamento torsione	TEd	TRd	Riduzione taglio resistente	Sfruttamento taglio-torsione	τEd,totale	τRd	Verifica
39.8	SLD 5	0.116	-4451	38489.3	Considerata				Si

Verifica a presso/tenso flessione retta X §§ 4.2.4.1.2.3 - 4.2.4.1.2.6 - 4.2.4.1.2.7 - 4.2.4.1.2.8 NTC18

Verifiche eseguite utilizzando la formula conservativa (6.2) §6.2.1 EN 1993-1-1:2005.

X	Comb.	Sfruttamento	Classe	NEd	NRd	Rid. NRd da VEd	Mx,Ed	Mx,Rd	Rid. Mx,Rd da VEd	Rid. Mx,Rd da NEd	ρx	ρy	Verifica
0	SLU 118	0.424	1	-50676.3	201468.8	1	337204	1952423	1		0	0	Si

Verifica a presso/tenso flessione retta X SLD §§ 4.2.4.1.2.3 - 4.2.4.1.2.6 - 4.2.4.1.2.7 - 4.2.4.1.2.8 NTC18

Verifiche eseguite utilizzando la formula conservativa (6.2) §6.2.1 EN 1993-1-1:2005.

X	Comb.	Sfruttamento	Classe	NEd	NRd	Rid. NRd da VEd	Mx,Ed	Mx,Rd	Rid. Mx,Rd da VEd	Rid. Mx,Rd da NEd	ρx	ρy	Verifica
72.2	SLD 16	0.073	1	-8934.3	201468.8	1	56815	1952423	1		0	0	Si

Verifica a presso/tenso flessione deviata §§ 4.2.4.1.2.3 - 4.2.4.1.2.6 - 4.2.4.1.2.7 - 4.2.4.1.2.8 NTC18

Verifiche eseguite utilizzando la formula conservativa (6.2) §6.2.1 EN 1993-1-1:2005.

X	Comb.	Sfruttamento	Classe	NEd	NRd	Rid. NRd da VEd	Mx,Ed	Mx,Rd	My,Ed	My,Rd	Rid. Mx,Rd da VEd	Rid. Mx,Rd da NEd	Rid. My,Rd da VEd	Rid. My,Rd da NEd	α	β	ρx	ρy	Verifica
0	SLV 10	0.127	1	-11838.8	201468.8	1	66301	1952423	-31397	921364	1		1				0	0	Si

Verifica a presso/tenso flessione deviata SLD §§ 4.2.4.1.2.3 - 4.2.4.1.2.6 - 4.2.4.1.2.7 - 4.2.4.1.2.8 NTC18

Verifiche eseguite utilizzando la formula conservativa (6.2) §6.2.1 EN 1993-1-1:2005.

X	Comb.	Sfruttamento	Classe	NEd	NRd	Rid. NRd da VEd	Mx,Ed	Mx,Rd	My,Ed	My,Rd	Rid. Mx,Rd da VEd	Rid. Mx,Rd da NEd	Rid. My,Rd da VEd	Rid. My,Rd da NEd	α	β	ρx	ρy	Verifica
0	SLD 10	0.104	1	-11922	201468.8	1	62382	1952423	-11905	921364	1		1				0	0	Si

Verifiche ad instabilità

Caratteristiche iniziali

Membratura principale per controllo snellezza; Calcolo di snellezze ed N critici condotti secondo gli assi principali;
Curva X: b; Curva Y: c; Svergolamento: Carico all'estradosso; Curva svergolamento: b;

Dati per instabilità attorno a x

Numero rit.	Presente	Ascissa	Campata	βx/m	Vincolo a entrambi estremi	λx/m	λVer
1	Si	0					
			1-2	1	Si	7.4	Si, (<200)
2	Si	74.7					

Dati per instabilità attorno a y

Numero rit.	Presente	Ascissa	Campata	βy/n	k,LT	kw,LT	Vincolo a entrambi estremi	λy/n	λVer
1	Si	0							
			1-2	1	1	1	Si	12.5	Si, (<200)
2	Si	74.7							

Verifica di stabilità per pressoflessione §C.4.2.4.1.3.3.2 NTC18

X	Comb.	Sfruttamento	Classe	NEd	NRk	Mx,Ed max	Mx,Rk	My,Ed max	My,Rk	χ,x	χ,y	kxx	kxy	kyx	kyy	χ,LT	Verifica
0	SLU 118	0.407	1	-50676.3	211542.2	348850.7	2050044	53.8	967432.2	1	1	0.871	0.437	0.743	0.728	1	Si

Verifica di stabilità per pressoflessione SLD §C.4.2.4.1.3.3.2 NTC18

X	Comb.	Sfruttamento	Classe	NEd	NRk	Mx,Ed max	Mx,Rk	My,Ed max	My,Rk	χ,x	χ,y	kxx	kxy	kyx	kyy	χ,LT	Verifica
0	SLD 11	0.09	1	-11922	211542.2	62386.9	2050044	11899.5	967432.2	1	1	0.556	0.33	0.743	0.55	1	Si

Verifica di stabilità a taglio anima Y §4.2.4.1.2.4 [4.2.27] NTC18

η	hw	tw	hw/tw max	Verifica
1.2	20.6	0.8	55.46	Si

Verifica di stabilità a taglio anima Y SLD §4.2.4.1.2.4 [4.2.27] NTC18

η	hw	tw	hw/tw max	Verifica
1.2	20.6	0.8	55.46	Si

Verifiche a deformabilità

Mensola X: No; Mensola Y: No.

Frecce lungo X

Ascissa freccia	Combinazione	Freccia	Luce	L/f	L/f,min	Tipo	Verifica
44.8	SLE RA 1	0	74.7	10000	250	Totale	Si
37.4	SLE RA 31	0	74.7	10000	250	Totale	Si
47.3	SLE RA 30	0	74.7	10000	250	Totale	Si
37.4	SLE RA 29	0	74.7	10000	250	Totale	Si
47.3	SLE RA 28	0	74.7	10000	250	Totale	Si
32.4	SLE RA 2	0	74.7	10000	350	Variabile	Si
34.9	SLE RA 31	0	74.7	10000	350	Variabile	Si
52.3	SLE RA 30	0	74.7	10000	350	Variabile	Si
34.9	SLE RA 29	0	74.7	10000	350	Variabile	Si
52.3	SLE RA 28	0	74.7	10000	350	Variabile	Si

Frecce lungo Y

Ascissa freccia	Combinazione	Freccia	Luce	L/f	L/f,min	Tipo	Verifica
37.4	SLE RA 1	-0.001	74.7	10000	250	Totale	Si
37.4	SLE RA 31	0.005	74.7	10000	250	Totale	Si
37.4	SLE RA 30	-0.001	74.7	10000	250	Totale	Si
37.4	SLE RA 29	0.005	74.7	10000	250	Totale	Si
37.4	SLE RA 28	-0.001	74.7	10000	250	Totale	Si
37.4	SLE RA 19	0.008	74.7	9668	350	Variabile	Si
37.4	SLE RA 18	0.008	74.7	9717.5	350	Variabile	Si
37.4	SLE RA 7	0.008	74.7	9740.5	350	Variabile	Si
37.4	SLE RA 6	0.008	74.7	9790.8	350	Variabile	Si
37.4	SLE RA 15	0.008	74.7	9841.3	350	Variabile	Si

Superelemento in acciaio composto dall'asta 110

Caratteristiche del materiale

Acciaio: S275, fyk = 2750

Caratteristiche geometriche

Lunghezza: 78.5
Nodo iniziale: 83 Nodo finale: 105
Cerniera iniziale: No Cerniera finale: No

Sovraresistenza: 0% Sisma Z: No

Caratteristiche della sezione

Sezione	Rotazione	Area	Jx	Jy	ix	iy	Wx	Wy	Wplx	Wply
HEA240	0	76.92	7771.3	2768.96	10.05	6	675.77	230.75	745.47	351.79

Verifiche di resistenza

Verifiche a forza assiale §4.2.4.1.2.1 - §4.2.4.1.2.2 NTC18

X	Comb.	Sfruttamento	Classe	NEd	Nc,Rd	Nt,Rd	Riduzione da taglio	ρx	ρy	Verifica
0	SLU 85	0.228	1	-46011.6	201468.8		1	0	0	Si

Verifiche a forza assiale SLD §4.2.4.1.2.1 - §4.2.4.1.2.2 NTC18

X	Comb.	Sfruttamento	Classe	NEd	Nc,Rd	Nt,Rd	Riduzione da taglio	ρx	ρy	Verifica
0	SLD 13	0.046	1	-9310.2	201468.8		1	0	0	Si

Verifica a taglio X §4.2.4.1.2.4 NTC18

X	Comb.	Sfruttamento	VEd	Vc,Rd	Av	Interazione taglio-torsione	Riduzione torsione	Verifica
36.6	SLV 12	0.004	343.5	83209.9	61.47	Considerata	0.9	Si

Verifica a taglio X SLD §4.2.4.1.2.4 NTC18

X	Comb.	Sfruttamento	VEd	Vc,Rd	Av	Interazione taglio-torsione	Riduzione torsione	Verifica
78.5	SLD 12	0.001	130.3	89385.7	61.47	Considerata	0.96	Si

Verifica a taglio Y §4.2.4.1.2.4 NTC18

X	Comb.	Sfruttamento	VEd	Vc,Rd	Av	Interazione taglio-torsione	Riduzione torsione	Verifica
0	SLU 118	0.256	9773.4	38202.6	25.26	Considerata	1	Si

Verifica a taglio Y SLD §4.2.4.1.2.4 NTC18

X	Comb.	Sfruttamento	VEd	Vc,Rd	Av	Interazione taglio-torsione	Riduzione torsione	Verifica
0	SLD 3	0.053	1989.7	37768.2	25.26	Considerata	0.99	Si

Verifica a torsione §4.2.4.1.2.5 NTC18

X	Comb.	Sfruttamento torsione	TEd	TRd	Riduzione taglio resistente	Sfruttamento taglio-torsione	τEd,totale	τRd	Verifica
36.6	SLV 12	0.248	-9559.7	38489.3	Considerata				Si

Verifica a torsione SLD §4.2.4.1.2.5 NTC18

X	Comb.	Sfruttamento torsione	TEd	TRd	Riduzione taglio resistente	Sfruttamento taglio-torsione	τEd,totale	τRd	Verifica
36.6	SLD 12	0.094	-3624.8	38489.3	Considerata				Si

Verifica a presso/tenso flessione retta X §§ 4.2.4.1.2.3 - 4.2.4.1.2.6 - 4.2.4.1.2.7 - 4.2.4.1.2.8 NTC18

Verifiche eseguite utilizzando la formula conservativa (6.2) §6.2.1 EN 1993-1-1:2005.

X	Comb.	Sfruttamento	Classe	NEd	NRd	Rid. NRd da VEd	Mx,Ed	Mx,Rd	Rid. Mx,Rd da VEd	Rid. Mx,Rd da NEd	ρx	ρy	Verifica
0	SLU 118	0.407	1	-46011.6	201468.8	1	348845	1952423	1		0	0	Si

Verifica a presso/tenso flessione retta Y §§ 4.2.4.1.2.3 - 4.2.4.1.2.6 - 4.2.4.1.2.7 - 4.2.4.1.2.8 NTC18

Verifiche eseguite utilizzando la formula conservativa (6.2) §6.2.1 EN 1993-1-1:2005.

X	Comb.	Sfruttamento	Classe	NEd	NRd	Rid. NRd da VEd	My,Ed	My,Rd	Rid. My,Rd da VEd	Rid. My,Rd da NEd	ρx	ρy	Verifica
34	SLV 9	0.064	1	-8741.3	201468.8	1	-19242	921364	1		0	0	Si

Verifica a presso/tenso flessione retta Y SLD §§ 4.2.4.1.2.3 - 4.2.4.1.2.6 - 4.2.4.1.2.7 - 4.2.4.1.2.8 NTC18

Verifiche eseguite utilizzando la formula conservativa (6.2) §6.2.1 EN 1993-1-1:2005.

X	Comb.	Sfruttamento	Classe	NEd	NRd	Rid. NRd da VEd	My,Ed	My,Rd	Rid. My,Rd da VEd	Rid. My,Rd da NEd	ρx	ρy	Verifica
36.6	SLD 9	0.051	1	-8531.3	201468.8	1	-7640	921364	1		0	0	Si

Verifica a presso/tenso flessione deviata §§ 4.2.4.1.2.3 - 4.2.4.1.2.6 - 4.2.4.1.2.7 - 4.2.4.1.2.8 NTC18

Verifiche eseguite utilizzando la formula conservativa (6.2) §6.2.1 EN 1993-1-1:2005.

X	Comb.	Sfruttamento	Classe	NEd	NRd	Rid. NRd da VEd	Mx,Ed	Mx,Rd	My,Ed	My,Rd	Rid. Mx,Rd da VEd	Rid. Mx,Rd da NEd	Rid. My,Rd da VEd	Rid. My,Rd da NEd	α	β	ρx	ρy	Verifica
78.5	SLV 12	0.085	1	-8237.7	201468.8	1	-12131	1952423	34500	921364	1		1				0	0	Si

Verifica a presso/tenso flessione deviata SLD §§ 4.2.4.1.2.3 - 4.2.4.1.2.6 - 4.2.4.1.2.7 - 4.2.4.1.2.8 NTC18

Verifiche eseguite utilizzando la formula conservativa (6.2) §6.2.1 EN 1993-1-1:2005.

X	Comb.	Sfruttamento	Classe	NEd	NRd	Rid. NRd da VEd	Mx,Ed	Mx,Rd	My,Ed	My,Rd	Rid. Mx,Rd da VEd	Rid. Mx,Rd da NEd	Rid. My,Rd da VEd	Rid. My,Rd da NEd	α	β	ρx	ρy	Verifica
0	SLD 6	0.074	1	-8633.7	201468.8	1	54201	1952423	-2880	921364	1		1				0	0	Si

Verifiche ad instabilità

Caratteristiche iniziali

Membratura principale per controllo snellezza; Calcolo di snellezze ed N critici condotti secondo gli assi principali;
Curva X: b; Curva Y: c; Svergolamento: Carico all'estradosso; Curva svergolamento: b;

Dati per instabilità attorno a x

Numero rit.	Presente	Ascissa	Campata	βx/m	Vincolo a entrambi estremi	λx/m	λVer
1	Si	0					
			1-2	1	Si	7.8	Si, (<200)
2	Si	78.5					

Dati per instabilità attorno a y

Numero rit.	Presente	Ascissa	Campata	βy/n	k,LT	kw,LT	Vincolo a entrambi estremi	λy/n	λVer
1	Si	0							
			1-2	1	1	1	Si	13.1	Si, (<200)
2	Si	78.5							

Verifica di stabilità per pressoflessione §C.4.2.4.1.3.3.2 NTC18

X	Comb.	Sfruttamento	Classe	NEd	NRk	Mx,Ed max	Mx,Rk	My,Ed max	My,Rk	χ,x	χ,y	kxx	kxy	kyx	kyy	χ,LT	Verifica
0	SLU 85	0.363	1	-46011.6	211542.2	348844.8	2050044	26.3	967432.2	1	1	0.39	0.316	0.751	0.526	1	Si

Verifica di stabilità per pressoflessione SLD §C.4.2.4.1.3.3.2 NTC18

X	Comb.	Sfruttamento	Classe	NEd	NRk	Mx,Ed max	Mx,Rk	My,Ed max	My,Rk	χ,x	χ,y	kxx	kxy	kyx	kyy	χ,LT	Verifica
0	SLD 5	0.073	1	-8633.7	211542.2	54201.4	2050044	13080.3	967432.2	1	1	0.398	0.408	0.751	0.679	1	Si

Verifica di stabilità a taglio anima Y §4.2.4.1.2.4 [4.2.27] NTC18

η	hw	tw	hw/tw max	Verifica
1.2	20.6	0.8	55.46	Si

Verifica di stabilità a taglio anima Y SLD §4.2.4.1.2.4 [4.2.27] NTC18

η	hw	tw	hw/tw max	Verifica
1.2	20.6	0.8	55.46	Si

Verifiche a deformabilità

Mensola X: No; Mensola Y: No.

Frecce lungo X

Ascissa freccia	Combinazione	Freccia	Luce	L/f	L/f,min	Tipo	Verifica
34	SLE RA 1	0	78.5	10000	250	Totale	Si
31.4	SLE RA 31	0	78.5	10000	250	Totale	Si
31.4	SLE RA 30	0	78.5	10000	250	Totale	Si
31.4	SLE RA 29	0	78.5	10000	250	Totale	Si
31.4	SLE RA 28	0	78.5	10000	250	Totale	Si
31.4	SLE RA 2	0	78.5	10000	350	Variabile	Si
28.8	SLE RA 31	0	78.5	10000	350	Variabile	Si
28.8	SLE RA 30	0	78.5	10000	350	Variabile	Si
28.8	SLE RA 29	0	78.5	10000	350	Variabile	Si
28.8	SLE RA 28	0	78.5	10000	350	Variabile	Si

Frecce lungo Y

Ascissa freccia	Combinazione	Freccia	Luce	L/f	L/f,min	Tipo	Verifica
44.5	SLE RA 1	-0.002	78.5	10000	250	Totale	Si
54.9	SLE RA 31	-0.002	78.5	10000	250	Totale	Si
44.5	SLE RA 30	-0.002	78.5	10000	250	Totale	Si
54.9	SLE RA 29	-0.002	78.5	10000	250	Totale	Si
44.5	SLE RA 28	-0.002	78.5	10000	250	Totale	Si
60.2	SLE RA 2	-0.001	78.5	10000	350	Variabile	Si
60.2	SLE RA 31	-0.001	78.5	10000	350	Variabile	Si
54.9	SLE RA 30	0	78.5	10000	350	Variabile	Si
60.2	SLE RA 29	-0.001	78.5	10000	350	Variabile	Si
54.9	SLE RA 28	0	78.5	10000	350	Variabile	Si

Superelemento in acciaio composto dall'asta 111

Caratteristiche del materiale

Acciaio: S275, fyk = 2750

Caratteristiche geometriche

Lunghezza: 78.5
Nodo iniziale: 84 Nodo finale: 106
Cerniera iniziale: No Cerniera finale: No
Sovraresistenza: 0% Sisma Z: No

Caratteristiche della sezione

Sezione	Rotazione	Area	Jx	Jy	ix	iy	Wx	Wy	Wplx	Wply
HEA240	0	76.92	7771.3	2768.96	10.05	6	675.77	230.75	745.47	351.79

Verifiche di resistenza

Verifiche a forza assiale §4.2.4.1.2.1 - §4.2.4.1.2.2 NTC18

X	Comb.	Sfruttamento	Classe	NEd	Nc,Rd	Nt,Rd	Riduzione da taglio	ρx	ρy	Verifica
0	SLU 85	0.228	1	-46005.8	201468.8		1	0	0	Si

Verifiche a forza assiale SLD §4.2.4.1.2.1 - §4.2.4.1.2.2 NTC18

X	Comb.	Sfruttamento	Classe	NEd	Nc,Rd	Nt,Rd	Riduzione da taglio	ρx	ρy	Verifica
0	SLD 1	0.046	1	-9310.2	201468.8		1	0	0	Si

Verifica a taglio X §4.2.4.1.2.4 NTC18

X	Comb.	Sfruttamento	VEd	Vc,Rd	Av	Interazione taglio-torsione	Riduzione torsione	Verifica
78.5	SLV 8	0.004	-343.5	83209.9	61.47	Considerata	0.9	Si

Verifica a taglio X SLD §4.2.4.1.2.4 NTC18

X	Comb.	Sfruttamento	VEd	Vc,Rd	Av	Interazione taglio-torsione	Riduzione torsione	Verifica
78.5	SLD 8	0.001	-130.3	89385.7	61.47	Considerata	0.96	Si

Verifica a taglio Y §4.2.4.1.2.4 NTC18

X	Comb.	Sfruttamento	VEd	Vc,Rd	Av	Interazione taglio-torsione	Riduzione torsione	Verifica
0	SLU 118	0.256	9770.2	38202.6	25.26	Considerata	1	Si

Verifica a taglio Y SLD §4.2.4.1.2.4 NTC18

X	Comb.	Sfruttamento	VEd	Vc,Rd	Av	Interazione taglio-torsione	Riduzione torsione	Verifica
0	SLD 16	0.053	1989.7	37768.2	25.26	Considerata	0.99	Si

Verifica a torsione §4.2.4.1.2.5 NTC18

X	Comb.	Sfruttamento torsione	TEd	TRd	Riduzione taglio resistente	Sfruttamento taglio-torsione	τEd,totale	τRd	Verifica
78.5	SLV 8	0.248	9559.7	38489.3	Considerata				Si

Verifica a torsione SLD §4.2.4.1.2.5 NTC18

X	Comb.	Sfruttamento torsione	TEd	TRd	Riduzione taglio resistente	Sfruttamento taglio-torsione	τEd,totale	τRd	Verifica
78.5	SLD 8	0.094	3624.8	38489.3	Considerata				Si

Verifica a presso/tenso flessione retta X §§ 4.2.4.1.2.3 - 4.2.4.1.2.6 - 4.2.4.1.2.7 - 4.2.4.1.2.8 NTC18

Verifiche eseguite utilizzando la formula conservativa (6.2) §6.2.1 EN 1993-1-1:2005.

X	Comb.	Sfruttamento	Classe	NEd	NRd	Rid. NRd da VEd	Mx,Ed	Mx,Rd	Rid. Mx,Rd da VEd	Rid. Mx,Rd da NEd	ρx	ρy	Verifica
0	SLU 118	0.407	1	-46005.8	201468.8	1	348756	1952423	1		0	0	Si

Verifica a presso/tenso flessione retta Y §§ 4.2.4.1.2.3 - 4.2.4.1.2.6 - 4.2.4.1.2.7 - 4.2.4.1.2.8 NTC18

Verifiche eseguite utilizzando la formula conservativa (6.2) §6.2.1 EN 1993-1-1:2005.

X	Comb.	Sfruttamento	Classe	NEd	NRd	Rid. NRd da VEd	My,Ed	My,Rd	Rid. My,Rd da VEd	Rid. My,Rd da NEd	ρx	ρy	Verifica
34	SLV 5	0.064	1	-8741.3	201468.8	1	19242	921364	1		0	0	Si

Verifica a presso/tenso flessione retta Y SLD §§ 4.2.4.1.2.3 - 4.2.4.1.2.6 - 4.2.4.1.2.7 - 4.2.4.1.2.8 NTC18

Verifiche eseguite utilizzando la formula conservativa (6.2) §6.2.1 EN 1993-1-1:2005.

X	Comb.	Sfruttamento	Classe	NEd	NRd	Rid. NRd da VEd	My,Ed	My,Rd	Rid. My,Rd da VEd	Rid. My,Rd da NEd	ρx	ρy	Verifica
36.6	SLD 5	0.051	1	-8531.3	201468.8	1	7640	921364	1		0	0	Si

Verifica a presso/tenso flessione deviata §§ 4.2.4.1.2.3 - 4.2.4.1.2.6 - 4.2.4.1.2.7 - 4.2.4.1.2.8 NTC18

Verifiche eseguite utilizzando la formula conservativa (6.2) §6.2.1 EN 1993-1-1:2005.

X	Comb.	Sfruttamento	Classe	NEd	NRd	Rid. NRd da VEd	Mx,Ed	Mx,Rd	My,Ed	My,Rd	Rid. Mx,Rd da VEd	Rid. Mx,Rd da NEd	Rid. My,Rd da VEd	Rid. My,Rd da NEd	α	β	ρx	ρy	Verifica
78.5	SLV 8	0.085	1	-8237.7	201468.8	1	-12131	1952423	-34500	921364	1		1				0	0	Si

Verifica a presso/tenso flessione deviata SLD §§ 4.2.4.1.2.3 - 4.2.4.1.2.6 - 4.2.4.1.2.7 - 4.2.4.1.2.8 NTC18

Verifiche eseguite utilizzando la formula conservativa (6.2) §6.2.1 EN 1993-1-1:2005.

X	Comb.	Sfruttamento	Classe	NEd	NRd	Rid. NRd da VEd	Mx,Ed	Mx,Rd	My,Ed	My,Rd	Rid. Mx,Rd da VEd	Rid. Mx,Rd da NEd	Rid. My,Rd da VEd	Rid. My,Rd da NEd	α	β	ρx	ρy	Verifica
0	SLD 9	0.074	1	-8633.7	201468.8	1	54201	1952423	2880	921364	1		1				0	0	Si

Verifiche ad instabilità

Caratteristiche iniziali

Membratura principale per controllo snellezza; Calcolo di snellezze ed N critici condotti secondo gli assi principali;
Curva X: b; Curva Y: c; Svergolamento: Carico all'estradosso; Curva svergolamento: b;

Dati per instabilità attorno a x

Numero rit.	Presente	Ascissa	Campata	βx/m	Vincolo a entrambi estremi	λx/m	λVer
1	Si	0					
			1-2	1	Si	7.8	Si, (<200)
2	Si	78.5					

Dati per instabilità attorno a y

Numero rit.	Presente	Ascissa	Campata	βy/n	k,LT	kw,LT	Vincolo a entrambi estremi	λy/n	λVer
1	Si	0							
			1-2	1	1	1	Si	13.1	Si, (<200)
2	Si	78.5							

Verifica di stabilità per pressoflessione §C.4.2.4.1.3.3.2 NTC18

X	Comb.	Sfruttamento	Classe	NEd	NRk	Mx,Ed max	Mx,Rk	My,Ed max	My,Rk	χ,x	χ,y	kxx	kxy	kyx	kyy	χ,LT	Verifica
0	SLU 85	0.362	1	-46005.8	211542.2	348755.8	2050044	26.3	967432.2	1	1	0.39	0.316	0.751	0.526	1	Si

Verifica di stabilità per pressoflessione SLD §C.4.2.4.1.3.3.2 NTC18

X	Comb.	Sfruttamento	Classe	NEd	NRk	Mx,Ed max	Mx,Rk	My,Ed max	My,Rk	χ,x	χ,y	kxx	kxy	kyx	kyy	χ,LT	Verifica
0	SLD 9	0.073	1	-8633.7	211542.2	54201.4	2050044	13080.3	967432.2	1	1	0.398	0.408	0.751	0.679	1	Si

Verifica di stabilità a taglio anima Y §4.2.4.1.2.4 [4.2.27] NTC18

η	hw	tw	hw/tw max	Verifica
1.2	20.6	0.8	55.46	Si

Verifica di stabilità a taglio anima Y SLD §4.2.4.1.2.4 [4.2.27] NTC18

η	hw	tw	hw/tw max	Verifica
1.2	20.6	0.8	55.46	Si

Verifiche a deformabilità

Mensola X: No; Mensola Y: No.

Frecce lungo X

Ascissa freccia	Combinazione	Freccia	Luce	L/f	L/f,min	Tipo	Verifica
34	SLE RA 1	0	78.5	10000	250	Totale	Si
31.4	SLE RA 31	0	78.5	10000	250	Totale	Si
31.4	SLE RA 30	0	78.5	10000	250	Totale	Si
31.4	SLE RA 29	0	78.5	10000	250	Totale	Si
31.4	SLE RA 28	0	78.5	10000	250	Totale	Si
31.4	SLE RA 2	0	78.5	10000	350	Variabile	Si
28.8	SLE RA 31	0	78.5	10000	350	Variabile	Si
28.8	SLE RA 30	0	78.5	10000	350	Variabile	Si
28.8	SLE RA 29	0	78.5	10000	350	Variabile	Si
28.8	SLE RA 28	0	78.5	10000	350	Variabile	Si

Frecce lungo Y

Ascissa freccia	Combinazione	Freccia	Luce	L/f	L/f,min	Tipo	Verifica
44.5	SLE RA 1	-0.002	78.5	10000	250	Totale	Si
54.9	SLE RA 31	-0.002	78.5	10000	250	Totale	Si
44.5	SLE RA 30	-0.002	78.5	10000	250	Totale	Si
54.9	SLE RA 29	-0.002	78.5	10000	250	Totale	Si
44.5	SLE RA 28	-0.002	78.5	10000	250	Totale	Si
60.2	SLE RA 2	-0.001	78.5	10000	350	Variabile	Si
60.2	SLE RA 31	-0.001	78.5	10000	350	Variabile	Si
54.9	SLE RA 30	0	78.5	10000	350	Variabile	Si
60.2	SLE RA 29	-0.001	78.5	10000	350	Variabile	Si
54.9	SLE RA 28	0	78.5	10000	350	Variabile	Si

Superelemento in acciaio composto dall'asta 112

Caratteristiche del materiale

Acciaio: S275, fyk = 2750

Caratteristiche geometriche

Lunghezza: 170.7
Nodo iniziale: 106 Nodo finale: 120
Cerniera iniziale: No Cerniera finale: No
Sovraresistenza: 0% Sisma Z: No

Caratteristiche della sezione

Sezione	Rotazione	Area	Jx	Jy	ix	iy	Wx	Wy	Wplx	Wply
HEA240	0	76.92	7771.3	2768.96	10.05	6	675.77	230.75	745.47	351.79

Verifiche di resistenza

Verifiche a forza assiale §4.2.4.1.2.1 - §4.2.4.1.2.2 NTC18

X	Comb.	Sfruttamento	Classe	NEd	Nc,Rd	Nt,Rd	Riduzione da taglio	ρx	ρy	Verifica
0	SLU 118	0.194	1	-39109	201468.8		1	0	0	Si

Verifiche a forza assiale SLD §4.2.4.1.2.1 - §4.2.4.1.2.2 NTC18

X	Comb.	Sfruttamento	Classe	NEd	Nc,Rd	Nt,Rd	Riduzione da taglio	ρx	ρy	Verifica
0	SLD 1	0.042	1	-8488.5	201468.8		1	0	0	Si

Verifica a taglio X §4.2.4.1.2.4 NTC18

X	Comb.	Sfruttamento	VEd	Vc,Rd	Av	Interazione taglio-torsione	Riduzione torsione	Verifica
113.8	SLV 11	0.003	-299.1	92797.5	61.47	Considerata	1	Si

Verifica a taglio X SLD §4.2.4.1.2.4 NTC18

X	Comb.	Sfruttamento	VEd	Vc,Rd	Av	Interazione taglio-torsione	Riduzione torsione	Verifica
170.7	SLD 12	0.001	-113.5	92896.1	61.47	Considerata	1	Si

Verifica a taglio Y §4.2.4.1.2.4 NTC18

X	Comb.	Sfruttamento	VEd	Vc,Rd	Av	Interazione taglio-torsione	Riduzione torsione	Verifica
170.7	SLU 118	0.153	-5835.3	38202.6	25.26	Considerata	1	Si

Verifica a taglio Y SLD §4.2.4.1.2.4 NTC18

X	Comb.	Sfruttamento	VEd	Vc,Rd	Av	Interazione taglio-torsione	Riduzione torsione	Verifica
170.7	SLD 4	0.081	-3110.2	38202.6	25.26	Considerata	1	Si

Verifica a torsione §4.2.4.1.2.5 NTC18

X	Comb.	Sfruttamento torsione	TEd	TRd	Riduzione taglio resistente	Sfruttamento taglio-torsione	τEd,totale	τRd	Verifica
170.7	SLV 10	0.004	164.6	38489.3	Considerata				Si

Verifica a torsione SLD §4.2.4.1.2.5 NTC18

X	Comb.	Sfruttamento torsione	TEd	TRd	Riduzione taglio resistente	Sfruttamento taglio-torsione	τEd,totale	τRd	Verifica
0	SLD 9	0.002	62.6	38489.3	Considerata				Si

Verifica a presso/tenso flessione retta X §§ 4.2.4.1.2.3 - 4.2.4.1.2.6 - 4.2.4.1.2.7 - 4.2.4.1.2.8 NTC18

Verifiche eseguite utilizzando la formula conservativa (6.2) §6.2.1 EN 1993-1-1:2005.

X	Comb.	Sfruttamento	Classe	NEd	NRd	Rid. NRd da VEd	Mx,Ed	Mx,Rd	Rid. Mx,Rd da VEd	Rid. Mx,Rd da NEd	ρx	ρy	Verifica
11.4	SLU 85	0.354	1	-39058.8	201468.8	1	-312397	1952423	1		0	0	Si

Verifica a presso/tenso flessione retta Y §§ 4.2.4.1.2.3 - 4.2.4.1.2.6 - 4.2.4.1.2.7 - 4.2.4.1.2.8 NTC18

Verifiche eseguite utilizzando la formula conservativa (6.2) §6.2.1 EN 1993-1-1:2005.

X	Comb.	Sfruttamento	Classe	NEd	NRd	Rid. NRd da VEd	My,Ed	My,Rd	Rid. My,Rd da VEd	Rid. My,Rd da NEd	ρx	ρy	Verifica
130.9	SLV 15	0.051	1	-5452.5	201468.8	1	-22490	921364	1		0	0	Si

Verifica a presso/tenso flessione deviata §§ 4.2.4.1.2.3 - 4.2.4.1.2.6 - 4.2.4.1.2.7 - 4.2.4.1.2.8 NTC18

Verifiche eseguite utilizzando la formula conservativa (6.2) §6.2.1 EN 1993-1-1:2005.

X	Comb.	Sfruttamento	Classe	NEd	NRd	Rid. NRd da VEd	Mx,Ed	Mx,Rd	My,Ed	My,Rd	Rid. Mx,Rd da VEd	Rid. Mx,Rd da NEd	Rid. My,Rd da VEd	Rid. My,Rd da NEd	α	β	ρx	ρy	Verifica
170.7	SLV 7	0.182	1	-7617.9	201468.8	1	98149	1952423	-86845	921364	1		1				0	0	Si

Verifica a presso/tenso flessione deviata SLD §§ 4.2.4.1.2.3 - 4.2.4.1.2.6 - 4.2.4.1.2.7 - 4.2.4.1.2.8 NTC18

Verifiche eseguite utilizzando la formula conservativa (6.2) §6.2.1 EN 1993-1-1:2005.

X	Comb.	Sfruttamento	Classe	NEd	NRd	Rid. NRd da VEd	Mx,Ed	Mx,Rd	My,Ed	My,Rd	Rid. Mx,Rd da VEd	Rid. Mx,Rd da NEd	Rid. My,Rd da VEd	Rid. My,Rd da NEd	α	β	ρx	ρy	Verifica
170.7	SLD 8	0.123	1	-7333.4	201468.8	1	98480	1952423	-32938	921364	1		1				0	0	Si

Verifiche ad instabilità

Caratteristiche iniziali

Membratura principale per controllo snellezza; Calcolo di snellezze ed N critici condotti secondo gli assi principali;
Curva X: b; Curva Y: c; Svergolamento: Carico all'estradosso; Curva svergolamento: b;

Dati per instabilità attorno a x

Numero rit.	Presente	Ascissa	Campata	βx/m	Vincolo a entrambi estremi	λx/m	λVer
1	Si	0					
			1-2	1	Si	17	Si, (<200)
2	Si	170.7					

Dati per instabilità attorno a y

Numero rit.	Presente	Ascissa	Campata	βy/n	k,LT	kw,LT	Vincolo a entrambi estremi	λy/n	λVer
1	Si	0							
			1-2	1	1	1	Si	28.4	Si, (<200)
2	Si	170.7							

Verifica di stabilità per pressoflessione §C.4.2.4.1.3.3.2 NTC18

X	Comb.	Sfruttamento	Classe	NEd	NRk	Mx,Ed max	Mx,Rk	My,Ed max	My,Rk	χ,x	χ,y	kxx	kxy	kyx	kyy	χ,LT	Verifica
0	SLU 118	0.356	1	-39109	211542.2	312528.1	2050044	23.3	967432.2	1	0.935	0.769	0.39	0.928	0.651	1	Si

Verifica di stabilità per pressoflessione SLD §C.4.2.4.1.3.3.2 NTC18

X	Comb.	Sfruttamento	Classe	NEd	NRk	Mx,Ed max	Mx,Rk	My,Ed max	My,Rk	χ,x	χ,y	kxx	kxy	kyx	kyy	χ,LT	Verifica
0	SLD 7	0.116	1	-7913.5	211542.2	98479.7	2050044	32937.7	967432.2	1	0.935	0.613	0.46	0.928	0.767	1	Si

Verifica di stabilità a taglio anima Y §4.2.4.1.2.4 [4.2.27] NTC18

η	hw	tw	hw/tw max	Verifica
1.2	20.6	0.8	55.46	Si

Verifica di stabilità a taglio anima Y SLD §4.2.4.1.2.4 [4.2.27] NTC18

η	hw	tw	hw/tw max	Verifica
1.2	20.6	0.8	55.46	Si

Verifiche a deformabilità

Mensola X: No; Mensola Y: No.

Frecce lungo X

Ascissa freccia	Combinazione	Freccia	Luce	L/f	L/f,min	Tipo	Verifica
96.7	SLE RA 1	0	170.7	10000	250	Totale	Si
96.7	SLE RA 31	0	170.7	10000	250	Totale	Si
96.7	SLE RA 30	0	170.7	10000	250	Totale	Si
96.7	SLE RA 29	0	170.7	10000	250	Totale	Si
96.7	SLE RA 28	0	170.7	10000	250	Totale	Si
96.7	SLE RA 2	0	170.7	10000	350	Variabile	Si
85.3	SLE RA 31	0	170.7	10000	350	Variabile	Si
85.3	SLE RA 30	0	170.7	10000	350	Variabile	Si
85.3	SLE RA 29	0	170.7	10000	350	Variabile	Si
85.3	SLE RA 28	0	170.7	10000	350	Variabile	Si

Frecce lungo Y

Ascissa freccia	Combinazione	Freccia	Luce	L/f	L/f,min	Tipo	Verifica
74	SLE RA 19	-0.039	170.7	4345.2	250	Totale	Si
74	SLE RA 18	-0.039	170.7	4357.4	250	Totale	Si
74	SLE RA 7	-0.039	170.7	4362.7	250	Totale	Si
74	SLE RA 6	-0.039	170.7	4374.9	250	Totale	Si
74	SLE RA 15	-0.039	170.7	4387.2	250	Totale	Si
68.3	SLE RA 19	-0.021	170.7	7975	350	Variabile	Si
68.3	SLE RA 18	-0.021	170.7	8015.8	350	Variabile	Si

Ascissa freccia	Combinazione	Freccia	Luce	L/f	L/f,min	Tipo	Verifica
74	SLE RA 7	-0.021	170.7	8034.9	350	Variabile	Si
74	SLE RA 6	-0.021	170.7	8076.4	350	Variabile	Si
74	SLE RA 15	-0.021	170.7	8118.2	350	Variabile	Si

Superelemento in acciaio composto dall'asta 113

Caratteristiche del materiale

Acciaio: S275, fyk = 2750

Caratteristiche geometriche

Lunghezza: 170.7
Nodo iniziale: 105 Nodo finale: 120
Cerniera iniziale: No Cerniera finale: No
Sovraresistenza: 0% Sisma Z: No

Caratteristiche della sezione

Sezione	Rotazione	Area	Jx	Jy	ix	iy	Wx	Wy	Wplx	Wply
HEA240	0	76.92	7771.3	2768.96	10.05	6	675.77	230.75	745.47	351.79

Verifiche di resistenza

Verifiche a forza assiale §4.2.4.1.2.1 - §4.2.4.1.2.2 NTC18

X	Comb.	Sfruttamento	Classe	NEd	Nc,Rd	Nt,Rd	Riduzione da taglio	ρx	ρy	Verifica
0	SLU 118	0.194	1	-39113.1	201468.8		1	0	0	Si

Verifiche a forza assiale SLD §4.2.4.1.2.1 - §4.2.4.1.2.2 NTC18

X	Comb.	Sfruttamento	Classe	NEd	Nc,Rd	Nt,Rd	Riduzione da taglio	ρx	ρy	Verifica
0	SLD 14	0.042	1	-8488.5	201468.8		1	0	0	Si

Verifica a taglio X §4.2.4.1.2.4 NTC18

X	Comb.	Sfruttamento	VEd	Vc,Rd	Av	Interazione taglio-torsione	Riduzione torsione	Verifica
170.7	SLV 8	0.003	299.1	92797.5	61.47	Considerata	1	Si

Verifica a taglio X SLD §4.2.4.1.2.4 NTC18

X	Comb.	Sfruttamento	VEd	Vc,Rd	Av	Interazione taglio-torsione	Riduzione torsione	Verifica
170.7	SLD 8	0.001	113.5	92896.1	61.47	Considerata	1	Si

Verifica a taglio Y §4.2.4.1.2.4 NTC18

X	Comb.	Sfruttamento	VEd	Vc,Rd	Av	Interazione taglio-torsione	Riduzione torsione	Verifica
170.7	SLU 118	0.153	-5836.4	38202.6	25.26	Considerata	1	Si

Verifica a taglio Y SLD §4.2.4.1.2.4 NTC18

X	Comb.	Sfruttamento	VEd	Vc,Rd	Av	Interazione taglio-torsione	Riduzione torsione	Verifica
170.7	SLD 16	0.081	-3110.2	38202.6	25.26	Considerata	1	Si

Verifica a torsione §4.2.4.1.2.5 NTC18

X	Comb.	Sfruttamento torsione	TEd	TRd	Riduzione taglio resistente	Sfruttamento taglio-torsione	τEd,totale	τRd	Verifica
91	SLV 5	0.004	-164.6	38489.3	Considerata				Si

Verifica a torsione SLD §4.2.4.1.2.5 NTC18

X	Comb.	Sfruttamento torsione	TEd	TRd	Riduzione taglio resistente	Sfruttamento taglio-torsione	τEd,totale	τRd	Verifica
0	SLD 5	0.002	-62.6	38489.3	Considerata				Si

Verifica a presso/tenso flessione retta X §§ 4.2.4.1.2.3 - 4.2.4.1.2.6 - 4.2.4.1.2.7 - 4.2.4.1.2.8 NTC18

Verifiche eseguite utilizzando la formula conservativa (6.2) §6.2.1 EN 1993-1-1:2005.

X	Comb.	Sfruttamento	Classe	NEd	NRd	Rid. NRd da VEd	Mx,Ed	Mx,Rd	Rid. Mx,Rd da VEd	Rid. Mx,Rd da NEd	ρx	ρy	Verifica
11.4	SLU 85	0.354	1	-39062.8	201468.8	1	-312548	1952423	1		0	0	Si

Verifica a presso/tenso flessione retta Y §§ 4.2.4.1.2.3 - 4.2.4.1.2.6 - 4.2.4.1.2.7 - 4.2.4.1.2.8 NTC18

Verifiche eseguite utilizzando la formula conservativa (6.2) §6.2.1 EN 1993-1-1:2005.

X	Comb.	Sfruttamento	Classe	NEd	NRd	Rid. NRd da VEd	My,Ed	My,Rd	Rid. My,Rd da VEd	Rid. My,Rd da NEd	ρx	ρy	Verifica
130.9	SLV 3	0.051	1	-5452.5	201468.8	1	22490	921364	1		0	0	Si

Verifica a presso/tenso flessione deviata §§ 4.2.4.1.2.3 - 4.2.4.1.2.6 - 4.2.4.1.2.7 - 4.2.4.1.2.8 NTC18

Verifiche eseguite utilizzando la formula conservativa (6.2) §6.2.1 EN 1993-1-1:2005.

X	Comb.	Sfruttamento	Classe	NEd	NRd	Rid. NRd da VEd	Mx,Ed	Mx,Rd	My,Ed	My,Rd	Rid. Mx,Rd da VEd	Rid. Mx,Rd da NEd	Rid. My,Rd da VEd	Rid. My,Rd da NEd	α	β	ρx	ρy	Verifica
170.7	SLV 12	0.182	1	-7617.9	201468.8	1	98149	1952423	86845	921364	1		1				0	0	Si

Verifica a presso/tenso flessione deviata SLD §§ 4.2.4.1.2.3 - 4.2.4.1.2.6 - 4.2.4.1.2.7 - 4.2.4.1.2.8 NTC18

Verifiche eseguite utilizzando la formula conservativa (6.2) §6.2.1 EN 1993-1-1:2005.

X	Comb.	Sfruttamento	Classe	NEd	NRd	Rid. NRd da VEd	Mx,Ed	Mx,Rd	My,Ed	My,Rd	Rid. Mx,Rd da VEd	Rid. Mx,Rd da NEd	Rid. My,Rd da VEd	Rid. My,Rd da NEd	α	β	ρx	ρy	Verifica
170.7	SLD 12	0.123	1	-7333.4	201468.8	1	98480	1952423	32938	921364	1		1				0	0	Si

Verifiche ad instabilità

Caratteristiche iniziali

Membratura principale per controllo snellezza; Calcolo di snellezze ed N critici condotti secondo gli assi principali;
Curva X: b; Curva Y: c; Svergolamento: Carico all'estradosso; Curva svergolamento: b;

Dati per instabilità attorno a x

Numero rit.	Presente	Ascissa	Campata	βx/m	Vincolo a entrambi estremi	λx/m	λVer
1	Si	0					
			1-2	1	Si	17	Si, (<200)
2	Si	170.7					

Dati per instabilità attorno a y

Numero rit.	Presente	Ascissa	Campata	βy/n	k,LT	kw,LT	Vincolo a entrambi estremi	λy/n	λVer
1	Si	0							
			1-2	1	1	1	Si	28.4	Si, (<200)
2	Si	170.7							

Verifica di stabilità per pressoflessione §C.4.2.4.1.3.3.2 NTC18

X	Comb.	Sfruttamento	Classe	NEd	NRk	Mx,Ed max	Mx,Rk	My,Ed max	My,Rk	χ,x	χ,y	kxx	kxy	kyx	kyy	χ,LT	Verifica
0	SLU 118	0.356	1	-39113.1	211542.2	312673	2050044	23.3	967432.2	1	0.935	0.769	0.39	0.928	0.65	1	Si

Verifica di stabilità per pressoflessione SLD §C.4.2.4.1.3.3.2 NTC18

X	Comb.	Sfruttamento	Classe	NEd	NRk	Mx,Ed max	Mx,Rk	My,Ed max	My,Rk	χ,x	χ,y	kxx	kxy	kyx	kyy	χ,LT	Verifica
0	SLD 11	0.116	1	-7913.5	211542.2	98479.7	2050044	32937.7	967432.2	1	0.935	0.613	0.46	0.928	0.767	1	Si

Verifica di stabilità a taglio anima Y §4.2.4.1.2.4 [4.2.27] NTC18

η	hw	tw	hw/tw max	Verifica
1.2	20.6	0.8	55.46	Si

Verifica di stabilità a taglio anima Y SLD §4.2.4.1.2.4 [4.2.27] NTC18

η	hw	tw	hw/tw max	Verifica
1.2	20.6	0.8	55.46	Si

Verifiche a deformabilità

Mensola X: No; Mensola Y: No.

Frecce lungo X

Ascissa freccia	Combinazione	Freccia	Luce	L/f	L/f,min	Tipo	Verifica
96.7	SLE RA 1	0	170.7	10000	250	Totale	Si
96.7	SLE RA 31	0	170.7	10000	250	Totale	Si
96.7	SLE RA 30	0	170.7	10000	250	Totale	Si
96.7	SLE RA 29	0	170.7	10000	250	Totale	Si
96.7	SLE RA 28	0	170.7	10000	250	Totale	Si
96.7	SLE RA 2	0	170.7	10000	350	Variabile	Si
85.3	SLE RA 31	0	170.7	10000	350	Variabile	Si
85.3	SLE RA 30	0	170.7	10000	350	Variabile	Si
85.3	SLE RA 29	0	170.7	10000	350	Variabile	Si
85.3	SLE RA 28	0	170.7	10000	350	Variabile	Si

Frecce lungo Y

Ascissa freccia	Combinazione	Freccia	Luce	L/f	L/f,min	Tipo	Verifica
74	SLE RA 19	-0.039	170.7	4344.1	250	Totale	Si
74	SLE RA 18	-0.039	170.7	4356.2	250	Totale	Si
74	SLE RA 7	-0.039	170.7	4362.3	250	Totale	Si
74	SLE RA 6	-0.039	170.7	4374.5	250	Totale	Si
74	SLE RA 15	-0.039	170.7	4386.4	250	Totale	Si
68.3	SLE RA 19	-0.021	170.7	7971	350	Variabile	Si
68.3	SLE RA 18	-0.021	170.7	8011.8	350	Variabile	Si
74	SLE RA 7	-0.021	170.7	8033.4	350	Variabile	Si
74	SLE RA 6	-0.021	170.7	8074.9	350	Variabile	Si
74	SLE RA 15	-0.021	170.7	8115.6	350	Variabile	Si

Superelemento in acciaio composto dall'asta 114

Caratteristiche del materiale

Acciaio: S275, fyk = 2750

Caratteristiche geometriche

Lunghezza: 128
Nodo iniziale: 56 Nodo finale: 55
Cerniera iniziale: Svincolo: M2, M3 Cerniera finale: No
Sovraresistenza: 0% Sisma Z: No

Caratteristiche della sezione

Sezione	Rotazione	Area	Jx	Jy	ix	iy	Wx	Wy	Wplx	Wply
HEA160	0	38.82	1674.7	615.62	6.57	3.98	220.36	76.95	245.43	117.67

Verifiche di resistenza

Verifiche a forza assiale §4.2.4.1.2.1 - §4.2.4.1.2.2 NTC18

X	Comb.	Sfruttamento	Classe	NEd	Nc,Rd	Nt,Rd	Riduzione da taglio	ρx	ρy	Verifica
46.9	SLU 118	0.153		15516.4		101662.9	1	0	0	Si

Verifiche a forza assiale SLD §4.2.4.1.2.1 - §4.2.4.1.2.2 NTC18

X	Comb.	Sfruttamento	Classe	NEd	Nc,Rd	Nt,Rd	Riduzione da taglio	ρx	ρy	Verifica
0	SLD 14	0.02		1998		101662.9	1	0	0	Si

Verifica a taglio X §4.2.4.1.2.4 NTC18

X	Comb.	Sfruttamento	VEd	Vc,Rd	Av	Interazione taglio-torsione	Riduzione torsione	Verifica
128	SLV 8	0.001	48.6	43041.2	30.78	Considerata	0.92	Si

Verifica a taglio Y §4.2.4.1.2.4 NTC18

X	Comb.	Sfruttamento	VEd	Vc,Rd	Av	Interazione taglio-torsione	Riduzione torsione	Verifica
128	SLU 85	0.01	-199.7	20045.7	13.26	Considerata	1	Si

Verifica a taglio Y SLD §4.2.4.1.2.4 NTC18

X	Comb.	Sfruttamento	VEd	Vc,Rd	Av	Interazione taglio-torsione	Riduzione torsione	Verifica
128	SLD 14	0.003	-57	19879.9	13.26	Considerata	0.99	Si

Verifica a torsione §4.2.4.1.2.5 NTC18

X	Comb.	Sfruttamento torsione	TEd	TRd	Riduzione taglio resistente	Sfruttamento taglio-torsione	τEd,totale	τRd	Verifica
68.3	SLV 5	0.181	-2655.4	14685.6	Considerata				Si

Verifica a torsione SLD §4.2.4.1.2.5 NTC18

X	Comb.	Sfruttamento torsione	TEd	TRd	Riduzione taglio resistente	Sfruttamento taglio-torsione	τEd,totale	τRd	Verifica
68.3	SLD 5	0.069	-1007	14685.6	Considerata				Si

Verifica a presso/tenso flessione retta X §§ 4.2.4.1.2.3 - 4.2.4.1.2.6 - 4.2.4.1.2.7 - 4.2.4.1.2.8 NTC18

Verifiche eseguite utilizzando la formula conservativa (6.2) §6.2.1 EN 1993-1-1:2005.

X	Comb.	Sfruttamento	Classe	NEd	NRd	Rid. NRd da VEd	Mx,Ed	Mx,Rd	Rid. Mx,Rd da VEd	Rid. Mx,Rd da NEd	ρx	ρy	Verifica
128	SLU 85	0.187	1	15516.4	101662.9	1	22313	642783	1		0	0	Si

Verifica a presso/tenso flessione retta X SLD §§ 4.2.4.1.2.3 - 4.2.4.1.2.6 - 4.2.4.1.2.7 - 4.2.4.1.2.8 NTC18

Verifiche eseguite utilizzando la formula conservativa (6.2) §6.2.1 EN 1993-1-1:2005.

X	Comb.	Sfruttamento	Classe	NEd	NRd	Rid. NRd da VEd	Mx,Ed	Mx,Rd	Rid. Mx,Rd da VEd	Rid. Mx,Rd da NEd	ρx	ρy	Verifica
12.8	SLD 13	0.02	1	1998	101662.9	1	256	642783	1		0	0	Si

Verifica a presso/tenso flessione retta Y §§ 4.2.4.1.2.3 - 4.2.4.1.2.6 - 4.2.4.1.2.7 - 4.2.4.1.2.8 NTC18

Verifiche eseguite utilizzando la formula conservativa (6.2) §6.2.1 EN 1993-1-1:2005.

X	Comb.	Sfruttamento	Classe	NEd	NRd	Rid. NRd da VEd	My,Ed	My,Rd	Rid. My,Rd da VEd	Rid. My,Rd da NEd	ρx	ρy	Verifica
128	SLV 7	0.037	1	1686.7	101662.9	1	6223	308186	1		0	0	Si

Verifica a presso/tenso flessione retta Y SLD §§ 4.2.4.1.2.3 - 4.2.4.1.2.6 - 4.2.4.1.2.7 - 4.2.4.1.2.8 NTC18

Verifiche eseguite utilizzando la formula conservativa (6.2) §6.2.1 EN 1993-1-1:2005.

X	Comb.	Sfruttamento	Classe	NEd	NRd	Rid. NRd da VEd	My,Ed	My,Rd	Rid. My,Rd da VEd	Rid. My,Rd da NEd	ρx	ρy	Verifica
98.1	SLD 8	0.023	1	1752.2	101662.9	1	1810	308186	1		0	0	Si

Verifica a presso/tenso flessione deviata §§ 4.2.4.1.2.3 - 4.2.4.1.2.6 - 4.2.4.1.2.7 - 4.2.4.1.2.8 NTC18

Verifiche eseguite utilizzando la formula conservativa (6.2) §6.2.1 EN 1993-1-1:2005.

X	Comb.	Sfruttamento	Classe	NEd	NRd	Rid. NRd da VEd	Mx,Ed	Mx,Rd	My,Ed	My,Rd	Rid. Mx,Rd da VEd	Rid. Mx,Rd da NEd	Rid. My,Rd da VEd	Rid. My,Rd da NEd	α	β	ρx	ρy	Verifica
128	SLV 11	0.045	1	1931.1	101662.9	1	3732	642783	6223	308186	1		1				0	0	Si

Verifica a presso/tenso flessione deviata SLD §§ 4.2.4.1.2.3 - 4.2.4.1.2.6 - 4.2.4.1.2.7 - 4.2.4.1.2.8 NTC18

Verifiche eseguite utilizzando la formula conservativa (6.2) §6.2.1 EN 1993-1-1:2005.

X	Comb.	Sfruttamento	Classe	NEd	NRd	Rid. NRd da VEd	Mx,Ed	Mx,Rd	My,Ed	My,Rd	Rid. Mx,Rd da VEd	Rid. Mx,Rd da NEd	Rid. My,Rd da VEd	Rid. My,Rd da NEd	α	β	ρx	ρy	Verifica
128	SLD 11	0.03	1	1865.6	101662.9	1	2684	642783	2361	308186	1		1				0	0	Si

Verifiche ad instabilità

Caratteristiche iniziali

Membratura principale per controllo snellezza; Calcolo di snellezze ed N critici condotti secondo gli assi principali;
Curva X: b; Curva Y: c; Svergolamento: Carico all'estradosso; Curva svergolamento: b;

Dati per instabilità attorno a x

Numero rit.	Presente	Ascissa	Campata	βx/m	Vincolo a entrambi estremi	λx/m	λVer
1	Si	0					
			1-2	1	Si	19.5	Si, (<200)
2	Si	128					

Dati per instabilità attorno a y

Numero rit.	Presente	Ascissa	Campata	βy/n	k,LT	kw,LT	Vincolo a entrambi estremi	λy/n	λVer
1	Si	0							
			1-2	1	1	1	Si	32.1	Si, (<200)

Numero rit.	Presente	Ascissa	Campata	βy/n	k,LT	kw,LT	Vincolo a entrambi estremi	λy/n	λVer
2	Si	128							

Verifica di stabilità a taglio anima Y §4.2.4.1.2.4 [4.2.27] NTC18

η	hw	tw	hw/tw max	Verifica
1.2	13.4	0.6	55.46	Si

Verifica di stabilità a taglio anima Y SLD §4.2.4.1.2.4 [4.2.27] NTC18

η	hw	tw	hw/tw max	Verifica
1.2	13.4	0.6	55.46	Si

Verifiche a deformabilità

Mensola X: No; Mensola Y: No.

Frecce lungo X

Ascissa freccia	Combinazione	Freccia	Luce	L/f	L/f,min	Tipo	Verifica
72.5	SLE RA 1	0	128	10000	250	Totale	Si
72.5	SLE RA 31	0	128	10000	250	Totale	Si
72.5	SLE RA 30	0	128	10000	250	Totale	Si
72.5	SLE RA 29	0	128	10000	250	Totale	Si
72.5	SLE RA 28	0	128	10000	250	Totale	Si
72.5	SLE RA 2	0	128	10000	350	Variabile	Si
72.5	SLE RA 31	0	128	10000	350	Variabile	Si
72.5	SLE RA 30	0	128	10000	350	Variabile	Si
72.5	SLE RA 29	0	128	10000	350	Variabile	Si
72.5	SLE RA 28	0	128	10000	350	Variabile	Si

Frecce lungo Y

Ascissa freccia	Combinazione	Freccia	Luce	L/f	L/f,min	Tipo	Verifica
89.6	SLE RA 1	0	128	10000	250	Totale	Si
76.8	SLE RA 31	0.003	128	10000	250	Totale	Si
89.6	SLE RA 30	0	128	10000	250	Totale	Si
76.8	SLE RA 29	0.003	128	10000	250	Totale	Si
89.6	SLE RA 28	0	128	10000	250	Totale	Si
72.5	SLE RA 2	0.004	128	10000	350	Variabile	Si
72.5	SLE RA 31	0.003	128	10000	350	Variabile	Si
72.5	SLE RA 30	0	128	10000	350	Variabile	Si
72.5	SLE RA 29	0.003	128	10000	350	Variabile	Si
72.5	SLE RA 28	0	128	10000	350	Variabile	Si

Superelemento in acciaio composto dall'asta 115

Caratteristiche del materiale

Acciaio: S275, fyk = 2750

Caratteristiche geometriche

Lunghezza: 339
Nodo iniziale: 55 Nodo finale: 54
Cerniera iniziale: No Cerniera finale: No
Sovraresistenza: 0% Sisma Z: No

Caratteristiche della sezione

Sezione	Rotazione	Area	Jx	Jy	ix	iy	Wx	Wy	Wplx	Wply
HEA160	0	38.82	1674.7	615.62	6.57	3.98	220.36	76.95	245.43	117.67

Verifiche di resistenza

Verifiche a forza assiale §4.2.4.1.2.1 - §4.2.4.1.2.2 NTC18

X	Comb.	Sfruttamento	Classe	NEd	Nc,Rd	Nt,Rd	Riduzione da taglio	ρx	ρy	Verifica
339	SLU 118	0.185		18829.7		101662.9	1	0	0	Si

Verifiche a forza assiale SLD §4.2.4.1.2.1 - §4.2.4.1.2.2 NTC18

X	Comb.	Sfruttamento	Classe	NEd	Nc,Rd	Nt,Rd	Riduzione da taglio	ρx	ρy	Verifica
339	SLD 11	0.007		665.1		101662.9	1	0	0	Si

Verifica a taglio Y §4.2.4.1.2.4 NTC18

X	Comb.	Sfruttamento	VEd	Vc,Rd	Av	Interazione taglio-torsione	Riduzione torsione	Verifica
0	SLV 13	0.004	72.3	20045.7	13.26	Considerata	1	Si

Verifica a taglio Y SLD §4.2.4.1.2.4 NTC18

X	Comb.	Sfruttamento	VEd	Vc,Rd	Av	Interazione taglio-torsione	Riduzione torsione	Verifica
339	SLD 4	0.003	-61.2	20045.7	13.26	Considerata	1	Si

Verifica a presso/tenso flessione retta X §§ 4.2.4.1.2.3 - 4.2.4.1.2.6 - 4.2.4.1.2.7 - 4.2.4.1.2.8 NTC18

Verifiche eseguite utilizzando la formula conservativa (6.2) §6.2.1 EN 1993-1-1:2005.

X	Comb.	Sfruttamento	Classe	NEd	NRd	Rid. NRd da VEd	Mx,Ed	Mx,Rd	Rid. Mx,Rd da VEd	Rid. Mx,Rd da NEd	ρx	ρy	Verifica
169.5	SLU 85	0.222	1	18829.7	101662.9	1	-23733	642783	1		0	0	Si

Verifica a presso/tenso flessione retta Y §§ 4.2.4.1.2.3 - 4.2.4.1.2.6 - 4.2.4.1.2.7 - 4.2.4.1.2.8 NTC18

Verifiche eseguite utilizzando la formula conservativa (6.2) §6.2.1 EN 1993-1-1:2005.

X	Comb.	Sfruttamento	Classe	NEd	NRd	Rid. NRd da VEd	My,Ed	My,Rd	Rid. My,Rd da VEd	Rid. My,Rd da NEd	ρx	ρy	Verifica
22.6	SLV 9	0.015	1	665.1	101662.9	1	2531	308186	1		0	0	Si

Verifica a presso/tenso flessione retta Y SLD §§ 4.2.4.1.2.3 - 4.2.4.1.2.6 - 4.2.4.1.2.7 - 4.2.4.1.2.8 NTC18

Verifiche eseguite utilizzando la formula conservativa (6.2) §6.2.1 EN 1993-1-1:2005.

X	Comb.	Sfruttamento	Classe	NEd	NRd	Rid. NRd da VEd	My,Ed	My,Rd	Rid. My,Rd da VEd	Rid. My,Rd da NEd	ρx	ρy	Verifica
11.3	SLD 9	0.01	1	665.1	101662.9	1	963	308186	1		0	0	Si

Verifica a presso/tenso flessione deviata §§ 4.2.4.1.2.3 - 4.2.4.1.2.6 - 4.2.4.1.2.7 - 4.2.4.1.2.8 NTC18

Verifiche eseguite utilizzando la formula conservativa (6.2) §6.2.1 EN 1993-1-1:2005.

X	Comb.	Sfruttamento	Classe	NEd	NRd	Rid. NRd da VEd	Mx,Ed	Mx,Rd	My,Ed	My,Rd	Rid. Mx,Rd da VEd	Rid. Mx,Rd da NEd	Rid. My,Rd da VEd	Rid. My,Rd da NEd	α	β	ρx	ρy	Verifica
192.1	SLV 10	0.022	1	665.1	101662.9	1	-4450	642783	2530	308186	1		1				0	0	Si

Verifica a presso/tenso flessione deviata SLD §§ 4.2.4.1.2.3 - 4.2.4.1.2.6 - 4.2.4.1.2.7 - 4.2.4.1.2.8 NTC18

Verifiche eseguite utilizzando la formula conservativa (6.2) §6.2.1 EN 1993-1-1:2005.

X	Comb.	Sfruttamento	Classe	NEd	NRd	Rid. NRd da VEd	Mx,Ed	Mx,Rd	My,Ed	My,Rd	Rid. Mx,Rd da VEd	Rid. Mx,Rd da NEd	Rid. My,Rd da VEd	Rid. My,Rd da NEd	α	β	ρx	ρy	Verifica
158.2	SLD 5	0.017	1	665.1	101662.9	1	-4401	642783	962	308186	1		1				0	0	Si

Verifiche ad instabilità

Caratteristiche iniziali

Membratura principale per controllo snellezza; Calcolo di snellezze ed N critici condotti secondo gli assi principali;
Curva X: b; Curva Y: c; Svergolamento: Carico all'estradosso; Curva svergolamento: b;

Dati per instabilità attorno a x

Numero rit.	Presente	Ascissa	Campata	βx/m	Vincolo a entrambi estremi	λx/m	λVer
1	Si	0					
			1-2	1	Si	51.6	Si, (<200)
2	Si	339					

Dati per instabilità attorno a y

Numero rit.	Presente	Ascissa	Campata	βy/n	k,LT	kw,LT	Vincolo a entrambi estremi	λy/n	λVer
1	Si	0							
			1-2	1	1	1	Si	85.1	Si, (<200)
2	Si	339							

Verifica a svergolamento con trazione §4.2.4.1.3.2 NTC18 - §5.5.3 ENV 1993-1-1:1994

X	Comb.	Sfruttamento	Classe	Obblig.	NEd	Mx,Ed	Mx,Eff,Ed	Mb,Rd,x	χ,LT	λ adim. LT	L,LT	M,critico	Verifica
169.5	SLU 100	0.004	1	Si	864.6	-5704.3	-2268.5	514049.3	0.8	0.831	339	976699	Si

Verifica di stabilità per tenso-flessione deviata §5.5.3 - §5.5.4 ENV 1993-1-1:1994

X	Comb.	Sfruttamento	Classe	NEd	Mx,Ed	Mx,Eff,Ed	My,Ed	χ,LT	kLT	ky	M,critico	Wx	Wy	Verifica
192.1	SLV 9	0.012	1	665.1	-4450.4	-1807.5	2529.8	0.8	1	1	976699	245.4	117.7	Si

Verifica di stabilità per tenso-flessione deviata SLD §5.5.3 - §5.5.4 ENV 1993-1-1:1994

X	Comb.	Sfruttamento	Classe	NEd	Mx,Ed	Mx,Eff,Ed	My,Ed	χ,LT	kLT	ky	M,critico	Wx	Wy	Verifica
158.2	SLD 5	0.007	1	665.1	-4401	-1758.1	962.1	0.8	1	1	976699	245.4	117.7	Si

Verifica di stabilità a taglio anima Y §4.2.4.1.2.4 [4.2.27] NTC18

η	hw	tw	hw/tw max	Verifica
1.2	13.4	0.6	55.46	Si

Verifica di stabilità a taglio anima Y SLD §4.2.4.1.2.4 [4.2.27] NTC18

η	hw	tw	hw/tw max	Verifica
1.2	13.4	0.6	55.46	Si

Verifiche a deformabilità

Mensola X: No; Mensola Y: No.

Frecce lungo X

Ascissa freccia	Combinazione	Freccia	Luce	L/f	L/f,min	Tipo	Verifica
169.5	SLE RA 1	0	339	10000	250	Totale	Si
169.5	SLE RA 31	0	339	10000	250	Totale	Si
169.5	SLE RA 30	0	339	10000	250	Totale	Si
169.5	SLE RA 29	0	339	10000	250	Totale	Si
169.5	SLE RA 28	0	339	10000	250	Totale	Si
169.5	SLE RA 2	0	339	10000	350	Variabile	Si
169.5	SLE RA 31	0	339	10000	350	Variabile	Si
169.5	SLE RA 30	0	339	10000	350	Variabile	Si
169.5	SLE RA 29	0	339	10000	350	Variabile	Si
169.5	SLE RA 28	0	339	10000	350	Variabile	Si

Frecce lungo Y

Ascissa freccia	Combinazione	Freccia	Luce	L/f	L/f,min	Tipo	Verifica
169.5	SLE RA 19	-0.065	339	5244.2	250	Totale	Si
169.5	SLE RA 18	-0.064	339	5264.7	250	Totale	Si
169.5	SLE RA 7	-0.064	339	5273.6	250	Totale	Si
169.5	SLE RA 6	-0.064	339	5294.3	250	Totale	Si
169.5	SLE RA 15	-0.064	339	5314.6	250	Totale	Si
169.5	SLE RA 19	-0.049	339	6905.1	350	Variabile	Si
169.5	SLE RA 18	-0.049	339	6940.6	350	Variabile	Si
169.5	SLE RA 7	-0.049	339	6956.1	350	Variabile	Si

Ascissa freccia	Combinazione	Freccia	Luce	L/f	L/f,min	Tipo	Verifica
169.5	SLE RA 6	-0.048	339	6992.2	350	Variabile	Si
169.5	SLE RA 15	-0.048	339	7027.6	350	Variabile	Si

Superelemento in acciaio composto dall'asta 116

Caratteristiche del materiale

Acciaio: S275, fyk = 2750

Caratteristiche geometriche

Lunghezza: 128
Nodo iniziale: 54 Nodo finale: 53
Cerniera iniziale: No Cerniera finale: Svincolo: M2, M3
Sovraresistenza: 0% Sisma Z: No

Caratteristiche della sezione

Sezione	Rotazione	Area	Jx	Jy	ix	iy	Wx	Wy	Wplx	Wply
HEA160	0	38.82	1674.7	615.62	6.57	3.98	220.36	76.95	245.43	117.67

Verifiche di resistenza

Verifiche a forza assiale §4.2.4.1.2.1 - §4.2.4.1.2.2 NTC18

X	Comb.	Sfruttamento	Classe	NEd	Nc,Rd	Nt,Rd	Riduzione da taglio	ρx	ρy	Verifica
128	SLU 118	0.153		15520.4		101662.9	1	0	0	Si

Verifiche a forza assiale SLD §4.2.4.1.2.1 - §4.2.4.1.2.2 NTC18

X	Comb.	Sfruttamento	Classe	NEd	Nc,Rd	Nt,Rd	Riduzione da taglio	ρx	ρy	Verifica
0	SLD 1	0.02		1998		101662.9	1	0	0	Si

Verifica a taglio X §4.2.4.1.2.4 NTC18

X	Comb.	Sfruttamento	VEd	Vc,Rd	Av	Interazione taglio-torsione	Riduzione torsione	Verifica
128	SLV 12	0.001	-48.6	43041.2	30.78	Considerata	0.92	Si

Verifica a taglio Y §4.2.4.1.2.4 NTC18

X	Comb.	Sfruttamento	VEd	Vc,Rd	Av	Interazione taglio-torsione	Riduzione torsione	Verifica
0	SLU 118	0.01	199.7	20045.7	13.26	Considerata	1	Si

Verifica a taglio Y SLD §4.2.4.1.2.4 NTC18

X	Comb.	Sfruttamento	VEd	Vc,Rd	Av	Interazione taglio-torsione	Riduzione torsione	Verifica
0	SLD 1	0.003	57	19879.9	13.26	Considerata	0.99	Si

Verifica a torsione §4.2.4.1.2.5 NTC18

X	Comb.	Sfruttamento torsione	TEd	TRd	Riduzione taglio resistente	Sfruttamento taglio-torsione	τEd,totale	τRd	Verifica
128	SLV 10	0.181	2655.4	14685.6	Considerata				Si

Verifica a torsione SLD §4.2.4.1.2.5 NTC18

X	Comb.	Sfruttamento torsione	TEd	TRd	Riduzione taglio resistente	Sfruttamento taglio-torsione	τEd,totale	τRd	Verifica
128	SLD 10	0.069	1007	14685.6	Considerata				Si

Verifica a presso/tenso flessione retta X §§ 4.2.4.1.2.3 - 4.2.4.1.2.6 - 4.2.4.1.2.7 - 4.2.4.1.2.8 NTC18

Verifiche eseguite utilizzando la formula conservativa (6.2) §6.2.1 EN 1993-1-1:2005.

X	Comb.	Sfruttamento	Classe	NEd	NRd	Rid. NRd da VEd	Mx,Ed	Mx,Rd	Rid. Mx,Rd da VEd	Rid. Mx,Rd da NEd	ρx	ρy	Verifica
0	SLU 118	0.187	1	15520.4	101662.9	1	22312	642783	1		0	0	Si

Verifica a presso/tenso flessione retta X SLD §§ 4.2.4.1.2.3 - 4.2.4.1.2.6 - 4.2.4.1.2.7 - 4.2.4.1.2.8 NTC18

Verifiche eseguite utilizzando la formula conservativa (6.2) §6.2.1 EN 1993-1-1:2005.

X	Comb.	Sfruttamento	Classe	NEd	NRd	Rid. NRd da VEd	Mx,Ed	Mx,Rd	Rid. Mx,Rd da VEd	Rid. Mx,Rd da NEd	ρx	ρy	Verifica
115.2	SLD 1	0.02	1	1998	101662.9	1	256	642783	1		0	0	Si

Verifica a presso/tenso flessione retta Y §§ 4.2.4.1.2.3 - 4.2.4.1.2.6 - 4.2.4.1.2.7 - 4.2.4.1.2.8 NTC18

Verifiche eseguite utilizzando la formula conservativa (6.2) §6.2.1 EN 1993-1-1:2005.

X	Comb.	Sfruttamento	Classe	NEd	NRd	Rid. NRd da VEd	My,Ed	My,Rd	Rid. My,Rd da VEd	Rid. My,Rd da NEd	ρx	ρy	Verifica
0	SLV 12	0.037	1	1686.7	101662.9	1	6223	308186	1		0	0	Si

Verifica a presso/tenso flessione retta Y SLD §§ 4.2.4.1.2.3 - 4.2.4.1.2.6 - 4.2.4.1.2.7 - 4.2.4.1.2.8 NTC18

Verifiche eseguite utilizzando la formula conservativa (6.2) §6.2.1 EN 1993-1-1:2005.

X	Comb.	Sfruttamento	Classe	NEd	NRd	Rid. NRd da VEd	My,Ed	My,Rd	Rid. My,Rd da VEd	Rid. My,Rd da NEd	ρx	ρy	Verifica
29.9	SLD 11	0.023	1	1752.2	101662.9	1	1810	308186	1		0	0	Si

Verifica a presso/tenso flessione deviata §§ 4.2.4.1.2.3 - 4.2.4.1.2.6 - 4.2.4.1.2.7 - 4.2.4.1.2.8 NTC18

Verifiche eseguite utilizzando la formula conservativa (6.2) §6.2.1 EN 1993-1-1:2005.

X	Comb.	Sfruttamento	Classe	NEd	NRd	Rid. NRd da VEd	Mx,Ed	Mx,Rd	My,Ed	My,Rd	Rid. Mx,Rd da VEd	Rid. Mx,Rd da NEd	Rid. My,Rd da VEd	Rid. My,Rd da NEd	α	β	ρx	ρy	Verifica
0	SLV 8	0.045	1	1931.1	101662.9	1	3732	642783	6223	308186	1		1				0	0	Si

Verifica a presso/tenso flessione deviata SLD §§ 4.2.4.1.2.3 - 4.2.4.1.2.6 - 4.2.4.1.2.7 - 4.2.4.1.2.8 NTC18

Verifiche eseguite utilizzando la formula conservativa (6.2) §6.2.1 EN 1993-1-1:2005.

X	Comb.	Sfruttamento	Classe	NEd	NRd	Rid. NRd da VEd	Mx,Ed	Mx,Rd	My,Ed	My,Rd	Rid. Mx,Rd da VEd	Rid. Mx,Rd da NEd	Rid. My,Rd da VEd	Rid. My,Rd da NEd	α	β	ρx	ρy	Verifica
0	SLD 7	0.03	1	1865.6	101662.9	1	2684	642783	2361	308186	1		1				0	0	Si

Verifiche ad instabilità

Caratteristiche iniziali

Membratura principale per controllo snellezza; Calcolo di snellezze ed N critici condotti secondo gli assi principali;
Curva X: b; Curva Y: c; Svergolamento: Carico all'estradosso; Curva svergolamento: b;

Dati per instabilità attorno a x

Numero rit.	Presente	Ascissa	Campata	βx/m	Vincolo a entrambi estremi	λx/m	λVer
1	Si	0					
			1-2	1	Si	19.5	Si, (<200)
2	Si	128					

Dati per instabilità attorno a y

Numero rit.	Presente	Ascissa	Campata	βy/n	k,LT	kw,LT	Vincolo a entrambi estremi	λy/n	λVer
1	Si	0							
			1-2	1	1	1	Si	32.1	Si, (<200)
2	Si	128							

Verifica di stabilità a taglio anima Y §4.2.4.1.2.4 [4.2.27] NTC18

η	hw	tw	hw/tw max	Verifica
1.2	13.4	0.6	55.46	Si

Verifica di stabilità a taglio anima Y SLD §4.2.4.1.2.4 [4.2.27] NTC18

η	hw	tw	hw/tw max	Verifica
1.2	13.4	0.6	55.46	Si

Verifiche a deformabilità

Mensola X: No; Mensola Y: No.

Frecce lungo X

Ascissa freccia	Combinazione	Freccia	Luce	L/f	L/f,min	Tipo	Verifica
55.5	SLE RA 1	0	128	10000	250	Totale	Si
55.5	SLE RA 31	0	128	10000	250	Totale	Si
55.5	SLE RA 30	0	128	10000	250	Totale	Si
55.5	SLE RA 29	0	128	10000	250	Totale	Si
55.5	SLE RA 28	0	128	10000	250	Totale	Si
55.5	SLE RA 2	0	128	10000	350	Variabile	Si
55.5	SLE RA 31	0	128	10000	350	Variabile	Si
55.5	SLE RA 30	0	128	10000	350	Variabile	Si
55.5	SLE RA 29	0	128	10000	350	Variabile	Si
55.5	SLE RA 28	0	128	10000	350	Variabile	Si

Frecce lungo Y

Ascissa freccia	Combinazione	Freccia	Luce	L/f	L/f,min	Tipo	Verifica
38.4	SLE RA 1	0	128	10000	250	Totale	Si
51.2	SLE RA 31	0.003	128	10000	250	Totale	Si
38.4	SLE RA 30	0	128	10000	250	Totale	Si
51.2	SLE RA 29	0.003	128	10000	250	Totale	Si
38.4	SLE RA 28	0	128	10000	250	Totale	Si
55.5	SLE RA 2	0.004	128	10000	350	Variabile	Si
55.5	SLE RA 31	0.003	128	10000	350	Variabile	Si
55.5	SLE RA 30	0	128	10000	350	Variabile	Si
55.5	SLE RA 29	0.003	128	10000	350	Variabile	Si
55.5	SLE RA 28	0	128	10000	350	Variabile	Si

Superelemento in acciaio composto dall'asta 117

Caratteristiche del materiale

Acciaio: S275, fyk = 2750

Caratteristiche geometriche

Lunghezza: 197.7
Nodo iniziale: 17 Nodo finale: 55
Cerniera iniziale: Svincolo: M2, M3 Cerniera finale: Svincolo: M2, M3
Sovraresistenza: 0% Sisma Z: No

Caratteristiche della sezione

Sezione	Rotazione	Area	Jx	Jy	ix	iy	Wx	Wy	Wplx	Wply
HEA160	0	38.82	1674.7	615.62	6.57	3.98	220.36	76.95	245.43	117.67

Verifiche di resistenza

Verifiche a forza assiale §4.2.4.1.2.1 - §4.2.4.1.2.2 NTC18

X	Comb.	Sfruttamento	Classe	NEd	Nc,Rd	Nt,Rd	Riduzione da taglio	ρx	ρy	Verifica
0	SLU 85	0.346	1	-35206.7	101662.9		1	0	0	Si

Verifiche a forza assiale SLD §4.2.4.1.2.1 - §4.2.4.1.2.2 NTC18

X	Comb.	Sfruttamento	Classe	NEd	Nc,Rd	Nt,Rd	Riduzione da taglio	ρx	ρy	Verifica
0	SLD 14	0.067	1	-6777.8	101662.9		1	0	0	Si

Verifica a taglio Y §4.2.4.1.2.4 NTC18

X	Comb.	Sfruttamento	VEd	Vc,Rd	Av	Interazione taglio-torsione	Riduzione torsione	Verifica
197.7	SLU 117	0.002	-33.8	20045.7	13.26	Considerata	1	Si

Verifica a taglio Y SLD §4.2.4.1.2.4 NTC18

X	Comb.	Sfruttamento	VEd	Vc,Rd	Av	Interazione taglio-torsione	Riduzione torsione	Verifica
0	SLD 9	0.001	26	19633	13.26	Considerata	0.98	Si

Verifica a torsione §4.2.4.1.2.5 NTC18

X	Comb.	Sfruttamento torsione	TEd	TRd	Riduzione taglio resistente	Sfruttamento taglio-torsione	τEd,totale	τRd	Verifica
105.4	SLV 9	0.134	-1971.7	14685.6	Considerata				Si

Verifica a torsione SLD §4.2.4.1.2.5 NTC18

X	Comb.	Sfruttamento torsione	TEd	TRd	Riduzione taglio resistente	Sfruttamento taglio-torsione	τEd,totale	τRd	Verifica
13.2	SLD 9	0.051	-748.1	14685.6	Considerata				Si

Verifica a presso/tenso flessione retta X §§ 4.2.4.1.2.3 - 4.2.4.1.2.6 - 4.2.4.1.2.7 - 4.2.4.1.2.8 NTC18

Verifiche eseguite utilizzando la formula conservativa (6.2) §6.2.1 EN 1993-1-1:2005.

X	Comb.	Sfruttamento	Classe	NEd	NRd	Rid. NRd da VEd	Mx,Ed	Mx,Rd	Rid. Mx,Rd da VEd	Rid. Mx,Rd da NEd	ρx	ρy	Verifica
92.2	SLU 118	0.349	1	-35188.2	101662.9	1	-1661	642783	1		0	0	Si

Verifica a presso/tenso flessione retta X SLD §§ 4.2.4.1.2.3 - 4.2.4.1.2.6 - 4.2.4.1.2.7 - 4.2.4.1.2.8 NTC18

Verifiche eseguite utilizzando la formula conservativa (6.2) §6.2.1 EN 1993-1-1:2005.

X	Comb.	Sfruttamento	Classe	NEd	NRd	Rid. NRd da VEd	Mx,Ed	Mx,Rd	Rid. Mx,Rd da VEd	Rid. Mx,Rd da NEd	ρx	ρy	Verifica
92.2	SLD 14	0.069	1	-6763.6	101662.9	1	-1278	642783	1		0	0	Si

Verifiche ad instabilità

Caratteristiche iniziali

Membratura principale per controllo snellezza; Calcolo di snellezze ed N critici condotti secondo gli assi principali;
Curva X: b; Curva Y: c; Svergolamento: Carico all'estradosso; Curva svergolamento: b;

Dati per instabilità attorno a x

Numero rit.	Presente	Ascissa	Campata	βx/m	Vincolo a entrambi estremi	λx/m	λVer
1	Si	0					
			1-2	1	Si	30.1	Si, (<200)
2	Si	197.7					

Dati per instabilità attorno a y

Numero rit.	Presente	Ascissa	Campata	βy/n	k,LT	kw,LT	Vincolo a entrambi estremi	λy/n	λVer
1	Si	0							
			1-2	1	1	1	Si	49.6	Si, (<200)
2	Si	197.7							

Verifica di stabilità per pressoflessione §C.4.2.4.1.3.3.2 NTC18

X	Comb.	Sfruttamento	Classe	NEd	NRk	Mx,Ed max	Mx,Rk	My,Ed max	My,Rk	χ,x	χ,y	kxx	kxy	kyx	kyy	χ,LT	Verifica
0	SLU 85	0.434	1	-35206.7	106746.1	1668.7	674922.6	1.5	323595.1	0.947	0.802	1.001	0.704	0.965	1.173	0.933	Si

Verifica di stabilità per pressoflessione SLD §C.4.2.4.1.3.3.2 NTC18

X	Comb.	Sfruttamento	Classe	NEd	NRk	Mx,Ed max	Mx,Rk	My,Ed max	My,Rk	χ,x	χ,y	kxx	kxy	kyx	kyy	χ,LT	Verifica
0	SLD 14	0.085	1	-6777.8	106746.1	1283.6	674922.6	1.1	323595.1	0.947	0.802	0.96	0.596	0.993	0.993	0.933	Si

Verifica di stabilità a taglio anima Y §4.2.4.1.2.4 [4.2.27] NTC18

η	hw	tw	hw/tw max	Verifica
1.2	13.4	0.6	55.46	Si

Verifica di stabilità a taglio anima Y SLD §4.2.4.1.2.4 [4.2.27] NTC18

η	hw	tw	hw/tw max	Verifica
1.2	13.4	0.6	55.46	Si

Verifiche a deformabilità

Mensola X: No; Mensola Y: No.

Frecce lungo X

Ascissa freccia	Combinazione	Freccia	Luce	L/f	L/f,min	Tipo	Verifica
98.8	SLE RA 1	0	197.7	10000	250	Totale	Si
98.8	SLE RA 31	0	197.7	10000	250	Totale	Si
98.8	SLE RA 30	0	197.7	10000	250	Totale	Si
98.8	SLE RA 29	0	197.7	10000	250	Totale	Si
98.8	SLE RA 28	0	197.7	10000	250	Totale	Si
151.5	SLE RA 2	0	197.7	10000	350	Variabile	Si

Ascissa freccia	Combinazione	Freccia	Luce	L/f	L/f,min	Tipo	Verifica
191.1	SLE RA 31	0	197.7	10000	350	Variabile	Si
145	SLE RA 30	0	197.7	10000	350	Variabile	Si
191.1	SLE RA 29	0	197.7	10000	350	Variabile	Si
191.1	SLE RA 28	0	197.7	10000	350	Variabile	Si

Frecce lungo Y

Ascissa freccia	Combinazione	Freccia	Luce	L/f	L/f,min	Tipo	Verifica
98.8	SLE RA 1	-0.002	197.7	10000	250	Totale	Si
98.8	SLE RA 31	-0.002	197.7	10000	250	Totale	Si
98.8	SLE RA 30	-0.002	197.7	10000	250	Totale	Si
98.8	SLE RA 29	-0.002	197.7	10000	250	Totale	Si
98.8	SLE RA 28	-0.002	197.7	10000	250	Totale	Si
171.3	SLE RA 2	0	197.7	10000	350	Variabile	Si
171.3	SLE RA 31	0	197.7	10000	350	Variabile	Si
191.1	SLE RA 30	0	197.7	10000	350	Variabile	Si
171.3	SLE RA 29	0	197.7	10000	350	Variabile	Si
177.9	SLE RA 28	0	197.7	10000	350	Variabile	Si

Superelemento in acciaio composto dall'asta 118

Caratteristiche del materiale

Acciaio: S275, fyk = 2750

Caratteristiche geometriche

Lunghezza: 197.7
Nodo iniziale: 16 Nodo finale: 54
Cerniera iniziale: Svincolo: M2, M3 Cerniera finale: Svincolo: M2, M3
Sovraresistenza: 0% Sisma Z: No

Caratteristiche della sezione

Sezione	Rotazione	Area	Jx	Jy	ix	iy	Wx	Wy	Wplx	Wply
HEA160	0	38.82	1674.7	615.62	6.57	3.98	220.36	76.95	245.43	117.67

Verifiche di resistenza

Verifiche a forza assiale §4.2.4.1.2.1 - §4.2.4.1.2.2 NTC18

X	Comb.	Sfruttamento	Classe	NEd	Nc,Rd	Nt,Rd	Riduzione da taglio	ρx	ρy	Verifica
0	SLU 85	0.346	1	-35204.5	101662.9		1	0	0	Si

Verifiche a forza assiale SLD §4.2.4.1.2.1 - §4.2.4.1.2.2 NTC18

X	Comb.	Sfruttamento	Classe	NEd	Nc,Rd	Nt,Rd	Riduzione da taglio	ρx	ρy	Verifica
0	SLD 1	0.067	1	-6777.8	101662.9		1	0	0	Si

Verifica a taglio Y §4.2.4.1.2.4 NTC18

X	Comb.	Sfruttamento	VEd	Vc,Rd	Av	Interazione taglio-torsione	Riduzione torsione	Verifica
197.7	SLU 114	0.002	-33.8	20045.7	13.26	Considerata	1	Si

Verifica a taglio Y SLD §4.2.4.1.2.4 NTC18

X	Comb.	Sfruttamento	VEd	Vc,Rd	Av	Interazione taglio-torsione	Riduzione torsione	Verifica
197.7	SLD 6	0.001	-26	19633	13.26	Considerata	0.98	Si

Verifica a torsione §4.2.4.1.2.5 NTC18

X	Comb.	Sfruttamento torsione	TEd	TRd	Riduzione taglio resistente	Sfruttamento taglio-torsione	τEd,totale	τRd	Verifica
0	SLV 5	0.134	1971.7	14685.6	Considerata				Si

Verifica a torsione SLD §4.2.4.1.2.5 NTC18

X	Comb.	Sfruttamento torsione	TEd	TRd	Riduzione taglio resistente	Sfruttamento taglio-torsione	τEd,totale	τRd	Verifica
105.4	SLD 5	0.051	748.1	14685.6	Considerata				Si

Verifica a presso/tenso flessione retta X §§ 4.2.4.1.2.3 - 4.2.4.1.2.6 - 4.2.4.1.2.7 - 4.2.4.1.2.8 NTC18

Verifiche eseguite utilizzando la formula conservativa (6.2) §6.2.1 EN 1993-1-1:2005.

X	Comb.	Sfruttamento	Classe	NEd	NRd	Rid. NRd da VEd	Mx,Ed	Mx,Rd	Rid. Mx,Rd da VEd	Rid. Mx,Rd da NEd	ρx	ρy	Verifica
92.2	SLU 85	0.349	1	-35186	101662.9	1	-1661	642783	1		0	0	Si

Verifica a presso/tenso flessione retta X SLD §§ 4.2.4.1.2.3 - 4.2.4.1.2.6 - 4.2.4.1.2.7 - 4.2.4.1.2.8 NTC18

Verifiche eseguite utilizzando la formula conservativa (6.2) §6.2.1 EN 1993-1-1:2005.

X	Comb.	Sfruttamento	Classe	NEd	NRd	Rid. NRd da VEd	Mx,Ed	Mx,Rd	Rid. Mx,Rd da VEd	Rid. Mx,Rd da NEd	ρx	ρy	Verifica
92.2	SLD 2	0.069	1	-6763.6	101662.9	1	-1278	642783	1		0	0	Si

Verifiche ad instabilità

Caratteristiche iniziali

Membratura principale per controllo snellezza; Calcolo di snellezze ed N critici condotti secondo gli assi principali;
Curva X: b; Curva Y: c; Svergolamento: Carico all'estradosso; Curva svergolamento: b;

Dati per instabilità attorno a x

Numero rit.	Presente	Ascissa	Campata	βx/m	Vincolo a entrambi estremi	λx/m	λVer
1	Si	0					
			1-2	1	Si	30.1	Si, (<200)
2	Si	197.7					

Dati per instabilità attorno a y

Numero rit.	Presente	Ascissa	Campata	βy/n	k,LT	kw,LT	Vincolo a entrambi estremi	λy/n	λVer
1	Si	0							
			1-2	1	1	1	Si	49.6	Si, (<200)
2	Si	197.7							

Verifica di stabilità per pressoflessione §C.4.2.4.1.3.3.2 NTC18

X	Comb.	Sfruttamento	Classe	NEd	NRk	Mx,Ed max	Mx,Rk	My,Ed max	My,Rk	χ,x	χ,y	kxx	kxy	kyx	kyy	χ,LT	Verifica
0	SLU 85	0.434	1	-35204.5	106746.1	1668.7	674922.6	0	323595.1	0.947	0.802	1.001	0.444	0.965	0.741	0.933	Si

Verifica di stabilità per pressoflessione SLD §C.4.2.4.1.3.3.2 NTC18

X	Comb.	Sfruttamento	Classe	NEd	NRk	Mx,Ed max	Mx,Rk	My,Ed max	My,Rk	χ,x	χ,y	kxx	kxy	kyx	kyy	χ,LT	Verifica
0	SLD 1	0.085	1	-6777.8	106746.1	1283.6	674922.6	0	323595.1	0.947	0.802	0.96	0.376	0.993	0.627	0.933	Si

Verifica di stabilità a taglio anima Y §4.2.4.1.2.4 [4.2.27] NTC18

η	hw	tw	hw/tw max	Verifica
1.2	13.4	0.6	55.46	Si

Verifica di stabilità a taglio anima Y SLD §4.2.4.1.2.4 [4.2.27] NTC18

η	hw	tw	hw/tw max	Verifica
1.2	13.4	0.6	55.46	Si

Verifiche a deformabilità

Mensola X: No; Mensola Y: No.

Frecce lungo X

Ascissa freccia	Combinazione	Freccia	Luce	L/f	L/f,min	Tipo	Verifica
164.7	SLE RA 1	0	197.7	10000	250	Totale	Si
184.5	SLE RA 31	0	197.7	10000	250	Totale	Si
184.5	SLE RA 30	0	197.7	10000	250	Totale	Si
184.5	SLE RA 29	0	197.7	10000	250	Totale	Si
184.5	SLE RA 28	0	197.7	10000	250	Totale	Si
177.9	SLE RA 2	0	197.7	10000	350	Variabile	Si
177.9	SLE RA 31	0	197.7	10000	350	Variabile	Si
184.5	SLE RA 30	0	197.7	10000	350	Variabile	Si
177.9	SLE RA 29	0	197.7	10000	350	Variabile	Si
184.5	SLE RA 28	0	197.7	10000	350	Variabile	Si

Frecce lungo Y

Ascissa freccia	Combinazione	Freccia	Luce	L/f	L/f,min	Tipo	Verifica
98.8	SLE RA 1	-0.002	197.7	10000	250	Totale	Si
98.8	SLE RA 31	-0.002	197.7	10000	250	Totale	Si
98.8	SLE RA 30	-0.002	197.7	10000	250	Totale	Si
98.8	SLE RA 29	-0.002	197.7	10000	250	Totale	Si
98.8	SLE RA 28	-0.002	197.7	10000	250	Totale	Si
191.1	SLE RA 2	0	197.7	10000	350	Variabile	Si
191.1	SLE RA 31	0	197.7	10000	350	Variabile	Si
184.5	SLE RA 30	0	197.7	10000	350	Variabile	Si
191.1	SLE RA 29	0	197.7	10000	350	Variabile	Si
191.1	SLE RA 28	0	197.7	10000	350	Variabile	Si

Superelemento in acciaio composto dall'asta 119

Caratteristiche del materiale

Acciaio: S275, fyk = 2750

Caratteristiche geometriche

Lunghezza: 88.1
Nodo iniziale: 55 Nodo finale: 84
Cerniera iniziale: Svincolo: M2, M3 Cerniera finale: Svincolo: M2, M3
Sovraresistenza: 0% Sisma Z: No

Caratteristiche della sezione

Sezione	Rotazione	Area	Jx	Jy	ix	iy	Wx	Wy	Wplx	Wply
HEA160	0	38.82	1674.7	615.62	6.57	3.98	220.36	76.95	245.43	117.67

Verifiche di resistenza

Verifiche a forza assiale §4.2.4.1.2.1 - §4.2.4.1.2.2 NTC18

X	Comb.	Sfruttamento	Classe	NEd	Nc,Rd	Nt,Rd	Riduzione da taglio	ρx	ρy	Verifica
88.1	SLU 7	0.031		3106.5		101662.9	1	0	0	Si

Verifiche a forza assiale SLD §4.2.4.1.2.1 - §4.2.4.1.2.2 NTC18

X	Comb.	Sfruttamento	Classe	NEd	Nc,Rd	Nt,Rd	Riduzione da taglio	ρx	ρy	Verifica
0	SLD 14	0.005	1	-507.4	101662.9		1	0	0	Si

Verifica a taglio Y §4.2.4.1.2.4 NTC18

X	Comb.	Sfruttamento	VEd	Vc,Rd	Av	Interazione taglio-torsione	Riduzione torsione	Verifica
0	SLU 85	0.001	14.4	20045.7	13.26	Considerata	1	Si

Verifica a torsione §4.2.4.1.2.5 NTC18

X	Comb.	Sfruttamento torsione	TEd	TRd	Riduzione taglio resistente	Sfruttamento taglio-torsione	τEd,totale	τRd	Verifica
41.1	SLV 12	0.056	826.6	14685.6	Considerata				Si

Verifica a torsione SLD §4.2.4.1.2.5 NTC18

X	Comb.	Sfruttamento torsione	TEd	TRd	Riduzione taglio resistente	Sfruttamento taglio-torsione	τEd,totale	τRd	Verifica
41.1	SLD 12	0.021	313.5	14685.6	Considerata				Si

Verifica a presso/tenso flessione retta X §§ 4.2.4.1.2.3 - 4.2.4.1.2.6 - 4.2.4.1.2.7 - 4.2.4.1.2.8 NTC18

Verifiche eseguite utilizzando la formula conservativa (6.2) §6.2.1 EN 1993-1-1:2005.

X	Comb.	Sfruttamento	Classe	NEd	NRd	Rid. NRd da VEd	Mx,Ed	Mx,Rd	Rid. Mx,Rd da VEd	Rid. Mx,Rd da NEd	ρx	ρy	Verifica
47	SLU 7	0.031	1	3099.4	101662.9	1	-242	642783	1		0	0	Si

Verifica a presso/tenso flessione retta X SLD §§ 4.2.4.1.2.3 - 4.2.4.1.2.6 - 4.2.4.1.2.7 - 4.2.4.1.2.8 NTC18

Verifiche eseguite utilizzando la formula conservativa (6.2) §6.2.1 EN 1993-1-1:2005.

X	Comb.	Sfruttamento	Classe	NEd	NRd	Rid. NRd da VEd	Mx,Ed	Mx,Rd	Rid. Mx,Rd da VEd	Rid. Mx,Rd da NEd	ρx	ρy	Verifica
41.1	SLD 13	0.005	1	-500.2	101662.9	1	-242	642783	1		0	0	Si

Verifiche ad instabilità

Caratteristiche iniziali

Membratura principale per controllo snellezza; Calcolo di snellezze ed N critici condotti secondo gli assi principali;
Curva X: b; Curva Y: c; Svergolamento: Carico all'estradosso; Curva svergolamento: b;

Dati per instabilità attorno a x

Numero rit.	Presente	Ascissa	Campata	βx/m	Vincolo a entrambi estremi	λx/m	λVer
1	Si	0					
			1-2	1	Si	13.4	Si, (<200)
2	Si	88.1					

Dati per instabilità attorno a y

Numero rit.	Presente	Ascissa	Campata	βy/n	k,LT	kw,LT	Vincolo a entrambi estremi	λy/n	λVer
1	Si	0							
			1-2	1	1	1	Si	22.1	Si, (<200)
2	Si	88.1							

Verifica di stabilità per pressoflessione §C.4.2.4.1.3.3.2 NTC18

X	Comb.	Sfruttamento	Classe	NEd	NRk	Mx,Ed max	Mx,Rk	My,Ed max	My,Rk	χ,x	χ,y	kxx	kxy	kyx	kyy	χ,LT	Verifica
0	SLU 92	0.007	1	-622.9	106746.1	316.2	674922.6	0	323595.1	1	0.972	0.95	0.36	0.855	0.6	1	Si

Verifica di stabilità per pressoflessione SLD §C.4.2.4.1.3.3.2 NTC18

X	Comb.	Sfruttamento	Classe	NEd	NRk	Mx,Ed max	Mx,Rk	My,Ed max	My,Rk	χ,x	χ,y	kxx	kxy	kyx	kyy	χ,LT	Verifica
0	SLD 14	0.005	1	-507.4	106746.1	243.2	674922.6	0	323595.1	1	0.972	0.95	0.36	0.855	0.6	1	Si

Verifica di stabilità a taglio anima Y §4.2.4.1.2.4 [4.2.27] NTC18

η	hw	tw	hw/tw max	Verifica
1.2	13.4	0.6	55.46	Si

Verifica di stabilità a taglio anima Y SLD §4.2.4.1.2.4 [4.2.27] NTC18

η	hw	tw	hw/tw max	Verifica
1.2	13.4	0.6	55.46	Si

Verifiche a deformabilità

Mensola X: No; Mensola Y: No.

Frecce lungo X

Ascissa freccia	Combinazione	Freccia	Luce	L/f	L/f,min	Tipo	Verifica
26.4	SLE RA 1	0	88.1	10000	250	Totale	Si
79.3	SLE RA 31	0	88.1	10000	250	Totale	Si
79.3	SLE RA 30	0	88.1	10000	250	Totale	Si
79.3	SLE RA 29	0	88.1	10000	250	Totale	Si
79.3	SLE RA 28	0	88.1	10000	250	Totale	Si
2.9	SLE RA 2	0	88.1	10000	350	Variabile	Si
76.3	SLE RA 31	0	88.1	10000	350	Variabile	Si
76.3	SLE RA 30	0	88.1	10000	350	Variabile	Si
76.3	SLE RA 29	0	88.1	10000	350	Variabile	Si
76.3	SLE RA 28	0	88.1	10000	350	Variabile	Si

Frecce lungo Y

Ascissa freccia	Combinazione	Freccia	Luce	L/f	L/f,min	Tipo	Verifica
44	SLE RA 1	0	88.1	10000	250	Totale	Si
44	SLE RA 31	0	88.1	10000	250	Totale	Si
44	SLE RA 30	0	88.1	10000	250	Totale	Si
44	SLE RA 29	0	88.1	10000	250	Totale	Si
44	SLE RA 28	0	88.1	10000	250	Totale	Si
85.1	SLE RA 2	0	88.1	10000	350	Variabile	Si
85.1	SLE RA 31	0	88.1	10000	350	Variabile	Si
49.9	SLE RA 30	0	88.1	10000	350	Variabile	Si
85.1	SLE RA 29	0	88.1	10000	350	Variabile	Si
35.2	SLE RA 28	0	88.1	10000	350	Variabile	Si

Superelemento in acciaio composto dall'asta 120

Caratteristiche del materiale

Acciaio: S275, fyk = 2750

Caratteristiche geometriche

Lunghezza: 88.1
Nodo iniziale: 54 Nodo finale: 83
Cerniera iniziale: Svincolo: M2, M3 Cerniera finale: Svincolo: M2, M3
Sovraresistenza: 0% Sisma Z: No

Caratteristiche della sezione

Sezione	Rotazione	Area	Jx	Jy	ix	iy	Wx	Wy	Wplx	Wply
HEA160	0	38.82	1674.7	615.62	6.57	3.98	220.36	76.95	245.43	117.67

Verifiche di resistenza

Verifiche a forza assiale §4.2.4.1.2.1 - §4.2.4.1.2.2 NTC18

X	Comb.	Sfruttamento	Classe	NEd	Nc,Rd	Nt,Rd	Riduzione da taglio	ρx	ρy	Verifica
88.1	SLU 40	0.031		3105.7		101662.9	1	0	0	Si

Verifiche a forza assiale SLD §4.2.4.1.2.1 - §4.2.4.1.2.2 NTC18

X	Comb.	Sfruttamento	Classe	NEd	Nc,Rd	Nt,Rd	Riduzione da taglio	ρx	ρy	Verifica
0	SLD 1	0.005	1	-507.4	101662.9		1	0	0	Si

Verifica a taglio Y §4.2.4.1.2.4 NTC18

X	Comb.	Sfruttamento	VEd	Vc,Rd	Av	Interazione taglio-torsione	Riduzione torsione	Verifica
0	SLU 85	0.001	14.4	20045.7	13.26	Considerata	1	Si

Verifica a torsione §4.2.4.1.2.5 NTC18

X	Comb.	Sfruttamento torsione	TEd	TRd	Riduzione taglio resistente	Sfruttamento taglio-torsione	τEd,totale	τRd	Verifica
88.1	SLV 8	0.056	-826.6	14685.6	Considerata				Si

Verifica a torsione SLD §4.2.4.1.2.5 NTC18

X	Comb.	Sfruttamento torsione	TEd	TRd	Riduzione taglio resistente	Sfruttamento taglio-torsione	τEd,totale	τRd	Verifica
88.1	SLD 8	0.021	-313.5	14685.6	Considerata				Si

Verifica a presso/tenso flessione retta X §§ 4.2.4.1.2.3 - 4.2.4.1.2.6 - 4.2.4.1.2.7 - 4.2.4.1.2.8 NTC18

Verifiche eseguite utilizzando la formula conservativa (6.2) §6.2.1 EN 1993-1-1:2005.

X	Comb.	Sfruttamento	Classe	NEd	NRd	Rid. NRd da VEd	Mx,Ed	Mx,Rd	Rid. Mx,Rd da VEd	Rid. Mx,Rd da NEd	ρx	ρy	Verifica
47	SLU 7	0.031	1	3098.6	101662.9	1	-242	642783	1		0	0	Si

Verifica a presso/tenso flessione retta X SLD §§ 4.2.4.1.2.3 - 4.2.4.1.2.6 - 4.2.4.1.2.7 - 4.2.4.1.2.8 NTC18

Verifiche eseguite utilizzando la formula conservativa (6.2) §6.2.1 EN 1993-1-1:2005.

X	Comb.	Sfruttamento	Classe	NEd	NRd	Rid. NRd da VEd	Mx,Ed	Mx,Rd	Rid. Mx,Rd da VEd	Rid. Mx,Rd da NEd	ρx	ρy	Verifica
41.1	SLD 1	0.005	1	-500.2	101662.9	1	-242	642783	1		0	0	Si

Verifiche ad instabilità

Caratteristiche iniziali

Membratura principale per controllo snellezza; Calcolo di snellezze ed N critici condotti secondo gli assi principali;
Curva X: b; Curva Y: c; Svergolamento: Carico all'estradosso; Curva svergolamento: b;

Dati per instabilità attorno a x

Numero rit.	Presente	Ascissa	Campata	βx/m	Vincolo a entrambi estremi	λx/m	λVer
1	Si	0					
			1-2	1	Si	13.4	Si, (<200)
2	Si	88.1					

Dati per instabilità attorno a y

Numero rit.	Presente	Ascissa	Campata	βy/n	k,LT	kw,LT	Vincolo a entrambi estremi	λy/n	λVer
1	Si	0							
			1-2	1	1	1	Si	22.1	Si, (<200)
2	Si	88.1							

Verifica di stabilità per pressoflessione §C.4.2.4.1.3.3.2 NTC18

X	Comb.	Sfruttamento	Classe	NEd	NRk	Mx,Ed max	Mx,Rk	My,Ed max	My,Rk	χ,x	χ,y	kxx	kxy	kyx	kyy	χ,LT	Verifica
0	SLU 92	0.007	1	-626.2	106746.1	316.2	674922.6	0	323595.1	1	0.972	0.95	0.36	0.855	0.6	1	Si

Verifica di stabilità per pressoflessione SLD §C.4.2.4.1.3.3.2 NTC18

X	Comb.	Sfruttamento	Classe	NEd	NRk	Mx,Ed max	Mx,Rk	My,Ed max	My,Rk	χ,x	χ,y	kxx	kxy	kyx	kyy	χ,LT	Verifica
0	SLD 1	0.005	1	-507.4	106746.1	243.2	674922.6	0	323595.1	1	0.972	0.95	0.36	0.855	0.6	1	Si

Verifica di stabilità a taglio anima Y §4.2.4.1.2.4 [4.2.27] NTC18

η	hw	tw	hw/tw max	Verifica
1.2	13.4	0.6	55.46	Si

Verifica di stabilità a taglio anima Y SLD §4.2.4.1.2.4 [4.2.27] NTC18

η	hw	tw	hw/tw max	Verifica
1.2	13.4	0.6	55.46	Si

Verifiche a deformabilità

Mensola X: No; Mensola Y: No.

Frecce lungo X

Ascissa freccia	Combinazione	Freccia	Luce	L/f	L/f,min	Tipo	Verifica
26.4	SLE RA 1	0	88.1	10000	250	Totale	Si
85.1	SLE RA 31	0	88.1	10000	250	Totale	Si
85.1	SLE RA 30	0	88.1	10000	250	Totale	Si
85.1	SLE RA 29	0	88.1	10000	250	Totale	Si
85.1	SLE RA 28	0	88.1	10000	250	Totale	Si
2.9	SLE RA 2	0	88.1	10000	350	Variabile	Si
61.6	SLE RA 31	0	88.1	10000	350	Variabile	Si
61.6	SLE RA 30	0	88.1	10000	350	Variabile	Si
61.6	SLE RA 29	0	88.1	10000	350	Variabile	Si
73.4	SLE RA 28	0	88.1	10000	350	Variabile	Si

Frecce lungo Y

Ascissa freccia	Combinazione	Freccia	Luce	L/f	L/f,min	Tipo	Verifica
44	SLE RA 1	0	88.1	10000	250	Totale	Si
44	SLE RA 31	0	88.1	10000	250	Totale	Si
44	SLE RA 30	0	88.1	10000	250	Totale	Si
44	SLE RA 29	0	88.1	10000	250	Totale	Si
44	SLE RA 28	0	88.1	10000	250	Totale	Si
85.1	SLE RA 2	0	88.1	10000	350	Variabile	Si
85.1	SLE RA 31	0	88.1	10000	350	Variabile	Si
20.5	SLE RA 30	0	88.1	10000	350	Variabile	Si
85.1	SLE RA 29	0	88.1	10000	350	Variabile	Si
35.2	SLE RA 28	0	88.1	10000	350	Variabile	Si

Superelemento in acciaio composto dall'asta 121

Caratteristiche del materiale

Acciaio: S275, fyk = 2750

Caratteristiche geometriche

Lunghezza: 108.7
Nodo iniziale: 18 Nodo finale: 57
Cerniera iniziale: No Cerniera finale: No
Sovraresistenza: 0% Sisma Z: No

Caratteristiche della sezione

Sezione	Rotazione	Area	Jx	Jy	ix	iy	Wx	Wy	Wplx	Wply
HEA180	0	45.3	2512.55	924.65	7.45	4.52	293.87	102.74	325.17	156.53

Verifiche di resistenza

Verifiche a forza assiale §4.2.4.1.2.1 - §4.2.4.1.2.2 NTC18

X	Comb.	Sfruttamento	Classe	NEd	Nc,Rd	Nt,Rd	Riduzione da taglio	ρx	ρy	Verifica
0	SLU 132	0.226	1	-26850.4	118634.3		1	0	0	Si

Verifiche a forza assiale SLD §4.2.4.1.2.1 - §4.2.4.1.2.2 NTC18

X	Comb.	Sfruttamento	Classe	NEd	Nc,Rd	Nt,Rd	Riduzione da taglio	ρx	ρy	Verifica
0	SLD 15	0.147	1	-17487.5	118634.3		1	0	0	Si

Verifica a taglio X §4.2.4.1.2.4 NTC18

X	Comb.	Sfruttamento	VEd	Vc,Rd	Av	Interazione taglio-torsione	Riduzione torsione	Verifica
65.2	SLV 5	0.002	119.6	54131.6	36.18	Considerata	0.99	Si

Verifica a taglio X SLD §4.2.4.1.2.4 NTC18

X	Comb.	Sfruttamento	VEd	Vc,Rd	Av	Interazione taglio-torsione	Riduzione torsione	Verifica
65.2	SLD 5	0.001	45.4	54489.8	36.18	Considerata	1	Si

Verifica a taglio Y §4.2.4.1.2.4 NTC18

X	Comb.	Sfruttamento	VEd	Vc,Rd	Av	Interazione taglio-torsione	Riduzione torsione	Verifica
108.7	SLU 132	0.09	-1976.8	21950.9	14.52	Considerata	1	Si

Verifica a taglio Y SLD §4.2.4.1.2.4 NTC18

X	Comb.	Sfruttamento	VEd	Vc,Rd	Av	Interazione taglio-torsione	Riduzione torsione	Verifica
108.7	SLD 3	0.071	-1556.8	21919.1	14.52	Considerata	1	Si

Verifica a torsione §4.2.4.1.2.5 NTC18

X	Comb.	Sfruttamento torsione	TEd	TRd	Riduzione taglio resistente	Sfruttamento taglio-torsione	τEd,totale	τRd	Verifica
108.7	SLV 8	0.027	487.5	18118.1	Considerata				Si

Verifica a torsione SLD §4.2.4.1.2.5 NTC18

X	Comb.	Sfruttamento torsione	TEd	TRd	Riduzione taglio resistente	Sfruttamento taglio-torsione	τEd,totale	τRd	Verifica
108.7	SLD 8	0.01	187	18118.1	Considerata				Si

Verifica a presso/tenso flessione retta X §§ 4.2.4.1.2.3 - 4.2.4.1.2.6 - 4.2.4.1.2.7 - 4.2.4.1.2.8 NTC18

Verifiche eseguite utilizzando la formula conservativa (6.2) §6.2.1 EN 1993-1-1:2005.

X	Comb.	Sfruttamento	Classe	NEd	NRd	Rid. NRd da VEd	Mx,Ed	Mx,Rd	Rid. Mx,Rd da VEd	Rid. Mx,Rd da NEd	ρx	ρy	Verifica
25.4	SLU 132	0.237	1	-25088.5	118634.3	1	-21758	851642	1		0	0	Si

Verifica a presso/tenso flessione retta X SLD §§ 4.2.4.1.2.3 - 4.2.4.1.2.6 - 4.2.4.1.2.7 - 4.2.4.1.2.8 NTC18

Verifiche eseguite utilizzando la formula conservativa (6.2) §6.2.1 EN 1993-1-1:2005.

X	Comb.	Sfruttamento	Classe	NEd	NRd	Rid. NRd da VEd	Mx,Ed	Mx,Rd	Rid. Mx,Rd da VEd	Rid. Mx,Rd da NEd	ρx	ρy	Verifica
10.9	SLD 16	0.154	1	-16906.7	118634.3	1	-9789	851642	1		0	0	Si

Verifica a presso/tenso flessione retta Y §§ 4.2.4.1.2.3 - 4.2.4.1.2.6 - 4.2.4.1.2.7 - 4.2.4.1.2.8 NTC18

Verifiche eseguite utilizzando la formula conservativa (6.2) §6.2.1 EN 1993-1-1:2005.

X	Comb.	Sfruttamento	Classe	NEd	NRd	Rid. NRd da VEd	My,Ed	My,Rd	Rid. My,Rd da VEd	Rid. My,Rd da NEd	ρx	ρy	Verifica
0	SLV 11	0.148	1	-17467.3	118634.3	1	472	409967	1		0	0	Si

Verifica a presso/tenso flessione retta Y SLD §§ 4.2.4.1.2.3 - 4.2.4.1.2.6 - 4.2.4.1.2.7 - 4.2.4.1.2.8 NTC18

Verifiche eseguite utilizzando la formula conservativa (6.2) §6.2.1 EN 1993-1-1:2005.

X	Comb.	Sfruttamento	Classe	NEd	NRd	Rid. NRd da VEd	My,Ed	My,Rd	Rid. My,Rd da VEd	Rid. My,Rd da NEd	ρx	ρy	Verifica
0	SLD 9	0.147	1	-17445.3	118634.3	1	-179	409967	1		0	0	Si

Verifica a presso/tenso flessione deviata §§ 4.2.4.1.2.3 - 4.2.4.1.2.6 - 4.2.4.1.2.7 - 4.2.4.1.2.8 NTC18

Verifiche eseguite utilizzando la formula conservativa (6.2) §6.2.1 EN 1993-1-1:2005.

X	Comb.	Sfruttamento	Classe	NEd	NRd	Rid. NRd da VEd	Mx,Ed	Mx,Rd	My,Ed	My,Rd	Rid. Mx,Rd da VEd	Rid. Mx,Rd da NEd	Rid. My,Rd da VEd	Rid. My,Rd da NEd	α	β	ρx	ρy	Verifica
108.7	SLV 6	0.167	1	-11578.5	118634.3	1	32971	851642	12520	409967	1		1				0	0	Si

Verifica a presso/tenso flessione deviata SLD §§ 4.2.4.1.2.3 - 4.2.4.1.2.6 - 4.2.4.1.2.7 - 4.2.4.1.2.8 NTC18

Verifiche eseguite utilizzando la formula conservativa (6.2) §6.2.1 EN 1993-1-1:2005.

X	Comb.	Sfruttamento	Classe	NEd	NRd	Rid. NRd da VEd	Mx,Ed	Mx,Rd	My,Ed	My,Rd	Rid. Mx,Rd da VEd	Rid. Mx,Rd da NEd	Rid. My,Rd da VEd	Rid. My,Rd da NEd	α	β	ρx	ρy	Verifica
29	SLD 10	0.159	1	-15896.3	118634.3	1	-19039	851642	1134	409967	1		1				0	0	Si

Verifiche ad instabilità

Caratteristiche iniziali

Membratura principale per controllo snellezza; Calcolo di snellezze ed N critici condotti secondo gli assi principali;
Curva X: b; Curva Y: c; Svergolamento: Carico all'estradosso; Curva svergolamento: b;

Dati per instabilità attorno a x

Numero rit.	Presente	Ascissa	Campata	βx/m	Vincolo a entrambi estremi	λx/m	λVer
1	Si	0					
			1-2	1	Si	14.6	Si, (<200)
2	Si	108.7					

Dati per instabilità attorno a y

Numero rit.	Presente	Ascissa	Campata	βy/n	k,LT	kw,LT	Vincolo a entrambi estremi	λy/n	λVer
1	Si	0							
			1-2	1	1	1	Si	24	Si, (<200)
2	Si	108.7							

Verifica di stabilità per pressoflessione §C.4.2.4.1.3.3.2 NTC18

X	Comb.	Sfruttamento	Classe	NEd	NRk	Mx,Ed max	Mx,Rk	My,Ed max	My,Rk	χ,x	χ,y	kxx	kxy	kyx	kyy	χ,LT	Verifica
0	SLU 98	0.277	1	-26850.3	124566	40443	894223.7	16.7	430465.2	1	0.961	0.558	0.336	0.877	0.56	1	Si

Verifica di stabilità per pressoflessione SLD §C.4.2.4.1.3.3.2 NTC18

X	Comb.	Sfruttamento	Classe	NEd	NRk	Mx,Ed max	Mx,Rk	My,Ed max	My,Rk	χ,x	χ,y	kxx	kxy	kyx	kyy	χ,LT	Verifica
0	SLD 5	0.191	1	-17409.1	124566	30662.5	894223.7	4752	430465.2	1	0.961	0.572	0.348	0.877	0.581	1	Si

Verifica di stabilità a taglio anima Y §4.2.4.1.2.4 [4.2.27] NTC18

η	hw	tw	hw/tw max	Verifica
1.2	15.2	0.6	55.46	Si

Verifica di stabilità a taglio anima Y SLD §4.2.4.1.2.4 [4.2.27] NTC18

η	hw	tw	hw/tw max	Verifica
1.2	15.2	0.6	55.46	Si

Verifiche a deformabilità

Mensola X: No; Mensola Y: No.

Frecce lungo X

Ascissa freccia	Combinazione	Freccia	Luce	L/f	L/f,min	Tipo	Verifica
65.2	SLE RA 1	0	108.7	10000	250	Totale	Si
54.3	SLE RA 31	0	108.7	10000	250	Totale	Si
65.2	SLE RA 30	0	108.7	10000	250	Totale	Si

Ascissa freccia	Combinazione	Freccia	Luce	L/f	L/f,min	Tipo	Verifica
54.3	SLE RA 29	0	108.7	10000	250	Totale	Si
65.2	SLE RA 28	0	108.7	10000	250	Totale	Si
61.6	SLE RA 2	0	108.7	10000	350	Variabile	Si
61.6	SLE RA 31	0	108.7	10000	350	Variabile	Si
65.2	SLE RA 30	0	108.7	10000	350	Variabile	Si
61.6	SLE RA 29	0	108.7	10000	350	Variabile	Si
61.6	SLE RA 28	0	108.7	10000	350	Variabile	Si

Frecce lungo Y

Ascissa freccia	Combinazione	Freccia	Luce	L/f	L/f,min	Tipo	Verifica
50.7	SLE RA 1	-0.008	108.7	10000	250	Totale	Si
50.7	SLE RA 31	-0.008	108.7	10000	250	Totale	Si
50.7	SLE RA 30	-0.008	108.7	10000	250	Totale	Si
50.7	SLE RA 29	-0.008	108.7	10000	250	Totale	Si
50.7	SLE RA 28	-0.008	108.7	10000	250	Totale	Si
50.7	SLE RA 2	0	108.7	10000	350	Variabile	Si
61.6	SLE RA 31	0	108.7	10000	350	Variabile	Si
61.6	SLE RA 30	0	108.7	10000	350	Variabile	Si
61.6	SLE RA 29	0	108.7	10000	350	Variabile	Si
61.6	SLE RA 28	0	108.7	10000	350	Variabile	Si

Superelemento in acciaio composto dall'asta 122

Caratteristiche del materiale

Acciaio: S275, fyk = 2750

Caratteristiche geometriche

Lunghezza: 108.7
Nodo iniziale: 19 Nodo finale: 60
Cerniera iniziale: No Cerniera finale: No
Sovraresistenza: 0% Sisma Z: No

Caratteristiche della sezione

Sezione	Rotazione	Area	Jx	Jy	ix	iy	Wx	Wy	Wplx	Wply
HEA180	0	45.3	2512.55	924.65	7.45	4.52	293.87	102.74	325.17	156.53

Verifiche di resistenza

Verifiche a forza assiale §4.2.4.1.2.1 - §4.2.4.1.2.2 NTC18

X	Comb.	Sfruttamento	Classe	NEd	Nc,Rd	Nt,Rd	Riduzione da taglio	ρx	ρy	Verifica
0	SLU 99	0.226	1	-26797.3	118634.3		1	0	0	Si

Verifiche a forza assiale SLD §4.2.4.1.2.1 - §4.2.4.1.2.2 NTC18

X	Comb.	Sfruttamento	Classe	NEd	Nc,Rd	Nt,Rd	Riduzione da taglio	ρx	ρy	Verifica
0	SLD 4	0.147	1	-17487.5	118634.3		1	0	0	Si

Verifica a taglio X §4.2.4.1.2.4 NTC18

X	Comb.	Sfruttamento	VEd	Vc,Rd	Av	Interazione taglio-torsione	Riduzione torsione	Verifica
108.7	SLV 9	0.002	-119.6	54131.6	36.18	Considerata	0.99	Si

Verifica a taglio X SLD §4.2.4.1.2.4 NTC18

X	Comb.	Sfruttamento	VEd	Vc,Rd	Av	Interazione taglio-torsione	Riduzione torsione	Verifica
108.7	SLD 9	0.001	-45.4	54489.8	36.18	Considerata	1	Si

Verifica a taglio Y §4.2.4.1.2.4 NTC18

X	Comb.	Sfruttamento	VEd	Vc,Rd	Av	Interazione taglio-torsione	Riduzione torsione	Verifica
108.7	SLU 99	0.09	-1978.1	21950.9	14.52	Considerata	1	Si

Verifica a taglio Y SLD §4.2.4.1.2.4 NTC18

X	Comb.	Sfruttamento	VEd	Vc,Rd	Av	Interazione taglio-torsione	Riduzione torsione	Verifica
108.7	SLD 16	0.071	-1556.8	21919.1	14.52	Considerata	1	Si

Verifica a torsione §4.2.4.1.2.5 NTC18

X	Comb.	Sfruttamento torsione	TEd	TRd	Riduzione taglio resistente	Sfruttamento taglio-torsione	τEd,totale	τRd	Verifica
108.7	SLV 11	0.027	-487.5	18118.1	Considerata				Si

Verifica a torsione SLD §4.2.4.1.2.5 NTC18

X	Comb.	Sfruttamento torsione	TEd	TRd	Riduzione taglio resistente	Sfruttamento taglio-torsione	τEd,totale	τRd	Verifica
50.7	SLD 12	0.01	-187	18118.1	Considerata				Si

Verifica a presso/tenso flessione retta X §§ 4.2.4.1.2.3 - 4.2.4.1.2.6 - 4.2.4.1.2.7 - 4.2.4.1.2.8 NTC18

Verifiche eseguite utilizzando la formula conservativa (6.2) §6.2.1 EN 1993-1-1:2005.

X	Comb.	Sfruttamento	Classe	NEd	NRd	Rid. NRd da VEd	Mx,Ed	Mx,Rd	Rid. Mx,Rd da VEd	Rid. Mx,Rd da NEd	ρx	ρy	Verifica
25.4	SLU 132	0.237	1	-25035.3	118634.3	1	-21726	851642	1		0	0	Si

Verifica a presso/tenso flessione retta X SLD §§ 4.2.4.1.2.3 - 4.2.4.1.2.6 - 4.2.4.1.2.7 - 4.2.4.1.2.8 NTC18

Verifiche eseguite utilizzando la formula conservativa (6.2) §6.2.1 EN 1993-1-1:2005.

X	Comb.	Sfruttamento	Classe	NEd	NRd	Rid. NRd da VEd	Mx,Ed	Mx,Rd	Rid. Mx,Rd da VEd	Rid. Mx,Rd da NEd	ρx	ρy	Verifica
10.9	SLD 3	0.154	1	-16906.7	118634.3	1	-9789	851642	1		0	0	Si

Verifica a presso/tenso flessione retta Y §§ 4.2.4.1.2.3 - 4.2.4.1.2.6 - 4.2.4.1.2.7 - 4.2.4.1.2.8 NTC18

Verifiche eseguite utilizzando la formula conservativa (6.2) §6.2.1 EN 1993-1-1:2005.

X	Comb.	Sfruttamento	Classe	NEd	NRd	Rid. NRd da VEd	My,Ed	My,Rd	Rid. My,Rd da VEd	Rid. My,Rd da NEd	ρx	ρy	Verifica
0	SLV 7	0.148	1	-17467.3	118634.3	1	-472	409967	1		0	0	Si

Verifica a presso/tenso flessione retta Y SLD §§ 4.2.4.1.2.3 - 4.2.4.1.2.6 - 4.2.4.1.2.7 - 4.2.4.1.2.8 NTC18

Verifiche eseguite utilizzando la formula conservativa (6.2) §6.2.1 EN 1993-1-1:2005.

X	Comb.	Sfruttamento	Classe	NEd	NRd	Rid. NRd da VEd	My,Ed	My,Rd	Rid. My,Rd da VEd	Rid. My,Rd da NEd	ρx	ρy	Verifica
0	SLD 5	0.147	1	-17445.3	118634.3	1	179	409967	1		0	0	Si

Verifica a presso/tenso flessione deviata §§ 4.2.4.1.2.3 - 4.2.4.1.2.6 - 4.2.4.1.2.7 - 4.2.4.1.2.8 NTC18

Verifiche eseguite utilizzando la formula conservativa (6.2) §6.2.1 EN 1993-1-1:2005.

X	Comb.	Sfruttamento	Classe	NEd	NRd	Rid. NRd da VEd	Mx,Ed	Mx,Rd	My,Ed	My,Rd	Rid. Mx,Rd da VEd	Rid. Mx,Rd da NEd	Rid. My,Rd da VEd	Rid. My,Rd da NEd	α	β	ρx	ρy	Verifica
108.7	SLV 9	0.167	1	-11578.5	118634.3	1	32971	851642	-12520	409967	1		1				0	0	Si

Verifica a presso/tenso flessione deviata SLD §§ 4.2.4.1.2.3 - 4.2.4.1.2.6 - 4.2.4.1.2.7 - 4.2.4.1.2.8 NTC18

Verifiche eseguite utilizzando la formula conservativa (6.2) §6.2.1 EN 1993-1-1:2005.

X	Comb.	Sfruttamento	Classe	NEd	NRd	Rid. NRd da VEd	Mx,Ed	Mx,Rd	My,Ed	My,Rd	Rid. Mx,Rd da VEd	Rid. Mx,Rd da NEd	Rid. My,Rd da VEd	Rid. My,Rd da NEd	α	β	ρx	ρy	Verifica
29	SLD 6	0.159	1	-15896.3	118634.3	1	-19039	851642	-1134	409967	1		1				0	0	Si

Verifiche ad instabilità

Caratteristiche iniziali

Membratura principale per controllo snellezza; Calcolo di snellezze ed N critici condotti secondo gli assi principali;
Curva X: b; Curva Y: c; Svergolamento: Carico all'estradosso; Curva svergolamento: b;

Dati per instabilità attorno a x

Numero rit.	Presente	Ascissa	Campata	βx/m	Vincolo a entrambi estremi	λx/m	λVer
1	Si	0					
			1-2	1	Si	14.6	Si, (<200)
2	Si	108.7					

Dati per instabilità attorno a y

Numero rit.	Presente	Ascissa	Campata	βy/n	k,LT	kw,LT	Vincolo a entrambi estremi	λy/n	λVer
1	Si	0							
			1-2	1	1	1	Si	24	Si, (<200)
2	Si	108.7							

Verifica di stabilità per pressoflessione §C.4.2.4.1.3.3.2 NTC18

X	Comb.	Sfruttamento	Classe	NEd	NRk	Mx,Ed max	Mx,Rk	My,Ed max	My,Rk	χ,x	χ,y	kxx	kxy	kyx	kyy	χ,LT	Verifica
0	SLU 98	0.277	1	-26797.2	124566	40583.8	894223.7	16.8	430465.2	1	0.961	0.555	0.336	0.877	0.56	1	Si

Verifica di stabilità per pressoflessione SLD §C.4.2.4.1.3.3.2 NTC18

X	Comb.	Sfruttamento	Classe	NEd	NRk	Mx,Ed max	Mx,Rk	My,Ed max	My,Rk	χ,x	χ,y	kxx	kxy	kyx	kyy	χ,LT	Verifica
0	SLD 10	0.191	1	-17409.1	124566	30662.5	894223.7	4752	430465.2	1	0.961	0.572	0.348	0.877	0.581	1	Si

Verifica di stabilità a taglio anima Y §4.2.4.1.2.4 [4.2.27] NTC18

η	hw	tw	hw/tw max	Verifica
1.2	15.2	0.6	55.46	Si

Verifica di stabilità a taglio anima Y SLD §4.2.4.1.2.4 [4.2.27] NTC18

η	hw	tw	hw/tw max	Verifica
1.2	15.2	0.6	55.46	Si

Verifiche a deformabilità

Mensola X: No; Mensola Y: No.

Frecce lungo X

Ascissa freccia	Combinazione	Freccia	Luce	L/f	L/f,min	Tipo	Verifica
65.2	SLE RA 1	0	108.7	10000	250	Totale	Si
54.3	SLE RA 31	0	108.7	10000	250	Totale	Si
65.2	SLE RA 30	0	108.7	10000	250	Totale	Si
54.3	SLE RA 29	0	108.7	10000	250	Totale	Si
65.2	SLE RA 28	0	108.7	10000	250	Totale	Si
61.6	SLE RA 2	0	108.7	10000	350	Variabile	Si
61.6	SLE RA 31	0	108.7	10000	350	Variabile	Si
65.2	SLE RA 30	0	108.7	10000	350	Variabile	Si
61.6	SLE RA 29	0	108.7	10000	350	Variabile	Si
61.6	SLE RA 28	0	108.7	10000	350	Variabile	Si

Frecce lungo Y

Ascissa freccia	Combinazione	Freccia	Luce	L/f	L/f,min	Tipo	Verifica
50.7	SLE RA 1	-0.008	108.7	10000	250	Totale	Si
50.7	SLE RA 31	-0.008	108.7	10000	250	Totale	Si
50.7	SLE RA 30	-0.008	108.7	10000	250	Totale	Si
50.7	SLE RA 29	-0.008	108.7	10000	250	Totale	Si
50.7	SLE RA 28	-0.008	108.7	10000	250	Totale	Si

Ascissa freccia	Combinazione	Freccia	Luce	L/f	L/f,min	Tipo	Verifica
50.7	SLE RA 2	0	108.7	10000	350	Variabile	Si
61.6	SLE RA 31	0	108.7	10000	350	Variabile	Si
61.6	SLE RA 30	0	108.7	10000	350	Variabile	Si
61.6	SLE RA 29	0	108.7	10000	350	Variabile	Si
61.6	SLE RA 28	0	108.7	10000	350	Variabile	Si

Superelemento in acciaio composto dall'asta 123

Caratteristiche del materiale

Acciaio: S275, fyk = 2750

Caratteristiche geometriche

Lunghezza: 74.7
Nodo iniziale: 57 Nodo finale: 85
Cerniera iniziale: No Cerniera finale: No
Sovraresistenza: 0% Sisma Z: No

Caratteristiche della sezione

Sezione	Rotazione	Area	Jx	Jy	ix	iy	Wx	Wy	Wplx	Wply
HEA180	0	45.3	2512.55	924.65	7.45	4.52	293.87	102.74	325.17	156.53

Verifiche di resistenza

Verifiche a forza assiale §4.2.4.1.2.1 - §4.2.4.1.2.2 NTC18

X	Comb.	Sfruttamento	Classe	NEd	Nc,Rd	Nt,Rd	Riduzione da taglio	ρx	ρy	Verifica
0	SLU 132	0.244	1	-28986.6	118634.3		1	0	0	Si

Verifiche a forza assiale SLD §4.2.4.1.2.1 - §4.2.4.1.2.2 NTC18

X	Comb.	Sfruttamento	Classe	NEd	Nc,Rd	Nt,Rd	Riduzione da taglio	ρx	ρy	Verifica
0	SLD 1	0.156	1	-18477.9	118634.3		1	0	0	Si

Verifica a taglio X §4.2.4.1.2.4 NTC18

X	Comb.	Sfruttamento	VEd	Vc,Rd	Av	Interazione taglio-torsione	Riduzione torsione	Verifica
39.8	SLV 5	0.004	-200.5	49149.3	36.18	Considerata	0.9	Si

Verifica a taglio X SLD §4.2.4.1.2.4 NTC18

X	Comb.	Sfruttamento	VEd	Vc,Rd	Av	Interazione taglio-torsione	Riduzione torsione	Verifica
0	SLD 5	0.001	-76.3	52662.2	36.18	Considerata	0.96	Si

Verifica a taglio Y §4.2.4.1.2.4 NTC18

X	Comb.	Sfruttamento	VEd	Vc,Rd	Av	Interazione taglio-torsione	Riduzione torsione	Verifica
74.7	SLU 132	0.198	-4344.3	21950.9	14.52	Considerata	1	Si

Verifica a taglio Y SLD §4.2.4.1.2.4 NTC18

X	Comb.	Sfruttamento	VEd	Vc,Rd	Av	Interazione taglio-torsione	Riduzione torsione	Verifica
74.7	SLD 1	0.15	-3251	21706.6	14.52	Considerata	0.99	Si

Verifica a torsione §4.2.4.1.2.5 NTC18

X	Comb.	Sfruttamento torsione	TEd	TRd	Riduzione taglio resistente	Sfruttamento taglio-torsione	τEd,totale	τRd	Verifica
74.7	SLV 10	0.241	4365.3	18118.1	Considerata				Si

Verifica a torsione SLD §4.2.4.1.2.5 NTC18

X	Comb.	Sfruttamento torsione	TEd	TRd	Riduzione taglio resistente	Sfruttamento taglio-torsione	τEd,totale	τRd	Verifica
74.7	SLD 10	0.092	1658.4	18118.1	Considerata				Si

Verifica a presso/tenso flessione retta X §§ 4.2.4.1.2.3 - 4.2.4.1.2.6 - 4.2.4.1.2.7 - 4.2.4.1.2.8 NTC18

Verifiche eseguite utilizzando la formula conservativa (6.2) §6.2.1 EN 1993-1-1:2005.

X	Comb.	Sfruttamento	Classe	NEd	NRd	Rid. NRd da VEd	Mx,Ed	Mx,Rd	Rid. Mx,Rd da VEd	Rid. Mx,Rd da NEd	ρx	ρy	Verifica
74.7	SLU 132	0.457	1	-25211	118634.3	1	208409	851642	1		0	0	Si

Verifica a presso/tenso flessione retta X SLD §§ 4.2.4.1.2.3 - 4.2.4.1.2.6 - 4.2.4.1.2.7 - 4.2.4.1.2.8 NTC18

Verifiche eseguite utilizzando la formula conservativa (6.2) §6.2.1 EN 1993-1-1:2005.

X	Comb.	Sfruttamento	Classe	NEd	NRd	Rid. NRd da VEd	Mx,Ed	Mx,Rd	Rid. Mx,Rd da VEd	Rid. Mx,Rd da NEd	ρx	ρy	Verifica
59.8	SLD 4	0.27	1	-16154.4	118634.3	1	113627	851642	1		0	0	Si

Verifica a presso/tenso flessione retta Y §§ 4.2.4.1.2.3 - 4.2.4.1.2.6 - 4.2.4.1.2.7 - 4.2.4.1.2.8 NTC18

Verifiche eseguite utilizzando la formula conservativa (6.2) §6.2.1 EN 1993-1-1:2005.

X	Comb.	Sfruttamento	Classe	NEd	NRd	Rid. NRd da VEd	My,Ed	My,Rd	Rid. My,Rd da VEd	Rid. My,Rd da NEd	ρx	ρy	Verifica
19.9	SLV 15	0.132	1	-15048.9	118634.3	1	-2191	409967	1		0	0	Si

Verifica a presso/tenso flessione deviata §§ 4.2.4.1.2.3 - 4.2.4.1.2.6 - 4.2.4.1.2.7 - 4.2.4.1.2.8 NTC18

Verifiche eseguite utilizzando la formula conservativa (6.2) §6.2.1 EN 1993-1-1:2005.

X	Comb.	Sfruttamento	Classe	NEd	NRd	Rid. NRd da VEd	Mx,Ed	Mx,Rd	My,Ed	My,Rd	Rid. Mx,Rd da VEd	Rid. Mx,Rd da NEd	Rid. My,Rd da VEd	Rid. My,Rd da NEd	α	β	ρx	ρy	Verifica
74.7	SLV 2	0.376	1	-16586.3	118634.3	1	199080	851642	-1137	409967	1		1				0	0	Si

Verifica a presso/tenso flessione deviata SLD §§ 4.2.4.1.2.3 - 4.2.4.1.2.6 - 4.2.4.1.2.7 - 4.2.4.1.2.8 NTC18

Verifiche eseguite utilizzando la formula conservativa (6.2) §6.2.1 EN 1993-1-1:2005.

X	Comb.	Sfruttamento	Classe	NEd	NRd	Rid. NRd da VEd	Mx,Ed	Mx,Rd	My,Ed	My,Rd	Rid. Mx,Rd da VEd	Rid. Mx,Rd da NEd	Rid. My,Rd da VEd	Rid. My,Rd da NEd	α	β	ρx	ρy	Verifica
74.7	SLD 1	0.317	1	-15573.6	118634.3	1	157380	851642	-445	409967	1		1				0	0	Si

Verifiche ad instabilità

Caratteristiche iniziali

Membratura principale per controllo snellezza; Calcolo di snellezze ed N critici condotti secondo gli assi principali;
Curva X: b; Curva Y: c; Svergolamento: Carico all'estradosso; Curva svergolamento: b;

Dati per instabilità attorno a x

Numero rit.	Presente	Ascissa	Campata	βx/m	Vincolo a entrambi estremi	λx/m	λVer
1	Si	0					
			1-2	1	Si	10	Si, (<200)
2	Si	74.7					

Dati per instabilità attorno a y

Numero rit.	Presente	Ascissa	Campata	βy/n	k,LT	kw,LT	Vincolo a entrambi estremi	λy/n	λVer
1	Si	0							
			1-2	1	1	1	Si	16.5	Si, (<200)
2	Si	74.7							

Verifica di stabilità per pressoflessione §C.4.2.4.1.3.3.2 NTC18

X	Comb.	Sfruttamento	Classe	NEd	NRk	Mx,Ed max	Mx,Rk	My,Ed max	My,Rk	χ,x	χ,y	kxx	kxy	kyx	kyy	χ,LT	Verifica
0	SLU 99	0.438	1	-28986.6	124566	208409.1	894223.7	39.5	430465.2	1	1	0.516	0.388	0.79	0.647	1	Si

Verifica di stabilità per pressoflessione SLD §C.4.2.4.1.3.3.2 NTC18

X	Comb.	Sfruttamento	Classe	NEd	NRk	Mx,Ed max	Mx,Rk	My,Ed max	My,Rk	χ,x	χ,y	kxx	kxy	kyx	kyy	χ,LT	Verifica
0	SLD 4	0.303	1	-18477.9	124566	157379.9	894223.7	1263.5	430465.2	1	1	0.529	0.275	0.79	0.458	1	Si

Verifica di stabilità a taglio anima Y §4.2.4.1.2.4 [4.2.27] NTC18

η	hw	tw	hw/tw max	Verifica
1.2	15.2	0.6	55.46	Si

Verifica di stabilità a taglio anima Y SLD §4.2.4.1.2.4 [4.2.27] NTC18

η	hw	tw	hw/tw max	Verifica
1.2	15.2	0.6	55.46	Si

Verifiche a deformabilità

Mensola X: No; Mensola Y: No.

Frecce lungo X

Ascissa freccia	Combinazione	Freccia	Luce	L/f	L/f,min	Tipo	Verifica
47.3	SLE RA 1	0	74.7	10000	250	Totale	Si
42.3	SLE RA 31	0	74.7	10000	250	Totale	Si
47.3	SLE RA 30	0	74.7	10000	250	Totale	Si
42.3	SLE RA 29	0	74.7	10000	250	Totale	Si
47.3	SLE RA 28	0	74.7	10000	250	Totale	Si
32.4	SLE RA 2	0	74.7	10000	350	Variabile	Si
37.4	SLE RA 31	0	74.7	10000	350	Variabile	Si
52.3	SLE RA 30	0	74.7	10000	350	Variabile	Si
34.9	SLE RA 29	0	74.7	10000	350	Variabile	Si
52.3	SLE RA 28	0	74.7	10000	350	Variabile	Si

Frecce lungo Y

Ascissa freccia	Combinazione	Freccia	Luce	L/f	L/f,min	Tipo	Verifica
49.8	SLE RA 1	0.003	74.7	10000	250	Totale	Si
47.3	SLE RA 31	0.005	74.7	10000	250	Totale	Si
47.3	SLE RA 30	0.005	74.7	10000	250	Totale	Si
47.3	SLE RA 29	0.005	74.7	10000	250	Totale	Si
47.3	SLE RA 28	0.005	74.7	10000	250	Totale	Si
42.3	SLE RA 2	0	74.7	10000	350	Variabile	Si
42.3	SLE RA 31	0.002	74.7	10000	350	Variabile	Si
42.3	SLE RA 30	0.002	74.7	10000	350	Variabile	Si
42.3	SLE RA 29	0.002	74.7	10000	350	Variabile	Si
42.3	SLE RA 28	0.002	74.7	10000	350	Variabile	Si

Superelemento in acciaio composto dall'asta 124

Caratteristiche del materiale

Acciaio: S275, fyk = 2750

Caratteristiche geometriche

Lunghezza: 74.7

Nodo iniziale: 60 Nodo finale: 86
Cerniera iniziale: No Cerniera finale: No
Sovraresistenza: 0% Sisma Z: No

Caratteristiche della sezione

Sezione	Rotazione	Area	Jx	Jy	ix	iy	Wx	Wy	Wplx	Wply
HEA180	0	45.3	2512.55	924.65	7.45	4.52	293.87	102.74	325.17	156.53

Verifiche di resistenza

Verifiche a forza assiale §4.2.4.1.2.1 - §4.2.4.1.2.2 NTC18

X	Comb.	Sfruttamento	Classe	NEd	Nc,Rd	Nt,Rd	Riduzione da taglio	ρx	ρy	Verifica
0	SLU 132	0.244	1	-28975.4	118634.3		1	0	0	Si

Verifiche a forza assiale SLD §4.2.4.1.2.1 - §4.2.4.1.2.2 NTC18

X	Comb.	Sfruttamento	Classe	NEd	Nc,Rd	Nt,Rd	Riduzione da taglio	ρx	ρy	Verifica
0	SLD 13	0.156	1	-18477.9	118634.3		1	0	0	Si

Verifica a taglio X §4.2.4.1.2.4 NTC18

X	Comb.	Sfruttamento	VEd	Vc,Rd	Av	Interazione taglio-torsione	Riduzione torsione	Verifica
74.7	SLV 10	0.004	200.5	49149.3	36.18	Considerata	0.9	Si

Verifica a taglio X SLD §4.2.4.1.2.4 NTC18

X	Comb.	Sfruttamento	VEd	Vc,Rd	Av	Interazione taglio-torsione	Riduzione torsione	Verifica
0	SLD 9	0.001	76.3	52662.2	36.18	Considerata	0.96	Si

Verifica a taglio Y §4.2.4.1.2.4 NTC18

X	Comb.	Sfruttamento	VEd	Vc,Rd	Av	Interazione taglio-torsione	Riduzione torsione	Verifica
74.7	SLU 132	0.198	-4346.7	21950.9	14.52	Considerata	1	Si

Verifica a taglio Y SLD §4.2.4.1.2.4 NTC18

X	Comb.	Sfruttamento	VEd	Vc,Rd	Av	Interazione taglio-torsione	Riduzione torsione	Verifica
74.7	SLD 14	0.15	-3251	21706.6	14.52	Considerata	0.99	Si

Verifica a torsione §4.2.4.1.2.5 NTC18

X	Comb.	Sfruttamento torsione	TEd	TRd	Riduzione taglio resistente	Sfruttamento taglio-torsione	τEd,totale	τRd	Verifica
39.8	SLV 5	0.241	-4365.3	18118.1	Considerata				Si

Verifica a torsione SLD §4.2.4.1.2.5 NTC18

X	Comb.	Sfruttamento torsione	TEd	TRd	Riduzione taglio resistente	Sfruttamento taglio-torsione	τEd,totale	τRd	Verifica
39.8	SLD 5	0.092	-1658.4	18118.1	Considerata				Si

Verifica a presso/tenso flessione retta X §§ 4.2.4.1.2.3 - 4.2.4.1.2.6 - 4.2.4.1.2.7 - 4.2.4.1.2.8 NTC18

Verifiche eseguite utilizzando la formula conservativa (6.2) §6.2.1 EN 1993-1-1:2005.

X	Comb.	Sfruttamento	Classe	NEd	NRd	Rid. NRd da VEd	Mx,Ed	Mx,Rd	Rid. Mx,Rd da VEd	Rid. Mx,Rd da NEd	ρx	ρy	Verifica
74.7	SLU 99	0.458	1	-25199.9	118634.3	1	208728	851642	1		0	0	Si

Verifica a presso/tenso flessione retta X SLD §§ 4.2.4.1.2.3 - 4.2.4.1.2.6 - 4.2.4.1.2.7 - 4.2.4.1.2.8 NTC18

Verifiche eseguite utilizzando la formula conservativa (6.2) §6.2.1 EN 1993-1-1:2005.

X	Comb.	Sfruttamento	Classe	NEd	NRd	Rid. NRd da VEd	Mx,Ed	Mx,Rd	Rid. Mx,Rd da VEd	Rid. Mx,Rd da NEd	ρx	ρy	Verifica
59.8	SLD 16	0.27	1	-16154.4	118634.3	1	113627	851642	1		0	0	Si

Verifica a presso/tenso flessione retta Y §§ 4.2.4.1.2.3 - 4.2.4.1.2.6 - 4.2.4.1.2.7 - 4.2.4.1.2.8 NTC18

Verifiche eseguite utilizzando la formula conservativa (6.2) §6.2.1 EN 1993-1-1:2005.

X	Comb.	Sfruttamento	Classe	NEd	NRd	Rid. NRd da VEd	My,Ed	My,Rd	Rid. My,Rd da VEd	Rid. My,Rd da NEd	ρx	ρy	Verifica
19.9	SLV 3	0.132	1	-15048.9	118634.3	1	2191	409967	1		0	0	Si

Verifica a presso/tenso flessione deviata §§ 4.2.4.1.2.3 - 4.2.4.1.2.6 - 4.2.4.1.2.7 - 4.2.4.1.2.8 NTC18

Verifiche eseguite utilizzando la formula conservativa (6.2) §6.2.1 EN 1993-1-1:2005.

X	Comb.	Sfruttamento	Classe	NEd	NRd	Rid. NRd da VEd	Mx,Ed	Mx,Rd	My,Ed	My,Rd	Rid. Mx,Rd da VEd	Rid. Mx,Rd da NEd	Rid. My,Rd da VEd	Rid. My,Rd da NEd	α	β	ρx	ρy	Verifica
74.7	SLV 13	0.376	1	-16586.3	118634.3	1	199080	851642	1137	409967	1		1				0	0	Si

Verifica a presso/tenso flessione deviata SLD §§ 4.2.4.1.2.3 - 4.2.4.1.2.6 - 4.2.4.1.2.7 - 4.2.4.1.2.8 NTC18

Verifiche eseguite utilizzando la formula conservativa (6.2) §6.2.1 EN 1993-1-1:2005.

X	Comb.	Sfruttamento	Classe	NEd	NRd	Rid. NRd da VEd	Mx,Ed	Mx,Rd	My,Ed	My,Rd	Rid. Mx,Rd da VEd	Rid. Mx,Rd da NEd	Rid. My,Rd da VEd	Rid. My,Rd da NEd	α	β	ρx	ρy	Verifica
74.7	SLD 13	0.317	1	-15573.6	118634.3	1	157380	851642	445	409967	1		1				0	0	Si

Verifiche ad instabilità

Caratteristiche iniziali

Membratura principale per controllo snellezza; Calcolo di snellezze ed N critici condotti secondo gli assi principali;
Curva X: b; Curva Y: c; Svergolamento: Carico all'estradosso; Curva svergolamento: b;

Dati per instabilità attorno a x

Numero rit.	Presente	Ascissa	Campata	βx/m	Vincolo a entrambi estremi	λx/m	λVer
1	Si	0					
			1-2	1	Si	10	Si, (<200)
2	Si	74.7					

Dati per instabilità attorno a y

Numero rit.	Presente	Ascissa	Campata	βy/n	k,LT	kw,LT	Vincolo a entrambi estremi	λy/n	λVer
1	Si	0							
			1-2	1	1	1	Si	16.5	Si, (<200)
2	Si	74.7							

Verifica di stabilità per pressoflessione §C.4.2.4.1.3.3.2 NTC18

X	Comb.	Sfruttamento	Classe	NEd	NRk	Mx,Ed max	Mx,Rk	My,Ed max	My,Rk	χ,x	χ,y	kxx	kxy	kyx	kyy	χ,LT	Verifica
0	SLU 99	0.438	1	-28975.4	124566	208728.4	894223.7	39.5	430465.2	1	1	0.517	0.388	0.79	0.647	1	Si

Verifica di stabilità per pressoflessione SLD §C.4.2.4.1.3.3.2 NTC18

X	Comb.	Sfruttamento	Classe	NEd	NRk	Mx,Ed max	Mx,Rk	My,Ed max	My,Rk	χ,x	χ,y	kxx	kxy	kyx	kyy	χ,LT	Verifica
0	SLD 15	0.303	1	-18477.9	124566	157379.9	894223.7	1263.5	430465.2	1	1	0.529	0.275	0.79	0.458	1	Si

Verifica di stabilità a taglio anima Y §4.2.4.1.2.4 [4.2.27] NTC18

η	hw	tw	hw/tw max	Verifica
1.2	15.2	0.6	55.46	Si

Verifica di stabilità a taglio anima Y SLD §4.2.4.1.2.4 [4.2.27] NTC18

η	hw	tw	hw/tw max	Verifica
1.2	15.2	0.6	55.46	Si

Verifiche a deformabilità

Mensola X: No; Mensola Y: No.

Frecce lungo X

Ascissa freccia	Combinazione	Freccia	Luce	L/f	L/f,min	Tipo	Verifica
47.3	SLE RA 1	0	74.7	10000	250	Totale	Si
42.3	SLE RA 31	0	74.7	10000	250	Totale	Si
47.3	SLE RA 30	0	74.7	10000	250	Totale	Si
42.3	SLE RA 29	0	74.7	10000	250	Totale	Si
47.3	SLE RA 28	0	74.7	10000	250	Totale	Si
32.4	SLE RA 2	0	74.7	10000	350	Variabile	Si
37.4	SLE RA 31	0	74.7	10000	350	Variabile	Si
52.3	SLE RA 30	0	74.7	10000	350	Variabile	Si
34.9	SLE RA 29	0	74.7	10000	350	Variabile	Si
52.3	SLE RA 28	0	74.7	10000	350	Variabile	Si

Frecce lungo Y

Ascissa freccia	Combinazione	Freccia	Luce	L/f	L/f,min	Tipo	Verifica
49.8	SLE RA 1	0.003	74.7	10000	250	Totale	Si
47.3	SLE RA 31	0.005	74.7	10000	250	Totale	Si
47.3	SLE RA 30	0.005	74.7	10000	250	Totale	Si
47.3	SLE RA 29	0.005	74.7	10000	250	Totale	Si
47.3	SLE RA 28	0.005	74.7	10000	250	Totale	Si
42.3	SLE RA 2	0	74.7	10000	350	Variabile	Si
42.3	SLE RA 31	0.002	74.7	10000	350	Variabile	Si
42.3	SLE RA 30	0.002	74.7	10000	350	Variabile	Si
42.3	SLE RA 29	0.002	74.7	10000	350	Variabile	Si
42.3	SLE RA 28	0.002	74.7	10000	350	Variabile	Si

Superelemento in acciaio composto dall'asta 125

Caratteristiche del materiale

Acciaio: S275, fyk = 2750

Caratteristiche geometriche

Lunghezza: 78.5
Nodo iniziale: 85 Nodo finale: 107
Cerniera iniziale: No Cerniera finale: No
Sovraresistenza: 0% Sisma Z: No

Caratteristiche della sezione

Sezione	Rotazione	Area	Jx	Jy	ix	iy	Wx	Wy	Wplx	Wply
HEA180	0	45.3	2512.55	924.65	7.45	4.52	293.87	102.74	325.17	156.53

Verifiche di resistenza

Verifiche a forza assiale §4.2.4.1.2.1 - §4.2.4.1.2.2 NTC18

X	Comb.	Sfruttamento	Classe	NEd	Nc,Rd	Nt,Rd	Riduzione da taglio	ρx	ρy	Verifica
0	SLU 132	0.218	1	-25851.4	118634.3		1	0	0	Si

Verifiche a forza assiale SLD §4.2.4.1.2.1 - §4.2.4.1.2.2 NTC18

X	Comb.	Sfruttamento	Classe	NEd	Nc,Rd	Nt,Rd	Riduzione da taglio	ρx	ρy	Verifica
0	SLD 1	0.134	1	-15955.9	118634.3		1	0	0	Si

Verifica a taglio X §4.2.4.1.2.4 NTC18

X	Comb.	Sfruttamento	VEd	Vc,Rd	Av	Interazione taglio-torsione	Riduzione torsione	Verifica
78.5	SLV 8	0.002	107	50012.4	36.18	Considerata	0.91	Si

Verifica a taglio X SLD §4.2.4.1.2.4 NTC18

X	Comb.	Sfruttamento	VEd	Vc,Rd	Av	Interazione taglio-torsione	Riduzione torsione	Verifica
78.5	SLD 8	0.001	40.8	52972.5	36.18	Considerata	0.97	Si

Verifica a taglio Y §4.2.4.1.2.4 NTC18

X	Comb.	Sfruttamento	VEd	Vc,Rd	Av	Interazione taglio-torsione	Riduzione torsione	Verifica
0	SLU 131	0.11	2418.9	21950.9	14.52	Considerata	1	Si

Verifica a taglio Y SLD §4.2.4.1.2.4 NTC18

X	Comb.	Sfruttamento	VEd	Vc,Rd	Av	Interazione taglio-torsione	Riduzione torsione	Verifica
0	SLD 11	0.074	1576.6	21256.4	14.52	Considerata	0.97	Si

Verifica a torsione §4.2.4.1.2.5 NTC18

X	Comb.	Sfruttamento torsione	TEd	TRd	Riduzione taglio resistente	Sfruttamento taglio-torsione	τEd,totale	τRd	Verifica
36.6	SLV 12	0.205	-3717.5	18118.1	Considerata				Si

Verifica a torsione SLD §4.2.4.1.2.5 NTC18

X	Comb.	Sfruttamento torsione	TEd	TRd	Riduzione taglio resistente	Sfruttamento taglio-torsione	τEd,totale	τRd	Verifica
36.6	SLD 12	0.078	-1410.3	18118.1	Considerata				Si

Verifica a presso/tenso flessione retta X §§ 4.2.4.1.2.3 - 4.2.4.1.2.6 - 4.2.4.1.2.7 - 4.2.4.1.2.8 NTC18

Verifiche eseguite utilizzando la formula conservativa (6.2) §6.2.1 EN 1993-1-1:2005.

X	Comb.	Sfruttamento	Classe	NEd	NRd	Rid. NRd da VEd	Mx,Ed	Mx,Rd	Rid. Mx,Rd da VEd	Rid. Mx,Rd da NEd	ρx	ρy	Verifica
0	SLU 131	0.463	1	-25850.6	118634.3	1	208403	851642	1		0	0	Si

Verifica a presso/tenso flessione deviata §§ 4.2.4.1.2.3 - 4.2.4.1.2.6 - 4.2.4.1.2.7 - 4.2.4.1.2.8 NTC18

Verifiche eseguite utilizzando la formula conservativa (6.2) §6.2.1 EN 1993-1-1:2005.

X	Comb.	Sfruttamento	Classe	NEd	NRd	Rid. NRd da VEd	Mx,Ed	Mx,Rd	My,Ed	My,Rd	Rid. Mx,Rd da VEd	Rid. Mx,Rd da NEd	Rid. My,Rd da VEd	Rid. My,Rd da NEd	α	β	ρx	ρy	Verifica
0	SLV 1	0.378	1	-16756.8	118634.3	1	199059	851642	-1196	409967	1		1				0	0	Si

Verifica a presso/tenso flessione deviata SLD §§ 4.2.4.1.2.3 - 4.2.4.1.2.6 - 4.2.4.1.2.7 - 4.2.4.1.2.8 NTC18

Verifiche eseguite utilizzando la formula conservativa (6.2) §6.2.1 EN 1993-1-1:2005.

X	Comb.	Sfruttamento	Classe	NEd	NRd	Rid. NRd da VEd	Mx,Ed	Mx,Rd	My,Ed	My,Rd	Rid. Mx,Rd da VEd	Rid. Mx,Rd da NEd	Rid. My,Rd da VEd	Rid. My,Rd da NEd	α	β	ρx	ρy	Verifica
0	SLD 1	0.32	1	-15955.9	118634.3	1	157378	851642	-467	409967	1		1				0	0	Si

Verifiche ad instabilità

Caratteristiche iniziali

Membratura principale per controllo snellezza; Calcolo di snellezze ed N critici condotti secondo gli assi principali;
Curva X: b; Curva Y: c; Svergolamento: Carico all'estradosso; Curva svergolamento: b;

Dati per instabilità attorno a x

Numero rit.	Presente	Ascissa	Campata	βx/m	Vincolo a entrambi estremi	λx/m	λVer
1	Si	0					
			1-2	1	Si	10.5	Si, (<200)
2	Si	78.5					

Dati per instabilità attorno a y

Numero rit.	Presente	Ascissa	Campata	βy/n	k,LT	kw,LT	Vincolo a entrambi estremi	λy/n	λVer
1	Si	0							
			1-2	1	1	1	Si	17.4	Si, (<200)
2	Si	78.5							

Verifica di stabilità per pressoflessione §C.4.2.4.1.3.3.2 NTC18

X	Comb.	Sfruttamento	Classe	NEd	NRk	Mx,Ed max	Mx,Rk	My,Ed max	My,Rk	χ,x	χ,y	kxx	kxy	kyx	kyy	χ,LT	Verifica
0	SLU 132	0.414	1	-25851.4	124566	208395.7	894223.7	38.1	430465.2	1	1	0.727	0.301	0.8	0.502	1	Si

Verifica di stabilità per pressoflessione SLD §C.4.2.4.1.3.3.2 NTC18

X	Comb.	Sfruttamento	Classe	NEd	NRk	Mx,Ed max	Mx,Rk	My,Ed max	My,Rk	χ,x	χ,y	kxx	kxy	kyx	kyy	χ,LT	Verifica
0	SLD 1	0.285	1	-15955.9	124566	157377.5	894223.7	1393.1	430465.2	1	1	0.788	0.429	0.8	0.714	1	Si

Verifica di stabilità a taglio anima Y §4.2.4.1.2.4 [4.2.27] NTC18

η	hw	tw	hw/tw max	Verifica
1.2	15.2	0.6	55.46	Si

Verifica di stabilità a taglio anima Y SLD §4.2.4.1.2.4 [4.2.27] NTC18

η	hw	tw	hw/tw max	Verifica
1.2	15.2	0.6	55.46	Si

Verifiche a deformabilità

Mensola X: No; Mensola Y: No.

Frecce lungo X

Ascissa freccia	Combinazione	Freccia	Luce	L/f	L/f,min	Tipo	Verifica
31.4	SLE RA 1	0	78.5	10000	250	Totale	Si
31.4	SLE RA 31	0	78.5	10000	250	Totale	Si
31.4	SLE RA 30	0	78.5	10000	250	Totale	Si
31.4	SLE RA 29	0	78.5	10000	250	Totale	Si
31.4	SLE RA 28	0	78.5	10000	250	Totale	Si
34	SLE RA 2	0	78.5	10000	350	Variabile	Si
31.4	SLE RA 31	0	78.5	10000	350	Variabile	Si
31.4	SLE RA 30	0	78.5	10000	350	Variabile	Si
31.4	SLE RA 29	0	78.5	10000	350	Variabile	Si
31.4	SLE RA 28	0	78.5	10000	350	Variabile	Si

Frecce lungo Y

Ascissa freccia	Combinazione	Freccia	Luce	L/f	L/f,min	Tipo	Verifica
36.6	SLE RA 33	0.013	78.5	5956.8	250	Totale	Si
36.6	SLE RA 32	0.013	78.5	5957.1	250	Totale	Si
36.6	SLE RA 25	0.013	78.5	6031.5	250	Totale	Si
36.6	SLE RA 24	0.013	78.5	6031.8	250	Totale	Si
36.6	SLE RA 21	0.013	78.5	6059.4	250	Totale	Si
49.7	SLE RA 2	0	78.5	10000	350	Variabile	Si
36.6	SLE RA 31	0.003	78.5	10000	350	Variabile	Si
36.6	SLE RA 30	0.003	78.5	10000	350	Variabile	Si
36.6	SLE RA 29	0.002	78.5	10000	350	Variabile	Si
36.6	SLE RA 28	0.002	78.5	10000	350	Variabile	Si

Superelemento in acciaio composto dall'asta 126

Caratteristiche del materiale

Acciaio: S275, fyk = 2750

Caratteristiche geometriche

Lunghezza: 78.5
Nodo iniziale: 86 Nodo finale: 108
Cerniera iniziale: No Cerniera finale: No
Sovraresistenza: 0% Sisma Z: No

Caratteristiche della sezione

Sezione	Rotazione	Area	Jx	Jy	ix	iy	Wx	Wy	Wplx	Wply
HEA180	0	45.3	2512.55	924.65	7.45	4.52	293.87	102.74	325.17	156.53

Verifiche di resistenza

Verifiche a forza assiale §4.2.4.1.2.1 - §4.2.4.1.2.2 NTC18

X	Comb.	Sfruttamento	Classe	NEd	Nc,Rd	Nt,Rd	Riduzione da taglio	ρx	ρy	Verifica
0	SLU 99	0.218	1	-25846.5	118634.3		1	0	0	Si

Verifiche a forza assiale SLD §4.2.4.1.2.1 - §4.2.4.1.2.2 NTC18

X	Comb.	Sfruttamento	Classe	NEd	Nc,Rd	Nt,Rd	Riduzione da taglio	ρx	ρy	Verifica
0	SLD 13	0.134	1	-15955.9	118634.3		1	0	0	Si

Verifica a taglio X §4.2.4.1.2.4 NTC18

X	Comb.	Sfruttamento	VEd	Vc,Rd	Av	Interazione taglio-torsione	Riduzione torsione	Verifica
78.5	SLV 12	0.002	-107	50012.4	36.18	Considerata	0.91	Si

Verifica a taglio X SLD §4.2.4.1.2.4 NTC18

X	Comb.	Sfruttamento	VEd	Vc,Rd	Av	Interazione taglio-torsione	Riduzione torsione	Verifica
78.5	SLD 12	0.001	-40.8	52972.5	36.18	Considerata	0.97	Si

Verifica a taglio Y §4.2.4.1.2.4 NTC18

X	Comb.	Sfruttamento	VEd	Vc,Rd	Av	Interazione taglio-torsione	Riduzione torsione	Verifica
0	SLU 131	0.11	2407	21950.9	14.52	Considerata	1	Si

Verifica a taglio Y SLD §4.2.4.1.2.4 NTC18

X	Comb.	Sfruttamento	VEd	Vc,Rd	Av	Interazione taglio-torsione	Riduzione torsione	Verifica
0	SLD 8	0.074	1576.6	21256.4	14.52	Considerata	0.97	Si

Verifica a torsione §4.2.4.1.2.5 NTC18

X	Comb.	Sfruttamento torsione	TEd	TRd	Riduzione taglio resistente	Sfruttamento taglio-torsione	τEd,totale	τRd	Verifica
78.5	SLV 8	0.205	3717.5	18118.1	Considerata				Si

Verifica a torsione SLD §4.2.4.1.2.5 NTC18

X	Comb.	Sfruttamento torsione	TEd	TRd	Riduzione taglio resistente	Sfruttamento taglio-torsione	τEd,totale	τRd	Verifica
78.5	SLD 8	0.078	1410.3	18118.1	Considerata				Si

Verifica a presso/tenso flessione retta X §§ 4.2.4.1.2.3 - 4.2.4.1.2.6 - 4.2.4.1.2.7 - 4.2.4.1.2.8 NTC18

Verifiche eseguite utilizzando la formula conservativa (6.2) §6.2.1 EN 1993-1-1:2005.

X	Comb.	Sfruttamento	Classe	NEd	NRd	Rid. NRd da VEd	Mx,Ed	Mx,Rd	Rid. Mx,Rd da VEd	Rid. Mx,Rd da NEd	ρx	ρy	Verifica
0	SLU 131	0.463	1	-25845.6	118634.3	1	208721	851642	1		0	0	Si

Verifica a presso/tenso flessione deviata §§ 4.2.4.1.2.3 - 4.2.4.1.2.6 - 4.2.4.1.2.7 - 4.2.4.1.2.8 NTC18

Verifiche eseguite utilizzando la formula conservativa (6.2) §6.2.1 EN 1993-1-1:2005.

X	Comb.	Sfruttamento	Classe	NEd	NRd	Rid. NRd da VEd	Mx,Ed	Mx,Rd	My,Ed	My,Rd	Rid. Mx,Rd da VEd	Rid. Mx,Rd da NEd	Rid. My,Rd da VEd	Rid. My,Rd da NEd	α	β	ρx	ρy	Verifica
0	SLV 13	0.378	1	-16756.8	118634.3	1	199059	851642	1196	409967	1		1				0	0	Si

Verifica a presso/tenso flessione deviata SLD §§ 4.2.4.1.2.3 - 4.2.4.1.2.6 - 4.2.4.1.2.7 - 4.2.4.1.2.8 NTC18

Verifiche eseguite utilizzando la formula conservativa (6.2) §6.2.1 EN 1993-1-1:2005.

X	Comb.	Sfruttamento	Classe	NEd	NRd	Rid. NRd da VEd	Mx,Ed	Mx,Rd	My,Ed	My,Rd	Rid. Mx,Rd da VEd	Rid. Mx,Rd da NEd	Rid. My,Rd da VEd	Rid. My,Rd da NEd	α	β	ρx	ρy	Verifica
0	SLD 13	0.32	1	-15955.9	118634.3	1	157378	851642	467	409967	1		1				0	0	Si

Verifiche ad instabilità

Caratteristiche iniziali

Membratura principale per controllo snellezza; Calcolo di snellezze ed N critici condotti secondo gli assi principali;
Curva X: b; Curva Y: c; Svergolamento: Carico all'estradosso; Curva svergolamento: b;

Dati per instabilità attorno a x

Numero rit.	Presente	Ascissa	Campata	βx/m	Vincolo a entrambi estremi	λx/m	λVer
1	Si	0					
			1-2	1	Si	10.5	Si, (<200)
2	Si	78.5					

Dati per instabilità attorno a y

Numero rit.	Presente	Ascissa	Campata	βy/n	k,LT	kw,LT	Vincolo a entrambi estremi	λy/n	λVer
1	Si	0							
			1-2	1	1	1	Si	17.4	Si, (<200)
2	Si	78.5							

Verifica di stabilità per pressoflessione §C.4.2.4.1.3.3.2 NTC18

X	Comb.	Sfruttamento	Classe	NEd	NRk	Mx,Ed max	Mx,Rk	My,Ed max	My,Rk	χ,x	χ,y	kxx	kxy	kyx	kyy	χ,LT	Verifica
0	SLU 99	0.414	1	-25846.5	124566	208714.5	894223.7	38.1	430465.2	1	1	0.729	0.301	0.8	0.502	1	Si

Verifica di stabilità per pressoflessione SLD §C.4.2.4.1.3.3.2 NTC18

X	Comb.	Sfruttamento	Classe	NEd	NRk	Mx,Ed max	Mx,Rk	My,Ed max	My,Rk	χ,x	χ,y	kxx	kxy	kyx	kyy	χ,LT	Verifica
0	SLD 14	0.285	1	-15955.9	124566	157377.5	894223.7	1393.1	430465.2	1	1	0.788	0.429	0.8	0.714	1	Si

Verifica di stabilità a taglio anima Y §4.2.4.1.2.4 [4.2.27] NTC18

η	hw	tw	hw/tw max	Verifica
1.2	15.2	0.6	55.46	Si

Verifica di stabilità a taglio anima Y SLD §4.2.4.1.2.4 [4.2.27] NTC18

η	hw	tw	hw/tw max	Verifica
1.2	15.2	0.6	55.46	Si

Verifiche a deformabilità

Mensola X: No; Mensola Y: No.

Frecce lungo X

Ascissa freccia	Combinazione	Freccia	Luce	L/f	L/f,min	Tipo	Verifica
31.4	SLE RA 1	0	78.5	10000	250	Totale	Si
31.4	SLE RA 31	0	78.5	10000	250	Totale	Si
31.4	SLE RA 30	0	78.5	10000	250	Totale	Si
31.4	SLE RA 29	0	78.5	10000	250	Totale	Si
31.4	SLE RA 28	0	78.5	10000	250	Totale	Si
34	SLE RA 2	0	78.5	10000	350	Variabile	Si
31.4	SLE RA 31	0	78.5	10000	350	Variabile	Si
31.4	SLE RA 30	0	78.5	10000	350	Variabile	Si
31.4	SLE RA 29	0	78.5	10000	350	Variabile	Si
31.4	SLE RA 28	0	78.5	10000	350	Variabile	Si

Frecce lungo Y

Ascissa freccia	Combinazione	Freccia	Luce	L/f	L/f,min	Tipo	Verifica
36.6	SLE RA 33	0.013	78.5	5923.1	250	Totale	Si
36.6	SLE RA 32	0.013	78.5	5923.4	250	Totale	Si
36.6	SLE RA 25	0.013	78.5	6006.9	250	Totale	Si
36.6	SLE RA 24	0.013	78.5	6007.2	250	Totale	Si
36.6	SLE RA 21	0.013	78.5	6041.4	250	Totale	Si
49.7	SLE RA 2	0	78.5	10000	350	Variabile	Si
36.6	SLE RA 31	0.003	78.5	10000	350	Variabile	Si
36.6	SLE RA 30	0.003	78.5	10000	350	Variabile	Si
36.6	SLE RA 29	0.002	78.5	10000	350	Variabile	Si
36.6	SLE RA 28	0.002	78.5	10000	350	Variabile	Si

Superelemento in acciaio composto dall'asta 127

Caratteristiche del materiale

Acciaio: S275, fyk = 2750

Caratteristiche geometriche

Lunghezza: 170.7
Nodo iniziale: 108 Nodo finale: 121
Cerniera iniziale: No Cerniera finale: No
Sovraresistenza: 0% Sisma Z: No

Caratteristiche della sezione

Sezione	Rotazione	Area	Jx	Jy	ix	iy	Wx	Wy	Wplx	Wply
HEA180	0	45.3	2512.55	924.65	7.45	4.52	293.87	102.74	325.17	156.53

Verifiche di resistenza

Verifiche a forza assiale §4.2.4.1.2.1 - §4.2.4.1.2.2 NTC18

X	Comb.	Sfruttamento	Classe	NEd	Nc,Rd	Nt,Rd	Riduzione da taglio	ρx	ρy	Verifica
0	SLU 99	0.2	1	-23689.9	118634.3		1	0	0	Si

Verifiche a forza assiale SLD §4.2.4.1.2.1 - §4.2.4.1.2.2 NTC18

X	Comb.	Sfruttamento	Classe	NEd	Nc,Rd	Nt,Rd	Riduzione da taglio	ρx	ρy	Verifica
0	SLD 14	0.12	1	-14285.7	118634.3		1	0	0	Si

Verifica a taglio X §4.2.4.1.2.4 NTC18

X	Comb.	Sfruttamento	VEd	Vc,Rd	Av	Interazione taglio-torsione	Riduzione torsione	Verifica
5.7	SLV 8	0.001	63.1	54408.4	36.18	Considerata	0.99	Si

Verifica a taglio Y §4.2.4.1.2.4 NTC18

X	Comb.	Sfruttamento	VEd	Vc,Rd	Av	Interazione taglio-torsione	Riduzione torsione	Verifica
0	SLU 131	0.219	4815.9	21950.9	14.52	Considerata	1	Si

Verifica a taglio Y SLD §4.2.4.1.2.4 NTC18

X	Comb.	Sfruttamento	VEd	Vc,Rd	Av	Interazione taglio-torsione	Riduzione torsione	Verifica
0	SLD 16	0.161	3522.2	21937.3	14.52	Considerata	1	Si

Verifica a torsione §4.2.4.1.2.5 NTC18

X	Comb.	Sfruttamento torsione	TEd	TRd	Riduzione taglio resistente	Sfruttamento taglio-torsione	τEd,totale	τRd	Verifica
170.7	SLV 8	0.013	243.4	18118.1	Considerata				Si

Verifica a torsione SLD §4.2.4.1.2.5 NTC18

X	Comb.	Sfruttamento torsione	TEd	TRd	Riduzione taglio resistente	Sfruttamento taglio-torsione	τEd,totale	τRd	Verifica
170.7	SLD 8	0.005	92.5	18118.1	Considerata				Si

Verifica a presso/tenso flessione retta X §§ 4.2.4.1.2.3 - 4.2.4.1.2.6 - 4.2.4.1.2.7 - 4.2.4.1.2.8 NTC18

Verifiche eseguite utilizzando la formula conservativa (6.2) §6.2.1 EN 1993-1-1:2005.

X	Comb.	Sfruttamento	Classe	NEd	NRd	Rid. NRd da VEd	Mx,Ed	Mx,Rd	Rid. Mx,Rd da VEd	Rid. Mx,Rd da NEd	ρx	ρy	Verifica
130.9	SLU 132	0.411	1	-23116.7	118634.3	1	-183806	851642	1		0	0	Si

Verifica a presso/tenso flessione retta Y SLD §§ 4.2.4.1.2.3 - 4.2.4.1.2.6 - 4.2.4.1.2.7 - 4.2.4.1.2.8 NTC18

Verifiche eseguite utilizzando la formula conservativa (6.2) §6.2.1 EN 1993-1-1:2005.

X	Comb.	Sfruttamento	Classe	NEd	NRd	Rid. NRd da VEd	My,Ed	My,Rd	Rid. My,Rd da VEd	Rid. My,Rd da NEd	ρx	ρy	Verifica
17.1	SLD 3	0.119	1	-13714.2	118634.3	1	-1341	409967	1		0	0	Si

Verifica a presso/tenso flessione deviata §§ 4.2.4.1.2.3 - 4.2.4.1.2.6 - 4.2.4.1.2.7 - 4.2.4.1.2.8 NTC18

Verifiche eseguite utilizzando la formula conservativa (6.2) §6.2.1 EN 1993-1-1:2005.

X	Comb.	Sfruttamento	Classe	NEd	NRd	Rid. NRd da VEd	Mx,Ed	Mx,Rd	My,Ed	My,Rd	Rid. Mx,Rd da VEd	Rid. Mx,Rd da NEd	Rid. My,Rd da VEd	Rid. My,Rd da NEd	α	β	ρx	ρy	Verifica
0	SLV 15	0.323	1	-14602.7	118634.3	1	162094	851642	-3853	409967	1		1				0	0	Si

Verifica a presso/tenso flessione deviata SLD §§ 4.2.4.1.2.3 - 4.2.4.1.2.6 - 4.2.4.1.2.7 - 4.2.4.1.2.8 NTC18

Verifiche eseguite utilizzando la formula conservativa (6.2) §6.2.1 EN 1993-1-1:2005.

X	Comb.	Sfruttamento	Classe	NEd	NRd	Rid. NRd da VEd	Mx,Ed	Mx,Rd	My,Ed	My,Rd	Rid. Mx,Rd da VEd	Rid. Mx,Rd da NEd	Rid. My,Rd da VEd	Rid. My,Rd da NEd	α	β	ρx	ρy	Verifica
0	SLD 16	0.264	1	-14285.6	118634.3	1	118950	851642	-1463	409967	1		1				0	0	Si

Verifiche ad instabilità

Caratteristiche iniziali

Membratura principale per controllo snellezza; Calcolo di snellezze ed N critici condotti secondo gli assi principali;
Curva X: b; Curva Y: c; Svergolamento: Carico all'estradosso; Curva svergolamento: b;

Dati per instabilità attorno a x

Numero rit.	Presente	Ascissa	Campata	βx/m	Vincolo a entrambi estremi	λx/m	λVer
1	Si	0					
			1-2	1	Si	22.9	Si, (<200)
2	Si	170.7					

Dati per instabilità attorno a y

Numero rit.	Presente	Ascissa	Campata	βy/n	k,LT	kw,LT	Vincolo a entrambi estremi	λy/n	λVer
1	Si	0							
			1-2	1	1	1	Si	37.8	Si, (<200)
2	Si	170.7							

Verifica di stabilità per pressoflessione §C.4.2.4.1.3.3.2 NTC18

X	Comb.	Sfruttamento	Classe	NEd	NRk	Mx,Ed max	Mx,Rk	My,Ed max	My,Rk	χ,x	χ,y	kxx	kxy	kyx	kyy	χ,LT	Verifica
0	SLU 99	0.445	1	-23689.9	124566	183805.6	894223.7	7.5	430465.2	0.977	0.879	0.984	0.503	0.986	0.838	0.978	Si

Verifica di stabilità per pressoflessione SLD §C.4.2.4.1.3.3.2 NTC18

X	Comb.	Sfruttamento	Classe	NEd	NRk	Mx,Ed max	Mx,Rk	My,Ed max	My,Rk	χ,x	χ,y	kxx	kxy	kyx	kyy	χ,LT	Verifica
0	SLD 15	0.28	1	-14285.6	124566	118950	894223.7	1463.1	430465.2	0.977	0.879	0.683	0.414	0.986	0.689	0.978	Si

Verifica di stabilità a taglio anima Y §4.2.4.1.2.4 [4.2.27] NTC18

η	hw	tw	hw/tw max	Verifica
1.2	15.2	0.6	55.46	Si

Verifica di stabilità a taglio anima Y SLD §4.2.4.1.2.4 [4.2.27] NTC18

η	hw	tw	hw/tw max	Verifica
1.2	15.2	0.6	55.46	Si

Verifiche a deformabilità

Mensola X: No; Mensola Y: No.

Frecce lungo X

Ascissa freccia	Combinazione	Freccia	Luce	L/f	L/f,min	Tipo	Verifica
79.6	SLE RA 1	0	170.7	10000	250	Totale	Si
79.6	SLE RA 31	0	170.7	10000	250	Totale	Si
79.6	SLE RA 30	0	170.7	10000	250	Totale	Si
79.6	SLE RA 29	0	170.7	10000	250	Totale	Si
79.6	SLE RA 28	0	170.7	10000	250	Totale	Si
96.7	SLE RA 2	0	170.7	10000	350	Variabile	Si
74	SLE RA 31	0	170.7	10000	350	Variabile	Si
74	SLE RA 30	0	170.7	10000	350	Variabile	Si
74	SLE RA 29	0	170.7	10000	350	Variabile	Si
74	SLE RA 28	0	170.7	10000	350	Variabile	Si

Frecce lungo Y

Ascissa freccia	Combinazione	Freccia	Luce	L/f	L/f,min	Tipo	Verifica
96.7	SLE RA 33	-0.079	170.7	2153.3	250	Totale	Si
96.7	SLE RA 32	-0.079	170.7	2153.5	250	Totale	Si
96.7	SLE RA 25	-0.079	170.7	2173.7	250	Totale	Si
96.7	SLE RA 24	-0.079	170.7	2173.8	250	Totale	Si
96.7	SLE RA 21	-0.078	170.7	2182.9	250	Totale	Si
74	SLE RA 2	0	170.7	10000	350	Variabile	Si
108.1	SLE RA 31	-0.01	170.7	10000	350	Variabile	Si
108.1	SLE RA 30	-0.01	170.7	10000	350	Variabile	Si
108.1	SLE RA 29	-0.009	170.7	10000	350	Variabile	Si
108.1	SLE RA 28	-0.009	170.7	10000	350	Variabile	Si

Superelemento in acciaio composto dall'asta 128

Caratteristiche del materiale

Acciaio: S275, fyk = 2750

Caratteristiche geometriche

Lunghezza: 170.7
Nodo iniziale: 107 Nodo finale: 121
Cerniera iniziale: No Cerniera finale: No
Sovraresistenza: 0% Sisma Z: No

Caratteristiche della sezione

Sezione	Rotazione	Area	Jx	Jy	ix	iy	Wx	Wy	Wplx	Wply
HEA180	0	45.3	2512.55	924.65	7.45	4.52	293.87	102.74	325.17	156.53

Verifiche di resistenza

Verifiche a forza assiale §4.2.4.1.2.1 - §4.2.4.1.2.2 NTC18

X	Comb.	Sfruttamento	Classe	NEd	Nc,Rd	Nt,Rd	Riduzione da taglio	ρx	ρy	Verifica
0	SLU 99	0.2	1	-23689	118634.3		1	0	0	Si

Verifiche a forza assiale SLD §4.2.4.1.2.1 - §4.2.4.1.2.2 NTC18

X	Comb.	Sfruttamento	Classe	NEd	Nc,Rd	Nt,Rd	Riduzione da taglio	ρx	ρy	Verifica
0	SLD 1	0.12	1	-14285.7	118634.3		1	0	0	Si

Verifica a taglio X §4.2.4.1.2.4 NTC18

X	Comb.	Sfruttamento	VEd	Vc,Rd	Av	Interazione taglio-torsione	Riduzione torsione	Verifica
0	SLV 11	0.001	-63.1	54408.4	36.18	Considerata	0.99	Si

Verifica a taglio Y §4.2.4.1.2.4 NTC18

X	Comb.	Sfruttamento	VEd	Vc,Rd	Av	Interazione taglio-torsione	Riduzione torsione	Verifica
0	SLU 98	0.219	4808.6	21950.9	14.52	Considerata	1	Si

Verifica a taglio Y SLD §4.2.4.1.2.4 NTC18

X	Comb.	Sfruttamento	VEd	Vc,Rd	Av	Interazione taglio-torsione	Riduzione torsione	Verifica
0	SLD 4	0.161	3522.2	21937.3	14.52	Considerata	1	Si

Verifica a torsione §4.2.4.1.2.5 NTC18

X	Comb.	Sfruttamento torsione	TEd	TRd	Riduzione taglio resistente	Sfruttamento taglio-torsione	τEd,totale	τRd	Verifica
79.6	SLV 12	0.013	-243.4	18118.1	Considerata				Si

Verifica a torsione SLD §4.2.4.1.2.5 NTC18

X	Comb.	Sfruttamento torsione	TEd	TRd	Riduzione taglio resistente	Sfruttamento taglio-torsione	τEd,totale	τRd	Verifica
79.6	SLD 12	0.005	-92.5	18118.1	Considerata				Si

Verifica a presso/tenso flessione retta X §§ 4.2.4.1.2.3 - 4.2.4.1.2.6 - 4.2.4.1.2.7 - 4.2.4.1.2.8 NTC18

Verifiche eseguite utilizzando la formula conservativa (6.2) §6.2.1 EN 1993-1-1:2005.

X	Comb.	Sfruttamento	Classe	NEd	NRd	Rid. NRd da VEd	Mx,Ed	Mx,Rd	Rid. Mx,Rd da VEd	Rid. Mx,Rd da NEd	ρx	ρy	Verifica
130.9	SLU 99	0.411	1	-23115.8	118634.3	1	-184097	851642	1		0	0	Si

Verifica a presso/tenso flessione retta Y SLD §§ 4.2.4.1.2.3 - 4.2.4.1.2.6 - 4.2.4.1.2.7 - 4.2.4.1.2.8 NTC18

Verifiche eseguite utilizzando la formula conservativa (6.2) §6.2.1 EN 1993-1-1:2005.

X	Comb.	Sfruttamento	Classe	NEd	NRd	Rid. NRd da VEd	My,Ed	My,Rd	Rid. My,Rd da VEd	Rid. My,Rd da NEd	ρx	ρy	Verifica
17.1	SLD 15	0.119	1	-13714.2	118634.3	1	1341	409967	1		0	0	Si

Verifica a presso/tenso flessione deviata §§ 4.2.4.1.2.3 - 4.2.4.1.2.6 - 4.2.4.1.2.7 - 4.2.4.1.2.8 NTC18

Verifiche eseguite utilizzando la formula conservativa (6.2) §6.2.1 EN 1993-1-1:2005.

X	Comb.	Sfruttamento	Classe	NEd	NRd	Rid. NRd da VEd	Mx,Ed	Mx,Rd	My,Ed	My,Rd	Rid. Mx,Rd da VEd	Rid. Mx,Rd da NEd	Rid. My,Rd da VEd	Rid. My,Rd da NEd	α	β	ρx	ρy	Verifica
0	SLV 3	0.323	1	-14602.7	118634.3	1	162094	851642	3853	409967	1		1				0	0	Si

Verifica a presso/tenso flessione deviata SLD §§ 4.2.4.1.2.3 - 4.2.4.1.2.6 - 4.2.4.1.2.7 - 4.2.4.1.2.8 NTC18

Verifiche eseguite utilizzando la formula conservativa (6.2) §6.2.1 EN 1993-1-1:2005.

X	Comb.	Sfruttamento	Classe	NEd	NRd	Rid. NRd da VEd	Mx,Ed	Mx,Rd	My,Ed	My,Rd	Rid. Mx,Rd da VEd	Rid. Mx,Rd da NEd	Rid. My,Rd da VEd	Rid. My,Rd da NEd	α	β	ρx	ρy	Verifica
0	SLD 4	0.264	1	-14285.6	118634.3	1	118950	851642	1463	409967	1		1				0	0	Si

Verifiche ad instabilità

Caratteristiche iniziali

Membratura principale per controllo snellezza; Calcolo di snellezze ed N critici condotti secondo gli assi principali;
Curva X: b; Curva Y: c; Svergolamento: Carico all'estradosso; Curva svergolamento: b;

Dati per instabilità attorno a x

Numero rit.	Presente	Ascissa	Campata	βx/m	Vincolo a entrambi estremi	λx/m	λVer
1	Si	0					
			1-2	1	Si	22.9	Si, (<200)
2	Si	170.7					

Dati per instabilità attorno a y

Numero rit.	Presente	Ascissa	Campata	βy/n	k,LT	kw,LT	Vincolo a entrambi estremi	λy/n	λVer
1	Si	0							
			1-2	1	1	1	Si	37.8	Si, (<200)
2	Si	170.7							

Verifica di stabilità per pressoflessione §C.4.2.4.1.3.3.2 NTC18

X	Comb.	Sfruttamento	Classe	NEd	NRk	Mx,Ed max	Mx,Rk	My,Ed max	My,Rk	χ,x	χ,y	kxx	kxy	kyx	kyy	χ,LT	Verifica
0	SLU 99	0.445	1	-23689	124566	184097.2	894223.7	7.5	430465.2	0.977	0.879	0.988	0.503	0.986	0.838	0.978	Si

Verifica di stabilità per pressoflessione SLD §C.4.2.4.1.3.3.2 NTC18

X	Comb.	Sfruttamento	Classe	NEd	NRk	Mx,Ed max	Mx,Rk	My,Ed max	My,Rk	χ,x	χ,y	kxx	kxy	kyx	kyy	χ,LT	Verifica
0	SLD 4	0.28	1	-14285.6	124566	118950	894223.7	1463.1	430465.2	0.977	0.879	0.683	0.414	0.986	0.689	0.978	Si

Verifica di stabilità a taglio anima Y §4.2.4.1.2.4 [4.2.27] NTC18

η	hw	tw	hw/tw max	Verifica
1.2	15.2	0.6	55.46	Si

Verifica di stabilità a taglio anima Y SLD §4.2.4.1.2.4 [4.2.27] NTC18

η	hw	tw	hw/tw max	Verifica
1.2	15.2	0.6	55.46	Si

Verifiche a deformabilità

Mensola X: No; Mensola Y: No.

Frecce lungo X

Ascissa freccia	Combinazione	Freccia	Luce	L/f	L/f,min	Tipo	Verifica
79.6	SLE RA 1	0	170.7	10000	250	Totale	Si
79.6	SLE RA 31	0	170.7	10000	250	Totale	Si
79.6	SLE RA 30	0	170.7	10000	250	Totale	Si
79.6	SLE RA 29	0	170.7	10000	250	Totale	Si
79.6	SLE RA 28	0	170.7	10000	250	Totale	Si
96.7	SLE RA 2	0	170.7	10000	350	Variabile	Si
74	SLE RA 31	0	170.7	10000	350	Variabile	Si
74	SLE RA 30	0	170.7	10000	350	Variabile	Si
74	SLE RA 29	0	170.7	10000	350	Variabile	Si
74	SLE RA 28	0	170.7	10000	350	Variabile	Si

Frecce lungo Y

Ascissa freccia	Combinazione	Freccia	Luce	L/f	L/f,min	Tipo	Verifica
96.7	SLE RA 33	-0.08	170.7	2146	250	Totale	Si
96.7	SLE RA 32	-0.08	170.7	2146.1	250	Totale	Si
96.7	SLE RA 25	-0.079	170.7	2168.4	250	Totale	Si
96.7	SLE RA 24	-0.079	170.7	2168.5	250	Totale	Si
96.7	SLE RA 21	-0.078	170.7	2179.1	250	Totale	Si
74	SLE RA 2	0	170.7	10000	350	Variabile	Si
108.1	SLE RA 31	-0.01	170.7	10000	350	Variabile	Si
108.1	SLE RA 30	-0.01	170.7	10000	350	Variabile	Si
108.1	SLE RA 29	-0.009	170.7	10000	350	Variabile	Si
108.1	SLE RA 28	-0.009	170.7	10000	350	Variabile	Si

Superelemento in acciaio composto dall'asta 129

Caratteristiche del materiale

Acciaio: S275, fyk = 2750

Caratteristiche geometriche

Lunghezza: 148
Nodo iniziale: 60 Nodo finale: 59
Cerniera iniziale: Svincolo: M2, M3 Cerniera finale: No
Sovraresistenza: 0% Sisma Z: No

Caratteristiche della sezione

Sezione	Rotazione	Area	Jx	Jy	ix	iy	Wx	Wy	Wplx	Wply
HEA160	0	38.82	1674.7	615.62	6.57	3.98	220.36	76.95	245.43	117.67

Verifiche di resistenza

Verifiche a forza assiale §4.2.4.1.2.1 - §4.2.4.1.2.2 NTC18

X	Comb.	Sfruttamento	Classe	NEd	Nc,Rd	Nt,Rd	Riduzione da taglio	ρx	ρy	Verifica
148	SLU 99	0.107		10890.9		101662.9	1	0	0	Si

Verifiche a forza assiale SLD §4.2.4.1.2.1 - §4.2.4.1.2.2 NTC18

X	Comb.	Sfruttamento	Classe	NEd	Nc,Rd	Nt,Rd	Riduzione da taglio	ρx	ρy	Verifica
0	SLD 14	0.072		7272		101662.9	1	0	0	Si

Verifica a taglio Y §4.2.4.1.2.4 NTC18

X	Comb.	Sfruttamento	VEd	Vc,Rd	Av	Interazione taglio-torsione	Riduzione torsione	Verifica
148	SLV 16	0.043	-853.3	19959.4	13.26	Considerata	1	Si

Verifica a taglio Y SLD §4.2.4.1.2.4 NTC18

X	Comb.	Sfruttamento	VEd	Vc,Rd	Av	Interazione taglio-torsione	Riduzione torsione	Verifica
148	SLD 16	0.021	-416.8	20013	13.26	Considerata	1	Si

Verifica a torsione §4.2.4.1.2.5 NTC18

X	Comb.	Sfruttamento torsione	TEd	TRd	Riduzione taglio resistente	Sfruttamento taglio-torsione	τEd,totale	τRd	Verifica
0	SLV 5	0.036	-522.1	14685.6	Considerata				Si

Verifica a torsione SLD §4.2.4.1.2.5 NTC18

X	Comb.	Sfruttamento torsione	TEd	TRd	Riduzione taglio resistente	Sfruttamento taglio-torsione	τEd,totale	τRd	Verifica
0	SLD 5	0.013	-198.1	14685.6	Considerata				Si

Verifica a presso/tenso flessione retta X §§ 4.2.4.1.2.3 - 4.2.4.1.2.6 - 4.2.4.1.2.7 - 4.2.4.1.2.8 NTC18

Verifiche eseguite utilizzando la formula conservativa (6.2) §6.2.1 EN 1993-1-1:2005.

X	Comb.	Sfruttamento	Classe	NEd	NRd	Rid. NRd da VEd	Mx,Ed	Mx,Rd	Rid. Mx,Rd da VEd	Rid. Mx,Rd da NEd	ρx	ρy	Verifica
69.1	SLV 13	0.174	1	8734.6	101662.9	1	56546	642783	1		0	0	Si

Verifica a presso/tenso flessione retta X SLD §§ 4.2.4.1.2.3 - 4.2.4.1.2.6 - 4.2.4.1.2.7 - 4.2.4.1.2.8 NTC18

Verifiche eseguite utilizzando la formula conservativa (6.2) §6.2.1 EN 1993-1-1:2005.

X	Comb.	Sfruttamento	Classe	NEd	NRd	Rid. NRd da VEd	Mx,Ed	Mx,Rd	Rid. Mx,Rd da VEd	Rid. Mx,Rd da NEd	ρx	ρy	Verifica
148	SLD 13	0.162	1	7272	101662.9	1	58348	642783	1		0	0	Si

Verifica a presso/tenso flessione deviata §§ 4.2.4.1.2.3 - 4.2.4.1.2.6 - 4.2.4.1.2.7 - 4.2.4.1.2.8 NTC18

Verifiche eseguite utilizzando la formula conservativa (6.2) §6.2.1 EN 1993-1-1:2005.

X	Comb.	Sfruttamento	Classe	NEd	NRd	Rid. NRd da VEd	Mx,Ed	Mx,Rd	My,Ed	My,Rd	Rid. Mx,Rd da VEd	Rid. Mx,Rd da NEd	Rid. My,Rd da VEd	Rid. My,Rd da NEd	α	β	ρx	ρy	Verifica
148	SLV 16	0.278	1	8734.6	101662.9	1	122950	642783	-161	308186	1		1				0	0	Si

Verifica a presso/tenso flessione deviata SLD §§ 4.2.4.1.2.3 - 4.2.4.1.2.6 - 4.2.4.1.2.7 - 4.2.4.1.2.8 NTC18

Verifiche eseguite utilizzando la formula conservativa (6.2) §6.2.1 EN 1993-1-1:2005.

X	Comb.	Sfruttamento	Classe	NEd	NRd	Rid. NRd da VEd	Mx,Ed	Mx,Rd	My,Ed	My,Rd	Rid. Mx,Rd da VEd	Rid. Mx,Rd da NEd	Rid. My,Rd da VEd	Rid. My,Rd da NEd	α	β	ρx	ρy	Verifica
148	SLD 12	0.098	1	6442.1	101662.9	1	21703	642783	-201	308186	1		1				0	0	Si

Verifiche ad instabilità

Caratteristiche iniziali

Membratura principale per controllo snellezza; Calcolo di snellezze ed N critici condotti secondo gli assi principali;
Curva X: b; Curva Y: c; Svergolamento: Carico all'estradosso; Curva svergolamento: b;

Dati per instabilità attorno a x

Numero rit.	Presente	Ascissa	Campata	βx/m	Vincolo a entrambi estremi	λx/m	λVer
1	Si	0					
			1-2	1	Si	22.5	Si, (<200)
2	Si	148					

Dati per instabilità attorno a y

Numero rit.	Presente	Ascissa	Campata	βy/n	k,LT	kw,LT	Vincolo a entrambi estremi	λy/n	λVer
1	Si	0							
			1-2	1	1	1	Si	37.2	Si, (<200)
2	Si	148							

Verifica a svergolamento con trazione §4.2.4.1.3.2 NTC18 - §5.5.3 ENV 1993-1-1:1994

X	Comb.	Sfruttamento	Classe	Obblig.	NEd	Mx,Ed	Mx,Eff,Ed	Mb,Rd,x	χ,LT	λ adim. LT	L,LT	M,critico	Verifica
69.1	SLV 4	0.061	1	Si	3438.2	-52609.4	-38946.8	642783.4	1	0.278	148	8702008.8	Si

Verifica a svergolamento con trazione SLD §4.2.4.1.3.2 NTC18 - §5.5.3 ENV 1993-1-1:1994

X	Comb.	Sfruttamento	Classe	Obblig.	NEd	Mx,Ed	Mx,Eff,Ed	Mb,Rd,x	χ,LT	λ adim. LT	L,LT	M,critico	Verifica
148	SLD 16	0.046	1	Si	7272	58348.4	29451.1	642783.4	1	0.278	148	8702008.8	Si

Verifica di stabilità per tenso-flessione deviata §5.5.3 - §5.5.4 ENV 1993-1-1:1994

X	Comb.	Sfruttamento	Classe	NEd	Mx,Ed	Mx,Eff,Ed	My,Ed	χ,LT	kLT	ky	M,critico	Wx	Wy	Verifica
148	SLV 2	0.152	1	3438.2	-110954.6	-97291.9	160.6	1	1	1	8702008.8	245.4	117.7	Si

Verifica di stabilità a taglio anima Y §4.2.4.1.2.4 [4.2.27] NTC18

η	hw	tw	hw/tw max	Verifica
1.2	13.4	0.6	55.46	Si

Verifica di stabilità a taglio anima Y SLD §4.2.4.1.2.4 [4.2.27] NTC18

η	hw	tw	hw/tw max	Verifica
1.2	13.4	0.6	55.46	Si

Verifiche a deformabilità

Mensola X: No; Mensola Y: No.

Frecce lungo X

Ascissa freccia	Combinazione	Freccia	Luce	L/f	L/f,min	Tipo	Verifica
88.8	SLE RA 1	0	148	10000	250	Totale	Si
83.9	SLE RA 31	0	148	10000	250	Totale	Si
83.9	SLE RA 30	0	148	10000	250	Totale	Si
83.9	SLE RA 29	0	148	10000	250	Totale	Si
83.9	SLE RA 28	0	148	10000	250	Totale	Si
133.2	SLE RA 2	0	148	10000	350	Variabile	Si
83.9	SLE RA 31	0	148	10000	350	Variabile	Si
83.9	SLE RA 30	0	148	10000	350	Variabile	Si
83.9	SLE RA 29	0	148	10000	350	Variabile	Si
83.9	SLE RA 28	0	148	10000	350	Variabile	Si

Frecce lungo Y

Ascissa freccia	Combinazione	Freccia	Luce	L/f	L/f,min	Tipo	Verifica
88.8	SLE RA 1	0.002	148	10000	250	Totale	Si
88.8	SLE RA 31	0.002	148	10000	250	Totale	Si
88.8	SLE RA 30	0.002	148	10000	250	Totale	Si
88.8	SLE RA 29	0.002	148	10000	250	Totale	Si
88.8	SLE RA 28	0.002	148	10000	250	Totale	Si
83.9	SLE RA 2	0	148	10000	350	Variabile	Si
83.9	SLE RA 31	0.001	148	10000	350	Variabile	Si
83.9	SLE RA 30	0.001	148	10000	350	Variabile	Si
83.9	SLE RA 29	0	148	10000	350	Variabile	Si
83.9	SLE RA 28	0	148	10000	350	Variabile	Si

Superelemento in acciaio composto dall'asta 130

Caratteristiche del materiale

Acciaio: S275, fyk = 2750

Caratteristiche geometriche

Lunghezza: 299
Nodo iniziale: 59 Nodo finale: 58
Cerniera iniziale: No Cerniera finale: No
Sovraresistenza: 0% Sisma Z: No

Caratteristiche della sezione

Sezione	Rotazione	Area	Jx	Jy	ix	iy	Wx	Wy	Wplx	Wply
HEA160	0	38.82	1674.7	615.62	6.57	3.98	220.36	76.95	245.43	117.67

Verifiche di resistenza

Verifiche a forza assiale §4.2.4.1.2.1 - §4.2.4.1.2.2 NTC18

X	Comb.	Sfruttamento	Classe	NEd	Nc,Rd	Nt,Rd	Riduzione da taglio	ρx	ρy	Verifica
0	SLU 132	0.129		13161.7		101662.9	1	0	0	Si

Verifiche a forza assiale SLD §4.2.4.1.2.1 - §4.2.4.1.2.2 NTC18

X	Comb.	Sfruttamento	Classe	NEd	Nc,Rd	Nt,Rd	Riduzione da taglio	ρx	ρy	Verifica
299	SLD 8	0.07		7114.2		101662.9	1	0	0	Si

Verifica a taglio Y §4.2.4.1.2.4 NTC18

X	Comb.	Sfruttamento	VEd	Vc,Rd	Av	Interazione taglio-torsione	Riduzione torsione	Verifica
0	SLV 16	0.041	827.8	20045.7	13.26	Considerata	1	Si

Verifica a taglio Y SLD §4.2.4.1.2.4 NTC18

X	Comb.	Sfruttamento	VEd	Vc,Rd	Av	Interazione taglio-torsione	Riduzione torsione	Verifica
299	SLD 1	0.02	-395.7	20045.7	13.26	Considerata	1	Si

Verifica a presso/tenso flessione retta X §§ 4.2.4.1.2.3 - 4.2.4.1.2.6 - 4.2.4.1.2.7 - 4.2.4.1.2.8 NTC18

Verifiche eseguite utilizzando la formula conservativa (6.2) §6.2.1 EN 1993-1-1:2005.

X	Comb.	Sfruttamento	Classe	NEd	NRd	Rid. NRd da VEd	Mx,Ed	Mx,Rd	Rid. Mx,Rd da VEd	Rid. Mx,Rd da NEd	ρx	ρy	Verifica
0	SLU 99	0.146	1	13161.7	101662.9	1	10314	642783	1		0	0	Si

Verifica a presso/tenso flessione deviata §§ 4.2.4.1.2.3 - 4.2.4.1.2.6 - 4.2.4.1.2.7 - 4.2.4.1.2.8 NTC18

Verifiche eseguite utilizzando la formula conservativa (6.2) §6.2.1 EN 1993-1-1:2005.

X	Comb.	Sfruttamento	Classe	NEd	NRd	Rid. NRd da VEd	Mx,Ed	Mx,Rd	My,Ed	My,Rd	Rid. Mx,Rd da VEd	Rid. Mx,Rd da NEd	Rid. My,Rd da VEd	Rid. My,Rd da NEd	α	β	ρx	ρy	Verifica
0	SLV 13	0.263	1	7114.2	101662.9	1	122950	642783	458	308186	1		1				0	0	Si

Verifica a presso/tenso flessione deviata SLD §§ 4.2.4.1.2.3 - 4.2.4.1.2.6 - 4.2.4.1.2.7 - 4.2.4.1.2.8 NTC18

Verifiche eseguite utilizzando la formula conservativa (6.2) §6.2.1 EN 1993-1-1:2005.

X	Comb.	Sfruttamento	Classe	NEd	NRd	Rid. NRd da VEd	Mx,Ed	Mx,Rd	My,Ed	My,Rd	Rid. Mx,Rd da VEd	Rid. Mx,Rd da NEd	Rid. My,Rd da VEd	Rid. My,Rd da NEd	α	β	ρx	ρy	Verifica
299	SLD 2	0.161	1	7114.2	101662.9	1	58348	642783	174	308186	1		1				0	0	Si

Verifiche ad instabilità

Caratteristiche iniziali

Membratura principale per controllo snellezza; Calcolo di snellezze ed N critici condotti secondo gli assi principali;
Curva X: b; Curva Y: c; Svergolamento: Carico all'estradosso; Curva svergolamento: b;

Dati per instabilità attorno a x

Numero rit.	Presente	Ascissa	Campata	βx/m	Vincolo a entrambi estremi	λx/m	λVer
1	Si	0					
			1-2	1	Si	45.5	Si, (<200)
2	Si	299					

Dati per instabilità attorno a y

Numero rit.	Presente	Ascissa	Campata	βy/n	k,LT	kw,LT	Vincolo a entrambi estremi	λy/n	λVer
1	Si	0							
			1-2	1	1	1	Si	75.1	Si, (<200)
2	Si	299							

Verifica di stabilità per tenso-flessione deviata §5.5.3 - §5.5.4 ENV 1993-1-1:1994

X	Comb.	Sfruttamento	Classe	NEd	Mx,Ed	Mx,Eff,Ed	My,Ed	χ,LT	kLT	ky	M,critico	Wx	Wy	Verifica
0	SLV 13	0.178	1	7114.2	122949.7	94679.6	457.6	0.836	1	1	1151208.3	245.4	117.7	Si

Verifica di stabilità per tenso-flessione deviata SLD §5.5.3 - §5.5.4 ENV 1993-1-1:1994

X	Comb.	Sfruttamento	Classe	NEd	Mx,Ed	Mx,Eff,Ed	My,Ed	χ,LT	kLT	ky	M,critico	Wx	Wy	Verifica
299	SLD 2	0.057	1	7114.2	58348.4	30078.2	174.4	0.836	1	1	1151208.3	245.4	117.7	Si

Verifica di stabilità a taglio anima Y §4.2.4.1.2.4 [4.2.27] NTC18

η	hw	tw	hw/tw max	Verifica
1.2	13.4	0.6	55.46	Si

Verifica di stabilità a taglio anima Y SLD §4.2.4.1.2.4 [4.2.27] NTC18

η	hw	tw	hw/tw max	Verifica
1.2	13.4	0.6	55.46	Si

Verifiche a deformabilità

Mensola X: No; Mensola Y: No.

Frecce lungo X

Ascissa freccia	Combinazione	Freccia	Luce	L/f	L/f,min	Tipo	Verifica
149.5	SLE RA 1	0	299	10000	250	Totale	Si
149.5	SLE RA 31	0	299	10000	250	Totale	Si
149.5	SLE RA 30	0	299	10000	250	Totale	Si
149.5	SLE RA 29	0	299	10000	250	Totale	Si
149.5	SLE RA 28	0	299	10000	250	Totale	Si
149.5	SLE RA 2	0	299	10000	350	Variabile	Si
149.5	SLE RA 31	0	299	10000	350	Variabile	Si
149.5	SLE RA 30	0	299	10000	350	Variabile	Si
149.5	SLE RA 29	0	299	10000	350	Variabile	Si
149.5	SLE RA 28	0	299	10000	350	Variabile	Si

Frecce lungo Y

Ascissa freccia	Combinazione	Freccia	Luce	L/f	L/f,min	Tipo	Verifica
149.5	SLE RA 1	0.01	299	10000	250	Totale	Si
149.5	SLE RA 31	0.013	299	10000	250	Totale	Si
149.5	SLE RA 30	0.013	299	10000	250	Totale	Si
149.5	SLE RA 29	0.013	299	10000	250	Totale	Si
149.5	SLE RA 28	0.013	299	10000	250	Totale	Si
149.5	SLE RA 2	0	299	10000	350	Variabile	Si
139.5	SLE RA 31	0.003	299	10000	350	Variabile	Si
139.5	SLE RA 30	0.003	299	10000	350	Variabile	Si
139.5	SLE RA 29	0.003	299	10000	350	Variabile	Si
139.5	SLE RA 28	0.003	299	10000	350	Variabile	Si

Superelemento in acciaio composto dall'asta 131

Caratteristiche del materiale

Acciaio: S275, fyk = 2750

Caratteristiche geometriche

Lunghezza: 148
Nodo iniziale: 58 Nodo finale: 57
Cerniera iniziale: No Cerniera finale: Svincolo: M2, M3
Sovraresistenza: 0% Sisma Z: No

Caratteristiche della sezione

Sezione	Rotazione	Area	Jx	Jy	ix	iy	Wx	Wy	Wplx	Wply
HEA160	0	38.82	1674.7	615.62	6.57	3.98	220.36	76.95	245.43	117.67

Verifiche di resistenza

Verifiche a forza assiale §4.2.4.1.2.1 - §4.2.4.1.2.2 NTC18

X	Comb.	Sfruttamento	Classe	NEd	Nc,Rd	Nt,Rd	Riduzione da taglio	ρx	ρy	Verifica
4.9	SLU 132	0.107		10874.8		101662.9	1	0	0	Si

Verifiche a forza assiale SLD §4.2.4.1.2.1 - §4.2.4.1.2.2 NTC18

X	Comb.	Sfruttamento	Classe	NEd	Nc,Rd	Nt,Rd	Riduzione da taglio	ρx	ρy	Verifica
0	SLD 1	0.072		7272		101662.9	1	0	0	Si

Verifica a taglio Y §4.2.4.1.2.4 NTC18

X	Comb.	Sfruttamento	VEd	Vc,Rd	Av	Interazione taglio-torsione	Riduzione torsione	Verifica
0	SLV 4	0.043	853.3	19959.4	13.26	Considerata	1	Si

Verifica a taglio Y SLD §4.2.4.1.2.4 NTC18

X	Comb.	Sfruttamento	VEd	Vc,Rd	Av	Interazione taglio-torsione	Riduzione torsione	Verifica
0	SLD 4	0.021	416.8	20013	13.26	Considerata	1	Si

Verifica a torsione §4.2.4.1.2.5 NTC18

X	Comb.	Sfruttamento torsione	TEd	TRd	Riduzione taglio resistente	Sfruttamento taglio-torsione	τEd,totale	τRd	Verifica
78.9	SLV 9	0.036	522.1	14685.6	Considerata				Si

Verifica a torsione SLD §4.2.4.1.2.5 NTC18

X	Comb.	Sfruttamento torsione	TEd	TRd	Riduzione taglio resistente	Sfruttamento taglio-torsione	τEd,totale	τRd	Verifica
78.9	SLD 9	0.013	198.1	14685.6	Considerata				Si

Verifica a presso/tenso flessione retta X §§ 4.2.4.1.2.3 - 4.2.4.1.2.6 - 4.2.4.1.2.7 - 4.2.4.1.2.8 NTC18

Verifiche eseguite utilizzando la formula conservativa (6.2) §6.2.1 EN 1993-1-1:2005.

X	Comb.	Sfruttamento	Classe	NEd	NRd	Rid. NRd da VEd	Mx,Ed	Mx,Rd	Rid. Mx,Rd da VEd	Rid. Mx,Rd da NEd	ρx	ρy	Verifica
78.9	SLV 1	0.174	1	8734.6	101662.9	1	56546	642783	1		0	0	Si

Verifica a presso/tenso flessione retta X SLD §§ 4.2.4.1.2.3 - 4.2.4.1.2.6 - 4.2.4.1.2.7 - 4.2.4.1.2.8 NTC18

Verifiche eseguite utilizzando la formula conservativa (6.2) §6.2.1 EN 1993-1-1:2005.

X	Comb.	Sfruttamento	Classe	NEd	NRd	Rid. NRd da VEd	Mx,Ed	Mx,Rd	Rid. Mx,Rd da VEd	Rid. Mx,Rd da NEd	ρx	ρy	Verifica
0	SLD 1	0.162	1	7272	101662.9	1	58348	642783	1		0	0	Si

Verifica a presso/tenso flessione deviata §§ 4.2.4.1.2.3 - 4.2.4.1.2.6 - 4.2.4.1.2.7 - 4.2.4.1.2.8 NTC18

Verifiche eseguite utilizzando la formula conservativa (6.2) §6.2.1 EN 1993-1-1:2005.

X	Comb.	Sfruttamento	Classe	NEd	NRd	Rid. NRd da VEd	Mx,Ed	Mx,Rd	My,Ed	My,Rd	Rid. Mx,Rd da VEd	Rid. Mx,Rd da NEd	Rid. My,Rd da VEd	Rid. My,Rd da NEd	α	β	ρx	ρy	Verifica
0	SLV 4	0.278	1	8734.6	101662.9	1	122950	642783	-161	308186	1		1				0	0	Si

Verifica a presso/tenso flessione deviata SLD §§ 4.2.4.1.2.3 - 4.2.4.1.2.6 - 4.2.4.1.2.7 - 4.2.4.1.2.8 NTC18

Verifiche eseguite utilizzando la formula conservativa (6.2) §6.2.1 EN 1993-1-1:2005.

X	Comb.	Sfruttamento	Classe	NEd	NRd	Rid. NRd da VEd	Mx,Ed	Mx,Rd	My,Ed	My,Rd	Rid. Mx,Rd da VEd	Rid. Mx,Rd da NEd	Rid. My,Rd da VEd	Rid. My,Rd da NEd	α	β	ρx	ρy	Verifica
0	SLD 8	0.098	1	6442.1	101662.9	1	21703	642783	-201	308186	1		1				0	0	Si

Verifiche ad instabilità

Caratteristiche iniziali

Membratura principale per controllo snellezza; Calcolo di snellezze ed N critici condotti secondo gli assi principali;
Curva X: b; Curva Y: c; Svergolamento: Carico all'estradosso; Curva svergolamento: b;

Dati per instabilità attorno a x

Numero rit.	Presente	Ascissa	Campata	βx/m	Vincolo a entrambi estremi	λx/m	λVer
1	Si	0					
			1-2	1	Si	22.5	Si, (<200)
2	Si	148					

Dati per instabilità attorno a y

Numero rit.	Presente	Ascissa	Campata	βy/n	k,LT	kw,LT	Vincolo a entrambi estremi	λy/n	λVer
1	Si	0							
			1-2	1	1	1	Si	37.2	Si, (<200)
2	Si	148							

Verifica a svergolamento con trazione §4.2.4.1.3.2 NTC18 - §5.5.3 ENV 1993-1-1:1994

X	Comb.	Sfruttamento	Classe	Obblig.	NEd	Mx,Ed	Mx,Eff,Ed	Mb,Rd,x	χ,LT	λ adim. LT	L,LT	M,critico	Verifica
78.9	SLV 16	0.061	1	Si	3438.2	-52609.4	-38946.8	642783.4	1	0.278	148	8702008.8	Si

Verifica a svergolamento con trazione SLD §4.2.4.1.3.2 NTC18 - §5.5.3 ENV 1993-1-1:1994

X	Comb.	Sfruttamento	Classe	Obblig.	NEd	Mx,Ed	Mx,Eff,Ed	Mb,Rd,x	χ,LT	λ adim. LT	L,LT	M,critico	Verifica
0	SLD 4	0.046	1	Si	7272	58348.4	29451.1	642783.4	1	0.278	148	8702008.8	Si

Verifica di stabilità per tenso-flessione deviata §5.5.3 - §5.5.4 ENV 1993-1-1:1994

X	Comb.	Sfruttamento	Classe	NEd	Mx,Ed	Mx,Eff,Ed	My,Ed	χ,LT	kLT	ky	M,critico	Wx	Wy	Verifica
0	SLV 13	0.152	1	3438.2	-110954.6	-97291.9	160.6	1	1	1	8702008.8	245.4	117.7	Si

Verifica di stabilità a taglio anima Y §4.2.4.1.2.4 [4.2.27] NTC18

η	hw	tw	hw/tw max	Verifica
1.2	13.4	0.6	55.46	Si

Verifica di stabilità a taglio anima Y SLD §4.2.4.1.2.4 [4.2.27] NTC18

η	hw	tw	hw/tw max	Verifica
1.2	13.4	0.6	55.46	Si

Verifiche a deformabilità

Mensola X: No; Mensola Y: No.

Frecce lungo X

Ascissa freccia	Combinazione	Freccia	Luce	L/f	L/f,min	Tipo	Verifica
59.2	SLE RA 1	0	148	10000	250	Totale	Si
59.2	SLE RA 31	0	148	10000	250	Totale	Si
59.2	SLE RA 30	0	148	10000	250	Totale	Si
59.2	SLE RA 29	0	148	10000	250	Totale	Si
59.2	SLE RA 28	0	148	10000	250	Totale	Si
14.8	SLE RA 2	0	148	10000	350	Variabile	Si
64.1	SLE RA 31	0	148	10000	350	Variabile	Si
64.1	SLE RA 30	0	148	10000	350	Variabile	Si
64.1	SLE RA 29	0	148	10000	350	Variabile	Si
64.1	SLE RA 28	0	148	10000	350	Variabile	Si

Frecce lungo Y

Ascissa freccia	Combinazione	Freccia	Luce	L/f	L/f,min	Tipo	Verifica
59.2	SLE RA 1	0.002	148	10000	250	Totale	Si
59.2	SLE RA 31	0.002	148	10000	250	Totale	Si
59.2	SLE RA 30	0.002	148	10000	250	Totale	Si
59.2	SLE RA 29	0.002	148	10000	250	Totale	Si
59.2	SLE RA 28	0.002	148	10000	250	Totale	Si
64.1	SLE RA 2	0	148	10000	350	Variabile	Si
64.1	SLE RA 31	0	148	10000	350	Variabile	Si
64.1	SLE RA 30	0	148	10000	350	Variabile	Si
64.1	SLE RA 29	0	148	10000	350	Variabile	Si
64.1	SLE RA 28	0	148	10000	350	Variabile	Si

Superelemento in acciaio composto dall'asta 132

Caratteristiche del materiale

Acciaio: S275, fyk = 2750

Caratteristiche geometriche

Lunghezza: 215.2
Nodo iniziale: 19 Nodo finale: 59
Cerniera iniziale: Svincolo: M2, M3 Cerniera finale: Svincolo: M2, M3
Sovraresistenza: 0% Sisma Z: No

Caratteristiche della sezione

Sezione	Rotazione	Area	Jx	Jy	ix	iy	Wx	Wy	Wplx	Wply
HEA160	0	38.82	1674.7	615.62	6.57	3.98	220.36	76.95	245.43	117.67

Verifiche di resistenza

Verifiche a forza assiale §4.2.4.1.2.1 - §4.2.4.1.2.2 NTC18

X	Comb.	Sfruttamento	Classe	NEd	Nc,Rd	Nt,Rd	Riduzione da taglio	ρx	ρy	Verifica
215.2	SLV 4	0.036		3628.9		101662.9	1	0	0	Si

Verifiche a forza assiale SLD §4.2.4.1.2.1 - §4.2.4.1.2.2 NTC18

X	Comb.	Sfruttamento	Classe	NEd	Nc,Rd	Nt,Rd	Riduzione da taglio	ρx	ρy	Verifica
215.2	SLD 4	0.018		1866		101662.9	1	0	0	Si

Verifica a taglio Y §4.2.4.1.2.4 NTC18

X	Comb.	Sfruttamento	VEd	Vc,Rd	Av	Interazione taglio-torsione	Riduzione torsione	Verifica
0	SLU 91	0.002	37.7	20045.7	13.26	Considerata	1	Si

Verifica a taglio Y SLD §4.2.4.1.2.4 NTC18

X	Comb.	Sfruttamento	VEd	Vc,Rd	Av	Interazione taglio-torsione	Riduzione torsione	Verifica
0	SLD 9	0.001	29	19889.6	13.26	Considerata	0.99	Si

Verifica a torsione §4.2.4.1.2.5 NTC18

X	Comb.	Sfruttamento torsione	TEd	TRd	Riduzione taglio resistente	Sfruttamento taglio-torsione	τEd,totale	τRd	Verifica
114.7	SLV 9	0.051	-748.4	14685.6	Considerata				Si

Verifica a torsione SLD §4.2.4.1.2.5 NTC18

X	Comb.	Sfruttamento torsione	TEd	TRd	Riduzione taglio resistente	Sfruttamento taglio-torsione	τEd,totale	τRd	Verifica
14.3	SLD 9	0.019	-284.7	14685.6	Considerata				Si

Verifica a flessione semplice X SLD §§ 4.2.4.1.2.3 - 4.2.4.1.2.6 - 4.2.4.1.2.7 - 4.2.4.1.2.8 NTC18

X	Comb.	Sfruttamento	Classe	Mx,Ed	Mx,Rd	Rid. Mx,Rd da VEd	ρx	ρy	Verifica
107.6	SLD 9	0.002	1	-1561.1	642783.4	1	0	0	Si

Verifica a presso/tenso flessione retta X §§ 4.2.4.1.2.3 - 4.2.4.1.2.6 - 4.2.4.1.2.7 - 4.2.4.1.2.8 NTC18

Verifiche eseguite utilizzando la formula conservativa (6.2) §6.2.1 EN 1993-1-1:2005.

X	Comb.	Sfruttamento	Classe	NEd	NRd	Rid. NRd da VEd	Mx,Ed	Mx,Rd	Rid. Mx,Rd da VEd	Rid. Mx,Rd da NEd	ρx	ρy	Verifica
107.6	SLV 3	0.038	1	3613.6	101662.9	1	-1561	642783	1		0	0	Si

Verifica a presso/tenso flessione retta X SLD §§ 4.2.4.1.2.3 - 4.2.4.1.2.6 - 4.2.4.1.2.7 - 4.2.4.1.2.8 NTC18

Verifiche eseguite utilizzando la formula conservativa (6.2) §6.2.1 EN 1993-1-1:2005.

X	Comb.	Sfruttamento	Classe	NEd	NRd	Rid. NRd da VEd	Mx,Ed	Mx,Rd	Rid. Mx,Rd da VEd	Rid. Mx,Rd da NEd	ρx	ρy	Verifica
107.6	SLD 4	0.021	1	1850.7	101662.9	1	-1561	642783	1		0	0	Si

Verifiche ad instabilità

Caratteristiche iniziali

Membratura principale per controllo snellezza; Calcolo di snellezze ed N critici condotti secondo gli assi principali;
Curva X: b; Curva Y: c; Svergolamento: Carico all'estradosso; Curva svergolamento: b;

Dati per instabilità attorno a x

Numero rit.	Presente	Ascissa	Campata	βx/m	Vincolo a entrambi estremi	λx/m	λVer
1	Si	0					
			1-2	1	Si	32.8	Si, (<200)
2	Si	215.2					

Dati per instabilità attorno a y

Numero rit.	Presente	Ascissa	Campata	βy/n	k,LT	kw,LT	Vincolo a entrambi estremi	λy/n	λVer
1	Si	0							
			1-2	1	1	1	Si	54	Si, (<200)
2	Si	215.2							

Verifica a svergolamento SLD §4.2.4.1.3.2 NTC18

X	Comb.	Sfruttamento	Classe	Obblig.	Mx,Ed	Mb,Rd,x	χ,LT	λ adim. LT	L,LT	M,critico	Verifica
107.6	SLD 9	0.003	1	Si	-1561.1	588430.1	0.915	0.604	215.2	1851896.4	Si

Verifica di stabilità per pressoflessione §C.4.2.4.1.3.3.2 NTC18

X	Comb.	Sfruttamento	Classe	NEd	NRk	Mx,Ed max	Mx,Rk	My,Ed max	My,Rk	χ,x	χ,y	kxx	kxy	kyx	kyy	χ,LT	Verifica
0	SLV 14	0.038	1	-2784.8	106746.1	1561.1	674922.6	1.1	323595.1	0.935	0.772	0.955	0.583	0.997	0.972	0.915	Si

Verifica di stabilità per pressoflessione SLD §C.4.2.4.1.3.3.2 NTC18

X	Comb.	Sfruttamento	Classe	NEd	NRk	Mx,Ed max	Mx,Rk	My,Ed max	My,Rk	χ,x	χ,y	kxx	kxy	kyx	kyy	χ,LT	Verifica
0	SLD 13	0.016	1	-1021.9	106746.1	1561.1	674922.6	1.1	323595.1	0.935	0.772	0.952	0.575	0.999	0.958	0.915	Si

Verifica di stabilità a taglio anima Y §4.2.4.1.2.4 [4.2.27] NTC18

η	hw	tw	hw/tw max	Verifica
1.2	13.4	0.6	55.46	Si

Verifica di stabilità a taglio anima Y SLD §4.2.4.1.2.4 [4.2.27] NTC18

η	hw	tw	hw/tw max	Verifica
1.2	13.4	0.6	55.46	Si

Verifiche a deformabilità

Mensola X: No; Mensola Y: No.

Frecce lungo X

Ascissa freccia	Combinazione	Freccia	Luce	L/f	L/f,min	Tipo	Verifica
107.6	SLE RA 1	0	215.2	10000	250	Totale	Si
107.6	SLE RA 31	0	215.2	10000	250	Totale	Si
107.6	SLE RA 30	0	215.2	10000	250	Totale	Si
107.6	SLE RA 29	0	215.2	10000	250	Totale	Si
107.6	SLE RA 28	0	215.2	10000	250	Totale	Si
179.3	SLE RA 2	0	215.2	10000	350	Variabile	Si
200.8	SLE RA 31	0	215.2	10000	350	Variabile	Si
200.8	SLE RA 30	0	215.2	10000	350	Variabile	Si
200.8	SLE RA 29	0	215.2	10000	350	Variabile	Si
157.8	SLE RA 28	0	215.2	10000	350	Variabile	Si

Frecce lungo Y

Ascissa freccia	Combinazione	Freccia	Luce	L/f	L/f,min	Tipo	Verifica
107.6	SLE RA 1	-0.002	215.2	10000	250	Totale	Si
107.6	SLE RA 31	-0.002	215.2	10000	250	Totale	Si
107.6	SLE RA 30	-0.002	215.2	10000	250	Totale	Si
107.6	SLE RA 29	-0.002	215.2	10000	250	Totale	Si
107.6	SLE RA 28	-0.002	215.2	10000	250	Totale	Si
179.3	SLE RA 2	0	215.2	10000	350	Variabile	Si
164.9	SLE RA 31	0	215.2	10000	350	Variabile	Si
164.9	SLE RA 30	0	215.2	10000	350	Variabile	Si
164.9	SLE RA 29	0	215.2	10000	350	Variabile	Si
164.9	SLE RA 28	0	215.2	10000	350	Variabile	Si

Superelemento in acciaio composto dall'asta 133

Caratteristiche del materiale

Acciaio: S275, fyk = 2750

Caratteristiche geometriche

Lunghezza: 215.2
Nodo iniziale: 18 Nodo finale: 58
Cerniera iniziale: Svincolo: M2, M3 Cerniera finale: Svincolo: M2, M3
Sovraresistenza: 0% Sisma Z: No

Caratteristiche della sezione

Sezione	Rotazione	Area	Jx	Jy	ix	iy	Wx	Wy	Wplx	Wply
HEA160	0	38.82	1674.7	615.62	6.57	3.98	220.36	76.95	245.43	117.67

Verifiche di resistenza

Verifiche a forza assiale §4.2.4.1.2.1 - §4.2.4.1.2.2 NTC18

X	Comb.	Sfruttamento	Classe	NEd	Nc,Rd	Nt,Rd	Riduzione da taglio	ρx	ρy	Verifica
215.2	SLV 16	0.036		3628.9		101662.9	1	0	0	Si

Verifiche a forza assiale SLD §4.2.4.1.2.1 - §4.2.4.1.2.2 NTC18

X	Comb.	Sfruttamento	Classe	NEd	Nc,Rd	Nt,Rd	Riduzione da taglio	ρx	ρy	Verifica
215.2	SLD 16	0.018		1866		101662.9	1	0	0	Si

Verifica a taglio Y §4.2.4.1.2.4 NTC18

X	Comb.	Sfruttamento	VEd	Vc,Rd	Av	Interazione taglio-torsione	Riduzione torsione	Verifica
215.2	SLU 103	0.002	-37.7	20045.7	13.26	Considerata	1	Si

Verifica a taglio Y SLD §4.2.4.1.2.4 NTC18

X	Comb.	Sfruttamento	VEd	Vc,Rd	Av	Interazione taglio-torsione	Riduzione torsione	Verifica
0	SLD 5	0.001	29	19889.6	13.26	Considerata	0.99	Si

Verifica a torsione §4.2.4.1.2.5 NTC18

X	Comb.	Sfruttamento torsione	TEd	TRd	Riduzione taglio resistente	Sfruttamento taglio-torsione	τEd,totale	τRd	Verifica
0	SLV 5	0.051	748.4	14685.6	Considerata				Si

Verifica a torsione SLD §4.2.4.1.2.5 NTC18

X	Comb.	Sfruttamento torsione	TEd	TRd	Riduzione taglio resistente	Sfruttamento taglio-torsione	τEd,totale	τRd	Verifica
114.7	SLD 5	0.019	284.7	14685.6	Considerata				Si

Verifica a flessione semplice X SLD §§ 4.2.4.1.2.3 - 4.2.4.1.2.6 - 4.2.4.1.2.7 - 4.2.4.1.2.8 NTC18

X	Comb.	Sfruttamento	Classe	Mx,Ed	Mx,Rd	Rid. Mx,Rd da VEd	ρx	ρy	Verifica
107.6	SLD 5	0.002	1	-1561.1	642783.4	1	0	0	Si

Verifica a presso/tenso flessione retta X §§ 4.2.4.1.2.3 - 4.2.4.1.2.6 - 4.2.4.1.2.7 - 4.2.4.1.2.8 NTC18

Verifiche eseguite utilizzando la formula conservativa (6.2) §6.2.1 EN 1993-1-1:2005.

X	Comb.	Sfruttamento	Classe	NEd	NRd	Rid. NRd da VEd	Mx,Ed	Mx,Rd	Rid. Mx,Rd da VEd	Rid. Mx,Rd da NEd	ρx	ρy	Verifica
107.6	SLV 16	0.038	1	3613.6	101662.9	1	-1561	642783	1		0	0	Si

Verifica a presso/tenso flessione retta X SLD §§ 4.2.4.1.2.3 - 4.2.4.1.2.6 - 4.2.4.1.2.7 - 4.2.4.1.2.8 NTC18

Verifiche eseguite utilizzando la formula conservativa (6.2) §6.2.1 EN 1993-1-1:2005.

X	Comb.	Sfruttamento	Classe	NEd	NRd	Rid. NRd da VEd	Mx,Ed	Mx,Rd	Rid. Mx,Rd da VEd	Rid. Mx,Rd da NEd	ρx	ρy	Verifica
107.6	SLD 15	0.021	1	1850.7	101662.9	1	-1561	642783	1		0	0	Si

Verifiche ad instabilità

Caratteristiche iniziali

Membratura principale per controllo snellezza; Calcolo di snellezze ed N critici condotti secondo gli assi principali;
Curva X: b; Curva Y: c; Svergolamento: Carico all'estradosso; Curva svergolamento: b;

Dati per instabilità attorno a x

Numero rit.	Presente	Ascissa	Campata	βx/m	Vincolo a entrambi estremi	λx/m	λVer
1	Si	0					
			1-2	1	Si	32.8	Si, (<200)
2	Si	215.2					

Dati per instabilità attorno a y

Numero rit.	Presente	Ascissa	Campata	βy/n	k,LT	kw,LT	Vincolo a entrambi estremi	λy/n	λVer
1	Si	0							
			1-2	1	1	1	Si	54	Si, (<200)
2	Si	215.2							

Verifica a svergolamento SLD §4.2.4.1.3.2 NTC18

X	Comb.	Sfruttamento	Classe	Obblig.	Mx,Ed	Mb,Rd,x	χ,LT	λ adim. LT	L,LT	M,critico	Verifica
107.6	SLD 5	0.003	1	Si	-1561.1	588430.3	0.915	0.604	215.2	1851899.2	Si

Verifica di stabilità per pressoflessione §C.4.2.4.1.3.3.2 NTC18

X	Comb.	Sfruttamento	Classe	NEd	NRk	Mx,Ed max	Mx,Rk	My,Ed max	My,Rk	χ,x	χ,y	kxx	kxy	kyx	kyy	χ,LT	Verifica
0	SLV 1	0.038	1	-2784.8	106746.1	1561.1	674922.6	0	323595.1	0.935	0.772	0.955	0.368	0.997	0.614	0.915	Si

Verifica di stabilità per pressoflessione SLD §C.4.2.4.1.3.3.2 NTC18

X	Comb.	Sfruttamento	Classe	NEd	NRk	Mx,Ed max	Mx,Rk	My,Ed max	My,Rk	χ,x	χ,y	kxx	kxy	kyx	kyy	χ,LT	Verifica
0	SLD 1	0.016	1	-1021.9	106746.1	1561.1	674922.6	0	323595.1	0.935	0.772	0.952	0.363	0.999	0.605	0.915	Si

Verifica di stabilità a taglio anima Y §4.2.4.1.2.4 [4.2.27] NTC18

η	hw	tw	hw/tw max	Verifica
1.2	13.4	0.6	55.46	Si

Verifica di stabilità a taglio anima Y SLD §4.2.4.1.2.4 [4.2.27] NTC18

η	hw	tw	hw/tw max	Verifica
1.2	13.4	0.6	55.46	Si

Verifiche a deformabilità

Mensola X: No; Mensola Y: No.

Frecce lungo X

Ascissa freccia	Combinazione	Freccia	Luce	L/f	L/f,min	Tipo	Verifica
186.5	SLE RA 1	0	215.2	10000	250	Totale	Si
186.5	SLE RA 31	0	215.2	10000	250	Totale	Si
186.5	SLE RA 30	0	215.2	10000	250	Totale	Si
186.5	SLE RA 29	0	215.2	10000	250	Totale	Si
186.5	SLE RA 28	0	215.2	10000	250	Totale	Si
186.5	SLE RA 2	0	215.2	10000	350	Variabile	Si
172.1	SLE RA 31	0	215.2	10000	350	Variabile	Si
172.1	SLE RA 30	0	215.2	10000	350	Variabile	Si
129.1	SLE RA 29	0	215.2	10000	350	Variabile	Si
200.8	SLE RA 28	0	215.2	10000	350	Variabile	Si

Frecce lungo Y

Ascissa freccia	Combinazione	Freccia	Luce	L/f	L/f,min	Tipo	Verifica
107.6	SLE RA 1	-0.002	215.2	10000	250	Totale	Si
107.6	SLE RA 31	-0.002	215.2	10000	250	Totale	Si
107.6	SLE RA 30	-0.002	215.2	10000	250	Totale	Si
107.6	SLE RA 29	-0.002	215.2	10000	250	Totale	Si
107.6	SLE RA 28	-0.002	215.2	10000	250	Totale	Si
157.8	SLE RA 2	0	215.2	10000	350	Variabile	Si
200.8	SLE RA 31	0	215.2	10000	350	Variabile	Si
200.8	SLE RA 30	0	215.2	10000	350	Variabile	Si
200.8	SLE RA 29	0	215.2	10000	350	Variabile	Si
200.8	SLE RA 28	0	215.2	10000	350	Variabile	Si

Superelemento in acciaio composto dall'asta 134

Caratteristiche del materiale

Acciaio: S275, fyk = 2750

Caratteristiche geometriche

Lunghezza: 105.1
Nodo iniziale: 59 Nodo finale: 86
Cerniera iniziale: Svincolo: M2, M3 Cerniera finale: Svincolo: M2, M3
Sovraresistenza: 0% Sisma Z: No

Caratteristiche della sezione

Sezione	Rotazione	Area	Jx	Jy	ix	iy	Wx	Wy	Wplx	Wply
HEA160	0	38.82	1674.7	615.62	6.57	3.98	220.36	76.95	245.43	117.67

Verifiche di resistenza

Verifiche a forza assiale §4.2.4.1.2.1 - §4.2.4.1.2.2 NTC18

X	Comb.	Sfruttamento	Classe	NEd	Nc,Rd	Nt,Rd	Riduzione da taglio	ρx	ρy	Verifica
105.1	SLU 120	0.016		1620.3		101662.9	1	0	0	Si

Verifiche a forza assiale SLD §4.2.4.1.2.1 - §4.2.4.1.2.2 NTC18

X	Comb.	Sfruttamento	Classe	NEd	Nc,Rd	Nt,Rd	Riduzione da taglio	ρx	ρy	Verifica
105.1	SLD 16	0.008		850.4		101662.9	1	0	0	Si

Verifica a taglio Y §4.2.4.1.2.4 NTC18

X	Comb.	Sfruttamento	VEd	Vc,Rd	Av	Interazione taglio-torsione	Riduzione torsione	Verifica
0	SLU 131	0.001	18.3	20045.7	13.26	Considerata	1	Si

Verifica a taglio Y SLD §4.2.4.1.2.4 NTC18

X	Comb.	Sfruttamento	VEd	Vc,Rd	Av	Interazione taglio-torsione	Riduzione torsione	Verifica
105.1	SLD 10	0.001	-14.1	19764.6	13.26	Considerata	0.99	Si

Verifica a torsione §4.2.4.1.2.5 NTC18

X	Comb.	Sfruttamento torsione	TEd	TRd	Riduzione taglio resistente	Sfruttamento taglio-torsione	τEd,totale	τRd	Verifica
7	SLV 9	0.092	1345.4	14685.6	Considerata				Si

Verifica a torsione SLD §4.2.4.1.2.5 NTC18

X	Comb.	Sfruttamento torsione	TEd	TRd	Riduzione taglio resistente	Sfruttamento taglio-torsione	τEd,totale	τRd	Verifica
105.1	SLD 10	0.035	511.1	14685.6	Considerata				Si

Verifica a presso/tenso flessione retta X §§ 4.2.4.1.2.3 - 4.2.4.1.2.6 - 4.2.4.1.2.7 - 4.2.4.1.2.8 NTC18

Verifiche eseguite utilizzando la formula conservativa (6.2) §6.2.1 EN 1993-1-1:2005.

X	Comb.	Sfruttamento	Classe	NEd	NRd	Rid. NRd da VEd	Mx,Ed	Mx,Rd	Rid. Mx,Rd da VEd	Rid. Mx,Rd da NEd	ρx	ρy	Verifica
56.1	SLU 87	0.017	1	1611.1	101662.9	1	-479	642783	1		0	0	Si

Verifica a presso/tenso flessione retta X SLD §§ 4.2.4.1.2.3 - 4.2.4.1.2.6 - 4.2.4.1.2.7 - 4.2.4.1.2.8 NTC18

Verifiche eseguite utilizzando la formula conservativa (6.2) §6.2.1 EN 1993-1-1:2005.

X	Comb.	Sfruttamento	Classe	NEd	NRd	Rid. NRd da VEd	Mx,Ed	Mx,Rd	Rid. Mx,Rd da VEd	Rid. Mx,Rd da NEd	ρx	ρy	Verifica
56.1	SLD 15	0.009	1	843.3	101662.9	1	-369	642783	1		0	0	Si

Verifiche ad instabilità

Caratteristiche iniziali

Membratura principale per controllo snellezza; Calcolo di snellezze ed N critici condotti secondo gli assi principali;
Curva X: b; Curva Y: c; Svergolamento: Carico all'estradosso; Curva svergolamento: b;

Dati per instabilità attorno a x

Numero rit.	Presente	Ascissa	Campata	βx/m	Vincolo a entrambi estremi	λx/m	λVer
1	Si	0					
			1-2	1	Si	16	Si, (<200)
2	Si	105.1					

Dati per instabilità attorno a y

Numero rit.	Presente	Ascissa	Campata	βy/n	k,LT	kw,LT	Vincolo a entrambi estremi	λy/n	λVer
1	Si	0							
			1-2	1	1	1	Si	26.4	Si, (<200)
2	Si	105.1							

Verifica di stabilità a taglio anima Y §4.2.4.1.2.4 [4.2.27] NTC18

η	hw	tw	hw/tw max	Verifica
1.2	13.4	0.6	55.46	Si

Verifica di stabilità a taglio anima Y SLD §4.2.4.1.2.4 [4.2.27] NTC18

η	hw	tw	hw/tw max	Verifica
1.2	13.4	0.6	55.46	Si

Verifiche a deformabilità

Mensola X: No; Mensola Y: No.

Frecce lungo X

Ascissa freccia	Combinazione	Freccia	Luce	L/f	L/f,min	Tipo	Verifica
7	SLE RA 1	0	105.1	10000	250	Totale	Si
7	SLE RA 31	0	105.1	10000	250	Totale	Si
7	SLE RA 30	0	105.1	10000	250	Totale	Si
7	SLE RA 29	0	105.1	10000	250	Totale	Si
7	SLE RA 28	0	105.1	10000	250	Totale	Si
10.5	SLE RA 2	0	105.1	10000	350	Variabile	Si
101.6	SLE RA 31	0	105.1	10000	350	Variabile	Si
101.6	SLE RA 30	0	105.1	10000	350	Variabile	Si
101.6	SLE RA 29	0	105.1	10000	350	Variabile	Si
101.6	SLE RA 28	0	105.1	10000	350	Variabile	Si

Frecce lungo Y

Ascissa freccia	Combinazione	Freccia	Luce	L/f	L/f,min	Tipo	Verifica
52.6	SLE RA 1	0	105.1	10000	250	Totale	Si
52.6	SLE RA 31	0	105.1	10000	250	Totale	Si
52.6	SLE RA 30	0	105.1	10000	250	Totale	Si
52.6	SLE RA 29	0	105.1	10000	250	Totale	Si
52.6	SLE RA 28	0	105.1	10000	250	Totale	Si
14	SLE RA 2	0	105.1	10000	350	Variabile	Si
94.6	SLE RA 31	0	105.1	10000	350	Variabile	Si
94.6	SLE RA 30	0	105.1	10000	350	Variabile	Si
94.6	SLE RA 29	0	105.1	10000	350	Variabile	Si
94.6	SLE RA 28	0	105.1	10000	350	Variabile	Si

Superelemento in acciaio composto dall'asta 135

Caratteristiche del materiale

Acciaio: S275, fyk = 2750

Caratteristiche geometriche

Lunghezza: 105.1
Nodo iniziale: 58 Nodo finale: 85
Cerniera iniziale: Svincolo: M2, M3 Cerniera finale: Svincolo: M2, M3
Sovraresistenza: 0% Sisma Z: No

Caratteristiche della sezione

Sezione	Rotazione	Area	Jx	Jy	ix	iy	Wx	Wy	Wplx	Wply
HEA160	0	38.82	1674.7	615.62	6.57	3.98	220.36	76.95	245.43	117.67

Verifiche di resistenza

Verifiche a forza assiale §4.2.4.1.2.1 - §4.2.4.1.2.2 NTC18

X	Comb.	Sfruttamento	Classe	NEd	Nc,Rd	Nt,Rd	Riduzione da taglio	ρx	ρy	Verifica
105.1	SLU 87	0.016		1616.4		101662.9	1	0	0	Si

Verifiche a forza assiale SLD §4.2.4.1.2.1 - §4.2.4.1.2.2 NTC18

X	Comb.	Sfruttamento	Classe	NEd	Nc,Rd	Nt,Rd	Riduzione da taglio	ρx	ρy	Verifica
105.1	SLD 3	0.008		850.4		101662.9	1	0	0	Si

Verifica a taglio Y §4.2.4.1.2.4 NTC18

X	Comb.	Sfruttamento	VEd	Vc,Rd	Av	Interazione taglio-torsione	Riduzione torsione	Verifica
0	SLU 87	0.001	18.3	20045.7	13.26	Considerata	1	Si

Verifica a taglio Y SLD §4.2.4.1.2.4 NTC18

X	Comb.	Sfruttamento	VEd	Vc,Rd	Av	Interazione taglio-torsione	Riduzione torsione	Verifica
105.1	SLD 6	0.001	-14.1	19764.6	13.26	Considerata	0.99	Si

Verifica a torsione §4.2.4.1.2.5 NTC18

X	Comb.	Sfruttamento torsione	TEd	TRd	Riduzione taglio resistente	Sfruttamento taglio-torsione	τEd,totale	τRd	Verifica
56.1	SLV 5	0.092	-1345.4	14685.6	Considerata				Si

Verifica a torsione SLD §4.2.4.1.2.5 NTC18

X	Comb.	Sfruttamento torsione	TEd	TRd	Riduzione taglio resistente	Sfruttamento taglio-torsione	τEd,totale	τRd	Verifica
56.1	SLD 5	0.035	-511.1	14685.6	Considerata				Si

Verifica a presso/tenso flessione retta X §§ 4.2.4.1.2.3 - 4.2.4.1.2.6 - 4.2.4.1.2.7 - 4.2.4.1.2.8 NTC18

Verifiche eseguite utilizzando la formula conservativa (6.2) §6.2.1 EN 1993-1-1:2005.

X	Comb.	Sfruttamento	Classe	NEd	NRd	Rid. NRd da VEd	Mx,Ed	Mx,Rd	Rid. Mx,Rd da VEd	Rid. Mx,Rd da NEd	ρx	ρy	Verifica
56.1	SLU 120	0.017	1	1607.2	101662.9	1	-479	642783	1		0	0	Si

Verifica a presso/tenso flessione retta X SLD §§ 4.2.4.1.2.3 - 4.2.4.1.2.6 - 4.2.4.1.2.7 - 4.2.4.1.2.8 NTC18

Verifiche eseguite utilizzando la formula conservativa (6.2) §6.2.1 EN 1993-1-1:2005.

X	Comb.	Sfruttamento	Classe	NEd	NRd	Rid. NRd da VEd	Mx,Ed	Mx,Rd	Rid. Mx,Rd da VEd	Rid. Mx,Rd da NEd	ρx	ρy	Verifica
56.1	SLD 3	0.009	1	843.3	101662.9	1	-369	642783	1		0	0	Si

Verifiche ad instabilità

Caratteristiche iniziali

Membratura principale per controllo snellezza; Calcolo di snellezze ed N critici condotti secondo gli assi principali;
Curva X: b; Curva Y: c; Svergolamento: Carico all'estradosso; Curva svergolamento: b;

Dati per instabilità attorno a x

Numero rit.	Presente	Ascissa	Campata	βx/m	Vincolo a entrambi estremi	λx/m	λVer
1	Si	0					
			1-2	1	Si	16	Si, (<200)
2	Si	105.1					

Dati per instabilità attorno a y

Numero rit.	Presente	Ascissa	Campata	βy/n	k,LT	kw,LT	Vincolo a entrambi estremi	λy/n	λVer
1	Si	0							
			1-2	1	1	1	Si	26.4	Si, (<200)
2	Si	105.1							

Verifica di stabilità a taglio anima Y §4.2.4.1.2.4 [4.2.27] NTC18

η	hw	tw	hw/tw max	Verifica
1.2	13.4	0.6	55.46	Si

Verifica di stabilità a taglio anima Y SLD §4.2.4.1.2.4 [4.2.27] NTC18

η	hw	tw	hw/tw max	Verifica
1.2	13.4	0.6	55.46	Si

Verifiche a deformabilità

Mensola X: No; Mensola Y: No.

Frecce lungo X

Ascissa freccia	Combinazione	Freccia	Luce	L/f	L/f,min	Tipo	Verifica
7	SLE RA 1	0	105.1	10000	250	Totale	Si
7	SLE RA 31	0	105.1	10000	250	Totale	Si
7	SLE RA 30	0	105.1	10000	250	Totale	Si
7	SLE RA 29	0	105.1	10000	250	Totale	Si
7	SLE RA 28	0	105.1	10000	250	Totale	Si
10.5	SLE RA 2	0	105.1	10000	350	Variabile	Si
98.1	SLE RA 31	0	105.1	10000	350	Variabile	Si
98.1	SLE RA 30	0	105.1	10000	350	Variabile	Si
98.1	SLE RA 29	0	105.1	10000	350	Variabile	Si
98.1	SLE RA 28	0	105.1	10000	350	Variabile	Si

Frecce lungo Y

Ascissa freccia	Combinazione	Freccia	Luce	L/f	L/f,min	Tipo	Verifica
52.6	SLE RA 1	0	105.1	10000	250	Totale	Si
52.6	SLE RA 31	0	105.1	10000	250	Totale	Si
52.6	SLE RA 30	0	105.1	10000	250	Totale	Si
52.6	SLE RA 29	0	105.1	10000	250	Totale	Si
52.6	SLE RA 28	0	105.1	10000	250	Totale	Si
14	SLE RA 2	0	105.1	10000	350	Variabile	Si
17.5	SLE RA 31	0	105.1	10000	350	Variabile	Si
17.5	SLE RA 30	0	105.1	10000	350	Variabile	Si
101.6	SLE RA 29	0	105.1	10000	350	Variabile	Si
101.6	SLE RA 28	0	105.1	10000	350	Variabile	Si

Superelemento in acciaio composto dall'asta 136

Caratteristiche del materiale

Acciaio: S275, fyk = 2750

Caratteristiche geometriche

Lunghezza: 108.7
Nodo iniziale: 20 Nodo finale: 61
Cerniera iniziale: No Cerniera finale: No
Sovraresistenza: 0% Sisma Z: No

Caratteristiche della sezione

Sezione	Rotazione	Area	Jx	Jy	ix	iy	Wx	Wy	Wplx	Wply
HEA180	0	45.3	2512.55	924.65	7.45	4.52	293.87	102.74	325.17	156.53

Verifiche di resistenza

Verifiche a forza assiale §4.2.4.1.2.1 - §4.2.4.1.2.2 NTC18

X	Comb.	Sfruttamento	Classe	NEd	Nc,Rd	Nt,Rd	Riduzione da taglio	ρx	ρy	Verifica
0	SLU 132	0.226	1	-26848.8	118634.3		1	0	0	Si

Verifiche a forza assiale SLD §4.2.4.1.2.1 - §4.2.4.1.2.2 NTC18

X	Comb.	Sfruttamento	Classe	NEd	Nc,Rd	Nt,Rd	Riduzione da taglio	ρx	ρy	Verifica
0	SLD 14	0.147	1	-17487.8	118634.3		1	0	0	Si

Verifica a taglio X §4.2.4.1.2.4 NTC18

X	Comb.	Sfruttamento	VEd	Vc,Rd	Av	Interazione taglio-torsione	Riduzione torsione	Verifica
108.7	SLV 9	0.002	119.8	54121	36.18	Considerata	0.99	Si

Verifica a taglio X SLD §4.2.4.1.2.4 NTC18

X	Comb.	Sfruttamento	VEd	Vc,Rd	Av	Interazione taglio-torsione	Riduzione torsione	Verifica
0	SLD 9	0.001	45.7	54482.8	36.18	Considerata	1	Si

Verifica a taglio Y §4.2.4.1.2.4 NTC18

X	Comb.	Sfruttamento	VEd	Vc,Rd	Av	Interazione taglio-torsione	Riduzione torsione	Verifica
108.7	SLU 98	0.09	-1976.9	21950.9	14.52	Considerata	1	Si

Verifica a taglio Y SLD §4.2.4.1.2.4 NTC18

X	Comb.	Sfruttamento	VEd	Vc,Rd	Av	Interazione taglio-torsione	Riduzione torsione	Verifica
108.7	SLD 2	0.071	-1556.3	21924.1	14.52	Considerata	1	Si

Verifica a torsione §4.2.4.1.2.5 NTC18

X	Comb.	Sfruttamento torsione	TEd	TRd	Riduzione taglio resistente	Sfruttamento taglio-torsione	τEd,totale	τRd	Verifica
58	SLV 5	0.026	-479.6	18118.1	Considerata				Si

Verifica a torsione SLD §4.2.4.1.2.5 NTC18

X	Comb.	Sfruttamento torsione	TEd	TRd	Riduzione taglio resistente	Sfruttamento taglio-torsione	τEd,totale	τRd	Verifica
58	SLD 5	0.01	-182.1	18118.1	Considerata				Si

Verifica a presso/tenso flessione retta X §§ 4.2.4.1.2.3 - 4.2.4.1.2.6 - 4.2.4.1.2.7 - 4.2.4.1.2.8 NTC18

Verifiche eseguite utilizzando la formula conservativa (6.2) §6.2.1 EN 1993-1-1:2005.

X	Comb.	Sfruttamento	Classe	NEd	NRd	Rid. NRd da VEd	Mx,Ed	Mx,Rd	Rid. Mx,Rd da VEd	Rid. Mx,Rd da NEd	ρx	ρy	Verifica
25.4	SLU 132	0.237	1	-25086.9	118634.3	1	-21737	851642	1		0	0	Si

Verifica a presso/tenso flessione retta X SLD §§ 4.2.4.1.2.3 - 4.2.4.1.2.6 - 4.2.4.1.2.7 - 4.2.4.1.2.8 NTC18

Verifiche eseguite utilizzando la formula conservativa (6.2) §6.2.1 EN 1993-1-1:2005.

X	Comb.	Sfruttamento	Classe	NEd	NRd	Rid. NRd da VEd	Mx,Ed	Mx,Rd	Rid. Mx,Rd da VEd	Rid. Mx,Rd da NEd	ρx	ρy	Verifica
10.9	SLD 14	0.154	1	-16907	118634.3	1	-9798	851642	1		0	0	Si

Verifica a presso/tenso flessione retta Y §§ 4.2.4.1.2.3 - 4.2.4.1.2.6 - 4.2.4.1.2.7 - 4.2.4.1.2.8 NTC18

Verifiche eseguite utilizzando la formula conservativa (6.2) §6.2.1 EN 1993-1-1:2005.

X	Comb.	Sfruttamento	Classe	NEd	NRd	Rid. NRd da VEd	My,Ed	My,Rd	Rid. My,Rd da VEd	Rid. My,Rd da NEd	ρx	ρy	Verifica
0	SLV 9	0.148	1	-17467.6	118634.3	1	-473	409967	1		0	0	Si

Verifica a presso/tenso flessione retta Y SLD §§ 4.2.4.1.2.3 - 4.2.4.1.2.6 - 4.2.4.1.2.7 - 4.2.4.1.2.8 NTC18

Verifiche eseguite utilizzando la formula conservativa (6.2) §6.2.1 EN 1993-1-1:2005.

X	Comb.	Sfruttamento	Classe	NEd	NRd	Rid. NRd da VEd	My,Ed	My,Rd	Rid. My,Rd da VEd	Rid. My,Rd da NEd	ρx	ρy	Verifica
0	SLD 9	0.147	1	-17445.5	118634.3	1	-180	409967	1		0	0	Si

Verifica a presso/tenso flessione deviata §§ 4.2.4.1.2.3 - 4.2.4.1.2.6 - 4.2.4.1.2.7 - 4.2.4.1.2.8 NTC18

Verifiche eseguite utilizzando la formula conservativa (6.2) §6.2.1 EN 1993-1-1:2005.

X	Comb.	Sfruttamento	Classe	NEd	NRd	Rid. NRd da VEd	Mx,Ed	Mx,Rd	My,Ed	My,Rd	Rid. Mx,Rd da VEd	Rid. Mx,Rd da NEd	Rid. My,Rd da VEd	Rid. My,Rd da NEd	α	β	ρx	ρy	Verifica
108.7	SLV 6	0.167	1	-11578.5	118634.3	1	32942	851642	12544	409967	1		1				0	0	Si

Verifica a presso/tenso flessione deviata SLD §§ 4.2.4.1.2.3 - 4.2.4.1.2.6 - 4.2.4.1.2.7 - 4.2.4.1.2.8 NTC18

Verifiche eseguite utilizzando la formula conservativa (6.2) §6.2.1 EN 1993-1-1:2005.

X	Comb.	Sfruttamento	Classe	NEd	NRd	Rid. NRd da VEd	Mx,Ed	Mx,Rd	My,Ed	My,Rd	Rid. Mx,Rd da VEd	Rid. Mx,Rd da NEd	Rid. My,Rd da VEd	Rid. My,Rd da NEd	α	β	ρx	ρy	Verifica
29	SLD 9	0.159	1	-15896.5	118634.3	1	-19038	851642	1143	409967	1		1				0	0	Si

Verifiche ad instabilità

Caratteristiche iniziali

Membratura principale per controllo snellezza; Calcolo di snellezze ed N critici condotti secondo gli assi principali;
Curva X: b; Curva Y: c; Svergolamento: Carico all'estradosso; Curva svergolamento: b;

Dati per instabilità attorno a x

Numero rit.	Presente	Ascissa	Campata	βx/m	Vincolo a entrambi estremi	λx/m	λVer
1	Si	0					
			1-2	1	Si	14.6	Si, (<200)
2	Si	108.7					

Dati per instabilità attorno a y

Numero rit.	Presente	Ascissa	Campata	βy/n	k,LT	kw,LT	Vincolo a entrambi estremi	λy/n	λVer
1	Si	0							
			1-2	1	1	1	Si	24	Si, (<200)

Numero rit.	Presente	Ascissa	Campata	βy/n	k,LT	kw,LT	Vincolo a entrambi estremi	λy/n	λVer
2	Si	108.7							

Verifica di stabilità per pressoflessione §C.4.2.4.1.3.3.2 NTC18

X	Comb.	Sfruttamento	Classe	NEd	NRk	Mx,Ed max	Mx,Rk	My,Ed max	My,Rk	χ,x	χ,y	kxx	kxy	kyx	kyy	χ,LT	Verifica
0	SLU 131	0.277	1	-26848.8	124566	40465.1	894223.7	61.4	430465.2	1	0.961	0.558	0.35	0.877	0.583	1	Si

Verifica di stabilità per pressoflessione SLD §C.4.2.4.1.3.3.2 NTC18

X	Comb.	Sfruttamento	Classe	NEd	NRk	Mx,Ed max	Mx,Rk	My,Ed max	My,Rk	χ,x	χ,y	kxx	kxy	kyx	kyy	χ,LT	Verifica
0	SLD 5	0.191	1	-17409.2	124566	30646.3	894223.7	4780.8	430465.2	1	0.961	0.572	0.348	0.877	0.581	1	Si

Verifica di stabilità a taglio anima Y §4.2.4.1.2.4 [4.2.27] NTC18

η	hw	tw	hw/tw max	Verifica
1.2	15.2	0.6	55.46	Si

Verifica di stabilità a taglio anima Y SLD §4.2.4.1.2.4 [4.2.27] NTC18

η	hw	tw	hw/tw max	Verifica
1.2	15.2	0.6	55.46	Si

Verifiche a deformabilità

Mensola X: No; Mensola Y: No.

Frecce lungo X

Ascissa freccia	Combinazione	Freccia	Luce	L/f	L/f,min	Tipo	Verifica
61.6	SLE RA 1	0	108.7	10000	250	Totale	Si
61.6	SLE RA 31	0	108.7	10000	250	Totale	Si
61.6	SLE RA 30	0	108.7	10000	250	Totale	Si
61.6	SLE RA 29	0	108.7	10000	250	Totale	Si
61.6	SLE RA 28	0	108.7	10000	250	Totale	Si
61.6	SLE RA 2	0	108.7	10000	350	Variabile	Si
61.6	SLE RA 31	0	108.7	10000	350	Variabile	Si
61.6	SLE RA 30	0	108.7	10000	350	Variabile	Si
61.6	SLE RA 29	0	108.7	10000	350	Variabile	Si
61.6	SLE RA 28	0	108.7	10000	350	Variabile	Si

Frecce lungo Y

Ascissa freccia	Combinazione	Freccia	Luce	L/f	L/f,min	Tipo	Verifica
50.7	SLE RA 1	-0.008	108.7	10000	250	Totale	Si
50.7	SLE RA 31	-0.008	108.7	10000	250	Totale	Si
50.7	SLE RA 30	-0.008	108.7	10000	250	Totale	Si
50.7	SLE RA 29	-0.008	108.7	10000	250	Totale	Si
50.7	SLE RA 28	-0.008	108.7	10000	250	Totale	Si
61.6	SLE RA 2	0	108.7	10000	350	Variabile	Si
61.6	SLE RA 31	0	108.7	10000	350	Variabile	Si
61.6	SLE RA 30	0	108.7	10000	350	Variabile	Si
61.6	SLE RA 29	0	108.7	10000	350	Variabile	Si
61.6	SLE RA 28	0	108.7	10000	350	Variabile	Si

Superelemento in acciaio composto dall'asta 137

Caratteristiche del materiale

Acciaio: S275, fyk = 2750

Caratteristiche geometriche

Lunghezza: 108.7
Nodo iniziale: 21 Nodo finale: 64
Cerniera iniziale: No Cerniera finale: No
Sovraresistenza: 0% Sisma Z: No

Caratteristiche della sezione

Sezione	Rotazione	Area	Jx	Jy	ix	iy	Wx	Wy	Wplx	Wply
HEA180	0	45.3	2512.55	924.65	7.45	4.52	293.87	102.74	325.17	156.53

Verifiche di resistenza

Verifiche a forza assiale §4.2.4.1.2.1 - §4.2.4.1.2.2 NTC18

X	Comb.	Sfruttamento	Classe	NEd	Nc,Rd	Nt,Rd	Riduzione da taglio	ρx	ρy	Verifica
0	SLU 99	0.226	1	-26835.5	118634.3		1	0	0	Si

Verifiche a forza assiale SLD §4.2.4.1.2.1 - §4.2.4.1.2.2 NTC18

X	Comb.	Sfruttamento	Classe	NEd	Nc,Rd	Nt,Rd	Riduzione da taglio	ρx	ρy	Verifica
0	SLD 1	0.147	1	-17487.8	118634.3		1	0	0	Si

Verifica a taglio X §4.2.4.1.2.4 NTC18

X	Comb.	Sfruttamento	VEd	Vc,Rd	Av	Interazione taglio-torsione	Riduzione torsione	Verifica
108.7	SLV 5	0.002	-119.8	54121	36.18	Considerata	0.99	Si

Verifica a taglio X SLD §4.2.4.1.2.4 NTC18

X	Comb.	Sfruttamento	VEd	Vc,Rd	Av	Interazione taglio-torsione	Riduzione torsione	Verifica
0	SLD 5	0.001	-45.7	54482.8	36.18	Considerata	1	Si

Verifica a taglio Y §4.2.4.1.2.4 NTC18

X	Comb.	Sfruttamento	VEd	Vc,Rd	Av	Interazione taglio-torsione	Riduzione torsione	Verifica
108.7	SLU 98	0.09	-1976.9	21950.9	14.52	Considerata	1	Si

Verifica a taglio Y SLD §4.2.4.1.2.4 NTC18

X	Comb.	Sfruttamento	VEd	Vc,Rd	Av	Interazione taglio-torsione	Riduzione torsione	Verifica
108.7	SLD 14	0.071	-1556.3	21924.1	14.52	Considerata	1	Si

Verifica a torsione §4.2.4.1.2.5 NTC18

X	Comb.	Sfruttamento torsione	TEd	TRd	Riduzione taglio resistente	Sfruttamento taglio-torsione	τEd,totale	τRd	Verifica
108.7	SLV 10	0.026	479.6	18118.1	Considerata				Si

Verifica a torsione SLD §4.2.4.1.2.5 NTC18

X	Comb.	Sfruttamento torsione	TEd	TRd	Riduzione taglio resistente	Sfruttamento taglio-torsione	τEd,totale	τRd	Verifica
108.7	SLD 10	0.01	182.1	18118.1	Considerata				Si

Verifica a presso/tenso flessione retta X §§ 4.2.4.1.2.3 - 4.2.4.1.2.6 - 4.2.4.1.2.7 - 4.2.4.1.2.8 NTC18

Verifiche eseguite utilizzando la formula conservativa (6.2) §6.2.1 EN 1993-1-1:2005.

X	Comb.	Sfruttamento	Classe	NEd	NRd	Rid. NRd da VEd	Mx,Ed	Mx,Rd	Rid. Mx,Rd da VEd	Rid. Mx,Rd da NEd	ρx	ρy	Verifica
25.4	SLU 99	0.237	1	-25073.6	118634.3	1	-21737	851642	1		0	0	Si

Verifica a presso/tenso flessione retta X SLD §§ 4.2.4.1.2.3 - 4.2.4.1.2.6 - 4.2.4.1.2.7 - 4.2.4.1.2.8 NTC18

Verifiche eseguite utilizzando la formula conservativa (6.2) §6.2.1 EN 1993-1-1:2005.

X	Comb.	Sfruttamento	Classe	NEd	NRd	Rid. NRd da VEd	Mx,Ed	Mx,Rd	Rid. Mx,Rd da VEd	Rid. Mx,Rd da NEd	ρx	ρy	Verifica
10.9	SLD 1	0.154	1	-16907	118634.3	1	-9798	851642	1		0	0	Si

Verifica a presso/tenso flessione retta Y §§ 4.2.4.1.2.3 - 4.2.4.1.2.6 - 4.2.4.1.2.7 - 4.2.4.1.2.8 NTC18

Verifiche eseguite utilizzando la formula conservativa (6.2) §6.2.1 EN 1993-1-1:2005.

X	Comb.	Sfruttamento	Classe	NEd	NRd	Rid. NRd da VEd	My,Ed	My,Rd	Rid. My,Rd da VEd	Rid. My,Rd da NEd	ρx	ρy	Verifica
0	SLV 5	0.148	1	-17467.6	118634.3	1	473	409967	1		0	0	Si

Verifica a presso/tenso flessione retta Y SLD §§ 4.2.4.1.2.3 - 4.2.4.1.2.6 - 4.2.4.1.2.7 - 4.2.4.1.2.8 NTC18

Verifiche eseguite utilizzando la formula conservativa (6.2) §6.2.1 EN 1993-1-1:2005.

X	Comb.	Sfruttamento	Classe	NEd	NRd	Rid. NRd da VEd	My,Ed	My,Rd	Rid. My,Rd da VEd	Rid. My,Rd da NEd	ρx	ρy	Verifica
0	SLD 5	0.147	1	-17445.5	118634.3	1	180	409967	1		0	0	Si

Verifica a presso/tenso flessione deviata §§ 4.2.4.1.2.3 - 4.2.4.1.2.6 - 4.2.4.1.2.7 - 4.2.4.1.2.8 NTC18

Verifiche eseguite utilizzando la formula conservativa (6.2) §6.2.1 EN 1993-1-1:2005.

X	Comb.	Sfruttamento	Classe	NEd	NRd	Rid. NRd da VEd	Mx,Ed	Mx,Rd	My,Ed	My,Rd	Rid. Mx,Rd da VEd	Rid. Mx,Rd da NEd	Rid. My,Rd da VEd	Rid. My,Rd da NEd	α	β	ρx	ρy	Verifica
108.7	SLV 10	0.167	1	-11578.5	118634.3	1	32942	851642	-12544	409967	1		1				0	0	Si

Verifica a presso/tenso flessione deviata SLD §§ 4.2.4.1.2.3 - 4.2.4.1.2.6 - 4.2.4.1.2.7 - 4.2.4.1.2.8 NTC18

Verifiche eseguite utilizzando la formula conservativa (6.2) §6.2.1 EN 1993-1-1:2005.

X	Comb.	Sfruttamento	Classe	NEd	NRd	Rid. NRd da VEd	Mx,Ed	Mx,Rd	My,Ed	My,Rd	Rid. Mx,Rd da VEd	Rid. Mx,Rd da NEd	Rid. My,Rd da VEd	Rid. My,Rd da NEd	α	β	ρx	ρy	Verifica
29	SLD 6	0.159	1	-15896.5	118634.3	1	-19038	851642	-1143	409967	1		1				0	0	Si

Verifiche ad instabilità

Caratteristiche iniziali

Membratura principale per controllo snellezza; Calcolo di snellezze ed N critici condotti secondo gli assi principali;
Curva X: b; Curva Y: c; Svergolamento: Carico all'estradosso; Curva svergolamento: b;

Dati per instabilità attorno a x

Numero rit.	Presente	Ascissa	Campata	βx/m	Vincolo a entrambi estremi	λx/m	λVer
1	Si	0					
			1-2	1	Si	14.6	Si, (<200)
2	Si	108.7					

Dati per instabilità attorno a y

Numero rit.	Presente	Ascissa	Campata	βy/n	k,LT	kw,LT	Vincolo a entrambi estremi	λy/n	λVer
1	Si	0							
			1-2	1	1	1	Si	24	Si, (<200)
2	Si	108.7							

Verifica di stabilità per pressoflessione §C.4.2.4.1.3.3.2 NTC18

X	Comb.	Sfruttamento	Classe	NEd	NRk	Mx,Ed max	Mx,Rk	My,Ed max	My,Rk	χ,x	χ,y	kxx	kxy	kyx	kyy	χ,LT	Verifica
0	SLU 131	0.277	1	-26835.5	124566	40463.6	894223.7	61.2	430465.2	1	0.961	0.558	0.35	0.877	0.583	1	Si

Verifica di stabilità per pressoflessione SLD §C.4.2.4.1.3.3.2 NTC18

X	Comb.	Sfruttamento	Classe	NEd	NRk	Mx,Ed max	Mx,Rk	My,Ed max	My,Rk	χ,x	χ,y	kxx	kxy	kyx	kyy	χ,LT	Verifica
0	SLD 10	0.191	1	-17409.2	124566	30646.3	894223.7	4780.8	430465.2	1	0.961	0.572	0.348	0.877	0.581	1	Si

Verifica di stabilità a taglio anima Y §4.2.4.1.2.4 [4.2.27] NTC18

η	hw	tw	hw/tw max	Verifica
1.2	15.2	0.6	55.46	Si

Verifica di stabilità a taglio anima Y SLD §4.2.4.1.2.4 [4.2.27] NTC18

η	hw	tw	hw/tw max	Verifica
1.2	15.2	0.6	55.46	Si

Verifiche a deformabilità

Mensola X: No; Mensola Y: No.

Frecce lungo X

Ascissa freccia	Combinazione	Freccia	Luce	L/f	L/f,min	Tipo	Verifica
61.6	SLE RA 1	0	108.7	10000	250	Totale	Si
61.6	SLE RA 31	0	108.7	10000	250	Totale	Si
61.6	SLE RA 30	0	108.7	10000	250	Totale	Si
61.6	SLE RA 29	0	108.7	10000	250	Totale	Si
61.6	SLE RA 28	0	108.7	10000	250	Totale	Si
61.6	SLE RA 2	0	108.7	10000	350	Variabile	Si
61.6	SLE RA 31	0	108.7	10000	350	Variabile	Si
61.6	SLE RA 30	0	108.7	10000	350	Variabile	Si
61.6	SLE RA 29	0	108.7	10000	350	Variabile	Si
61.6	SLE RA 28	0	108.7	10000	350	Variabile	Si

Frecce lungo Y

Ascissa freccia	Combinazione	Freccia	Luce	L/f	L/f,min	Tipo	Verifica
50.7	SLE RA 1	-0.008	108.7	10000	250	Totale	Si
50.7	SLE RA 31	-0.008	108.7	10000	250	Totale	Si
50.7	SLE RA 30	-0.008	108.7	10000	250	Totale	Si
50.7	SLE RA 29	-0.008	108.7	10000	250	Totale	Si
50.7	SLE RA 28	-0.008	108.7	10000	250	Totale	Si
61.6	SLE RA 2	0	108.7	10000	350	Variabile	Si
61.6	SLE RA 31	0	108.7	10000	350	Variabile	Si
61.6	SLE RA 30	0	108.7	10000	350	Variabile	Si
61.6	SLE RA 29	0	108.7	10000	350	Variabile	Si
61.6	SLE RA 28	0	108.7	10000	350	Variabile	Si

Superelemento in acciaio composto dall'asta 138

Caratteristiche del materiale

Acciaio: S275, fyk = 2750

Caratteristiche geometriche

Lunghezza: 74.7
Nodo iniziale: 61 Nodo finale: 87
Cerniera iniziale: No Cerniera finale: No
Sovraresistenza: 0% Sisma Z: No

Caratteristiche della sezione

Sezione	Rotazione	Area	Jx	Jy	ix	iy	Wx	Wy	Wplx	Wply
HEA180	0	45.3	2512.55	924.65	7.45	4.52	293.87	102.74	325.17	156.53

Verifiche di resistenza

Verifiche a forza assiale §4.2.4.1.2.1 - §4.2.4.1.2.2 NTC18

X	Comb.	Sfruttamento	Classe	NEd	Nc,Rd	Nt,Rd	Riduzione da taglio	ρx	ρy	Verifica
0	SLU 131	0.244	1	-28988.5	118634.3		1	0	0	Si

Verifiche a forza assiale SLD §4.2.4.1.2.1 - §4.2.4.1.2.2 NTC18

X	Comb.	Sfruttamento	Classe	NEd	Nc,Rd	Nt,Rd	Riduzione da taglio	ρx	ρy	Verifica
0	SLD 3	0.156	1	-18478.8	118634.3		1	0	0	Si

Verifica a taglio X §4.2.4.1.2.4 NTC18

X	Comb.	Sfruttamento	VEd	Vc,Rd	Av	Interazione taglio-torsione	Riduzione torsione	Verifica
74.7	SLV 10	0.004	-201.8	49131.9	36.18	Considerata	0.9	Si

Verifica a taglio X SLD §4.2.4.1.2.4 NTC18

X	Comb.	Sfruttamento	VEd	Vc,Rd	Av	Interazione taglio-torsione	Riduzione torsione	Verifica
0	SLD 9	0.001	-77.4	52647.8	36.18	Considerata	0.96	Si

Verifica a taglio Y §4.2.4.1.2.4 NTC18

X	Comb.	Sfruttamento	VEd	Vc,Rd	Av	Interazione taglio-torsione	Riduzione torsione	Verifica
74.7	SLU 132	0.198	-4346.2	21938.8	14.52	Considerata	1	Si

Verifica a taglio Y SLD §4.2.4.1.2.4 NTC18

X	Comb.	Sfruttamento	VEd	Vc,Rd	Av	Interazione taglio-torsione	Riduzione torsione	Verifica
74.7	SLD 1	0.15	-3251.1	21701.3	14.52	Considerata	0.99	Si

Verifica a torsione §4.2.4.1.2.5 NTC18

X	Comb.	Sfruttamento torsione	TEd	TRd	Riduzione taglio resistente	Sfruttamento taglio-torsione	τEd,totale	τRd	Verifica
74.7	SLV 9	0.242	4378.1	18118.1	Considerata				Si

Verifica a torsione SLD §4.2.4.1.2.5 NTC18

X	Comb.	Sfruttamento torsione	TEd	TRd	Riduzione taglio resistente	Sfruttamento taglio-torsione	τEd,totale	τRd	Verifica
74.7	SLD 10	0.092	1669.9	18118.1	Considerata				Si

Verifica a presso/tenso flessione retta X §§ 4.2.4.1.2.3 - 4.2.4.1.2.6 - 4.2.4.1.2.7 - 4.2.4.1.2.8 NTC18

Verifiche eseguite utilizzando la formula conservativa (6.2) §6.2.1 EN 1993-1-1:2005.

X	Comb.	Sfruttamento	Classe	NEd	NRd	Rid. NRd da VEd	Mx,Ed	Mx,Rd	Rid. Mx,Rd da VEd	Rid. Mx,Rd da NEd	ρx	ρy	Verifica
74.7	SLU 91	0.447	1	-24506.8	118634.3	1	205025	851642	1		0	0	Si

Verifica a presso/tenso flessione retta X SLD §§ 4.2.4.1.2.3 - 4.2.4.1.2.6 - 4.2.4.1.2.7 - 4.2.4.1.2.8 NTC18

Verifiche eseguite utilizzando la formula conservativa (6.2) §6.2.1 EN 1993-1-1:2005.

X	Comb.	Sfruttamento	Classe	NEd	NRd	Rid. NRd da VEd	Mx,Ed	Mx,Rd	Rid. Mx,Rd da VEd	Rid. Mx,Rd da NEd	ρx	ρy	Verifica
62.3	SLD 3	0.277	1	-16058.6	118634.3	1	120291	851642	1		0	0	Si

Verifica a presso/tenso flessione retta Y §§ 4.2.4.1.2.3 - 4.2.4.1.2.6 - 4.2.4.1.2.7 - 4.2.4.1.2.8 NTC18

Verifiche eseguite utilizzando la formula conservativa (6.2) §6.2.1 EN 1993-1-1:2005.

X	Comb.	Sfruttamento	Classe	NEd	NRd	Rid. NRd da VEd	My,Ed	My,Rd	Rid. My,Rd da VEd	Rid. My,Rd da NEd	ρx	ρy	Verifica
19.9	SLV 13	0.132	1	-15048.7	118634.3	1	2184	409967	1		0	0	Si

Verifica a presso/tenso flessione deviata §§ 4.2.4.1.2.3 - 4.2.4.1.2.6 - 4.2.4.1.2.7 - 4.2.4.1.2.8 NTC18

Verifiche eseguite utilizzando la formula conservativa (6.2) §6.2.1 EN 1993-1-1:2005.

X	Comb.	Sfruttamento	Classe	NEd	NRd	Rid. NRd da VEd	Mx,Ed	Mx,Rd	My,Ed	My,Rd	Rid. Mx,Rd da VEd	Rid. Mx,Rd da NEd	Rid. My,Rd da VEd	Rid. My,Rd da NEd	α	β	ρx	ρy	Verifica
74.7	SLU 99	0.458	1	-25212.9	118634.3	1	208583	851642	-105	409967	1		1				0	0	Si

Verifica a presso/tenso flessione deviata SLD §§ 4.2.4.1.2.3 - 4.2.4.1.2.6 - 4.2.4.1.2.7 - 4.2.4.1.2.8 NTC18

Verifiche eseguite utilizzando la formula conservativa (6.2) §6.2.1 EN 1993-1-1:2005.

X	Comb.	Sfruttamento	Classe	NEd	NRd	Rid. NRd da VEd	Mx,Ed	Mx,Rd	My,Ed	My,Rd	Rid. Mx,Rd da VEd	Rid. Mx,Rd da NEd	Rid. My,Rd da VEd	Rid. My,Rd da NEd	α	β	ρx	ρy	Verifica
74.7	SLD 2	0.317	1	-15574.5	118634.3	1	157423	851642	-493	409967	1		1				0	0	Si

Verifiche ad instabilità

Caratteristiche iniziali

Membratura principale per controllo snellezza; Calcolo di snellezze ed N critici condotti secondo gli assi principali;
Curva X: b; Curva Y: c; Svergolamento: Carico all'estradosso; Curva svergolamento: b;

Dati per instabilità attorno a x

Numero rit.	Presente	Ascissa	Campata	βx/m	Vincolo a entrambi estremi	λx/m	λVer
1	Si	0					
			1-2	1	Si	10	Si, (<200)
2	Si	74.7					

Dati per instabilità attorno a y

Numero rit.	Presente	Ascissa	Campata	βy/n	k,LT	kw,LT	Vincolo a entrambi estremi	λy/n	λVer
1	Si	0							
			1-2	1	1	1	Si	16.5	Si, (<200)
2	Si	74.7							

Verifica di stabilità per pressoflessione §C.4.2.4.1.3.3.2 NTC18

X	Comb.	Sfruttamento	Classe	NEd	NRk	Mx,Ed max	Mx,Rk	My,Ed max	My,Rk	χ,x	χ,y	kxx	kxy	kyx	kyy	χ,LT	Verifica
0	SLU 99	0.438	1	-28988.5	124566	208582.9	894223.7	104.6	430465.2	1	1	0.517	0.227	0.79	0.379	1	Si

Verifica di stabilità per pressoflessione SLD §C.4.2.4.1.3.3.2 NTC18

X	Comb.	Sfruttamento	Classe	NEd	NRk	Mx,Ed max	Mx,Rk	My,Ed max	My,Rk	χ,x	χ,y	kxx	kxy	kyx	kyy	χ,LT	Verifica
0	SLD 4	0.303	1	-18478.8	124566	157422.9	894223.7	1244.8	430465.2	1	1	0.529	0.281	0.79	0.469	1	Si

Verifica di stabilità a taglio anima Y §4.2.4.1.2.4 [4.2.27] NTC18

η	hw	tw	hw/tw max	Verifica
1.2	15.2	0.6	55.46	Si

Verifica di stabilità a taglio anima Y SLD §4.2.4.1.2.4 [4.2.27] NTC18

η	hw	tw	hw/tw max	Verifica
1.2	15.2	0.6	55.46	Si

Verifiche a deformabilità

Mensola X: No; Mensola Y: No.

Frecce lungo X

Ascissa freccia	Combinazione	Freccia	Luce	L/f	L/f,min	Tipo	Verifica
49.8	SLE RA 1	0	74.7	10000	250	Totale	Si
49.8	SLE RA 31	0	74.7	10000	250	Totale	Si
49.8	SLE RA 30	0	74.7	10000	250	Totale	Si
49.8	SLE RA 29	0	74.7	10000	250	Totale	Si

Ascissa freccia	Combinazione	Freccia	Luce	L/f	L/f,min	Tipo	Verifica
49.8	SLE RA 28	0	74.7	10000	250	Totale	Si
34.9	SLE RA 2	0	74.7	10000	350	Variabile	Si
49.8	SLE RA 31	0	74.7	10000	350	Variabile	Si
49.8	SLE RA 30	0	74.7	10000	350	Variabile	Si
49.8	SLE RA 29	0	74.7	10000	350	Variabile	Si
49.8	SLE RA 28	0	74.7	10000	350	Variabile	Si

Frecce lungo Y

Ascissa freccia	Combinazione	Freccia	Luce	L/f	L/f,min	Tipo	Verifica
49.8	SLE RA 1	0.003	74.7	10000	250	Totale	Si
47.3	SLE RA 31	0.005	74.7	10000	250	Totale	Si
47.3	SLE RA 30	0.005	74.7	10000	250	Totale	Si
47.3	SLE RA 29	0.005	74.7	10000	250	Totale	Si
47.3	SLE RA 28	0.005	74.7	10000	250	Totale	Si
32.4	SLE RA 2	0	74.7	10000	350	Variabile	Si
42.3	SLE RA 31	0.002	74.7	10000	350	Variabile	Si
42.3	SLE RA 30	0.002	74.7	10000	350	Variabile	Si
42.3	SLE RA 29	0.002	74.7	10000	350	Variabile	Si
42.3	SLE RA 28	0.002	74.7	10000	350	Variabile	Si

Superelemento in acciaio composto dall'asta 139

Caratteristiche del materiale

Acciaio: S275, fyk = 2750

Caratteristiche geometriche

Lunghezza: 74.7
Nodo iniziale: 64 Nodo finale: 88
Cerniera iniziale: No Cerniera finale: No
Sovraresistenza: 0% Sisma Z: No

Caratteristiche della sezione

Sezione	Rotazione	Area	Jx	Jy	ix	iy	Wx	Wy	Wplx	Wply
HEA180	0	45.3	2512.55	924.65	7.45	4.52	293.87	102.74	325.17	156.53

Verifiche di resistenza

Verifiche a forza assiale §4.2.4.1.2.1 - §4.2.4.1.2.2 NTC18

X	Comb.	Sfruttamento	Classe	NEd	Nc,Rd	Nt,Rd	Riduzione da taglio	ρx	ρy	Verifica
0	SLU 131	0.244	1	-28974.8	118634.3		1	0	0	Si

Verifiche a forza assiale SLD §4.2.4.1.2.1 - §4.2.4.1.2.2 NTC18

X	Comb.	Sfruttamento	Classe	NEd	Nc,Rd	Nt,Rd	Riduzione da taglio	ρx	ρy	Verifica
0	SLD 15	0.156	1	-18478.8	118634.3		1	0	0	Si

Verifica a taglio X §4.2.4.1.2.4 NTC18

X	Comb.	Sfruttamento	VEd	Vc,Rd	Av	Interazione taglio-torsione	Riduzione torsione	Verifica
39.8	SLV 5	0.004	201.8	49131.9	36.18	Considerata	0.9	Si

Verifica a taglio X SLD §4.2.4.1.2.4 NTC18

X	Comb.	Sfruttamento	VEd	Vc,Rd	Av	Interazione taglio-torsione	Riduzione torsione	Verifica
0	SLD 5	0.001	77.4	52647.8	36.18	Considerata	0.96	Si

Verifica a taglio Y §4.2.4.1.2.4 NTC18

X	Comb.	Sfruttamento	VEd	Vc,Rd	Av	Interazione taglio-torsione	Riduzione torsione	Verifica
74.7	SLU 132	0.198	-4345.5	21938.8	14.52	Considerata	1	Si

Verifica a taglio Y SLD §4.2.4.1.2.4 NTC18

X	Comb.	Sfruttamento	VEd	Vc,Rd	Av	Interazione taglio-torsione	Riduzione torsione	Verifica
74.7	SLD 14	0.15	-3251.1	21701.3	14.52	Considerata	0.99	Si

Verifica a torsione §4.2.4.1.2.5 NTC18

X	Comb.	Sfruttamento torsione	TEd	TRd	Riduzione taglio resistente	Sfruttamento taglio-torsione	τEd,totale	τRd	Verifica
74.7	SLV 6	0.242	-4378.1	18118.1	Considerata				Si

Verifica a torsione SLD §4.2.4.1.2.5 NTC18

X	Comb.	Sfruttamento torsione	TEd	TRd	Riduzione taglio resistente	Sfruttamento taglio-torsione	τEd,totale	τRd	Verifica
39.8	SLD 5	0.092	-1669.9	18118.1	Considerata				Si

Verifica a presso/tenso flessione retta X §§ 4.2.4.1.2.3 - 4.2.4.1.2.6 - 4.2.4.1.2.7 - 4.2.4.1.2.8 NTC18

Verifiche eseguite utilizzando la formula conservativa (6.2) §6.2.1 EN 1993-1-1:2005.

X	Comb.	Sfruttamento	Classe	NEd	NRd	Rid. NRd da VEd	Mx,Ed	Mx,Rd	Rid. Mx,Rd da VEd	Rid. Mx,Rd da NEd	ρx	ρy	Verifica
74.7	SLU 91	0.447	1	-24497.1	118634.3	1	204990	851642	1		0	0	Si

Verifica a presso/tenso flessione retta X SLD §§ 4.2.4.1.2.3 - 4.2.4.1.2.6 - 4.2.4.1.2.7 - 4.2.4.1.2.8 NTC18

Verifiche eseguite utilizzando la formula conservativa (6.2) §6.2.1 EN 1993-1-1:2005.

X	Comb.	Sfruttamento	Classe	NEd	NRd	Rid. NRd da VEd	Mx,Ed	Mx,Rd	Rid. Mx,Rd da VEd	Rid. Mx,Rd da NEd	ρx	ρy	Verifica
62.3	SLD 16	0.277	1	-16058.6	118634.3	1	120291	851642	1		0	0	Si

Verifica a presso/tenso flessione retta Y §§ 4.2.4.1.2.3 - 4.2.4.1.2.6 - 4.2.4.1.2.7 - 4.2.4.1.2.8 NTC18

Verifiche eseguite utilizzando la formula conservativa (6.2) §6.2.1 EN 1993-1-1:2005.

X	Comb.	Sfruttamento	Classe	NEd	NRd	Rid. NRd da VEd	My,Ed	My,Rd	Rid. My,Rd da VEd	Rid. My,Rd da NEd	ρx	ρy	Verifica
19.9	SLV 1	0.132	1	-15048.7	118634.3	1	-2184	409967	1		0	0	Si

Verifica a presso/tenso flessione deviata §§ 4.2.4.1.2.3 - 4.2.4.1.2.6 - 4.2.4.1.2.7 - 4.2.4.1.2.8 NTC18

Verifiche eseguite utilizzando la formula conservativa (6.2) §6.2.1 EN 1993-1-1:2005.

X	Comb.	Sfruttamento	Classe	NEd	NRd	Rid. NRd da VEd	Mx,Ed	Mx,Rd	My,Ed	My,Rd	Rid. Mx,Rd da VEd	Rid. Mx,Rd da NEd	Rid. My,Rd da VEd	Rid. My,Rd da NEd	α	β	ρx	ρy	Verifica
74.7	SLU 99	0.458	1	-25199.3	118634.3	1	208534	851642	105	409967	1		1				0	0	Si

Verifica a presso/tenso flessione deviata SLD §§ 4.2.4.1.2.3 - 4.2.4.1.2.6 - 4.2.4.1.2.7 - 4.2.4.1.2.8 NTC18

Verifiche eseguite utilizzando la formula conservativa (6.2) §6.2.1 EN 1993-1-1:2005.

X	Comb.	Sfruttamento	Classe	NEd	NRd	Rid. NRd da VEd	Mx,Ed	Mx,Rd	My,Ed	My,Rd	Rid. Mx,Rd da VEd	Rid. Mx,Rd da NEd	Rid. My,Rd da VEd	Rid. My,Rd da NEd	α	β	ρx	ρy	Verifica
74.7	SLD 14	0.317	1	-15574.5	118634.3	1	157423	851642	493	409967	1		1				0	0	Si

Verifiche ad instabilità

Caratteristiche iniziali

Membratura principale per controllo snellezza; Calcolo di snellezze ed N critici condotti secondo gli assi principali;
Curva X: b; Curva Y: c; Svergolamento: Carico all'estradosso; Curva svergolamento: b;

Dati per instabilità attorno a x

Numero rit.	Presente	Ascissa	Campata	βx/m	Vincolo a entrambi estremi	λx/m	λVer
1	Si	0					
			1-2	1	Si	10	Si, (<200)
2	Si	74.7					

Dati per instabilità attorno a y

Numero rit.	Presente	Ascissa	Campata	βy/n	k,LT	kw,LT	Vincolo a entrambi estremi	λy/n	λVer
1	Si	0							
			1-2	1	1	1	Si	16.5	Si, (<200)
2	Si	74.7							

Verifica di stabilità per pressoflessione §C.4.2.4.1.3.3.2 NTC18

X	Comb.	Sfruttamento	Classe	NEd	NRk	Mx,Ed max	Mx,Rk	My,Ed max	My,Rk	χ,x	χ,y	kxx	kxy	kyx	kyy	χ,LT	Verifica
0	SLU 99	0.438	1	-28974.8	124566	208533.7	894223.7	104.5	430465.2	1	1	0.517	0.227	0.79	0.379	1	Si

Verifica di stabilità per pressoflessione SLD §C.4.2.4.1.3.3.2 NTC18

X	Comb.	Sfruttamento	Classe	NEd	NRk	Mx,Ed max	Mx,Rk	My,Ed max	My,Rk	χ,x	χ,y	kxx	kxy	kyx	kyy	χ,LT	Verifica
0	SLD 15	0.303	1	-18478.8	124566	157422.9	894223.7	1244.8	430465.2	1	1	0.529	0.281	0.79	0.469	1	Si

Verifica di stabilità a taglio anima Y §4.2.4.1.2.4 [4.2.27] NTC18

η	hw	tw	hw/tw max	Verifica
1.2	15.2	0.6	55.46	Si

Verifica di stabilità a taglio anima Y SLD §4.2.4.1.2.4 [4.2.27] NTC18

η	hw	tw	hw/tw max	Verifica
1.2	15.2	0.6	55.46	Si

Verifiche a deformabilità

Mensola X: No; Mensola Y: No.

Frecce lungo X

Ascissa freccia	Combinazione	Freccia	Luce	L/f	L/f,min	Tipo	Verifica
49.8	SLE RA 1	0	74.7	10000	250	Totale	Si
49.8	SLE RA 31	0	74.7	10000	250	Totale	Si
49.8	SLE RA 30	0	74.7	10000	250	Totale	Si
49.8	SLE RA 29	0	74.7	10000	250	Totale	Si
49.8	SLE RA 28	0	74.7	10000	250	Totale	Si
34.9	SLE RA 2	0	74.7	10000	350	Variabile	Si
49.8	SLE RA 31	0	74.7	10000	350	Variabile	Si
49.8	SLE RA 30	0	74.7	10000	350	Variabile	Si
49.8	SLE RA 29	0	74.7	10000	350	Variabile	Si
49.8	SLE RA 28	0	74.7	10000	350	Variabile	Si

Frecce lungo Y

Ascissa freccia	Combinazione	Freccia	Luce	L/f	L/f,min	Tipo	Verifica
49.8	SLE RA 1	0.003	74.7	10000	250	Totale	Si
47.3	SLE RA 31	0.005	74.7	10000	250	Totale	Si
47.3	SLE RA 30	0.005	74.7	10000	250	Totale	Si
47.3	SLE RA 29	0.005	74.7	10000	250	Totale	Si
47.3	SLE RA 28	0.005	74.7	10000	250	Totale	Si
32.4	SLE RA 2	0	74.7	10000	350	Variabile	Si
42.3	SLE RA 31	0.002	74.7	10000	350	Variabile	Si
42.3	SLE RA 30	0.002	74.7	10000	350	Variabile	Si
42.3	SLE RA 29	0.002	74.7	10000	350	Variabile	Si
42.3	SLE RA 28	0.002	74.7	10000	350	Variabile	Si

Superelemento in acciaio composto dall'asta 140

Caratteristiche del materiale

Acciaio: S275, fyk = 2750

Caratteristiche geometriche

Lunghezza: 78.5
Nodo iniziale: 87 Nodo finale: 109
Cerniera iniziale: No Cerniera finale: No
Sovraresistenza: 0% Sisma Z: No

Caratteristiche della sezione

Sezione	Rotazione	Area	Jx	Jy	ix	iy	Wx	Wy	Wplx	Wply
HEA180	0	45.3	2512.55	924.65	7.45	4.52	293.87	102.74	325.17	156.53

Verifiche di resistenza

Verifiche a forza assiale §4.2.4.1.2.1 - §4.2.4.1.2.2 NTC18

X	Comb.	Sfruttamento	Classe	NEd	Nc,Rd	Nt,Rd	Riduzione da taglio	ρx	ρy	Verifica
0	SLU 131	0.218	1	-25852.6	118634.3		1	0	0	Si

Verifiche a forza assiale SLD §4.2.4.1.2.1 - §4.2.4.1.2.2 NTC18

X	Comb.	Sfruttamento	Classe	NEd	Nc,Rd	Nt,Rd	Riduzione da taglio	ρx	ρy	Verifica
0	SLD 3	0.135	1	-15957.2	118634.3		1	0	0	Si

Verifica a taglio X §4.2.4.1.2.4 NTC18

X	Comb.	Sfruttamento	VEd	Vc,Rd	Av	Interazione taglio-torsione	Riduzione torsione	Verifica
78.5	SLV 12	0.002	106.8	50016.1	36.18	Considerata	0.91	Si

Verifica a taglio X SLD §4.2.4.1.2.4 NTC18

X	Comb.	Sfruttamento	VEd	Vc,Rd	Av	Interazione taglio-torsione	Riduzione torsione	Verifica
78.5	SLD 12	0.001	41.2	52970.7	36.18	Considerata	0.97	Si

Verifica a taglio Y §4.2.4.1.2.4 NTC18

X	Comb.	Sfruttamento	VEd	Vc,Rd	Av	Interazione taglio-torsione	Riduzione torsione	Verifica
0	SLU 132	0.11	2418.9	21950.9	14.52	Considerata	1	Si

Verifica a taglio Y SLD §4.2.4.1.2.4 NTC18

X	Comb.	Sfruttamento	VEd	Vc,Rd	Av	Interazione taglio-torsione	Riduzione torsione	Verifica
0	SLD 11	0.074	1576.3	21255.7	14.52	Considerata	0.97	Si

Verifica a torsione §4.2.4.1.2.5 NTC18

X	Comb.	Sfruttamento torsione	TEd	TRd	Riduzione taglio resistente	Sfruttamento taglio-torsione	τEd,totale	τRd	Verifica
36.6	SLV 12	0.205	-3714.7	18118.1	Considerata				Si

Verifica a torsione SLD §4.2.4.1.2.5 NTC18

X	Comb.	Sfruttamento torsione	TEd	TRd	Riduzione taglio resistente	Sfruttamento taglio-torsione	τEd,totale	τRd	Verifica
36.6	SLD 12	0.078	-1411.8	18118.1	Considerata				Si

Verifica a presso/tenso flessione retta X §§ 4.2.4.1.2.3 - 4.2.4.1.2.6 - 4.2.4.1.2.7 - 4.2.4.1.2.8 NTC18

Verifiche eseguite utilizzando la formula conservativa (6.2) §6.2.1 EN 1993-1-1:2005.

X	Comb.	Sfruttamento	Classe	NEd	NRd	Rid. NRd da VEd	Mx,Ed	Mx,Rd	Rid. Mx,Rd da VEd	Rid. Mx,Rd da NEd	ρx	ρy	Verifica
0	SLU 98	0.463	1	-25852.6	118634.3	1	208588	851642	1		0	0	Si

Verifica a presso/tenso flessione deviata §§ 4.2.4.1.2.3 - 4.2.4.1.2.6 - 4.2.4.1.2.7 - 4.2.4.1.2.8 NTC18

Verifiche eseguite utilizzando la formula conservativa (6.2) §6.2.1 EN 1993-1-1:2005.

X	Comb.	Sfruttamento	Classe	NEd	NRd	Rid. NRd da VEd	Mx,Ed	Mx,Rd	My,Ed	My,Rd	Rid. Mx,Rd da VEd	Rid. Mx,Rd da NEd	Rid. My,Rd da VEd	Rid. My,Rd da NEd	α	β	ρx	ρy	Verifica
0	SLU 99	0.463	1	-25852.6	118634.3	1	208588	851642	-103	409967	1		1				0	0	Si

Verifica a presso/tenso flessione deviata SLD §§ 4.2.4.1.2.3 - 4.2.4.1.2.6 - 4.2.4.1.2.7 - 4.2.4.1.2.8 NTC18

Verifiche eseguite utilizzando la formula conservativa (6.2) §6.2.1 EN 1993-1-1:2005.

X	Comb.	Sfruttamento	Classe	NEd	NRd	Rid. NRd da VEd	Mx,Ed	Mx,Rd	My,Ed	My,Rd	Rid. Mx,Rd da VEd	Rid. Mx,Rd da NEd	Rid. My,Rd da VEd	Rid. My,Rd da NEd	α	β	ρx	ρy	Verifica
0	SLD 1	0.321	1	-15957.2	118634.3	1	157423	851642	-514	409967	1		1				0	0	Si

Verifiche ad instabilità

Caratteristiche iniziali

Membratura principale per controllo snellezza; Calcolo di snellezze ed N critici condotti secondo gli assi principali;
Curva X: b; Curva Y: c; Svergolamento: Carico all'estradosso; Curva svergolamento: b;

Dati per instabilità attorno a x

Numero rit.	Presente	Ascissa	Campata	βx/m	Vincolo a entrambi estremi	λx/m	λVer
1	Si	0					

Numero rit.	Presente	Ascissa	Campata	βx/m	Vincolo a entrambi estremi	λx/m	λVer
			1-2	1	Si	10.5	Si, (<200)
2	Si	78.5					

Dati per instabilità attorno a y

Numero rit.	Presente	Ascissa	Campata	βy/n	k,LT	kw,LT	Vincolo a entrambi estremi	λy/n	λVer
1	Si	0							
			1-2	1	1	1	Si	17.4	Si, (<200)
2	Si	78.5							

Verifica di stabilità per pressoflessione §C.4.2.4.1.3.3.2 NTC18

X	Comb.	Sfruttamento	Classe	NEd	NRk	Mx,Ed max	Mx,Rk	My,Ed max	My,Rk	χ,x	χ,y	kxx	kxy	kyx	kyy	χ,LT	Verifica
0	SLU 132	0.414	1	-25852.6	124566	208588	894223.7	102.9	430465.2	1	1	0.727	0.283	0.8	0.472	1	Si

Verifica di stabilità per pressoflessione SLD §C.4.2.4.1.3.3.2 NTC18

X	Comb.	Sfruttamento	Classe	NEd	NRk	Mx,Ed max	Mx,Rk	My,Ed max	My,Rk	χ,x	χ,y	kxx	kxy	kyx	kyy	χ,LT	Verifica
0	SLD 1	0.285	1	-15957.2	124566	157422.9	894223.7	1373.8	430465.2	1	1	0.788	0.438	0.8	0.73	1	Si

Verifica di stabilità a taglio anima Y §4.2.4.1.2.4 [4.2.27] NTC18

η	hw	tw	hw/tw max	Verifica
1.2	15.2	0.6	55.46	Si

Verifica di stabilità a taglio anima Y SLD §4.2.4.1.2.4 [4.2.27] NTC18

η	hw	tw	hw/tw max	Verifica
1.2	15.2	0.6	55.46	Si

Verifiche a deformabilità

Mensola X: No; Mensola Y: No.

Frecce lungo X

Ascissa freccia	Combinazione	Freccia	Luce	L/f	L/f,min	Tipo	Verifica
28.8	SLE RA 1	0	78.5	10000	250	Totale	Si
28.8	SLE RA 31	0	78.5	10000	250	Totale	Si
28.8	SLE RA 30	0	78.5	10000	250	Totale	Si
28.8	SLE RA 29	0	78.5	10000	250	Totale	Si
28.8	SLE RA 28	0	78.5	10000	250	Totale	Si
23.5	SLE RA 2	0	78.5	10000	350	Variabile	Si
28.8	SLE RA 31	0	78.5	10000	350	Variabile	Si
28.8	SLE RA 30	0	78.5	10000	350	Variabile	Si
28.8	SLE RA 29	0	78.5	10000	350	Variabile	Si
28.8	SLE RA 28	0	78.5	10000	350	Variabile	Si

Frecce lungo Y

Ascissa freccia	Combinazione	Freccia	Luce	L/f	L/f,min	Tipo	Verifica
36.6	SLE RA 33	0.013	78.5	5948.7	250	Totale	Si
36.6	SLE RA 32	0.013	78.5	5948.7	250	Totale	Si
36.6	SLE RA 25	0.013	78.5	6025.2	250	Totale	Si
36.6	SLE RA 24	0.013	78.5	6025.2	250	Totale	Si
36.6	SLE RA 21	0.013	78.5	6054.4	250	Totale	Si
36.6	SLE RA 2	0	78.5	10000	350	Variabile	Si
36.6	SLE RA 31	0.003	78.5	10000	350	Variabile	Si
36.6	SLE RA 30	0.003	78.5	10000	350	Variabile	Si
36.6	SLE RA 29	0.002	78.5	10000	350	Variabile	Si
36.6	SLE RA 28	0.002	78.5	10000	350	Variabile	Si

Superelemento in acciaio composto dall'asta 141

Caratteristiche del materiale

Acciaio: S275, fyk = 2750

Caratteristiche geometriche

Lunghezza: 78.5
Nodo iniziale: 88 Nodo finale: 110
Cerniera iniziale: No Cerniera finale: No
Sovraresistenza: 0% Sisma Z: No

Caratteristiche della sezione

Sezione	Rotazione	Area	Jx	Jy	ix	iy	Wx	Wy	Wplx	Wply
HEA180	0	45.3	2512.55	924.65	7.45	4.52	293.87	102.74	325.17	156.53

Verifiche di resistenza

Verifiche a forza assiale §4.2.4.1.2.1 - §4.2.4.1.2.2 NTC18

X	Comb.	Sfruttamento	Classe	NEd	Nc,Rd	Nt,Rd	Riduzione da taglio	ρx	ρy	Verifica
0	SLU 98	0.218	1	-25847.1	118634.3		1	0	0	Si

Verifiche a forza assiale SLD §4.2.4.1.2.1 - §4.2.4.1.2.2 NTC18

X	Comb.	Sfruttamento	Classe	NEd	Nc,Rd	Nt,Rd	Riduzione da taglio	ρx	ρy	Verifica
0	SLD 15	0.135	1	-15957.2	118634.3		1	0	0	Si

Verifica a taglio X §4.2.4.1.2.4 NTC18

X	Comb.	Sfruttamento	VEd	Vc,Rd	Av	Interazione taglio-torsione	Riduzione torsione	Verifica
78.5	SLV 8	0.002	-106.8	50016.1	36.18	Considerata	0.91	Si

Verifica a taglio X SLD §4.2.4.1.2.4 NTC18

X	Comb.	Sfruttamento	VEd	Vc,Rd	Av	Interazione taglio-torsione	Riduzione torsione	Verifica
78.5	SLD 8	0.001	-41.2	52970.7	36.18	Considerata	0.97	Si

Verifica a taglio Y §4.2.4.1.2.4 NTC18

X	Comb.	Sfruttamento	VEd	Vc,Rd	Av	Interazione taglio-torsione	Riduzione torsione	Verifica
0	SLU 99	0.11	2405.6	21950.9	14.52	Considerata	1	Si

Verifica a taglio Y SLD §4.2.4.1.2.4 NTC18

X	Comb.	Sfruttamento	VEd	Vc,Rd	Av	Interazione taglio-torsione	Riduzione torsione	Verifica
0	SLD 8	0.074	1576.3	21255.7	14.52	Considerata	0.97	Si

Verifica a torsione §4.2.4.1.2.5 NTC18

X	Comb.	Sfruttamento torsione	TEd	TRd	Riduzione taglio resistente	Sfruttamento taglio-torsione	τEd,totale	τRd	Verifica
78.5	SLV 8	0.205	3714.7	18118.1	Considerata				Si

Verifica a torsione SLD §4.2.4.1.2.5 NTC18

X	Comb.	Sfruttamento torsione	TEd	TRd	Riduzione taglio resistente	Sfruttamento taglio-torsione	τEd,totale	τRd	Verifica
78.5	SLD 8	0.078	1411.8	18118.1	Considerata				Si

Verifica a presso/tenso flessione retta X §§ 4.2.4.1.2.3 - 4.2.4.1.2.6 - 4.2.4.1.2.7 - 4.2.4.1.2.8 NTC18

Verifiche eseguite utilizzando la formula conservativa (6.2) §6.2.1 EN 1993-1-1:2005.

X	Comb.	Sfruttamento	Classe	NEd	NRd	Rid. NRd da VEd	Mx,Ed	Mx,Rd	Rid. Mx,Rd da VEd	Rid. Mx,Rd da NEd	ρx	ρy	Verifica
0	SLU 131	0.463	1	-25847.1	118634.3	1	208539	851642	1		0	0	Si

Verifica a presso/tenso flessione deviata §§ 4.2.4.1.2.3 - 4.2.4.1.2.6 - 4.2.4.1.2.7 - 4.2.4.1.2.8 NTC18

Verifiche eseguite utilizzando la formula conservativa (6.2) §6.2.1 EN 1993-1-1:2005.

X	Comb.	Sfruttamento	Classe	NEd	NRd	Rid. NRd da VEd	Mx,Ed	Mx,Rd	My,Ed	My,Rd	Rid. Mx,Rd da VEd	Rid. Mx,Rd da NEd	Rid. My,Rd da VEd	Rid. My,Rd da NEd	α	β	ρx	ρy	Verifica
0	SLU 99	0.463	1	-25847.1	118634.3	1	208539	851642	103	409967	1		1				0	0	Si

Verifica a presso/tenso flessione deviata SLD §§ 4.2.4.1.2.3 - 4.2.4.1.2.6 - 4.2.4.1.2.7 - 4.2.4.1.2.8 NTC18

Verifiche eseguite utilizzando la formula conservativa (6.2) §6.2.1 EN 1993-1-1:2005.

X	Comb.	Sfruttamento	Classe	NEd	NRd	Rid. NRd da VEd	Mx,Ed	Mx,Rd	My,Ed	My,Rd	Rid. Mx,Rd da VEd	Rid. Mx,Rd da NEd	Rid. My,Rd da VEd	Rid. My,Rd da NEd	α	β	ρx	ρy	Verifica
0	SLD 13	0.321	1	-15957.2	118634.3	1	157423	851642	514	409967	1		1				0	0	Si

Verifiche ad instabilità

Caratteristiche iniziali

Membratura principale per controllo snellezza; Calcolo di snellezze ed N critici condotti secondo gli assi principali;
Curva X: b; Curva Y: c; Svergolamento: Carico all'estradosso; Curva svergolamento: b;

Dati per instabilità attorno a x

Numero rit.	Presente	Ascissa	Campata	βx/m	Vincolo a entrambi estremi	λx/m	λVer
1	Si	0					
			1-2	1	Si	10.5	Si, (<200)
2	Si	78.5					

Dati per instabilità attorno a y

Numero rit.	Presente	Ascissa	Campata	βy/n	k,LT	kw,LT	Vincolo a entrambi estremi	λy/n	λVer
1	Si	0							
			1-2	1	1	1	Si	17.4	Si, (<200)
2	Si	78.5							

Verifica di stabilità per pressoflessione §C.4.2.4.1.3.3.2 NTC18

X	Comb.	Sfruttamento	Classe	NEd	NRk	Mx,Ed max	Mx,Rk	My,Ed max	My,Rk	χ,x	χ,y	kxx	kxy	kyx	kyy	χ,LT	Verifica
0	SLU 99	0.414	1	-25847.1	124566	208538.8	894223.7	102.8	430465.2	1	1	0.729	0.283	0.8	0.472	1	Si

Verifica di stabilità per pressoflessione SLD §C.4.2.4.1.3.3.2 NTC18

X	Comb.	Sfruttamento	Classe	NEd	NRk	Mx,Ed max	Mx,Rk	My,Ed max	My,Rk	χ,x	χ,y	kxx	kxy	kyx	kyy	χ,LT	Verifica
0	SLD 14	0.285	1	-15957.2	124566	157422.9	894223.7	1373.8	430465.2	1	1	0.788	0.438	0.8	0.73	1	Si

Verifica di stabilità a taglio anima Y §4.2.4.1.2.4 [4.2.27] NTC18

η	hw	tw	hw/tw max	Verifica
1.2	15.2	0.6	55.46	Si

Verifica di stabilità a taglio anima Y SLD §4.2.4.1.2.4 [4.2.27] NTC18

η	hw	tw	hw/tw max	Verifica
1.2	15.2	0.6	55.46	Si

Verifiche a deformabilità

Mensola X: No; Mensola Y: No.

Frecce lungo X

Ascissa freccia	Combinazione	Freccia	Luce	L/f	L/f,min	Tipo	Verifica
28.8	SLE RA 1	0	78.5	10000	250	Totale	Si
28.8	SLE RA 31	0	78.5	10000	250	Totale	Si
28.8	SLE RA 30	0	78.5	10000	250	Totale	Si
28.8	SLE RA 29	0	78.5	10000	250	Totale	Si
28.8	SLE RA 28	0	78.5	10000	250	Totale	Si
23.5	SLE RA 2	0	78.5	10000	350	Variabile	Si
28.8	SLE RA 31	0	78.5	10000	350	Variabile	Si
28.8	SLE RA 30	0	78.5	10000	350	Variabile	Si
28.8	SLE RA 29	0	78.5	10000	350	Variabile	Si
28.8	SLE RA 28	0	78.5	10000	350	Variabile	Si

Frecce lungo Y

Ascissa freccia	Combinazione	Freccia	Luce	L/f	L/f,min	Tipo	Verifica
36.6	SLE RA 33	0.013	78.5	5928.7	250	Totale	Si
36.6	SLE RA 32	0.013	78.5	5928.7	250	Totale	Si
36.6	SLE RA 25	0.013	78.5	6010.6	250	Totale	Si
36.6	SLE RA 24	0.013	78.5	6010.6	250	Totale	Si
36.6	SLE RA 21	0.013	78.5	6043.7	250	Totale	Si
36.6	SLE RA 2	0	78.5	10000	350	Variabile	Si
36.6	SLE RA 31	0.003	78.5	10000	350	Variabile	Si
36.6	SLE RA 30	0.003	78.5	10000	350	Variabile	Si
36.6	SLE RA 29	0.002	78.5	10000	350	Variabile	Si
36.6	SLE RA 28	0.002	78.5	10000	350	Variabile	Si

Superelemento in acciaio composto dall'asta 142

Caratteristiche del materiale

Acciaio: S275, fyk = 2750

Caratteristiche geometriche

Lunghezza: 170.7
Nodo iniziale: 110 Nodo finale: 122
Cerniera iniziale: No Cerniera finale: No
Sovraresistenza: 0% Sisma Z: No

Caratteristiche della sezione

Sezione	Rotazione	Area	Jx	Jy	ix	iy	Wx	Wy	Wplx	Wply
HEA180	0	45.3	2512.55	924.65	7.45	4.52	293.87	102.74	325.17	156.53

Verifiche di resistenza

Verifiche a forza assiale §4.2.4.1.2.1 - §4.2.4.1.2.2 NTC18

X	Comb.	Sfruttamento	Classe	NEd	Nc,Rd	Nt,Rd	Riduzione da taglio	ρx	ρy	Verifica
0	SLU 98	0.2	1	-23690.8	118634.3		1	0	0	Si

Verifiche a forza assiale SLD §4.2.4.1.2.1 - §4.2.4.1.2.2 NTC18

X	Comb.	Sfruttamento	Classe	NEd	Nc,Rd	Nt,Rd	Riduzione da taglio	ρx	ρy	Verifica
0	SLD 16	0.12	1	-14286.8	118634.3		1	0	0	Si

Verifica a taglio X §4.2.4.1.2.4 NTC18

X	Comb.	Sfruttamento	VEd	Vc,Rd	Av	Interazione taglio-torsione	Riduzione torsione	Verifica
22.8	SLV 8	0.001	62.6	54400.5	36.18	Considerata	0.99	Si

Verifica a taglio Y §4.2.4.1.2.4 NTC18

X	Comb.	Sfruttamento	VEd	Vc,Rd	Av	Interazione taglio-torsione	Riduzione torsione	Verifica
0	SLU 132	0.219	4814.9	21950.9	14.52	Considerata	1	Si

Verifica a taglio Y SLD §4.2.4.1.2.4 NTC18

X	Comb.	Sfruttamento	VEd	Vc,Rd	Av	Interazione taglio-torsione	Riduzione torsione	Verifica
0	SLD 16	0.161	3522.3	21936.9	14.52	Considerata	1	Si

Verifica a torsione §4.2.4.1.2.5 NTC18

X	Comb.	Sfruttamento torsione	TEd	TRd	Riduzione taglio resistente	Sfruttamento taglio-torsione	τEd,totale	τRd	Verifica
170.7	SLV 8	0.014	249.9	18118.1	Considerata				Si

Verifica a torsione SLD §4.2.4.1.2.5 NTC18

X	Comb.	Sfruttamento torsione	TEd	TRd	Riduzione taglio resistente	Sfruttamento taglio-torsione	τEd,totale	τRd	Verifica
170.7	SLD 8	0.005	95	18118.1	Considerata				Si

Verifica a presso/tenso flessione retta X §§ 4.2.4.1.2.3 - 4.2.4.1.2.6 - 4.2.4.1.2.7 - 4.2.4.1.2.8 NTC18

Verifiche eseguite utilizzando la formula conservativa (6.2) §6.2.1 EN 1993-1-1:2005.

X	Comb.	Sfruttamento	Classe	NEd	NRd	Rid. NRd da VEd	Mx,Ed	Mx,Rd	Rid. Mx,Rd da VEd	Rid. Mx,Rd da NEd	ρx	ρy	Verifica
130.9	SLU 99	0.411	1	-23117.7	118634.3	1	-183830	851642	1		0	0	Si

Verifica a presso/tenso flessione retta Y SLD §§ 4.2.4.1.2.3 - 4.2.4.1.2.6 - 4.2.4.1.2.7 - 4.2.4.1.2.8 NTC18

Verifiche eseguite utilizzando la formula conservativa (6.2) §6.2.1 EN 1993-1-1:2005.

X	Comb.	Sfruttamento	Classe	NEd	NRd	Rid. NRd da VEd	My,Ed	My,Rd	Rid. My,Rd da VEd	Rid. My,Rd da NEd	ρx	ρy	Verifica
17.1	SLD 3	0.119	1	-13715	118634.3	1	-1349	409967	1		0	0	Si

Verifica a presso/tenso flessione deviata §§ 4.2.4.1.2.3 - 4.2.4.1.2.6 - 4.2.4.1.2.7 - 4.2.4.1.2.8 NTC18

Verifiche eseguite utilizzando la formula conservativa (6.2) §6.2.1 EN 1993-1-1:2005.

X	Comb.	Sfruttamento	Classe	NEd	NRd	Rid. NRd da VEd	Mx,Ed	Mx,Rd	My,Ed	My,Rd	Rid. Mx,Rd da VEd	Rid. Mx,Rd da NEd	Rid. My,Rd da VEd	Rid. My,Rd da NEd	α	β	ρx	ρy	Verifica
0	SLV 15	0.323	1	-14604	118634.3	1	162147	851642	-3852	409967	1		1				0	0	Si

Verifica a presso/tenso flessione deviata SLD §§ 4.2.4.1.2.3 - 4.2.4.1.2.6 - 4.2.4.1.2.7 - 4.2.4.1.2.8 NTC18

Verifiche eseguite utilizzando la formula conservativa (6.2) §6.2.1 EN 1993-1-1:2005.

X	Comb.	Sfruttamento	Classe	NEd	NRd	Rid. NRd da VEd	Mx,Ed	Mx,Rd	My,Ed	My,Rd	Rid. Mx,Rd da VEd	Rid. Mx,Rd da NEd	Rid. My,Rd da VEd	Rid. My,Rd da NEd	α	β	ρx	ρy	Verifica
0	SLD 15	0.264	1	-14286.8	118634.3	1	118961	851642	-1472	409967	1		1				0	0	Si

Verifiche ad instabilità

Caratteristiche iniziali

Membratura principale per controllo snellezza; Calcolo di snellezze ed N critici condotti secondo gli assi principali;
Curva X: b; Curva Y: c; Svergolamento: Carico all'estradosso; Curva svergolamento: b;

Dati per instabilità attorno a x

Numero rit.	Presente	Ascissa	Campata	βx/m	Vincolo a entrambi estremi	λx/m	λVer
1	Si	0					
			1-2	1	Si	22.9	Si, (<200)
2	Si	170.7					

Dati per instabilità attorno a y

Numero rit.	Presente	Ascissa	Campata	βy/n	k,LT	kw,LT	Vincolo a entrambi estremi	λy/n	λVer
1	Si	0							
			1-2	1	1	1	Si	37.8	Si, (<200)
2	Si	170.7							

Verifica di stabilità per pressoflessione §C.4.2.4.1.3.3.2 NTC18

X	Comb.	Sfruttamento	Classe	NEd	NRk	Mx,Ed max	Mx,Rk	My,Ed max	My,Rk	χ,x	χ,y	kxx	kxy	kyx	kyy	χ,LT	Verifica
0	SLU 99	0.445	1	-23690.8	124566	183830.5	894223.7	28.6	430465.2	0.977	0.879	0.985	0.426	0.986	0.71	0.978	Si

Verifica di stabilità per pressoflessione SLD §C.4.2.4.1.3.3.2 NTC18

X	Comb.	Sfruttamento	Classe	NEd	NRk	Mx,Ed max	Mx,Rk	My,Ed max	My,Rk	χ,x	χ,y	kxx	kxy	kyx	kyy	χ,LT	Verifica
0	SLD 15	0.28	1	-14286.8	124566	118961.5	894223.7	1472.1	430465.2	0.977	0.879	0.683	0.415	0.986	0.691	0.978	Si

Verifica di stabilità a taglio anima Y §4.2.4.1.2.4 [4.2.27] NTC18

η	hw	tw	hw/tw max	Verifica
1.2	15.2	0.6	55.46	Si

Verifica di stabilità a taglio anima Y SLD §4.2.4.1.2.4 [4.2.27] NTC18

η	hw	tw	hw/tw max	Verifica
1.2	15.2	0.6	55.46	Si

Verifiche a deformabilità

Mensola X: No; Mensola Y: No.

Frecce lungo X

Ascissa freccia	Combinazione	Freccia	Luce	L/f	L/f,min	Tipo	Verifica
74	SLE RA 1	0	170.7	10000	250	Totale	Si
74	SLE RA 31	0	170.7	10000	250	Totale	Si
74	SLE RA 30	0	170.7	10000	250	Totale	Si
74	SLE RA 29	0	170.7	10000	250	Totale	Si
74	SLE RA 28	0	170.7	10000	250	Totale	Si
62.6	SLE RA 2	0	170.7	10000	350	Variabile	Si
74	SLE RA 31	0	170.7	10000	350	Variabile	Si
74	SLE RA 30	0	170.7	10000	350	Variabile	Si
74	SLE RA 29	0	170.7	10000	350	Variabile	Si
74	SLE RA 28	0	170.7	10000	350	Variabile	Si

Frecce lungo Y

Ascissa freccia	Combinazione	Freccia	Luce	L/f	L/f,min	Tipo	Verifica
96.7	SLE RA 33	-0.079	170.7	2152.6	250	Totale	Si
96.7	SLE RA 32	-0.079	170.7	2152.6	250	Totale	Si
96.7	SLE RA 25	-0.079	170.7	2173.1	250	Totale	Si
96.7	SLE RA 24	-0.079	170.7	2173.1	250	Totale	Si
96.7	SLE RA 21	-0.078	170.7	2182.4	250	Totale	Si
91	SLE RA 2	0	170.7	10000	350	Variabile	Si
108.1	SLE RA 31	-0.01	170.7	10000	350	Variabile	Si
108.1	SLE RA 30	-0.01	170.7	10000	350	Variabile	Si
108.1	SLE RA 29	-0.009	170.7	10000	350	Variabile	Si
108.1	SLE RA 28	-0.009	170.7	10000	350	Variabile	Si

Superelemento in acciaio composto dall'asta 143

Caratteristiche del materiale

Acciaio: S275, fyk = 2750

Caratteristiche geometriche

Lunghezza: 170.7
Nodo iniziale: 109 Nodo finale: 122
Cerniera iniziale: No Cerniera finale: No
Sovraresistenza: 0% Sisma Z: No

Caratteristiche della sezione

Sezione	Rotazione	Area	Jx	Jy	ix	iy	Wx	Wy	Wplx	Wply
HEA180	0	45.3	2512.55	924.65	7.45	4.52	293.87	102.74	325.17	156.53

Verifiche di resistenza

Verifiche a forza assiale §4.2.4.1.2.1 - §4.2.4.1.2.2 NTC18

X	Comb.	Sfruttamento	Classe	NEd	Nc,Rd	Nt,Rd	Riduzione da taglio	ρx	ρy	Verifica
0	SLU 98	0.2	1	-23690.2	118634.3		1	0	0	Si

Verifiche a forza assiale SLD §4.2.4.1.2.1 - §4.2.4.1.2.2 NTC18

X	Comb.	Sfruttamento	Classe	NEd	Nc,Rd	Nt,Rd	Riduzione da taglio	ρx	ρy	Verifica
0	SLD 4	0.12	1	-14286.8	118634.3		1	0	0	Si

Verifica a taglio X §4.2.4.1.2.4 NTC18

X	Comb.	Sfruttamento	VEd	Vc,Rd	Av	Interazione taglio-torsione	Riduzione torsione	Verifica
17.1	SLV 11	0.001	-62.6	54400.5	36.18	Considerata	0.99	Si

Verifica a taglio Y §4.2.4.1.2.4 NTC18

X	Comb.	Sfruttamento	VEd	Vc,Rd	Av	Interazione taglio-torsione	Riduzione torsione	Verifica
0	SLU 132	0.219	4809.1	21950.9	14.52	Considerata	1	Si

Verifica a taglio Y SLD §4.2.4.1.2.4 NTC18

X	Comb.	Sfruttamento	VEd	Vc,Rd	Av	Interazione taglio-torsione	Riduzione torsione	Verifica
0	SLD 4	0.161	3522.3	21936.9	14.52	Considerata	1	Si

Verifica a torsione §4.2.4.1.2.5 NTC18

X	Comb.	Sfruttamento torsione	TEd	TRd	Riduzione taglio resistente	Sfruttamento taglio-torsione	τEd,totale	τRd	Verifica
79.6	SLV 12	0.014	-249.9	18118.1	Considerata				Si

Verifica a torsione SLD §4.2.4.1.2.5 NTC18

X	Comb.	Sfruttamento torsione	TEd	TRd	Riduzione taglio resistente	Sfruttamento taglio-torsione	τEd,totale	τRd	Verifica
79.6	SLD 12	0.005	-95	18118.1	Considerata				Si

Verifica a presso/tenso flessione retta X §§ 4.2.4.1.2.3 - 4.2.4.1.2.6 - 4.2.4.1.2.7 - 4.2.4.1.2.8 NTC18

Verifiche eseguite utilizzando la formula conservativa (6.2) §6.2.1 EN 1993-1-1:2005.

X	Comb.	Sfruttamento	Classe	NEd	NRd	Rid. NRd da VEd	Mx,Ed	Mx,Rd	Rid. Mx,Rd da VEd	Rid. Mx,Rd da NEd	ρx	ρy	Verifica
130.9	SLU 99	0.411	1	-23117	118634.3	1	-184062	851642	1		0	0	Si

Verifica a presso/tenso flessione retta Y SLD §§ 4.2.4.1.2.3 - 4.2.4.1.2.6 - 4.2.4.1.2.7 - 4.2.4.1.2.8 NTC18

Verifiche eseguite utilizzando la formula conservativa (6.2) §6.2.1 EN 1993-1-1:2005.

X	Comb.	Sfruttamento	Classe	NEd	NRd	Rid. NRd da VEd	My,Ed	My,Rd	Rid. My,Rd da VEd	Rid. My,Rd da NEd	ρx	ρy	Verifica
17.1	SLD 15	0.119	1	-13715	118634.3	1	1349	409967	1		0	0	Si

Verifica a presso/tenso flessione deviata §§ 4.2.4.1.2.3 - 4.2.4.1.2.6 - 4.2.4.1.2.7 - 4.2.4.1.2.8 NTC18

Verifiche eseguite utilizzando la formula conservativa (6.2) §6.2.1 EN 1993-1-1:2005.

X	Comb.	Sfruttamento	Classe	NEd	NRd	Rid. NRd da VEd	Mx,Ed	Mx,Rd	My,Ed	My,Rd	Rid. Mx,Rd da VEd	Rid. Mx,Rd da NEd	Rid. My,Rd da VEd	Rid. My,Rd da NEd	α	β	ρx	ρy	Verifica
0	SLV 3	0.323	1	-14604	118634.3	1	162147	851642	3852	409967	1		1				0	0	Si

Verifica a presso/tenso flessione deviata SLD §§ 4.2.4.1.2.3 - 4.2.4.1.2.6 - 4.2.4.1.2.7 - 4.2.4.1.2.8 NTC18

Verifiche eseguite utilizzando la formula conservativa (6.2) §6.2.1 EN 1993-1-1:2005.

X	Comb.	Sfruttamento	Classe	NEd	NRd	Rid. NRd da VEd	Mx,Ed	Mx,Rd	My,Ed	My,Rd	Rid. Mx,Rd da VEd	Rid. Mx,Rd da NEd	Rid. My,Rd da VEd	Rid. My,Rd da NEd	α	β	ρx	ρy	Verifica
0	SLD 4	0.264	1	-14286.8	118634.3	1	118961	851642	1472	409967	1		1				0	0	Si

Verifiche ad instabilità

Caratteristiche iniziali

Membratura principale per controllo snellezza; Calcolo di snellezze ed N critici condotti secondo gli assi principali;
Curva X: b; Curva Y: c; Svergolamento: Carico all'estradosso; Curva svergolamento: b;

Dati per instabilità attorno a x

Numero rit.	Presente	Ascissa	Campata	βx/m	Vincolo a entrambi estremi	λx/m	λVer
1	Si	0					
			1-2	1	Si	22.9	Si, (<200)
2	Si	170.7					

Dati per instabilità attorno a y

Numero rit.	Presente	Ascissa	Campata	βy/n	k,LT	kw,LT	Vincolo a entrambi estremi	λy/n	λVer
1	Si	0							

Numero rit.	Presente	Ascissa	Campata	βy/n	k,LT	kw,LT	Vincolo a entrambi estremi	λy/n	λVer
			1-2	1	1	1	Si	37.8	Si, (<200)
2	Si	170.7							

Verifica di stabilità per pressoflessione §C.4.2.4.1.3.3.2 NTC18

X	Comb.	Sfruttamento	Classe	NEd	NRk	Mx,Ed max	Mx,Rk	My,Ed max	My,Rk	χ,x	χ,y	kxx	kxy	kyx	kyy	χ,LT	Verifica
0	SLU 99	0.445	1	-23690.2	124566	184062.3	894223.7	28.6	430465.2	0.977	0.879	0.987	0.426	0.986	0.71	0.978	Si

Verifica di stabilità per pressoflessione SLD §C.4.2.4.1.3.3.2 NTC18

X	Comb.	Sfruttamento	Classe	NEd	NRk	Mx,Ed max	Mx,Rk	My,Ed max	My,Rk	χ,x	χ,y	kxx	kxy	kyx	kyy	χ,LT	Verifica
0	SLD 4	0.28	1	-14286.8	124566	118961.5	894223.7	1472.1	430465.2	0.977	0.879	0.683	0.415	0.986	0.691	0.978	Si

Verifica di stabilità a taglio anima Y §4.2.4.1.2.4 [4.2.27] NTC18

η	hw	tw	hw/tw max	Verifica
1.2	15.2	0.6	55.46	Si

Verifica di stabilità a taglio anima Y SLD §4.2.4.1.2.4 [4.2.27] NTC18

η	hw	tw	hw/tw max	Verifica
1.2	15.2	0.6	55.46	Si

Verifiche a deformabilità

Mensola X: No; Mensola Y: No.

Frecce lungo X

Ascissa freccia	Combinazione	Freccia	Luce	L/f	L/f,min	Tipo	Verifica
74	SLE RA 1	0	170.7	10000	250	Totale	Si
74	SLE RA 31	0	170.7	10000	250	Totale	Si
74	SLE RA 30	0	170.7	10000	250	Totale	Si
74	SLE RA 29	0	170.7	10000	250	Totale	Si
74	SLE RA 28	0	170.7	10000	250	Totale	Si
62.6	SLE RA 2	0	170.7	10000	350	Variabile	Si
74	SLE RA 31	0	170.7	10000	350	Variabile	Si
74	SLE RA 30	0	170.7	10000	350	Variabile	Si
74	SLE RA 29	0	170.7	10000	350	Variabile	Si
74	SLE RA 28	0	170.7	10000	350	Variabile	Si

Frecce lungo Y

Ascissa freccia	Combinazione	Freccia	Luce	L/f	L/f,min	Tipo	Verifica
96.7	SLE RA 33	-0.08	170.7	2146.8	250	Totale	Si
96.7	SLE RA 32	-0.08	170.7	2146.8	250	Totale	Si
96.7	SLE RA 25	-0.079	170.7	2168.9	250	Totale	Si
96.7	SLE RA 24	-0.079	170.7	2168.9	250	Totale	Si
96.7	SLE RA 21	-0.078	170.7	2179.4	250	Totale	Si
91	SLE RA 2	0	170.7	10000	350	Variabile	Si
108.1	SLE RA 31	-0.01	170.7	10000	350	Variabile	Si
108.1	SLE RA 30	-0.01	170.7	10000	350	Variabile	Si
108.1	SLE RA 29	-0.009	170.7	10000	350	Variabile	Si
108.1	SLE RA 28	-0.009	170.7	10000	350	Variabile	Si

Superelemento in acciaio composto dall'asta 144

Caratteristiche del materiale

Acciaio: S275, fyk = 2750

Caratteristiche geometriche

Lunghezza: 148
Nodo iniziale: 64 Nodo finale: 63
Cerniera iniziale: Svincolo: M2, M3 Cerniera finale: No
Sovraresistenza: 0% Sisma Z: No

Caratteristiche della sezione

Sezione	Rotazione	Area	Jx	Jy	ix	iy	Wx	Wy	Wplx	Wply
HEA160	0	38.82	1674.7	615.62	6.57	3.98	220.36	76.95	245.43	117.67

Verifiche di resistenza

Verifiche a forza assiale §4.2.4.1.2.1 - §4.2.4.1.2.2 NTC18

X	Comb.	Sfruttamento	Classe	NEd	Nc,Rd	Nt,Rd	Riduzione da taglio	ρx	ρy	Verifica
74	SLU 131	0.107		10873.6		101662.9	1	0	0	Si

Verifiche a forza assiale SLD §4.2.4.1.2.1 - §4.2.4.1.2.2 NTC18

X	Comb.	Sfruttamento	Classe	NEd	Nc,Rd	Nt,Rd	Riduzione da taglio	ρx	ρy	Verifica
148	SLD 16	0.072		7273.4		101662.9	1	0	0	Si

Verifica a taglio Y §4.2.4.1.2.4 NTC18

X	Comb.	Sfruttamento	VEd	Vc,Rd	Av	Interazione taglio-torsione	Riduzione torsione	Verifica
148	SLV 13	0.043	-854.1	19959.2	13.26	Considerata	1	Si

Verifica a taglio Y SLD §4.2.4.1.2.4 NTC18

X	Comb.	Sfruttamento	VEd	Vc,Rd	Av	Interazione taglio-torsione	Riduzione torsione	Verifica
148	SLD 14	0.021	-417.2	20012.5	13.26	Considerata	1	Si

Verifica a torsione §4.2.4.1.2.5 NTC18

X	Comb.	Sfruttamento torsione	TEd	TRd	Riduzione taglio resistente	Sfruttamento taglio-torsione	τEd,totale	τRd	Verifica
148	SLV 10	0.036	-523.1	14685.6	Considerata				Si

Verifica a torsione SLD §4.2.4.1.2.5 NTC18

X	Comb.	Sfruttamento torsione	TEd	TRd	Riduzione taglio resistente	Sfruttamento taglio-torsione	τEd,totale	τRd	Verifica
148	SLD 10	0.014	-199.2	14685.6	Considerata				Si

Verifica a presso/tenso flessione retta X §§ 4.2.4.1.2.3 - 4.2.4.1.2.6 - 4.2.4.1.2.7 - 4.2.4.1.2.8 NTC18

Verifiche eseguite utilizzando la formula conservativa (6.2) §6.2.1 EN 1993-1-1:2005.

X	Comb.	Sfruttamento	Classe	NEd	NRd	Rid. NRd da VEd	Mx,Ed	Mx,Rd	Rid. Mx,Rd da VEd	Rid. Mx,Rd da NEd	ρx	ρy	Verifica
69.1	SLV 16	0.174	1	8737	101662.9	1	56601	642783	1		0	0	Si

Verifica a presso/tenso flessione retta X SLD §§ 4.2.4.1.2.3 - 4.2.4.1.2.6 - 4.2.4.1.2.7 - 4.2.4.1.2.8 NTC18

Verifiche eseguite utilizzando la formula conservativa (6.2) §6.2.1 EN 1993-1-1:2005.

X	Comb.	Sfruttamento	Classe	NEd	NRd	Rid. NRd da VEd	Mx,Ed	Mx,Rd	Rid. Mx,Rd da VEd	Rid. Mx,Rd da NEd	ρx	ρy	Verifica
148	SLD 16	0.162	1	7273.4	101662.9	1	58401	642783	1		0	0	Si

Verifica a presso/tenso flessione deviata §§ 4.2.4.1.2.3 - 4.2.4.1.2.6 - 4.2.4.1.2.7 - 4.2.4.1.2.8 NTC18

Verifiche eseguite utilizzando la formula conservativa (6.2) §6.2.1 EN 1993-1-1:2005.

X	Comb.	Sfruttamento	Classe	NEd	NRd	Rid. NRd da VEd	Mx,Ed	Mx,Rd	My,Ed	My,Rd	Rid. Mx,Rd da VEd	Rid. Mx,Rd da NEd	Rid. My,Rd da VEd	Rid. My,Rd da NEd	α	β	ρx	ρy	Verifica
148	SLV 13	0.278	1	8737	101662.9	1	123067	642783	159	308186	1		1				0	0	Si

Verifica a presso/tenso flessione deviata SLD §§ 4.2.4.1.2.3 - 4.2.4.1.2.6 - 4.2.4.1.2.7 - 4.2.4.1.2.8 NTC18

Verifiche eseguite utilizzando la formula conservativa (6.2) §6.2.1 EN 1993-1-1:2005.

X	Comb.	Sfruttamento	Classe	NEd	NRd	Rid. NRd da VEd	Mx,Ed	Mx,Rd	My,Ed	My,Rd	Rid. Mx,Rd da VEd	Rid. Mx,Rd da NEd	Rid. My,Rd da VEd	Rid. My,Rd da NEd	α	β	ρx	ρy	Verifica
148	SLD 10	0.098	1	6442.9	101662.9	1	21719	642783	201	308186	1		1				0	0	Si

Verifiche ad instabilità

Caratteristiche iniziali

Membratura principale per controllo snellezza; Calcolo di snellezze ed N critici condotti secondo gli assi principali;
Curva X: b; Curva Y: c; Svergolamento: Carico all'estradosso; Curva svergolamento: b;

Dati per instabilità attorno a x

Numero rit.	Presente	Ascissa	Campata	βx/m	Vincolo a entrambi estremi	λx/m	λVer
1	Si	0					
			1-2	1	Si	22.5	Si, (<200)
2	Si	148					

Dati per instabilità attorno a y

Numero rit.	Presente	Ascissa	Campata	βy/n	k,LT	kw,LT	Vincolo a entrambi estremi	λy/n	λVer
1	Si	0							
			1-2	1	1	1	Si	37.2	Si, (<200)
2	Si	148							

Verifica a svergolamento con trazione §4.2.4.1.3.2 NTC18 - §5.5.3 ENV 1993-1-1:1994

X	Comb.	Sfruttamento	Classe	Obblig.	NEd	Mx,Ed	Mx,Eff,Ed	Mb,Rd,x	χ,LT	λ adim. LT	L,LT	M,critico	Verifica
69.1	SLV 1	0.061	1	Si	3437.1	-52663.5	-39005.3	642783.4	1	0.278	148	8702008.8	Si

Verifica a svergolamento con trazione SLD §4.2.4.1.3.2 NTC18 - §5.5.3 ENV 1993-1-1:1994

X	Comb.	Sfruttamento	Classe	Obblig.	NEd	Mx,Ed	Mx,Eff,Ed	Mb,Rd,x	χ,LT	λ adim. LT	L,LT	M,critico	Verifica
148	SLD 13	0.046	1	Si	7273.4	58401.3	29498.3	642783.4	1	0.278	148	8702008.8	Si

Verifica di stabilità per tenso-flessione deviata §5.5.3 - §5.5.4 ENV 1993-1-1:1994

X	Comb.	Sfruttamento	Classe	NEd	Mx,Ed	Mx,Eff,Ed	My,Ed	χ,LT	kLT	ky	M,critico	Wx	Wy	Verifica
148	SLV 3	0.152	1	3437.1	-111070.5	-97412.2	-159.3	1	1	1	8702008.8	245.4	117.7	Si

Verifica di stabilità a taglio anima Y §4.2.4.1.2.4 [4.2.27] NTC18

η	hw	tw	hw/tw max	Verifica
1.2	13.4	0.6	55.46	Si

Verifica di stabilità a taglio anima Y SLD §4.2.4.1.2.4 [4.2.27] NTC18

η	hw	tw	hw/tw max	Verifica
1.2	13.4	0.6	55.46	Si

Verifiche a deformabilità

Mensola X: No; Mensola Y: No.

Frecce lungo X

Ascissa freccia	Combinazione	Freccia	Luce	L/f	L/f,min	Tipo	Verifica
128.3	SLE RA 1	0	148	10000	250	Totale	Si
83.9	SLE RA 31	0	148	10000	250	Totale	Si
83.9	SLE RA 30	0	148	10000	250	Totale	Si
83.9	SLE RA 29	0	148	10000	250	Totale	Si
83.9	SLE RA 28	0	148	10000	250	Totale	Si

Ascissa freccia	Combinazione	Freccia	Luce	L/f	L/f,min	Tipo	Verifica
4.9	SLE RA 2	0	148	10000	350	Variabile	Si
83.9	SLE RA 31	0	148	10000	350	Variabile	Si
83.9	SLE RA 30	0	148	10000	350	Variabile	Si
83.9	SLE RA 29	0	148	10000	350	Variabile	Si
83.9	SLE RA 28	0	148	10000	350	Variabile	Si

Frecce lungo Y

Ascissa freccia	Combinazione	Freccia	Luce	L/f	L/f,min	Tipo	Verifica
88.8	SLE RA 1	0.002	148	10000	250	Totale	Si
88.8	SLE RA 31	0.002	148	10000	250	Totale	Si
88.8	SLE RA 30	0.002	148	10000	250	Totale	Si
88.8	SLE RA 29	0.002	148	10000	250	Totale	Si
88.8	SLE RA 28	0.002	148	10000	250	Totale	Si
83.9	SLE RA 2	0	148	10000	350	Variabile	Si
83.9	SLE RA 31	0.001	148	10000	350	Variabile	Si
83.9	SLE RA 30	0.001	148	10000	350	Variabile	Si
83.9	SLE RA 29	0	148	10000	350	Variabile	Si
83.9	SLE RA 28	0	148	10000	350	Variabile	Si

Superelemento in acciaio composto dall'asta 145

Caratteristiche del materiale

Acciaio: S275, fyk = 2750

Caratteristiche geometriche

Lunghezza: 299
Nodo iniziale: 63 Nodo finale: 62
Cerniera iniziale: No Cerniera finale: No
Sovraresistenza: 0% Sisma Z: No

Caratteristiche della sezione

Sezione	Rotazione	Area	Jx	Jy	ix	iy	Wx	Wy	Wplx	Wply
HEA160	0	38.82	1674.7	615.62	6.57	3.98	220.36	76.95	245.43	117.67

Verifiche di resistenza

Verifiche a forza assiale §4.2.4.1.2.1 - §4.2.4.1.2.2 NTC18

X	Comb.	Sfruttamento	Classe	NEd	Nc,Rd	Nt,Rd	Riduzione da taglio	ρx	ρy	Verifica
0	SLU 132	0.129		13155.4		101662.9	1	0	0	Si

Verifiche a forza assiale SLD §4.2.4.1.2.1 - §4.2.4.1.2.2 NTC18

X	Comb.	Sfruttamento	Classe	NEd	Nc,Rd	Nt,Rd	Riduzione da taglio	ρx	ρy	Verifica
289	SLD 6	0.07		7115.7		101662.9	1	0	0	Si

Verifica a taglio Y §4.2.4.1.2.4 NTC18

X	Comb.	Sfruttamento	VEd	Vc,Rd	Av	Interazione taglio-torsione	Riduzione torsione	Verifica
299	SLV 2	0.041	-828.6	20045.7	13.26	Considerata	1	Si

Verifica a taglio Y SLD §4.2.4.1.2.4 NTC18

X	Comb.	Sfruttamento	VEd	Vc,Rd	Av	Interazione taglio-torsione	Riduzione torsione	Verifica
299	SLD 1	0.02	-396.1	20045.7	13.26	Considerata	1	Si

Verifica a presso/tenso flessione retta X §§ 4.2.4.1.2.3 - 4.2.4.1.2.6 - 4.2.4.1.2.7 - 4.2.4.1.2.8 NTC18

Verifiche eseguite utilizzando la formula conservativa (6.2) §6.2.1 EN 1993-1-1:2005.

X	Comb.	Sfruttamento	Classe	NEd	NRd	Rid. NRd da VEd	Mx,Ed	Mx,Rd	Rid. Mx,Rd da VEd	Rid. Mx,Rd da NEd	ρx	ρy	Verifica
0	SLU 132	0.145	1	13155.4	101662.9	1	10066	642783	1		0	0	Si

Verifica a presso/tenso flessione deviata §§ 4.2.4.1.2.3 - 4.2.4.1.2.6 - 4.2.4.1.2.7 - 4.2.4.1.2.8 NTC18

Verifiche eseguite utilizzando la formula conservativa (6.2) §6.2.1 EN 1993-1-1:2005.

X	Comb.	Sfruttamento	Classe	NEd	NRd	Rid. NRd da VEd	Mx,Ed	Mx,Rd	My,Ed	My,Rd	Rid. Mx,Rd da VEd	Rid. Mx,Rd da NEd	Rid. My,Rd da VEd	Rid. My,Rd da NEd	α	β	ρx	ρy	Verifica
299	SLV 2	0.263	1	7115.7	101662.9	1	123067	642783	457	308186	1		1				0	0	Si

Verifica a presso/tenso flessione deviata SLD §§ 4.2.4.1.2.3 - 4.2.4.1.2.6 - 4.2.4.1.2.7 - 4.2.4.1.2.8 NTC18

Verifiche eseguite utilizzando la formula conservativa (6.2) §6.2.1 EN 1993-1-1:2005.

X	Comb.	Sfruttamento	Classe	NEd	NRd	Rid. NRd da VEd	Mx,Ed	Mx,Rd	My,Ed	My,Rd	Rid. Mx,Rd da VEd	Rid. Mx,Rd da NEd	Rid. My,Rd da VEd	Rid. My,Rd da NEd	α	β	ρx	ρy	Verifica
299	SLD 2	0.161	1	7115.7	101662.9	1	58401	642783	175	308186	1		1				0	0	Si

Verifiche ad instabilità

Caratteristiche iniziali

Membratura principale per controllo snellezza; Calcolo di snellezze ed N critici condotti secondo gli assi principali;
Curva X: b; Curva Y: c; Svergolamento: Carico all'estradosso; Curva svergolamento: b;

Dati per instabilità attorno a x

Numero rit.	Presente	Ascissa	Campata	βx/m	Vincolo a entrambi estremi	λx/m	λVer
1	Si	0					

Numero rit.	Presente	Ascissa	Campata	βx/m	Vincolo a entrambi estremi	λx/m	λVer
			1-2	1	Si	45.5	Si, (<200)
2	Si	299					

Dati per instabilità attorno a y

Numero rit.	Presente	Ascissa	Campata	βy/n	k,LT	kw,LT	Vincolo a entrambi estremi	λy/n	λVer
1	Si	0							
			1-2	1	1	1	Si	75.1	Si, (<200)
2	Si	299							

Verifica di stabilità per tenso-flessione deviata §5.5.3 - §5.5.4 ENV 1993-1-1:1994

X	Comb.	Sfruttamento	Classe	NEd	Mx,Ed	Mx,Eff,Ed	My,Ed	χ,LT	kLT	ky	M,critico	Wx	Wy	Verifica
299	SLV 2	0.178	1	7115.7	123067.1	94791.1	457.1	0.836	1	1	1151208.3	245.4	117.7	Si

Verifica di stabilità per tenso-flessione deviata SLD §5.5.3 - §5.5.4 ENV 1993-1-1:1994

X	Comb.	Sfruttamento	Classe	NEd	Mx,Ed	Mx,Eff,Ed	My,Ed	χ,LT	kLT	ky	M,critico	Wx	Wy	Verifica
299	SLD 2	0.057	1	7115.7	58401.3	30125.3	174.8	0.836	1	1	1151208.3	245.4	117.7	Si

Verifica di stabilità a taglio anima Y §4.2.4.1.2.4 [4.2.27] NTC18

η	hw	tw	hw/tw max	Verifica
1.2	13.4	0.6	55.46	Si

Verifica di stabilità a taglio anima Y SLD §4.2.4.1.2.4 [4.2.27] NTC18

η	hw	tw	hw/tw max	Verifica
1.2	13.4	0.6	55.46	Si

Verifiche a deformabilità

Mensola X: No; Mensola Y: No.

Frecce lungo X

Ascissa freccia	Combinazione	Freccia	Luce	L/f	L/f,min	Tipo	Verifica
149.5	SLE RA 1	0	299	10000	250	Totale	Si
149.5	SLE RA 31	0	299	10000	250	Totale	Si
149.5	SLE RA 30	0	299	10000	250	Totale	Si
149.5	SLE RA 29	0	299	10000	250	Totale	Si
149.5	SLE RA 28	0	299	10000	250	Totale	Si
149.5	SLE RA 2	0	299	10000	350	Variabile	Si
149.5	SLE RA 31	0	299	10000	350	Variabile	Si
149.5	SLE RA 30	0	299	10000	350	Variabile	Si
149.5	SLE RA 29	0	299	10000	350	Variabile	Si
149.5	SLE RA 28	0	299	10000	350	Variabile	Si

Frecce lungo Y

Ascissa freccia	Combinazione	Freccia	Luce	L/f	L/f,min	Tipo	Verifica
149.5	SLE RA 1	0.01	299	10000	250	Totale	Si
149.5	SLE RA 31	0.013	299	10000	250	Totale	Si
149.5	SLE RA 30	0.013	299	10000	250	Totale	Si
149.5	SLE RA 29	0.013	299	10000	250	Totale	Si
149.5	SLE RA 28	0.013	299	10000	250	Totale	Si
149.5	SLE RA 2	0	299	10000	350	Variabile	Si
139.5	SLE RA 31	0.003	299	10000	350	Variabile	Si
139.5	SLE RA 30	0.003	299	10000	350	Variabile	Si
149.5	SLE RA 29	0.003	299	10000	350	Variabile	Si
149.5	SLE RA 28	0.003	299	10000	350	Variabile	Si

Superelemento in acciaio composto dall'asta 146

Caratteristiche del materiale

Acciaio: S275, fyk = 2750

Caratteristiche geometriche

Lunghezza: 148
Nodo iniziale: 62 Nodo finale: 61
Cerniera iniziale: No Cerniera finale: Svincolo: M2, M3
Sovraresistenza: 0% Sisma Z: No

Caratteristiche della sezione

Sezione	Rotazione	Area	Jx	Jy	ix	iy	Wx	Wy	Wplx	Wply
HEA160	0	38.82	1674.7	615.62	6.57	3.98	220.36	76.95	245.43	117.67

Verifiche di resistenza

Verifiche a forza assiale §4.2.4.1.2.1 - §4.2.4.1.2.2 NTC18

X	Comb.	Sfruttamento	Classe	NEd	Nc,Rd	Nt,Rd	Riduzione da taglio	ρx	ρy	Verifica
74	SLU 131	0.107		10878.2		101662.9	1	0	0	Si

Verifiche a forza assiale SLD §4.2.4.1.2.1 - §4.2.4.1.2.2 NTC18

X	Comb.	Sfruttamento	Classe	NEd	Nc,Rd	Nt,Rd	Riduzione da taglio	ρx	ρy	Verifica
148	SLD 3	0.072		7273.4		101662.9	1	0	0	Si

Verifica a taglio Y §4.2.4.1.2.4 NTC18

X	Comb.	Sfruttamento	VEd	Vc,Rd	Av	Interazione taglio-torsione	Riduzione torsione	Verifica
0	SLV 1	0.043	854.1	19959.2	13.26	Considerata	1	Si

Verifica a taglio Y SLD §4.2.4.1.2.4 NTC18

X	Comb.	Sfruttamento	VEd	Vc,Rd	Av	Interazione taglio-torsione	Riduzione torsione	Verifica
0	SLD 1	0.021	417.2	20012.5	13.26	Considerata	1	Si

Verifica a torsione §4.2.4.1.2.5 NTC18

X	Comb.	Sfruttamento torsione	TEd	TRd	Riduzione taglio resistente	Sfruttamento taglio-torsione	τEd,totale	τRd	Verifica
78.9	SLV 5	0.036	523.1	14685.6	Considerata				Si

Verifica a torsione SLD §4.2.4.1.2.5 NTC18

X	Comb.	Sfruttamento torsione	TEd	TRd	Riduzione taglio resistente	Sfruttamento taglio-torsione	τEd,totale	τRd	Verifica
78.9	SLD 5	0.014	199.2	14685.6	Considerata				Si

Verifica a presso/tenso flessione retta X §§ 4.2.4.1.2.3 - 4.2.4.1.2.6 - 4.2.4.1.2.7 - 4.2.4.1.2.8 NTC18

Verifiche eseguite utilizzando la formula conservativa (6.2) §6.2.1 EN 1993-1-1:2005.

X	Comb.	Sfruttamento	Classe	NEd	NRd	Rid. NRd da VEd	Mx,Ed	Mx,Rd	Rid. Mx,Rd da VEd	Rid. Mx,Rd da NEd	ρx	ρy	Verifica
78.9	SLV 4	0.174	1	8737	101662.9	1	56601	642783	1		0	0	Si

Verifica a presso/tenso flessione retta X SLD §§ 4.2.4.1.2.3 - 4.2.4.1.2.6 - 4.2.4.1.2.7 - 4.2.4.1.2.8 NTC18

Verifiche eseguite utilizzando la formula conservativa (6.2) §6.2.1 EN 1993-1-1:2005.

X	Comb.	Sfruttamento	Classe	NEd	NRd	Rid. NRd da VEd	Mx,Ed	Mx,Rd	Rid. Mx,Rd da VEd	Rid. Mx,Rd da NEd	ρx	ρy	Verifica
0	SLD 4	0.162	1	7273.4	101662.9	1	58401	642783	1		0	0	Si

Verifica a presso/tenso flessione deviata §§ 4.2.4.1.2.3 - 4.2.4.1.2.6 - 4.2.4.1.2.7 - 4.2.4.1.2.8 NTC18

Verifiche eseguite utilizzando la formula conservativa (6.2) §6.2.1 EN 1993-1-1:2005.

X	Comb.	Sfruttamento	Classe	NEd	NRd	Rid. NRd da VEd	Mx,Ed	Mx,Rd	My,Ed	My,Rd	Rid. Mx,Rd da VEd	Rid. Mx,Rd da NEd	Rid. My,Rd da VEd	Rid. My,Rd da NEd	α	β	ρx	ρy	Verifica
0	SLV 1	0.278	1	8737	101662.9	1	123067	642783	159	308186	1		1				0	0	Si

Verifica a presso/tenso flessione deviata SLD §§ 4.2.4.1.2.3 - 4.2.4.1.2.6 - 4.2.4.1.2.7 - 4.2.4.1.2.8 NTC18

Verifiche eseguite utilizzando la formula conservativa (6.2) §6.2.1 EN 1993-1-1:2005.

X	Comb.	Sfruttamento	Classe	NEd	NRd	Rid. NRd da VEd	Mx,Ed	Mx,Rd	My,Ed	My,Rd	Rid. Mx,Rd da VEd	Rid. Mx,Rd da NEd	Rid. My,Rd da VEd	Rid. My,Rd da NEd	α	β	ρx	ρy	Verifica
0	SLD 5	0.098	1	6442.9	101662.9	1	21719	642783	201	308186	1		1				0	0	Si

Verifiche ad instabilità

Caratteristiche iniziali

Membratura principale per controllo snellezza; Calcolo di snellezze ed N critici condotti secondo gli assi principali;
Curva X: b; Curva Y: c; Svergolamento: Carico all'estradosso; Curva svergolamento: b;

Dati per instabilità attorno a x

Numero rit.	Presente	Ascissa	Campata	βx/m	Vincolo a entrambi estremi	λx/m	λVer
1	Si	0					
			1-2	1	Si	22.5	Si, (<200)
2	Si	148					

Dati per instabilità attorno a y

Numero rit.	Presente	Ascissa	Campata	βy/n	k,LT	kw,LT	Vincolo a entrambi estremi	λy/n	λVer
1	Si	0							
			1-2	1	1	1	Si	37.2	Si, (<200)
2	Si	148							

Verifica a svergolamento con trazione §4.2.4.1.3.2 NTC18 - §5.5.3 ENV 1993-1-1:1994

X	Comb.	Sfruttamento	Classe	Obblig.	NEd	Mx,Ed	Mx,Eff,Ed	Mb,Rd,x	χ,LT	λ adim. LT	L,LT	M,critico	Verifica
78.9	SLV 14	0.061	1	Si	3437.1	-52663.5	-39005.3	642783.4	1	0.278	148	8702008.8	Si

Verifica a svergolamento con trazione SLD §4.2.4.1.3.2 NTC18 - §5.5.3 ENV 1993-1-1:1994

X	Comb.	Sfruttamento	Classe	Obblig.	NEd	Mx,Ed	Mx,Eff,Ed	Mb,Rd,x	χ,LT	λ adim. LT	L,LT	M,critico	Verifica
0	SLD 1	0.046	1	Si	7273.4	58401.3	29498.3	642783.4	1	0.278	148	8702008.8	Si

Verifica di stabilità per tenso-flessione deviata §5.5.3 - §5.5.4 ENV 1993-1-1:1994

X	Comb.	Sfruttamento	Classe	NEd	Mx,Ed	Mx,Eff,Ed	My,Ed	χ,LT	kLT	ky	M,critico	Wx	Wy	Verifica
0	SLV 15	0.152	1	3437.1	-111070.5	-97412.2	-159.3	1	1	1	8702008.8	245.4	117.7	Si

Verifica di stabilità a taglio anima Y §4.2.4.1.2.4 [4.2.27] NTC18

η	hw	tw	hw/tw max	Verifica
1.2	13.4	0.6	55.46	Si

Verifica di stabilità a taglio anima Y SLD §4.2.4.1.2.4 [4.2.27] NTC18

η	hw	tw	hw/tw max	Verifica
1.2	13.4	0.6	55.46	Si

Verifiche a deformabilità

Mensola X: No; Mensola Y: No.

Frecce lungo X

Ascissa freccia	Combinazione	Freccia	Luce	L/f	L/f,min	Tipo	Verifica
19.7	SLE RA 1	0	148	10000	250	Totale	Si
69.1	SLE RA 31	0	148	10000	250	Totale	Si
69.1	SLE RA 30	0	148	10000	250	Totale	Si
69.1	SLE RA 29	0	148	10000	250	Totale	Si
69.1	SLE RA 28	0	148	10000	250	Totale	Si
143.1	SLE RA 2	0	148	10000	350	Variabile	Si
64.1	SLE RA 31	0	148	10000	350	Variabile	Si
64.1	SLE RA 30	0	148	10000	350	Variabile	Si
64.1	SLE RA 29	0	148	10000	350	Variabile	Si
64.1	SLE RA 28	0	148	10000	350	Variabile	Si

Frecce lungo Y

Ascissa freccia	Combinazione	Freccia	Luce	L/f	L/f,min	Tipo	Verifica
59.2	SLE RA 1	0.002	148	10000	250	Totale	Si
59.2	SLE RA 31	0.002	148	10000	250	Totale	Si
59.2	SLE RA 30	0.002	148	10000	250	Totale	Si
59.2	SLE RA 29	0.002	148	10000	250	Totale	Si
59.2	SLE RA 28	0.002	148	10000	250	Totale	Si
64.1	SLE RA 2	0	148	10000	350	Variabile	Si
64.1	SLE RA 31	0	148	10000	350	Variabile	Si
64.1	SLE RA 30	0	148	10000	350	Variabile	Si
64.1	SLE RA 29	0	148	10000	350	Variabile	Si
64.1	SLE RA 28	0	148	10000	350	Variabile	Si

Superelemento in acciaio composto dall'asta 147

Caratteristiche del materiale

Acciaio: S275, fyk = 2750

Caratteristiche geometriche

Lunghezza: 215.2
Nodo iniziale: 21 Nodo finale: 63
Cerniera iniziale: Svincolo: M2, M3 Cerniera finale: Svincolo: M2, M3
Sovraresistenza: 0% Sisma Z: No

Caratteristiche della sezione

Sezione	Rotazione	Area	Jx	Jy	ix	iy	Wx	Wy	Wplx	Wply
HEA160	0	38.82	1674.7	615.62	6.57	3.98	220.36	76.95	245.43	117.67

Verifiche di resistenza

Verifiche a forza assiale §4.2.4.1.2.1 - §4.2.4.1.2.2 NTC18

X	Comb.	Sfruttamento	Classe	NEd	Nc,Rd	Nt,Rd	Riduzione da taglio	ρx	ρy	Verifica
215.2	SLV 1	0.036		3632		101662.9	1	0	0	Si

Verifiche a forza assiale SLD §4.2.4.1.2.1 - §4.2.4.1.2.2 NTC18

X	Comb.	Sfruttamento	Classe	NEd	Nc,Rd	Nt,Rd	Riduzione da taglio	ρx	ρy	Verifica
215.2	SLD 2	0.018		1867.6		101662.9	1	0	0	Si

Verifica a taglio Y §4.2.4.1.2.4 NTC18

X	Comb.	Sfruttamento	VEd	Vc,Rd	Av	Interazione taglio-torsione	Riduzione torsione	Verifica
0	SLU 123	0.002	37.7	20045.7	13.26	Considerata	1	Si

Verifica a taglio Y SLD §4.2.4.1.2.4 NTC18

X	Comb.	Sfruttamento	VEd	Vc,Rd	Av	Interazione taglio-torsione	Riduzione torsione	Verifica
215.2	SLD 5	0.001	-29	19889.7	13.26	Considerata	0.99	Si

Verifica a torsione §4.2.4.1.2.5 NTC18

X	Comb.	Sfruttamento torsione	TEd	TRd	Riduzione taglio resistente	Sfruttamento taglio-torsione	τEd,totale	τRd	Verifica
114.7	SLV 5	0.051	-747.6	14685.6	Considerata				Si

Verifica a torsione SLD §4.2.4.1.2.5 NTC18

X	Comb.	Sfruttamento torsione	TEd	TRd	Riduzione taglio resistente	Sfruttamento taglio-torsione	τEd,totale	τRd	Verifica
114.7	SLD 5	0.019	-284.6	14685.6	Considerata				Si

Verifica a flessione semplice X SLD §§ 4.2.4.1.2.3 - 4.2.4.1.2.6 - 4.2.4.1.2.7 - 4.2.4.1.2.8 NTC18

X	Comb.	Sfruttamento	Classe	Mx,Ed	Mx,Rd	Rid. Mx,Rd da VEd	ρx	ρy	Verifica
107.6	SLD 9	0.002	1	-1561.1	642783.4	1	0	0	Si

Verifica a presso/tenso flessione retta X §§ 4.2.4.1.2.3 - 4.2.4.1.2.6 - 4.2.4.1.2.7 - 4.2.4.1.2.8 NTC18

Verifiche eseguite utilizzando la formula conservativa (6.2) §6.2.1 EN 1993-1-1:2005.

X	Comb.	Sfruttamento	Classe	NEd	NRd	Rid. NRd da VEd	Mx,Ed	Mx,Rd	Rid. Mx,Rd da VEd	Rid. Mx,Rd da NEd	ρx	ρy	Verifica
107.6	SLV 1	0.038	1	3616.7	101662.9	1	-1561	642783	1		0	0	Si

Verifica a presso/tenso flessione retta X SLD §§ 4.2.4.1.2.3 - 4.2.4.1.2.6 - 4.2.4.1.2.7 - 4.2.4.1.2.8 NTC18

Verifiche eseguite utilizzando la formula conservativa (6.2) §6.2.1 EN 1993-1-1:2005.

X	Comb.	Sfruttamento	Classe	NEd	NRd	Rid. NRd da VEd	Mx,Ed	Mx,Rd	Rid. Mx,Rd da VEd	Rid. Mx,Rd da NEd	ρx	ρy	Verifica
107.6	SLD 2	0.021	1	1852.4	101662.9	1	-1561	642783	1		0	0	Si

Verifiche ad instabilità

Caratteristiche iniziali

Membratura principale per controllo snellezza; Calcolo di snellezze ed N critici condotti secondo gli assi principali;
Curva X: b; Curva Y: c; Svergolamento: Carico all'estradosso; Curva svergolamento: b;

Dati per instabilità attorno a x

Numero rit.	Presente	Ascissa	Campata	βx/m	Vincolo a entrambi estremi	λx/m	λVer
1	Si	0					
			1-2	1	Si	32.8	Si, (<200)
2	Si	215.2					

Dati per instabilità attorno a y

Numero rit.	Presente	Ascissa	Campata	βy/n	k,LT	kw,LT	Vincolo a entrambi estremi	λy/n	λVer
1	Si	0							
			1-2	1	1	1	Si	54	Si, (<200)
2	Si	215.2							

Verifica a svergolamento SLD §4.2.4.1.3.2 NTC18

X	Comb.	Sfruttamento	Classe	Obblig.	Mx,Ed	Mb,Rd,x	χ,LT	λ adim. LT	L,LT	M,critico	Verifica
107.6	SLD 9	0.003	1	Si	-1561.1	588430.1	0.915	0.604	215.2	1851896.4	Si

Verifica di stabilità per pressoflessione §C.4.2.4.1.3.3.2 NTC18

X	Comb.	Sfruttamento	Classe	NEd	NRk	Mx,Ed max	Mx,Rk	My,Ed max	My,Rk	χ,x	χ,y	kxx	kxy	kyx	kyy	χ,LT	Verifica
0	SLV 15	0.038	1	-2787	106746.1	1561.1	674922.6	1.1	323595.1	0.935	0.772	0.955	0.583	0.997	0.972	0.915	Si

Verifica di stabilità per pressoflessione SLD §C.4.2.4.1.3.3.2 NTC18

X	Comb.	Sfruttamento	Classe	NEd	NRk	Mx,Ed max	Mx,Rk	My,Ed max	My,Rk	χ,x	χ,y	kxx	kxy	kyx	kyy	χ,LT	Verifica
0	SLD 15	0.016	1	-1022.6	106746.1	1561.1	674922.6	1.1	323595.1	0.935	0.772	0.952	0.575	0.999	0.958	0.915	Si

Verifica di stabilità a taglio anima Y §4.2.4.1.2.4 [4.2.27] NTC18

η	hw	tw	hw/tw max	Verifica
1.2	13.4	0.6	55.46	Si

Verifica di stabilità a taglio anima Y SLD §4.2.4.1.2.4 [4.2.27] NTC18

η	hw	tw	hw/tw max	Verifica
1.2	13.4	0.6	55.46	Si

Verifiche a deformabilità

Mensola X: No; Mensola Y: No.

Frecce lungo X

Ascissa freccia	Combinazione	Freccia	Luce	L/f	L/f,min	Tipo	Verifica
107.6	SLE RA 1	0	215.2	10000	250	Totale	Si
107.6	SLE RA 31	0	215.2	10000	250	Totale	Si
107.6	SLE RA 30	0	215.2	10000	250	Totale	Si
107.6	SLE RA 29	0	215.2	10000	250	Totale	Si
107.6	SLE RA 28	0	215.2	10000	250	Totale	Si
208	SLE RA 2	0	215.2	10000	350	Variabile	Si
200.8	SLE RA 31	0	215.2	10000	350	Variabile	Si
200.8	SLE RA 30	0	215.2	10000	350	Variabile	Si
164.9	SLE RA 29	0	215.2	10000	350	Variabile	Si
200.8	SLE RA 28	0	215.2	10000	350	Variabile	Si

Frecce lungo Y

Ascissa freccia	Combinazione	Freccia	Luce	L/f	L/f,min	Tipo	Verifica
107.6	SLE RA 1	-0.002	215.2	10000	250	Totale	Si
107.6	SLE RA 31	-0.002	215.2	10000	250	Totale	Si
107.6	SLE RA 30	-0.002	215.2	10000	250	Totale	Si
107.6	SLE RA 29	-0.002	215.2	10000	250	Totale	Si
107.6	SLE RA 28	-0.002	215.2	10000	250	Totale	Si
186.5	SLE RA 2	0	215.2	10000	350	Variabile	Si
200.8	SLE RA 31	0	215.2	10000	350	Variabile	Si
200.8	SLE RA 30	0	215.2	10000	350	Variabile	Si
179.3	SLE RA 29	0	215.2	10000	350	Variabile	Si
179.3	SLE RA 28	0	215.2	10000	350	Variabile	Si

Superelemento in acciaio composto dall'asta 148

Caratteristiche del materiale

Acciaio: S275, fyk = 2750

Caratteristiche geometriche

Lunghezza: 215.2
Nodo iniziale: 20 Nodo finale: 62
Cerniera iniziale: Svincolo: M2, M3 Cerniera finale: Svincolo: M2, M3
Sovraresistenza: 0% Sisma Z: No

Caratteristiche della sezione

Sezione	Rotazione	Area	Jx	Jy	ix	iy	Wx	Wy	Wplx	Wply
HEA160	0	38.82	1674.7	615.62	6.57	3.98	220.36	76.95	245.43	117.67

Verifiche di resistenza

Verifiche a forza assiale §4.2.4.1.2.1 - §4.2.4.1.2.2 NTC18

X	Comb.	Sfruttamento	Classe	NEd	Nc,Rd	Nt,Rd	Riduzione da taglio	ρx	ρy	Verifica
215.2	SLV 13	0.036		3632		101662.9	1	0	0	Si

Verifiche a forza assiale SLD §4.2.4.1.2.1 - §4.2.4.1.2.2 NTC18

X	Comb.	Sfruttamento	Classe	NEd	Nc,Rd	Nt,Rd	Riduzione da taglio	ρx	ρy	Verifica
215.2	SLD 13	0.018		1867.6		101662.9	1	0	0	Si

Verifica a taglio Y §4.2.4.1.2.4 NTC18

X	Comb.	Sfruttamento	VEd	Vc,Rd	Av	Interazione taglio-torsione	Riduzione torsione	Verifica
0	SLU 98	0.002	37.7	20045.7	13.26	Considerata	1	Si

Verifica a taglio Y SLD §4.2.4.1.2.4 NTC18

X	Comb.	Sfruttamento	VEd	Vc,Rd	Av	Interazione taglio-torsione	Riduzione torsione	Verifica
215.2	SLD 10	0.001	-29	19889.7	13.26	Considerata	0.99	Si

Verifica a torsione §4.2.4.1.2.5 NTC18

X	Comb.	Sfruttamento torsione	TEd	TRd	Riduzione taglio resistente	Sfruttamento taglio-torsione	τEd,totale	τRd	Verifica
215.2	SLV 10	0.051	747.6	14685.6	Considerata				Si

Verifica a torsione SLD §4.2.4.1.2.5 NTC18

X	Comb.	Sfruttamento torsione	TEd	TRd	Riduzione taglio resistente	Sfruttamento taglio-torsione	τEd,totale	τRd	Verifica
215.2	SLD 10	0.019	284.6	14685.6	Considerata				Si

Verifica a flessione semplice X SLD §§ 4.2.4.1.2.3 - 4.2.4.1.2.6 - 4.2.4.1.2.7 - 4.2.4.1.2.8 NTC18

X	Comb.	Sfruttamento	Classe	Mx,Ed	Mx,Rd	Rid. Mx,Rd da VEd	ρx	ρy	Verifica
107.6	SLD 5	0.002	1	-1561.1	642783.4	1	0	0	Si

Verifica a presso/tenso flessione retta X §§ 4.2.4.1.2.3 - 4.2.4.1.2.6 - 4.2.4.1.2.7 - 4.2.4.1.2.8 NTC18

Verifiche eseguite utilizzando la formula conservativa (6.2) §6.2.1 EN 1993-1-1:2005.

X	Comb.	Sfruttamento	Classe	NEd	NRd	Rid. NRd da VEd	Mx,Ed	Mx,Rd	Rid. Mx,Rd da VEd	Rid. Mx,Rd da NEd	ρx	ρy	Verifica
107.6	SLV 14	0.038	1	3616.7	101662.9	1	-1561	642783	1		0	0	Si

Verifica a presso/tenso flessione retta X SLD §§ 4.2.4.1.2.3 - 4.2.4.1.2.6 - 4.2.4.1.2.7 - 4.2.4.1.2.8 NTC18

Verifiche eseguite utilizzando la formula conservativa (6.2) §6.2.1 EN 1993-1-1:2005.

X	Comb.	Sfruttamento	Classe	NEd	NRd	Rid. NRd da VEd	Mx,Ed	Mx,Rd	Rid. Mx,Rd da VEd	Rid. Mx,Rd da NEd	ρx	ρy	Verifica
107.6	SLD 13	0.021	1	1852.4	101662.9	1	-1561	642783	1		0	0	Si

Verifiche ad instabilità

Caratteristiche iniziali

Membratura principale per controllo snellezza; Calcolo di snellezze ed N critici condotti secondo gli assi principali;
Curva X: b; Curva Y: c; Svergolamento: Carico all'estradosso; Curva svergolamento: b;

Dati per instabilità attorno a x

Numero rit.	Presente	Ascissa	Campata	βx/m	Vincolo a entrambi estremi	λx/m	λVer
1	Si	0					
			1-2	1	Si	32.8	Si, (<200)
2	Si	215.2					

Dati per instabilità attorno a y

Numero rit.	Presente	Ascissa	Campata	βy/n	k,LT	kw,LT	Vincolo a entrambi estremi	λy/n	λVer
1	Si	0							
			1-2	1	1	1	Si	54	Si, (<200)
2	Si	215.2							

Verifica a svergolamento SLD §4.2.4.1.3.2 NTC18

X	Comb.	Sfruttamento	Classe	Obblig.	Mx,Ed	Mb,Rd,x	χ,LT	λ adim. LT	L,LT	M,critico	Verifica
107.6	SLD 5	0.003	1	Si	-1561.1	588430.3	0.915	0.604	215.2	1851899.2	Si

Verifica di stabilità per pressoflessione §C.4.2.4.1.3.3.2 NTC18

X	Comb.	Sfruttamento	Classe	NEd	NRk	Mx,Ed max	Mx,Rk	My,Ed max	My,Rk	χ,x	χ,y	kxx	kxy	kyx	kyy	χ,LT	Verifica
0	SLV 3	0.038	1	-2787	106746.1	1561.1	674922.6	0	323595.1	0.935	0.772	0.955	0.368	0.997	0.614	0.915	Si

Verifica di stabilità per pressoflessione SLD §C.4.2.4.1.3.3.2 NTC18

X	Comb.	Sfruttamento	Classe	NEd	NRk	Mx,Ed max	Mx,Rk	My,Ed max	My,Rk	χ,x	χ,y	kxx	kxy	kyx	kyy	χ,LT	Verifica
0	SLD 3	0.016	1	-1022.6	106746.1	1561.1	674922.6	0	323595.1	0.935	0.772	0.952	0.363	0.999	0.605	0.915	Si

Verifica di stabilità a taglio anima Y §4.2.4.1.2.4 [4.2.27] NTC18

η	hw	tw	hw/tw max	Verifica
1.2	13.4	0.6	55.46	Si

Verifica di stabilità a taglio anima Y SLD §4.2.4.1.2.4 [4.2.27] NTC18

η	hw	tw	hw/tw max	Verifica
1.2	13.4	0.6	55.46	Si

Verifiche a deformabilità

Mensola X: No; Mensola Y: No.

Frecce lungo X

Ascissa freccia	Combinazione	Freccia	Luce	L/f	L/f,min	Tipo	Verifica
172.1	SLE RA 1	0	215.2	10000	250	Totale	Si
172.1	SLE RA 31	0	215.2	10000	250	Totale	Si
172.1	SLE RA 30	0	215.2	10000	250	Totale	Si
172.1	SLE RA 29	0	215.2	10000	250	Totale	Si
172.1	SLE RA 28	0	215.2	10000	250	Totale	Si
193.6	SLE RA 2	0	215.2	10000	350	Variabile	Si
193.6	SLE RA 31	0	215.2	10000	350	Variabile	Si
193.6	SLE RA 30	0	215.2	10000	350	Variabile	Si
193.6	SLE RA 29	0	215.2	10000	350	Variabile	Si
193.6	SLE RA 28	0	215.2	10000	350	Variabile	Si

Frecce lungo Y

Ascissa freccia	Combinazione	Freccia	Luce	L/f	L/f,min	Tipo	Verifica
107.6	SLE RA 1	-0.002	215.2	10000	250	Totale	Si
107.6	SLE RA 31	-0.002	215.2	10000	250	Totale	Si
107.6	SLE RA 30	-0.002	215.2	10000	250	Totale	Si
107.6	SLE RA 29	-0.002	215.2	10000	250	Totale	Si
107.6	SLE RA 28	-0.002	215.2	10000	250	Totale	Si
172.1	SLE RA 2	0	215.2	10000	350	Variabile	Si
179.3	SLE RA 31	0	215.2	10000	350	Variabile	Si
179.3	SLE RA 30	0	215.2	10000	350	Variabile	Si
172.1	SLE RA 29	0	215.2	10000	350	Variabile	Si
172.1	SLE RA 28	0	215.2	10000	350	Variabile	Si

Superelemento in acciaio composto dall'asta 149

Caratteristiche del materiale

Acciaio: S275, fyk = 2750

Caratteristiche geometriche

Lunghezza: 105.1
Nodo iniziale: 63 Nodo finale: 88
Cerniera iniziale: Svincolo: M2, M3 Cerniera finale: Svincolo: M2, M3
Sovraresistenza: 0% Sisma Z: No

Caratteristiche della sezione

Sezione	Rotazione	Area	Jx	Jy	ix	iy	Wx	Wy	Wplx	Wply
HEA160	0	38.82	1674.7	615.62	6.57	3.98	220.36	76.95	245.43	117.67

Verifiche di resistenza

Verifiche a forza assiale §4.2.4.1.2.1 - §4.2.4.1.2.2 NTC18

X	Comb.	Sfruttamento	Classe	NEd	Nc,Rd	Nt,Rd	Riduzione da taglio	ρx	ρy	Verifica
105.1	SLU 120	0.016		1621.9		101662.9	1	0	0	Si

Verifiche a forza assiale SLD §4.2.4.1.2.1 - §4.2.4.1.2.2 NTC18

X	Comb.	Sfruttamento	Classe	NEd	Nc,Rd	Nt,Rd	Riduzione da taglio	ρx	ρy	Verifica
105.1	SLD 13	0.008		851.2		101662.9	1	0	0	Si

Verifica a taglio Y §4.2.4.1.2.4 NTC18

X	Comb.	Sfruttamento	VEd	Vc,Rd	Av	Interazione taglio-torsione	Riduzione torsione	Verifica
0	SLU 86	0.001	18.3	20045.7	13.26	Considerata	1	Si

Verifica a taglio Y SLD §4.2.4.1.2.4 NTC18

X	Comb.	Sfruttamento	VEd	Vc,Rd	Av	Interazione taglio-torsione	Riduzione torsione	Verifica
0	SLD 5	0.001	14.1	19763.7	13.26	Considerata	0.99	Si

Verifica a torsione §4.2.4.1.2.5 NTC18

X	Comb.	Sfruttamento torsione	TEd	TRd	Riduzione taglio resistente	Sfruttamento taglio-torsione	τEd,totale	τRd	Verifica
56.1	SLV 5	0.092	1347	14685.6	Considerata				Si

Verifica a torsione SLD §4.2.4.1.2.5 NTC18

X	Comb.	Sfruttamento torsione	TEd	TRd	Riduzione taglio resistente	Sfruttamento taglio-torsione	τEd,totale	τRd	Verifica
56.1	SLD 5	0.035	512.8	14685.6	Considerata				Si

Verifica a presso/tenso flessione retta X §§ 4.2.4.1.2.3 - 4.2.4.1.2.6 - 4.2.4.1.2.7 - 4.2.4.1.2.8 NTC18

Verifiche eseguite utilizzando la formula conservativa (6.2) §6.2.1 EN 1993-1-1:2005.

X	Comb.	Sfruttamento	Classe	NEd	NRd	Rid. NRd da VEd	Mx,Ed	Mx,Rd	Rid. Mx,Rd da VEd	Rid. Mx,Rd da NEd	ρx	ρy	Verifica
56.1	SLU 87	0.017	1	1612.6	101662.9	1	-479	642783	1		0	0	Si

Verifica a presso/tenso flessione retta X SLD §§ 4.2.4.1.2.3 - 4.2.4.1.2.6 - 4.2.4.1.2.7 - 4.2.4.1.2.8 NTC18

Verifiche eseguite utilizzando la formula conservativa (6.2) §6.2.1 EN 1993-1-1:2005.

X	Comb.	Sfruttamento	Classe	NEd	NRd	Rid. NRd da VEd	Mx,Ed	Mx,Rd	Rid. Mx,Rd da VEd	Rid. Mx,Rd da NEd	ρx	ρy	Verifica
56.1	SLD 14	0.009	1	844.1	101662.9	1	-369	642783	1		0	0	Si

Verifiche ad instabilità

Caratteristiche iniziali

Membratura principale per controllo snellezza; Calcolo di snellezze ed N critici condotti secondo gli assi principali;
Curva X: b; Curva Y: c; Svergolamento: Carico all'estradosso; Curva svergolamento: b;

Dati per instabilità attorno a x

Numero rit.	Presente	Ascissa	Campata	βx/m	Vincolo a entrambi estremi	λx/m	λVer
1	Si	0					
			1-2	1	Si	16	Si, (<200)
2	Si	105.1					

Dati per instabilità attorno a y

Numero rit.	Presente	Ascissa	Campata	βy/n	k,LT	kw,LT	Vincolo a entrambi estremi	λy/n	λVer
1	Si	0							
			1-2	1	1	1	Si	26.4	Si, (<200)
2	Si	105.1							

Verifica di stabilità a taglio anima Y §4.2.4.1.2.4 [4.2.27] NTC18

η	hw	tw	hw/tw max	Verifica
1.2	13.4	0.6	55.46	Si

Verifica di stabilità a taglio anima Y SLD §4.2.4.1.2.4 [4.2.27] NTC18

η	hw	tw	hw/tw max	Verifica
1.2	13.4	0.6	55.46	Si

Verifiche a deformabilità

Mensola X: No; Mensola Y: No.

Frecce lungo X

Ascissa freccia	Combinazione	Freccia	Luce	L/f	L/f,min	Tipo	Verifica
42.1	SLE RA 1	0	105.1	10000	250	Totale	Si
42.1	SLE RA 31	0	105.1	10000	250	Totale	Si
42.1	SLE RA 30	0	105.1	10000	250	Totale	Si
42.1	SLE RA 29	0	105.1	10000	250	Totale	Si
42.1	SLE RA 28	0	105.1	10000	250	Totale	Si
98.1	SLE RA 2	0	105.1	10000	350	Variabile	Si
101.6	SLE RA 31	0	105.1	10000	350	Variabile	Si
101.6	SLE RA 30	0	105.1	10000	350	Variabile	Si
101.6	SLE RA 29	0	105.1	10000	350	Variabile	Si
101.6	SLE RA 28	0	105.1	10000	350	Variabile	Si

Frecce lungo Y

Ascissa freccia	Combinazione	Freccia	Luce	L/f	L/f,min	Tipo	Verifica
52.6	SLE RA 1	0	105.1	10000	250	Totale	Si
52.6	SLE RA 31	0	105.1	10000	250	Totale	Si
52.6	SLE RA 30	0	105.1	10000	250	Totale	Si
52.6	SLE RA 29	0	105.1	10000	250	Totale	Si
52.6	SLE RA 28	0	105.1	10000	250	Totale	Si
24.5	SLE RA 2	0	105.1	10000	350	Variabile	Si
84.1	SLE RA 31	0	105.1	10000	350	Variabile	Si
84.1	SLE RA 30	0	105.1	10000	350	Variabile	Si
84.1	SLE RA 29	0	105.1	10000	350	Variabile	Si
84.1	SLE RA 28	0	105.1	10000	350	Variabile	Si

Superelemento in acciaio composto dall'asta 150

Caratteristiche del materiale

Acciaio: S275, fyk = 2750

Caratteristiche geometriche

Lunghezza: 105.1
Nodo iniziale: 62 Nodo finale: 87
Cerniera iniziale: Svincolo: M2, M3 Cerniera finale: Svincolo: M2, M3
Sovraresistenza: 0% Sisma Z: No

Caratteristiche della sezione

Sezione	Rotazione	Area	Jx	Jy	ix	iy	Wx	Wy	Wplx	Wply
HEA160	0	38.82	1674.7	615.62	6.57	3.98	220.36	76.95	245.43	117.67

Verifiche di resistenza

Verifiche a forza assiale §4.2.4.1.2.1 - §4.2.4.1.2.2 NTC18

X	Comb.	Sfruttamento	Classe	NEd	Nc,Rd	Nt,Rd	Riduzione da taglio	ρx	ρy	Verifica
105.1	SLU 87	0.016		1615.6		101662.9	1	0	0	Si

Verifiche a forza assiale SLD §4.2.4.1.2.1 - §4.2.4.1.2.2 NTC18

X	Comb.	Sfruttamento	Classe	NEd	Nc,Rd	Nt,Rd	Riduzione da taglio	ρx	ρy	Verifica
105.1	SLD 2	0.008		851.2		101662.9	1	0	0	Si

Verifica a taglio Y §4.2.4.1.2.4 NTC18

X	Comb.	Sfruttamento	VEd	Vc,Rd	Av	Interazione taglio-torsione	Riduzione torsione	Verifica
0	SLU 91	0.001	18.3	20045.7	13.26	Considerata	1	Si

Verifica a taglio Y SLD §4.2.4.1.2.4 NTC18

X	Comb.	Sfruttamento	VEd	Vc,Rd	Av	Interazione taglio-torsione	Riduzione torsione	Verifica
0	SLD 10	0.001	14.1	19763.7	13.26	Considerata	0.99	Si

Verifica a torsione §4.2.4.1.2.5 NTC18

X	Comb.	Sfruttamento torsione	TEd	TRd	Riduzione taglio resistente	Sfruttamento taglio-torsione	τEd,totale	τRd	Verifica
105.1	SLV 10	0.092	-1347	14685.6	Considerata				Si

Verifica a torsione SLD §4.2.4.1.2.5 NTC18

X	Comb.	Sfruttamento torsione	TEd	TRd	Riduzione taglio resistente	Sfruttamento taglio-torsione	τEd,totale	τRd	Verifica
105.1	SLD 10	0.035	-512.8	14685.6	Considerata				Si

Verifica a presso/tenso flessione retta X §§ 4.2.4.1.2.3 - 4.2.4.1.2.6 - 4.2.4.1.2.7 - 4.2.4.1.2.8 NTC18

Verifiche eseguite utilizzando la formula conservativa (6.2) §6.2.1 EN 1993-1-1:2005.

X	Comb.	Sfruttamento	Classe	NEd	NRd	Rid. NRd da VEd	Mx,Ed	Mx,Rd	Rid. Mx,Rd da VEd	Rid. Mx,Rd da NEd	ρx	ρy	Verifica
56.1	SLU 120	0.017	1	1606.4	101662.9	1	-479	642783	1		0	0	Si

Verifica a presso/tenso flessione retta X SLD §§ 4.2.4.1.2.3 - 4.2.4.1.2.6 - 4.2.4.1.2.7 - 4.2.4.1.2.8 NTC18

Verifiche eseguite utilizzando la formula conservativa (6.2) §6.2.1 EN 1993-1-1:2005.

X	Comb.	Sfruttamento	Classe	NEd	NRd	Rid. NRd da VEd	Mx,Ed	Mx,Rd	Rid. Mx,Rd da VEd	Rid. Mx,Rd da NEd	ρx	ρy	Verifica
56.1	SLD 2	0.009	1	844.1	101662.9	1	-369	642783	1		0	0	Si

Verifiche ad instabilità

Caratteristiche iniziali

Membratura principale per controllo snellezza; Calcolo di snellezze ed N critici condotti secondo gli assi principali;
Curva X: b; Curva Y: c; Svergolamento: Carico all'estradosso; Curva svergolamento: b;

Dati per instabilità attorno a x

Numero rit.	Presente	Ascissa	Campata	βx/m	Vincolo a entrambi estremi	λx/m	λVer
1	Si	0					
			1-2	1	Si	16	Si, (<200)
2	Si	105.1					

Dati per instabilità attorno a y

Numero rit.	Presente	Ascissa	Campata	βy/n	k,LT	kw,LT	Vincolo a entrambi estremi	λy/n	λVer
1	Si	0							
			1-2	1	1	1	Si	26.4	Si, (<200)
2	Si	105.1							

Verifica di stabilità a taglio anima Y §4.2.4.1.2.4 [4.2.27] NTC18

η	hw	tw	hw/tw max	Verifica
1.2	13.4	0.6	55.46	Si

Verifica di stabilità a taglio anima Y SLD §4.2.4.1.2.4 [4.2.27] NTC18

η	hw	tw	hw/tw max	Verifica
1.2	13.4	0.6	55.46	Si

Verifiche a deformabilità

Mensola X: No; Mensola Y: No.

Frecce lungo X

Ascissa freccia	Combinazione	Freccia	Luce	L/f	L/f,min	Tipo	Verifica
42.1	SLE RA 1	0	105.1	10000	250	Totale	Si
42.1	SLE RA 31	0	105.1	10000	250	Totale	Si
42.1	SLE RA 30	0	105.1	10000	250	Totale	Si
42.1	SLE RA 29	0	105.1	10000	250	Totale	Si
42.1	SLE RA 28	0	105.1	10000	250	Totale	Si
77.1	SLE RA 2	0	105.1	10000	350	Variabile	Si
87.6	SLE RA 31	0	105.1	10000	350	Variabile	Si
87.6	SLE RA 30	0	105.1	10000	350	Variabile	Si
87.6	SLE RA 29	0	105.1	10000	350	Variabile	Si
87.6	SLE RA 28	0	105.1	10000	350	Variabile	Si

Frecce lungo Y

Ascissa freccia	Combinazione	Freccia	Luce	L/f	L/f,min	Tipo	Verifica
52.6	SLE RA 1	0	105.1	10000	250	Totale	Si
52.6	SLE RA 31	0	105.1	10000	250	Totale	Si
52.6	SLE RA 30	0	105.1	10000	250	Totale	Si
52.6	SLE RA 29	0	105.1	10000	250	Totale	Si
52.6	SLE RA 28	0	105.1	10000	250	Totale	Si
24.5	SLE RA 2	0	105.1	10000	350	Variabile	Si
101.6	SLE RA 31	0	105.1	10000	350	Variabile	Si
101.6	SLE RA 30	0	105.1	10000	350	Variabile	Si
101.6	SLE RA 29	0	105.1	10000	350	Variabile	Si

Ascissa freccia	Combinazione	Freccia	Luce	L/f	L/f,min	Tipo	Verifica
101.6	SLE RA 28	0	105.1	10000	350	Variabile	Si

Superelemento in acciaio composto dall'asta 151

Caratteristiche del materiale

Acciaio: S275, fyk = 2750

Caratteristiche geometriche

Lunghezza: 108.7
Nodo iniziale: 22 Nodo finale: 65
Cerniera iniziale: No Cerniera finale: No
Sovraresistenza: 0% Sisma Z: No

Caratteristiche della sezione

Sezione	Rotazione	Area	Jx	Jy	ix	iy	Wx	Wy	Wplx	Wply
HEA180	0	45.3	2512.55	924.65	7.45	4.52	293.87	102.74	325.17	156.53

Verifiche di resistenza

Verifiche a forza assiale §4.2.4.1.2.1 - §4.2.4.1.2.2 NTC18

X	Comb.	Sfruttamento	Classe	NEd	Nc,Rd	Nt,Rd	Riduzione da taglio	ρx	ρy	Verifica
0	SLU 132	0.226	1	-26813.4	118634.3		1	0	0	Si

Verifiche a forza assiale SLD §4.2.4.1.2.1 - §4.2.4.1.2.2 NTC18

X	Comb.	Sfruttamento	Classe	NEd	Nc,Rd	Nt,Rd	Riduzione da taglio	ρx	ρy	Verifica
0	SLD 12	0.16	1	-18931.6	118634.3		1	0	0	Si

Verifica a taglio X §4.2.4.1.2.4 NTC18

X	Comb.	Sfruttamento	VEd	Vc,Rd	Av	Interazione taglio-torsione	Riduzione torsione	Verifica
58	SLV 9	0.002	120.4	54066.9	36.18	Considerata	0.99	Si

Verifica a taglio X SLD §4.2.4.1.2.4 NTC18

X	Comb.	Sfruttamento	VEd	Vc,Rd	Av	Interazione taglio-torsione	Riduzione torsione	Verifica
0	SLD 9	0.001	46.5	54458	36.18	Considerata	1	Si

Verifica a taglio Y §4.2.4.1.2.4 NTC18

X	Comb.	Sfruttamento	VEd	Vc,Rd	Av	Interazione taglio-torsione	Riduzione torsione	Verifica
108.7	SLU 131	0.089	-1948	21950.9	14.52	Considerata	1	Si

Verifica a taglio Y SLD §4.2.4.1.2.4 NTC18

X	Comb.	Sfruttamento	VEd	Vc,Rd	Av	Interazione taglio-torsione	Riduzione torsione	Verifica
108.7	SLD 1	0.071	-1545.4	21919.6	14.52	Considerata	1	Si

Verifica a torsione §4.2.4.1.2.5 NTC18

X	Comb.	Sfruttamento torsione	TEd	TRd	Riduzione taglio resistente	Sfruttamento taglio-torsione	τEd,totale	τRd	Verifica
108.7	SLV 10	0.029	-523.7	18118.1	Considerata				Si

Verifica a torsione SLD §4.2.4.1.2.5 NTC18

X	Comb.	Sfruttamento torsione	TEd	TRd	Riduzione taglio resistente	Sfruttamento taglio-torsione	τEd,totale	τRd	Verifica
108.7	SLD 10	0.011	-202.5	18118.1	Considerata				Si

Verifica a presso/tenso flessione retta X §§ 4.2.4.1.2.3 - 4.2.4.1.2.6 - 4.2.4.1.2.7 - 4.2.4.1.2.8 NTC18

Verifiche eseguite utilizzando la formula conservativa (6.2) §6.2.1 EN 1993-1-1:2005.

X	Comb.	Sfruttamento	Classe	NEd	NRd	Rid. NRd da VEd	Mx,Ed	Mx,Rd	Rid. Mx,Rd da VEd	Rid. Mx,Rd da NEd	ρx	ρy	Verifica
25.4	SLU 99	0.238	1	-25051.5	118634.3	1	-22475	851642	1		0	0	Si

Verifica a presso/tenso flessione retta X SLD §§ 4.2.4.1.2.3 - 4.2.4.1.2.6 - 4.2.4.1.2.7 - 4.2.4.1.2.8 NTC18

Verifiche eseguite utilizzando la formula conservativa (6.2) §6.2.1 EN 1993-1-1:2005.

X	Comb.	Sfruttamento	Classe	NEd	NRd	Rid. NRd da VEd	Mx,Ed	Mx,Rd	Rid. Mx,Rd da VEd	Rid. Mx,Rd da NEd	ρx	ρy	Verifica
10.9	SLD 16	0.166	1	-18346.2	118634.3	1	-9899	851642	1		0	0	Si

Verifica a presso/tenso flessione retta Y §§ 4.2.4.1.2.3 - 4.2.4.1.2.6 - 4.2.4.1.2.7 - 4.2.4.1.2.8 NTC18

Verifiche eseguite utilizzando la formula conservativa (6.2) §6.2.1 EN 1993-1-1:2005.

X	Comb.	Sfruttamento	Classe	NEd	NRd	Rid. NRd da VEd	My,Ed	My,Rd	Rid. My,Rd da VEd	Rid. My,Rd da NEd	ρx	ρy	Verifica
0	SLV 12	0.162	1	-19074.4	118634.3	1	464	409967	1		0	0	Si

Verifica a presso/tenso flessione retta Y SLD §§ 4.2.4.1.2.3 - 4.2.4.1.2.6 - 4.2.4.1.2.7 - 4.2.4.1.2.8 NTC18

Verifiche eseguite utilizzando la formula conservativa (6.2) §6.2.1 EN 1993-1-1:2005.

X	Comb.	Sfruttamento	Classe	NEd	NRd	Rid. NRd da VEd	My,Ed	My,Rd	Rid. My,Rd da VEd	Rid. My,Rd da NEd	ρx	ρy	Verifica
0	SLD 11	0.16	1	-18931.6	118634.3	1	174	409967	1		0	0	Si

Verifica a presso/tenso flessione deviata §§ 4.2.4.1.2.3 - 4.2.4.1.2.6 - 4.2.4.1.2.7 - 4.2.4.1.2.8 NTC18

Verifiche eseguite utilizzando la formula conservativa (6.2) §6.2.1 EN 1993-1-1:2005.

X	Comb.	Sfruttamento	Classe	NEd	NRd	Rid. NRd da VEd	Mx,Ed	Mx,Rd	My,Ed	My,Rd	Rid. Mx,Rd da VEd	Rid. Mx,Rd da NEd	Rid. My,Rd da VEd	Rid. My,Rd da NEd	α	β	ρx	ρy	Verifica
58	SLU 99	0.22	1	-22786.2	118634.3	1	-23487	851642	107	409967	1		1				0	0	Si

Verifica a presso/tenso flessione deviata SLD §§ 4.2.4.1.2.3 - 4.2.4.1.2.6 - 4.2.4.1.2.7 - 4.2.4.1.2.8 NTC18

Verifiche eseguite utilizzando la formula conservativa (6.2) §6.2.1 EN 1993-1-1:2005.

X	Comb.	Sfruttamento	Classe	NEd	NRd	Rid. NRd da VEd	Mx,Ed	Mx,Rd	My,Ed	My,Rd	Rid. Mx,Rd da VEd	Rid. Mx,Rd da NEd	Rid. My,Rd da VEd	Rid. My,Rd da NEd	α	β	ρx	ρy	Verifica
32.6	SLD 11	0.172	1	-17189.1	118634.3	1	-20403	851642	-1254	409967	1		1				0	0	Si

Verifiche ad instabilità

Caratteristiche iniziali

Membratura principale per controllo snellezza; Calcolo di snellezze ed N critici condotti secondo gli assi principali;
Curva X: b; Curva Y: c; Svergolamento: Carico all'estradosso; Curva svergolamento: b;

Dati per instabilità attorno a x

Numero rit.	Presente	Ascissa	Campata	βx/m	Vincolo a entrambi estremi	λx/m	λVer
1	Si	0					
			1-2	1	Si	14.6	Si, (<200)
2	Si	108.7					

Dati per instabilità attorno a y

Numero rit.	Presente	Ascissa	Campata	βy/n	k,LT	kw,LT	Vincolo a entrambi estremi	λy/n	λVer
1	Si	0							
			1-2	1	1	1	Si	24	Si, (<200)
2	Si	108.7							

Verifica di stabilità per pressoflessione §C.4.2.4.1.3.3.2 NTC18

X	Comb.	Sfruttamento	Classe	NEd	NRk	Mx,Ed max	Mx,Rk	My,Ed max	My,Rk	χ,x	χ,y	kxx	kxy	kyx	kyy	χ,LT	Verifica
0	SLU 132	0.274	1	-26813.4	124566	37317.9	894223.7	203	430465.2	1	0.961	0.63	0.352	0.877	0.586	1	Si

Verifica di stabilità per pressoflessione SLD §C.4.2.4.1.3.3.2 NTC18

X	Comb.	Sfruttamento	Classe	NEd	NRk	Mx,Ed max	Mx,Rk	My,Ed max	My,Rk	χ,x	χ,y	kxx	kxy	kyx	kyy	χ,LT	Verifica
0	SLD 7	0.203	1	-18892.1	124566	29430.1	894223.7	4591	430465.2	1	0.961	0.608	0.348	0.877	0.58	1	Si

Verifica di stabilità a taglio anima Y §4.2.4.1.2.4 [4.2.27] NTC18

η	hw	tw	hw/tw max	Verifica
1.2	15.2	0.6	55.46	Si

Verifica di stabilità a taglio anima Y SLD §4.2.4.1.2.4 [4.2.27] NTC18

η	hw	tw	hw/tw max	Verifica
1.2	15.2	0.6	55.46	Si

Verifiche a deformabilità

Mensola X: No; Mensola Y: No.

Frecce lungo X

Ascissa freccia	Combinazione	Freccia	Luce	L/f	L/f,min	Tipo	Verifica
61.6	SLE RA 1	0	108.7	10000	250	Totale	Si
61.6	SLE RA 31	0	108.7	10000	250	Totale	Si
61.6	SLE RA 30	0	108.7	10000	250	Totale	Si
61.6	SLE RA 29	0	108.7	10000	250	Totale	Si
61.6	SLE RA 28	0	108.7	10000	250	Totale	Si
61.6	SLE RA 2	0	108.7	10000	350	Variabile	Si
61.6	SLE RA 31	0	108.7	10000	350	Variabile	Si
61.6	SLE RA 30	0	108.7	10000	350	Variabile	Si
61.6	SLE RA 29	0	108.7	10000	350	Variabile	Si
61.6	SLE RA 28	0	108.7	10000	350	Variabile	Si

Frecce lungo Y

Ascissa freccia	Combinazione	Freccia	Luce	L/f	L/f,min	Tipo	Verifica
50.7	SLE RA 1	-0.008	108.7	10000	250	Totale	Si
50.7	SLE RA 31	-0.008	108.7	10000	250	Totale	Si
50.7	SLE RA 30	-0.008	108.7	10000	250	Totale	Si
50.7	SLE RA 29	-0.008	108.7	10000	250	Totale	Si
50.7	SLE RA 28	-0.008	108.7	10000	250	Totale	Si
61.6	SLE RA 2	0	108.7	10000	350	Variabile	Si
61.6	SLE RA 31	0	108.7	10000	350	Variabile	Si
61.6	SLE RA 30	0	108.7	10000	350	Variabile	Si
61.6	SLE RA 29	0	108.7	10000	350	Variabile	Si
61.6	SLE RA 28	0	108.7	10000	350	Variabile	Si

Superelemento in acciaio composto dall'asta 152

Caratteristiche del materiale

Acciaio: S275, fyk = 2750

Caratteristiche geometriche

Lunghezza: 108.7
Nodo iniziale: 23 Nodo finale: 68
Cerniera iniziale: No Cerniera finale: No
Sovraresistenza: 0% Sisma Z: No

Caratteristiche della sezione

Sezione	Rotazione	Area	Jx	Jy	ix	iy	Wx	Wy	Wplx	Wply
HEA180	0	45.3	2512.55	924.65	7.45	4.52	293.87	102.74	325.17	156.53

Verifiche di resistenza

Verifiche a forza assiale §4.2.4.1.2.1 - §4.2.4.1.2.2 NTC18

X	Comb.	Sfruttamento	Classe	NEd	Nc,Rd	Nt,Rd	Riduzione da taglio	ρx	ρy	Verifica
0	SLU 99	0.226	1	-26784.2	118634.3		1	0	0	Si

Verifiche a forza assiale SLD §4.2.4.1.2.1 - §4.2.4.1.2.2 NTC18

X	Comb.	Sfruttamento	Classe	NEd	Nc,Rd	Nt,Rd	Riduzione da taglio	ρx	ρy	Verifica
0	SLD 8	0.16	1	-18931.6	118634.3		1	0	0	Si

Verifica a taglio X §4.2.4.1.2.4 NTC18

X	Comb.	Sfruttamento	VEd	Vc,Rd	Av	Interazione taglio-torsione	Riduzione torsione	Verifica
108.7	SLV 6	0.002	-120.4	54066.9	36.18	Considerata	0.99	Si

Verifica a taglio X SLD §4.2.4.1.2.4 NTC18

X	Comb.	Sfruttamento	VEd	Vc,Rd	Av	Interazione taglio-torsione	Riduzione torsione	Verifica
0	SLD 5	0.001	-46.5	54458	36.18	Considerata	1	Si

Verifica a taglio Y §4.2.4.1.2.4 NTC18

X	Comb.	Sfruttamento	VEd	Vc,Rd	Av	Interazione taglio-torsione	Riduzione torsione	Verifica
108.7	SLU 131	0.089	-1948.7	21950.9	14.52	Considerata	1	Si

Verifica a taglio Y SLD §4.2.4.1.2.4 NTC18

X	Comb.	Sfruttamento	VEd	Vc,Rd	Av	Interazione taglio-torsione	Riduzione torsione	Verifica
108.7	SLD 13	0.071	-1545.4	21919.6	14.52	Considerata	1	Si

Verifica a torsione §4.2.4.1.2.5 NTC18

X	Comb.	Sfruttamento torsione	TEd	TRd	Riduzione taglio resistente	Sfruttamento taglio-torsione	τEd,totale	τRd	Verifica
58	SLV 5	0.029	523.7	18118.1	Considerata				Si

Verifica a torsione SLD §4.2.4.1.2.5 NTC18

X	Comb.	Sfruttamento torsione	TEd	TRd	Riduzione taglio resistente	Sfruttamento taglio-torsione	τEd,totale	τRd	Verifica
58	SLD 5	0.011	202.5	18118.1	Considerata				Si

Verifica a presso/tenso flessione retta X §§ 4.2.4.1.2.3 - 4.2.4.1.2.6 - 4.2.4.1.2.7 - 4.2.4.1.2.8 NTC18

Verifiche eseguite utilizzando la formula conservativa (6.2) §6.2.1 EN 1993-1-1:2005.

X	Comb.	Sfruttamento	Classe	NEd	NRd	Rid. NRd da VEd	Mx,Ed	Mx,Rd	Rid. Mx,Rd da VEd	Rid. Mx,Rd da NEd	ρx	ρy	Verifica
25.4	SLU 132	0.237	1	-25022.3	118634.3	1	-22458	851642	1		0	0	Si

Verifica a presso/tenso flessione retta X SLD §§ 4.2.4.1.2.3 - 4.2.4.1.2.6 - 4.2.4.1.2.7 - 4.2.4.1.2.8 NTC18

Verifiche eseguite utilizzando la formula conservativa (6.2) §6.2.1 EN 1993-1-1:2005.

X	Comb.	Sfruttamento	Classe	NEd	NRd	Rid. NRd da VEd	Mx,Ed	Mx,Rd	Rid. Mx,Rd da VEd	Rid. Mx,Rd da NEd	ρx	ρy	Verifica
10.9	SLD 3	0.166	1	-18346.2	118634.3	1	-9899	851642	1		0	0	Si

Verifica a presso/tenso flessione retta Y §§ 4.2.4.1.2.3 - 4.2.4.1.2.6 - 4.2.4.1.2.7 - 4.2.4.1.2.8 NTC18

Verifiche eseguite utilizzando la formula conservativa (6.2) §6.2.1 EN 1993-1-1:2005.

X	Comb.	Sfruttamento	Classe	NEd	NRd	Rid. NRd da VEd	My,Ed	My,Rd	Rid. My,Rd da VEd	Rid. My,Rd da NEd	ρx	ρy	Verifica
0	SLV 7	0.162	1	-19074.4	118634.3	1	-464	409967	1		0	0	Si

Verifica a presso/tenso flessione retta Y SLD §§ 4.2.4.1.2.3 - 4.2.4.1.2.6 - 4.2.4.1.2.7 - 4.2.4.1.2.8 NTC18

Verifiche eseguite utilizzando la formula conservativa (6.2) §6.2.1 EN 1993-1-1:2005.

X	Comb.	Sfruttamento	Classe	NEd	NRd	Rid. NRd da VEd	My,Ed	My,Rd	Rid. My,Rd da VEd	Rid. My,Rd da NEd	ρx	ρy	Verifica
0	SLD 7	0.16	1	-18931.6	118634.3	1	-174	409967	1		0	0	Si

Verifica a presso/tenso flessione deviata §§ 4.2.4.1.2.3 - 4.2.4.1.2.6 - 4.2.4.1.2.7 - 4.2.4.1.2.8 NTC18

Verifiche eseguite utilizzando la formula conservativa (6.2) §6.2.1 EN 1993-1-1:2005.

X	Comb.	Sfruttamento	Classe	NEd	NRd	Rid. NRd da VEd	Mx,Ed	Mx,Rd	My,Ed	My,Rd	Rid. Mx,Rd da VEd	Rid. Mx,Rd da NEd	Rid. My,Rd da VEd	Rid. My,Rd da NEd	α	β	ρx	ρy	Verifica
58	SLU 99	0.22	1	-22756.9	118634.3	1	-23447	851642	-106	409967	1		1				0	0	Si

Verifica a presso/tenso flessione deviata SLD §§ 4.2.4.1.2.3 - 4.2.4.1.2.6 - 4.2.4.1.2.7 - 4.2.4.1.2.8 NTC18

Verifiche eseguite utilizzando la formula conservativa (6.2) §6.2.1 EN 1993-1-1:2005.

X	Comb.	Sfruttamento	Classe	NEd	NRd	Rid. NRd da VEd	Mx,Ed	Mx,Rd	My,Ed	My,Rd	Rid. Mx,Rd da VEd	Rid. Mx,Rd da NEd	Rid. My,Rd da VEd	Rid. My,Rd da NEd	α	β	ρx	ρy	Verifica
32.6	SLD 7	0.172	1	-17189.1	118634.3	1	-20403	851642	1254	409967	1		1				0	0	Si

Verifiche ad instabilità

Caratteristiche iniziali

Membratura principale per controllo snellezza; Calcolo di snellezze ed N critici condotti secondo gli assi principali;
Curva X: b; Curva Y: c; Svergolamento: Carico all'estradosso; Curva svergolamento: b;

Dati per instabilità attorno a x

Numero rit.	Presente	Ascissa	Campata	βx/m	Vincolo a entrambi estremi	λx/m	λVer
1	Si	0					
			1-2	1	Si	14.6	Si, (<200)
2	Si	108.7					

Dati per instabilità attorno a y

Numero rit.	Presente	Ascissa	Campata	βy/n	k,LT	kw,LT	Vincolo a entrambi estremi	λy/n	λVer
1	Si	0							
			1-2	1	1	1	Si	24	Si, (<200)
2	Si	108.7							

Verifica di stabilità per pressoflessione §C.4.2.4.1.3.3.2 NTC18

X	Comb.	Sfruttamento	Classe	NEd	NRk	Mx,Ed max	Mx,Rk	My,Ed max	My,Rk	χ,x	χ,y	kxx	kxy	kyx	kyy	χ,LT	Verifica
0	SLU 132	0.274	1	-26784.2	124566	37392.4	894223.7	202.7	430465.2	1	0.961	0.628	0.352	0.877	0.586	1	Si

Verifica di stabilità per pressoflessione SLD §C.4.2.4.1.3.3.2 NTC18

X	Comb.	Sfruttamento	Classe	NEd	NRk	Mx,Ed max	Mx,Rk	My,Ed max	My,Rk	χ,x	χ,y	kxx	kxy	kyx	kyy	χ,LT	Verifica
0	SLD 11	0.203	1	-18892.1	124566	29430.1	894223.7	4591	430465.2	1	0.961	0.608	0.348	0.877	0.58	1	Si

Verifica di stabilità a taglio anima Y §4.2.4.1.2.4 [4.2.27] NTC18

η	hw	tw	hw/tw max	Verifica
1.2	15.2	0.6	55.46	Si

Verifica di stabilità a taglio anima Y SLD §4.2.4.1.2.4 [4.2.27] NTC18

η	hw	tw	hw/tw max	Verifica
1.2	15.2	0.6	55.46	Si

Verifiche a deformabilità

Mensola X: No; Mensola Y: No.

Frecce lungo X

Ascissa freccia	Combinazione	Freccia	Luce	L/f	L/f,min	Tipo	Verifica
61.6	SLE RA 1	0	108.7	10000	250	Totale	Si
61.6	SLE RA 31	0	108.7	10000	250	Totale	Si
61.6	SLE RA 30	0	108.7	10000	250	Totale	Si
61.6	SLE RA 29	0	108.7	10000	250	Totale	Si
61.6	SLE RA 28	0	108.7	10000	250	Totale	Si
61.6	SLE RA 2	0	108.7	10000	350	Variabile	Si
61.6	SLE RA 31	0	108.7	10000	350	Variabile	Si
61.6	SLE RA 30	0	108.7	10000	350	Variabile	Si
61.6	SLE RA 29	0	108.7	10000	350	Variabile	Si
61.6	SLE RA 28	0	108.7	10000	350	Variabile	Si

Frecce lungo Y

Ascissa freccia	Combinazione	Freccia	Luce	L/f	L/f,min	Tipo	Verifica
50.7	SLE RA 1	-0.008	108.7	10000	250	Totale	Si
50.7	SLE RA 31	-0.008	108.7	10000	250	Totale	Si
50.7	SLE RA 30	-0.008	108.7	10000	250	Totale	Si
50.7	SLE RA 29	-0.008	108.7	10000	250	Totale	Si
50.7	SLE RA 28	-0.008	108.7	10000	250	Totale	Si
61.6	SLE RA 2	0	108.7	10000	350	Variabile	Si
61.6	SLE RA 31	0	108.7	10000	350	Variabile	Si
61.6	SLE RA 30	0	108.7	10000	350	Variabile	Si
61.6	SLE RA 29	0	108.7	10000	350	Variabile	Si
61.6	SLE RA 28	0	108.7	10000	350	Variabile	Si

Superelemento in acciaio composto dall'asta 153

Caratteristiche del materiale

Acciaio: S275, fyk = 2750

Caratteristiche geometriche

Lunghezza: 74.7
Nodo iniziale: 65 Nodo finale: 89
Cerniera iniziale: No Cerniera finale: No
Sovraresistenza: 0% Sisma Z: No

Caratteristiche della sezione

Sezione	Rotazione	Area	Jx	Jy	ix	iy	Wx	Wy	Wplx	Wply
HEA180	0	45.3	2512.55	924.65	7.45	4.52	293.87	102.74	325.17	156.53

Verifiche di resistenza

Verifiche a forza assiale §4.2.4.1.2.1 - §4.2.4.1.2.2 NTC18

X	Comb.	Sfruttamento	Classe	NEd	Nc,Rd	Nt,Rd	Riduzione da taglio	ρx	ρy	Verifica
0	SLU 131	0.218	1	-25807.6	118634.3		1	0	0	Si

Verifiche a forza assiale SLD §4.2.4.1.2.1 - §4.2.4.1.2.2 NTC18

X	Comb.	Sfruttamento	Classe	NEd	Nc,Rd	Nt,Rd	Riduzione da taglio	ρx	ρy	Verifica
0	SLD 1	0.155	1	-18338.6	118634.3		1	0	0	Si

Verifica a taglio X §4.2.4.1.2.4 NTC18

X	Comb.	Sfruttamento	VEd	Vc,Rd	Av	Interazione taglio-torsione	Riduzione torsione	Verifica
74.7	SLV 10	0.004	-204.2	49094.2	36.18	Considerata	0.9	Si

Verifica a taglio X SLD §4.2.4.1.2.4 NTC18

X	Comb.	Sfruttamento	VEd	Vc,Rd	Av	Interazione taglio-torsione	Riduzione torsione	Verifica
0	SLD 9	0.002	-80.1	52610.9	36.18	Considerata	0.96	Si

Verifica a taglio Y §4.2.4.1.2.4 NTC18

X	Comb.	Sfruttamento	VEd	Vc,Rd	Av	Interazione taglio-torsione	Riduzione torsione	Verifica
74.7	SLU 99	0.186	-4075.1	21917.7	14.52	Considerata	1	Si

Verifica a taglio Y SLD §4.2.4.1.2.4 NTC18

X	Comb.	Sfruttamento	VEd	Vc,Rd	Av	Interazione taglio-torsione	Riduzione torsione	Verifica
74.7	SLD 2	0.15	-3263.8	21686.7	14.52	Considerata	0.99	Si

Verifica a torsione §4.2.4.1.2.5 NTC18

X	Comb.	Sfruttamento torsione	TEd	TRd	Riduzione taglio resistente	Sfruttamento taglio-torsione	τEd,totale	τRd	Verifica
74.7	SLV 9	0.243	4406.2	18118.1	Considerata				Si

Verifica a torsione SLD §4.2.4.1.2.5 NTC18

X	Comb.	Sfruttamento torsione	TEd	TRd	Riduzione taglio resistente	Sfruttamento taglio-torsione	τEd,totale	τRd	Verifica
74.7	SLD 10	0.094	1699.3	18118.1	Considerata				Si

Verifica a presso/tenso flessione retta X §§ 4.2.4.1.2.3 - 4.2.4.1.2.6 - 4.2.4.1.2.7 - 4.2.4.1.2.8 NTC18

Verifiche eseguite utilizzando la formula conservativa (6.2) §6.2.1 EN 1993-1-1:2005.

X	Comb.	Sfruttamento	Classe	NEd	NRd	Rid. NRd da VEd	Mx,Ed	Mx,Rd	Rid. Mx,Rd da VEd	Rid. Mx,Rd da NEd	ρx	ρy	Verifica
59.8	SLV 4	0.317	1	-17009.7	118634.3	1	147537	851642	1		0	0	Si

Verifica a presso/tenso flessione retta X SLD §§ 4.2.4.1.2.3 - 4.2.4.1.2.6 - 4.2.4.1.2.7 - 4.2.4.1.2.8 NTC18

Verifiche eseguite utilizzando la formula conservativa (6.2) §6.2.1 EN 1993-1-1:2005.

X	Comb.	Sfruttamento	Classe	NEd	NRd	Rid. NRd da VEd	Mx,Ed	Mx,Rd	Rid. Mx,Rd da VEd	Rid. Mx,Rd da NEd	ρx	ρy	Verifica
67.2	SLD 4	0.29	1	-15724.5	118634.3	1	134013	851642	1		0	0	Si

Verifica a presso/tenso flessione retta Y §§ 4.2.4.1.2.3 - 4.2.4.1.2.6 - 4.2.4.1.2.7 - 4.2.4.1.2.8 NTC18

Verifiche eseguite utilizzando la formula conservativa (6.2) §6.2.1 EN 1993-1-1:2005.

X	Comb.	Sfruttamento	Classe	NEd	NRd	Rid. NRd da VEd	My,Ed	My,Rd	Rid. My,Rd da VEd	Rid. My,Rd da NEd	ρx	ρy	Verifica
19.9	SLV 13	0.131	1	-14956.5	118634.3	1	2213	409967	1		0	0	Si

Verifica a presso/tenso flessione deviata §§ 4.2.4.1.2.3 - 4.2.4.1.2.6 - 4.2.4.1.2.7 - 4.2.4.1.2.8 NTC18

Verifiche eseguite utilizzando la formula conservativa (6.2) §6.2.1 EN 1993-1-1:2005.

X	Comb.	Sfruttamento	Classe	NEd	NRd	Rid. NRd da VEd	Mx,Ed	Mx,Rd	My,Ed	My,Rd	Rid. Mx,Rd da VEd	Rid. Mx,Rd da NEd	Rid. My,Rd da VEd	Rid. My,Rd da NEd	α	β	ρx	ρy	Verifica
74.7	SLU 132	0.404	1	-22032.1	118634.3	1	185192	851642	-295	409967	1		1				0	0	Si

Verifica a presso/tenso flessione deviata SLD §§ 4.2.4.1.2.3 - 4.2.4.1.2.6 - 4.2.4.1.2.7 - 4.2.4.1.2.8 NTC18

Verifiche eseguite utilizzando la formula conservativa (6.2) §6.2.1 EN 1993-1-1:2005.

X	Comb.	Sfruttamento	Classe	NEd	NRd	Rid. NRd da VEd	Mx,Ed	Mx,Rd	My,Ed	My,Rd	Rid. Mx,Rd da VEd	Rid. Mx,Rd da NEd	Rid. My,Rd da VEd	Rid. My,Rd da NEd	α	β	ρx	ρy	Verifica
74.7	SLD 1	0.316	1	-15434.3	118634.3	1	157163	851642	-622	409967	1		1				0	0	Si

Verifiche ad instabilità

Caratteristiche iniziali

Membratura principale per controllo snellezza; Calcolo di snellezze ed N critici condotti secondo gli assi principali;
Curva X: b; Curva Y: c; Svergolamento: Carico all'estradosso; Curva svergolamento: b;

Dati per instabilità attorno a x

Numero rit.	Presente	Ascissa	Campata	βx/m	Vincolo a entrambi estremi	λx/m	λVer
1	Si	0					
			1-2	1	Si	10	Si, (<200)
2	Si	74.7					

Dati per instabilità attorno a y

Numero rit.	Presente	Ascissa	Campata	βy/n	k,LT	kw,LT	Vincolo a entrambi estremi	λy/n	λVer
1	Si	0							
			1-2	1	1	1	Si	16.5	Si, (<200)

Numero rit.	Presente	Ascissa	Campata	βy/n	k,LT	kw,LT	Vincolo a entrambi estremi	λy/n	λVer
2	Si	74.7							

Verifica di stabilità per pressoflessione §C.4.2.4.1.3.3.2 NTC18

X	Comb.	Sfruttamento	Classe	NEd	NRk	Mx,Ed max	Mx,Rk	My,Ed max	My,Rk	χ,x	χ,y	kxx	kxy	kyx	kyy	χ,LT	Verifica
0	SLU 99	0.39	1	-25807.6	124566	185192.2	894223.7	294.8	430465.2	1	1	0.502	0.229	0.79	0.381	1	Si

Verifica di stabilità per pressoflessione SLD §C.4.2.4.1.3.3.2 NTC18

X	Comb.	Sfruttamento	Classe	NEd	NRk	Mx,Ed max	Mx,Rk	My,Ed max	My,Rk	χ,x	χ,y	kxx	kxy	kyx	kyy	χ,LT	Verifica
0	SLD 4	0.302	1	-18338.3	124566	157194.3	894223.7	1150.3	430465.2	1	1	0.526	0.302	0.79	0.504	1	Si

Verifica di stabilità a taglio anima Y §4.2.4.1.2.4 [4.2.27] NTC18

η	hw	tw	hw/tw max	Verifica
1.2	15.2	0.6	55.46	Si

Verifica di stabilità a taglio anima Y SLD §4.2.4.1.2.4 [4.2.27] NTC18

η	hw	tw	hw/tw max	Verifica
1.2	15.2	0.6	55.46	Si

Verifiche a deformabilità

Mensola X: No; Mensola Y: No.

Frecce lungo X

Ascissa freccia	Combinazione	Freccia	Luce	L/f	L/f,min	Tipo	Verifica
52.3	SLE RA 1	0	74.7	10000	250	Totale	Si
52.3	SLE RA 31	0	74.7	10000	250	Totale	Si
52.3	SLE RA 30	0	74.7	10000	250	Totale	Si
52.3	SLE RA 29	0	74.7	10000	250	Totale	Si
52.3	SLE RA 28	0	74.7	10000	250	Totale	Si
47.3	SLE RA 2	0	74.7	10000	350	Variabile	Si
49.8	SLE RA 31	0	74.7	10000	350	Variabile	Si
49.8	SLE RA 30	0	74.7	10000	350	Variabile	Si
49.8	SLE RA 29	0	74.7	10000	350	Variabile	Si
49.8	SLE RA 28	0	74.7	10000	350	Variabile	Si

Frecce lungo Y

Ascissa freccia	Combinazione	Freccia	Luce	L/f	L/f,min	Tipo	Verifica
49.8	SLE RA 1	0.003	74.7	10000	250	Totale	Si
47.3	SLE RA 31	0.004	74.7	10000	250	Totale	Si
47.3	SLE RA 30	0.004	74.7	10000	250	Totale	Si
47.3	SLE RA 29	0.004	74.7	10000	250	Totale	Si
47.3	SLE RA 28	0.004	74.7	10000	250	Totale	Si
57.3	SLE RA 2	0	74.7	10000	350	Variabile	Si
42.3	SLE RA 31	0.001	74.7	10000	350	Variabile	Si
42.3	SLE RA 30	0.001	74.7	10000	350	Variabile	Si
42.3	SLE RA 29	0.001	74.7	10000	350	Variabile	Si
42.3	SLE RA 28	0.001	74.7	10000	350	Variabile	Si

Superelemento in acciaio composto dall'asta 154

Caratteristiche del materiale

Acciaio: S275, fyk = 2750

Caratteristiche geometriche

Lunghezza: 74.7
Nodo iniziale: 68 Nodo finale: 90
Cerniera iniziale: No Cerniera finale: No
Sovraresistenza: 0% Sisma Z: No

Caratteristiche della sezione

Sezione	Rotazione	Area	Jx	Jy	ix	iy	Wx	Wy	Wplx	Wply
HEA180	0	45.3	2512.55	924.65	7.45	4.52	293.87	102.74	325.17	156.53

Verifiche di resistenza

Verifiche a forza assiale §4.2.4.1.2.1 - §4.2.4.1.2.2 NTC18

X	Comb.	Sfruttamento	Classe	NEd	Nc,Rd	Nt,Rd	Riduzione da taglio	ρx	ρy	Verifica
0	SLU 131	0.217	1	-25802.9	118634.3		1	0	0	Si

Verifiche a forza assiale SLD §4.2.4.1.2.1 - §4.2.4.1.2.2 NTC18

X	Comb.	Sfruttamento	Classe	NEd	Nc,Rd	Nt,Rd	Riduzione da taglio	ρx	ρy	Verifica
0	SLD 14	0.155	1	-18338.6	118634.3		1	0	0	Si

Verifica a taglio X §4.2.4.1.2.4 NTC18

X	Comb.	Sfruttamento	VEd	Vc,Rd	Av	Interazione taglio-torsione	Riduzione torsione	Verifica
39.8	SLV 5	0.004	204.2	49094.2	36.18	Considerata	0.9	Si

Verifica a taglio X SLD §4.2.4.1.2.4 NTC18

X	Comb.	Sfruttamento	VEd	Vc,Rd	Av	Interazione taglio-torsione	Riduzione torsione	Verifica
0	SLD 5	0.002	80.1	52610.9	36.18	Considerata	0.96	Si

Verifica a taglio Y §4.2.4.1.2.4 NTC18

X	Comb.	Sfruttamento	VEd	Vc,Rd	Av	Interazione taglio-torsione	Riduzione torsione	Verifica
74.7	SLU 132	0.186	-4076.3	21917.7	14.52	Considerata	1	Si

Verifica a taglio Y SLD §4.2.4.1.2.4 NTC18

X	Comb.	Sfruttamento	VEd	Vc,Rd	Av	Interazione taglio-torsione	Riduzione torsione	Verifica
74.7	SLD 14	0.15	-3263.8	21686.7	14.52	Considerata	0.99	Si

Verifica a torsione §4.2.4.1.2.5 NTC18

X	Comb.	Sfruttamento torsione	TEd	TRd	Riduzione taglio resistente	Sfruttamento taglio-torsione	τEd,totale	τRd	Verifica
37.4	SLV 6	0.243	-4406.2	18118.1	Considerata				Si

Verifica a torsione SLD §4.2.4.1.2.5 NTC18

X	Comb.	Sfruttamento torsione	TEd	TRd	Riduzione taglio resistente	Sfruttamento taglio-torsione	τEd,totale	τRd	Verifica
39.8	SLD 5	0.094	-1699.3	18118.1	Considerata				Si

Verifica a presso/tenso flessione retta X §§ 4.2.4.1.2.3 - 4.2.4.1.2.6 - 4.2.4.1.2.7 - 4.2.4.1.2.8 NTC18

Verifiche eseguite utilizzando la formula conservativa (6.2) §6.2.1 EN 1993-1-1:2005.

X	Comb.	Sfruttamento	Classe	NEd	NRd	Rid. NRd da VEd	Mx,Ed	Mx,Rd	Rid. Mx,Rd da VEd	Rid. Mx,Rd da NEd	ρx	ρy	Verifica
59.8	SLV 16	0.317	1	-17009.7	118634.3	1	147537	851642	1		0	0	Si

Verifica a presso/tenso flessione retta X SLD §§ 4.2.4.1.2.3 - 4.2.4.1.2.6 - 4.2.4.1.2.7 - 4.2.4.1.2.8 NTC18

Verifiche eseguite utilizzando la formula conservativa (6.2) §6.2.1 EN 1993-1-1:2005.

X	Comb.	Sfruttamento	Classe	NEd	NRd	Rid. NRd da VEd	Mx,Ed	Mx,Rd	Rid. Mx,Rd da VEd	Rid. Mx,Rd da NEd	ρx	ρy	Verifica
67.2	SLD 16	0.29	1	-15724.5	118634.3	1	134013	851642	1		0	0	Si

Verifica a presso/tenso flessione retta Y §§ 4.2.4.1.2.3 - 4.2.4.1.2.6 - 4.2.4.1.2.7 - 4.2.4.1.2.8 NTC18

Verifiche eseguite utilizzando la formula conservativa (6.2) §6.2.1 EN 1993-1-1:2005.

X	Comb.	Sfruttamento	Classe	NEd	NRd	Rid. NRd da VEd	My,Ed	My,Rd	Rid. My,Rd da VEd	Rid. My,Rd da NEd	ρx	ρy	Verifica
19.9	SLV 1	0.131	1	-14956.5	118634.3	1	-2213	409967	1		0	0	Si

Verifica a presso/tenso flessione deviata §§ 4.2.4.1.2.3 - 4.2.4.1.2.6 - 4.2.4.1.2.7 - 4.2.4.1.2.8 NTC18

Verifiche eseguite utilizzando la formula conservativa (6.2) §6.2.1 EN 1993-1-1:2005.

X	Comb.	Sfruttamento	Classe	NEd	NRd	Rid. NRd da VEd	Mx,Ed	Mx,Rd	My,Ed	My,Rd	Rid. Mx,Rd da VEd	Rid. Mx,Rd da NEd	Rid. My,Rd da VEd	Rid. My,Rd da NEd	α	β	ρx	ρy	Verifica
74.7	SLU 132	0.404	1	-22027.3	118634.3	1	185360	851642	294	409967	1		1				0	0	Si

Verifica a presso/tenso flessione deviata SLD §§ 4.2.4.1.2.3 - 4.2.4.1.2.6 - 4.2.4.1.2.7 - 4.2.4.1.2.8 NTC18

Verifiche eseguite utilizzando la formula conservativa (6.2) §6.2.1 EN 1993-1-1:2005.

X	Comb.	Sfruttamento	Classe	NEd	NRd	Rid. NRd da VEd	Mx,Ed	Mx,Rd	My,Ed	My,Rd	Rid. Mx,Rd da VEd	Rid. Mx,Rd da NEd	Rid. My,Rd da VEd	Rid. My,Rd da NEd	α	β	ρx	ρy	Verifica
74.7	SLD 14	0.316	1	-15434.3	118634.3	1	157163	851642	622	409967	1		1				0	0	Si

Verifiche ad instabilità

Caratteristiche iniziali

Membratura principale per controllo snellezza; Calcolo di snellezze ed N critici condotti secondo gli assi principali;
Curva X: b; Curva Y: c; Svergolamento: Carico all'estradosso; Curva svergolamento: b;

Dati per instabilità attorno a x

Numero rit.	Presente	Ascissa	Campata	βx/m	Vincolo a entrambi estremi	λx/m	λVer
1	Si	0					
			1-2	1	Si	10	Si, (<200)
2	Si	74.7					

Dati per instabilità attorno a y

Numero rit.	Presente	Ascissa	Campata	βy/n	k,LT	kw,LT	Vincolo a entrambi estremi	λy/n	λVer
1	Si	0							
			1-2	1	1	1	Si	16.5	Si, (<200)
2	Si	74.7							

Verifica di stabilità per pressoflessione §C.4.2.4.1.3.3.2 NTC18

X	Comb.	Sfruttamento	Classe	NEd	NRk	Mx,Ed max	Mx,Rk	My,Ed max	My,Rk	χ,x	χ,y	kxx	kxy	kyx	kyy	χ,LT	Verifica
0	SLU 99	0.39	1	-25802.9	124566	185360.3	894223.7	294.4	430465.2	1	1	0.502	0.229	0.79	0.381	1	Si

Verifica di stabilità per pressoflessione SLD §C.4.2.4.1.3.3.2 NTC18

X	Comb.	Sfruttamento	Classe	NEd	NRk	Mx,Ed max	Mx,Rk	My,Ed max	My,Rk	χ,x	χ,y	kxx	kxy	kyx	kyy	χ,LT	Verifica
0	SLD 15	0.302	1	-18338.3	124566	157194.3	894223.7	1150.3	430465.2	1	1	0.526	0.302	0.79	0.504	1	Si

Verifica di stabilità a taglio anima Y §4.2.4.1.2.4 [4.2.27] NTC18

η	hw	tw	hw/tw max	Verifica
1.2	15.2	0.6	55.46	Si

Verifica di stabilità a taglio anima Y SLD §4.2.4.1.2.4 [4.2.27] NTC18

η	hw	tw	hw/tw max	Verifica
1.2	15.2	0.6	55.46	Si

Verifiche a deformabilità

Mensola X: No; Mensola Y: No.

Frecce lungo X

Ascissa freccia	Combinazione	Freccia	Luce	L/f	L/f,min	Tipo	Verifica
52.3	SLE RA 1	0	74.7	10000	250	Totale	Si
52.3	SLE RA 31	0	74.7	10000	250	Totale	Si
52.3	SLE RA 30	0	74.7	10000	250	Totale	Si
52.3	SLE RA 29	0	74.7	10000	250	Totale	Si
52.3	SLE RA 28	0	74.7	10000	250	Totale	Si
47.3	SLE RA 2	0	74.7	10000	350	Variabile	Si
49.8	SLE RA 31	0	74.7	10000	350	Variabile	Si
49.8	SLE RA 30	0	74.7	10000	350	Variabile	Si
49.8	SLE RA 29	0	74.7	10000	350	Variabile	Si
49.8	SLE RA 28	0	74.7	10000	350	Variabile	Si

Frecce lungo Y

Ascissa freccia	Combinazione	Freccia	Luce	L/f	L/f,min	Tipo	Verifica
49.8	SLE RA 1	0.003	74.7	10000	250	Totale	Si
47.3	SLE RA 31	0.004	74.7	10000	250	Totale	Si
47.3	SLE RA 30	0.004	74.7	10000	250	Totale	Si
47.3	SLE RA 29	0.004	74.7	10000	250	Totale	Si
47.3	SLE RA 28	0.004	74.7	10000	250	Totale	Si
57.3	SLE RA 2	0	74.7	10000	350	Variabile	Si
42.3	SLE RA 31	0.001	74.7	10000	350	Variabile	Si
42.3	SLE RA 30	0.001	74.7	10000	350	Variabile	Si
42.3	SLE RA 29	0.001	74.7	10000	350	Variabile	Si
42.3	SLE RA 28	0.001	74.7	10000	350	Variabile	Si

Superelemento in acciaio composto dall'asta 155

Caratteristiche del materiale

Acciaio: S275, fyk = 2750

Caratteristiche geometriche

Lunghezza: 78.5
Nodo iniziale: 89 Nodo finale: 111
Cerniera iniziale: No Cerniera finale: No
Sovraresistenza: 0% Sisma Z: No

Caratteristiche della sezione

Sezione	Rotazione	Area	Jx	Jy	ix	iy	Wx	Wy	Wplx	Wply
HEA180	0	45.3	2512.55	924.65	7.45	4.52	293.87	102.74	325.17	156.53

Verifiche di resistenza

Verifiche a forza assiale §4.2.4.1.2.1 - §4.2.4.1.2.2 NTC18

X	Comb.	Sfruttamento	Classe	NEd	Nc,Rd	Nt,Rd	Riduzione da taglio	ρx	ρy	Verifica
0	SLU 131	0.191	1	-22703.9	118634.3		1	0	0	Si

Verifiche a forza assiale SLD §4.2.4.1.2.1 - §4.2.4.1.2.2 NTC18

X	Comb.	Sfruttamento	Classe	NEd	Nc,Rd	Nt,Rd	Riduzione da taglio	ρx	ρy	Verifica
0	SLD 1	0.133	1	-15816.2	118634.3		1	0	0	Si

Verifica a taglio X §4.2.4.1.2.4 NTC18

X	Comb.	Sfruttamento	VEd	Vc,Rd	Av	Interazione taglio-torsione	Riduzione torsione	Verifica
78.5	SLV 12	0.002	108.8	50002.8	36.18	Considerata	0.91	Si

Verifica a taglio X SLD §4.2.4.1.2.4 NTC18

X	Comb.	Sfruttamento	VEd	Vc,Rd	Av	Interazione taglio-torsione	Riduzione torsione	Verifica
78.5	SLD 12	0.001	43.3	52956.6	36.18	Considerata	0.97	Si

Verifica a taglio Y §4.2.4.1.2.4 NTC18

X	Comb.	Sfruttamento	VEd	Vc,Rd	Av	Interazione taglio-torsione	Riduzione torsione	Verifica
0	SLU 132	0.102	2236.6	21938.4	14.52	Considerata	1	Si

Verifica a taglio Y SLD §4.2.4.1.2.4 NTC18

X	Comb.	Sfruttamento	VEd	Vc,Rd	Av	Interazione taglio-torsione	Riduzione torsione	Verifica
0	SLD 11	0.074	1581.1	21250	14.52	Considerata	0.97	Si

Verifica a torsione §4.2.4.1.2.5 NTC18

X	Comb.	Sfruttamento torsione	TEd	TRd	Riduzione taglio resistente	Sfruttamento taglio-torsione	τEd,totale	τRd	Verifica
75.8	SLV 12	0.206	-3724.7	18118.1	Considerata				Si

Verifica a torsione SLD §4.2.4.1.2.5 NTC18

X	Comb.	Sfruttamento torsione	TEd	TRd	Riduzione taglio resistente	Sfruttamento taglio-torsione	τEd,totale	τRd	Verifica
36.6	SLD 12	0.079	-1423.1	18118.1	Considerata				Si

Verifica a presso/tenso flessione retta X §§ 4.2.4.1.2.3 - 4.2.4.1.2.6 - 4.2.4.1.2.7 - 4.2.4.1.2.8 NTC18

Verifiche eseguite utilizzando la formula conservativa (6.2) §6.2.1 EN 1993-1-1:2005.

X	Comb.	Sfruttamento	Classe	NEd	NRd	Rid. NRd da VEd	Mx,Ed	Mx,Rd	Rid. Mx,Rd da VEd	Rid. Mx,Rd da NEd	ρx	ρy	Verifica
39.2	SLU 99	0.333	1	-22131.2	118634.3	1	124589	851642	1		0	0	Si

Verifica a presso/tenso flessione deviata §§ 4.2.4.1.2.3 - 4.2.4.1.2.6 - 4.2.4.1.2.7 - 4.2.4.1.2.8 NTC18

Verifiche eseguite utilizzando la formula conservativa (6.2) §6.2.1 EN 1993-1-1:2005.

X	Comb.	Sfruttamento	Classe	NEd	NRd	Rid. NRd da VEd	Mx,Ed	Mx,Rd	My,Ed	My,Rd	Rid. Mx,Rd da VEd	Rid. Mx,Rd da NEd	Rid. My,Rd da VEd	Rid. My,Rd da NEd	α	β	ρx	ρy	Verifica
0	SLU 132	0.41	1	-22703.9	118634.3	1	185187	851642	-290	409967	1		1				0	0	Si

Verifica a presso/tenso flessione deviata SLD §§ 4.2.4.1.2.3 - 4.2.4.1.2.6 - 4.2.4.1.2.7 - 4.2.4.1.2.8 NTC18

Verifiche eseguite utilizzando la formula conservativa (6.2) §6.2.1 EN 1993-1-1:2005.

X	Comb.	Sfruttamento	Classe	NEd	NRd	Rid. NRd da VEd	Mx,Ed	Mx,Rd	My,Ed	My,Rd	Rid. Mx,Rd da VEd	Rid. Mx,Rd da NEd	Rid. My,Rd da VEd	Rid. My,Rd da NEd	α	β	ρx	ρy	Verifica
0	SLD 1	0.319	1	-15816.2	118634.3	1	157163	851642	-643	409967	1		1				0	0	Si

Verifiche ad instabilità

Caratteristiche iniziali

Membratura principale per controllo snellezza; Calcolo di snellezze ed N critici condotti secondo gli assi principali;
Curva X: b; Curva Y: c; Svergolamento: Carico all'estradosso; Curva svergolamento: b;

Dati per instabilità attorno a x

Numero rit.	Presente	Ascissa	Campata	βx/m	Vincolo a entrambi estremi	λx/m	λVer
1	Si	0					
			1-2	1	Si	10.5	Si, (<200)
2	Si	78.5					

Dati per instabilità attorno a y

Numero rit.	Presente	Ascissa	Campata	βy/n	k,LT	kw,LT	Vincolo a entrambi estremi	λy/n	λVer
1	Si	0							
			1-2	1	1	1	Si	17.4	Si, (<200)
2	Si	78.5							

Verifica di stabilità per pressoflessione §C.4.2.4.1.3.3.2 NTC18

X	Comb.	Sfruttamento	Classe	NEd	NRk	Mx,Ed max	Mx,Rk	My,Ed max	My,Rk	χ,x	χ,y	kxx	kxy	kyx	kyy	χ,LT	Verifica
0	SLU 99	0.366	1	-22703.9	124566	185186.9	894223.7	290.4	430465.2	1	1	0.727	0.276	0.8	0.459	1	Si

Verifica di stabilità per pressoflessione SLD §C.4.2.4.1.3.3.2 NTC18

X	Comb.	Sfruttamento	Classe	NEd	NRk	Mx,Ed max	Mx,Rk	My,Ed max	My,Rk	χ,x	χ,y	kxx	kxy	kyx	kyy	χ,LT	Verifica
0	SLD 1	0.283	1	-15816.2	124566	157163.5	894223.7	1329.2	430465.2	1	1	0.787	0.463	0.8	0.772	1	Si

Verifica di stabilità a taglio anima Y §4.2.4.1.2.4 [4.2.27] NTC18

η	hw	tw	hw/tw max	Verifica
1.2	15.2	0.6	55.46	Si

Verifica di stabilità a taglio anima Y SLD §4.2.4.1.2.4 [4.2.27] NTC18

η	hw	tw	hw/tw max	Verifica
1.2	15.2	0.6	55.46	Si

Verifiche a deformabilità

Mensola X: No; Mensola Y: No.

Frecce lungo X

Ascissa freccia	Combinazione	Freccia	Luce	L/f	L/f,min	Tipo	Verifica
28.8	SLE RA 1	0	78.5	10000	250	Totale	Si
28.8	SLE RA 31	0	78.5	10000	250	Totale	Si
28.8	SLE RA 30	0	78.5	10000	250	Totale	Si
28.8	SLE RA 29	0	78.5	10000	250	Totale	Si
28.8	SLE RA 28	0	78.5	10000	250	Totale	Si
23.5	SLE RA 2	0	78.5	10000	350	Variabile	Si
28.8	SLE RA 31	0	78.5	10000	350	Variabile	Si
28.8	SLE RA 30	0	78.5	10000	350	Variabile	Si
28.8	SLE RA 29	0	78.5	10000	350	Variabile	Si
28.8	SLE RA 28	0	78.5	10000	350	Variabile	Si

Frecce lungo Y

Ascissa freccia	Combinazione	Freccia	Luce	L/f	L/f,min	Tipo	Verifica
36.6	SLE RA 33	0.012	78.5	6760.9	250	Totale	Si
36.6	SLE RA 32	0.012	78.5	6760.9	250	Totale	Si
36.6	SLE RA 25	0.012	78.5	6809.6	250	Totale	Si
36.6	SLE RA 24	0.012	78.5	6809.6	250	Totale	Si
36.6	SLE RA 21	0.011	78.5	6828	250	Totale	Si
34	SLE RA 2	0	78.5	10000	350	Variabile	Si
36.6	SLE RA 31	0.001	78.5	10000	350	Variabile	Si
36.6	SLE RA 30	0.001	78.5	10000	350	Variabile	Si
36.6	SLE RA 29	0.001	78.5	10000	350	Variabile	Si
36.6	SLE RA 28	0.001	78.5	10000	350	Variabile	Si

Superelemento in acciaio composto dall'asta 156

Caratteristiche del materiale

Acciaio: S275, fyk = 2750

Caratteristiche geometriche

Lunghezza: 78.5
Nodo iniziale: 90 Nodo finale: 112
Cerniera iniziale: No Cerniera finale: No
Sovraresistenza: 0% Sisma Z: No

Caratteristiche della sezione

Sezione	Rotazione	Area	Jx	Jy	ix	iy	Wx	Wy	Wplx	Wply
HEA180	0	45.3	2512.55	924.65	7.45	4.52	293.87	102.74	325.17	156.53

Verifiche di resistenza

Verifiche a forza assiale §4.2.4.1.2.1 - §4.2.4.1.2.2 NTC18

X	Comb.	Sfruttamento	Classe	NEd	Nc,Rd	Nt,Rd	Riduzione da taglio	ρx	ρy	Verifica
0	SLU 98	0.191	1	-22701.7	118634.3		1	0	0	Si

Verifiche a forza assiale SLD §4.2.4.1.2.1 - §4.2.4.1.2.2 NTC18

X	Comb.	Sfruttamento	Classe	NEd	Nc,Rd	Nt,Rd	Riduzione da taglio	ρx	ρy	Verifica
0	SLD 14	0.133	1	-15816.2	118634.3		1	0	0	Si

Verifica a taglio X §4.2.4.1.2.4 NTC18

X	Comb.	Sfruttamento	VEd	Vc,Rd	Av	Interazione taglio-torsione	Riduzione torsione	Verifica
78.5	SLV 8	0.002	-108.8	50002.8	36.18	Considerata	0.91	Si

Verifica a taglio X SLD §4.2.4.1.2.4 NTC18

X	Comb.	Sfruttamento	VEd	Vc,Rd	Av	Interazione taglio-torsione	Riduzione torsione	Verifica
78.5	SLD 8	0.001	-43.3	52956.6	36.18	Considerata	0.97	Si

Verifica a taglio Y §4.2.4.1.2.4 NTC18

X	Comb.	Sfruttamento	VEd	Vc,Rd	Av	Interazione taglio-torsione	Riduzione torsione	Verifica
0	SLU 132	0.102	2231.4	21938.4	14.52	Considerata	1	Si

Verifica a taglio Y SLD §4.2.4.1.2.4 NTC18

X	Comb.	Sfruttamento	VEd	Vc,Rd	Av	Interazione taglio-torsione	Riduzione torsione	Verifica
0	SLD 8	0.074	1581.1	21250	14.52	Considerata	0.97	Si

Verifica a torsione §4.2.4.1.2.5 NTC18

X	Comb.	Sfruttamento torsione	TEd	TRd	Riduzione taglio resistente	Sfruttamento taglio-torsione	τEd,totale	τRd	Verifica
78.5	SLV 8	0.206	3724.7	18118.1	Considerata				Si

Verifica a torsione SLD §4.2.4.1.2.5 NTC18

X	Comb.	Sfruttamento torsione	TEd	TRd	Riduzione taglio resistente	Sfruttamento taglio-torsione	τEd,totale	τRd	Verifica
78.5	SLD 8	0.079	1423.1	18118.1	Considerata				Si

Verifica a presso/tenso flessione retta X §§ 4.2.4.1.2.3 - 4.2.4.1.2.6 - 4.2.4.1.2.7 - 4.2.4.1.2.8 NTC18

Verifiche eseguite utilizzando la formula conservativa (6.2) §6.2.1 EN 1993-1-1:2005.

X	Comb.	Sfruttamento	Classe	NEd	NRd	Rid. NRd da VEd	Mx,Ed	Mx,Rd	Rid. Mx,Rd da VEd	Rid. Mx,Rd da NEd	ρx	ρy	Verifica
39.2	SLU 99	0.333	1	-22129.1	118634.3	1	124959	851642	1		0	0	Si

Verifica a presso/tenso flessione deviata §§ 4.2.4.1.2.3 - 4.2.4.1.2.6 - 4.2.4.1.2.7 - 4.2.4.1.2.8 NTC18

Verifiche eseguite utilizzando la formula conservativa (6.2) §6.2.1 EN 1993-1-1:2005.

X	Comb.	Sfruttamento	Classe	NEd	NRd	Rid. NRd da VEd	Mx,Ed	Mx,Rd	My,Ed	My,Rd	Rid. Mx,Rd da VEd	Rid. Mx,Rd da NEd	Rid. My,Rd da VEd	Rid. My,Rd da NEd	α	β	ρx	ρy	Verifica
0	SLU 132	0.41	1	-22701.7	118634.3	1	185355	851642	290	409967	1		1				0	0	Si

Verifica a presso/tenso flessione deviata SLD §§ 4.2.4.1.2.3 - 4.2.4.1.2.6 - 4.2.4.1.2.7 - 4.2.4.1.2.8 NTC18

Verifiche eseguite utilizzando la formula conservativa (6.2) §6.2.1 EN 1993-1-1:2005.

X	Comb.	Sfruttamento	Classe	NEd	NRd	Rid. NRd da VEd	Mx,Ed	Mx,Rd	My,Ed	My,Rd	Rid. Mx,Rd da VEd	Rid. Mx,Rd da NEd	Rid. My,Rd da VEd	Rid. My,Rd da NEd	α	β	ρx	ρy	Verifica
0	SLD 14	0.319	1	-15816.2	118634.3	1	157163	851642	643	409967	1		1				0	0	Si

Verifiche ad instabilità

Caratteristiche iniziali

Membratura principale per controllo snellezza; Calcolo di snellezze ed N critici condotti secondo gli assi principali;
Curva X: b; Curva Y: c; Svergolamento: Carico all'estradosso; Curva svergolamento: b;

Dati per instabilità attorno a x

Numero rit.	Presente	Ascissa	Campata	βx/m	Vincolo a entrambi estremi	λx/m	λVer
1	Si	0					

Numero rit.	Presente	Ascissa	Campata	βx/m	Vincolo a entrambi estremi	λx/m	λVer
			1-2	1	Si	10.5	Si, (<200)
2	Si	78.5					

Dati per instabilità attorno a y

Numero rit.	Presente	Ascissa	Campata	βy/n	k,LT	kw,LT	Vincolo a entrambi estremi	λy/n	λVer
1	Si	0							
			1-2	1	1	1	Si	17.4	Si, (<200)
2	Si	78.5							

Verifica di stabilità per pressoflessione §C.4.2.4.1.3.3.2 NTC18

X	Comb.	Sfruttamento	Classe	NEd	NRk	Mx,Ed max	Mx,Rk	My,Ed max	My,Rk	χ,x	χ,y	kxx	kxy	kyx	kyy	χ,LT	Verifica
0	SLU 132	0.366	1	-22701.7	124566	185355.2	894223.7	290	430465.2	1	1	0.728	0.276	0.8	0.459	1	Si

Verifica di stabilità per pressoflessione SLD §C.4.2.4.1.3.3.2 NTC18

X	Comb.	Sfruttamento	Classe	NEd	NRk	Mx,Ed max	Mx,Rk	My,Ed max	My,Rk	χ,x	χ,y	kxx	kxy	kyx	kyy	χ,LT	Verifica
0	SLD 14	0.283	1	-15816.2	124566	157163.5	894223.7	1329.2	430465.2	1	1	0.787	0.463	0.8	0.772	1	Si

Verifica di stabilità a taglio anima Y §4.2.4.1.2.4 [4.2.27] NTC18

η	hw	tw	hw/tw max	Verifica
1.2	15.2	0.6	55.46	Si

Verifica di stabilità a taglio anima Y SLD §4.2.4.1.2.4 [4.2.27] NTC18

η	hw	tw	hw/tw max	Verifica
1.2	15.2	0.6	55.46	Si

Verifiche a deformabilità

Mensola X: No; Mensola Y: No.

Frecce lungo X

Ascissa freccia	Combinazione	Freccia	Luce	L/f	L/f,min	Tipo	Verifica
28.8	SLE RA 1	0	78.5	10000	250	Totale	Si
28.8	SLE RA 31	0	78.5	10000	250	Totale	Si
28.8	SLE RA 30	0	78.5	10000	250	Totale	Si
28.8	SLE RA 29	0	78.5	10000	250	Totale	Si
28.8	SLE RA 28	0	78.5	10000	250	Totale	Si
23.5	SLE RA 2	0	78.5	10000	350	Variabile	Si
28.8	SLE RA 31	0	78.5	10000	350	Variabile	Si
28.8	SLE RA 30	0	78.5	10000	350	Variabile	Si
28.8	SLE RA 29	0	78.5	10000	350	Variabile	Si
28.8	SLE RA 28	0	78.5	10000	350	Variabile	Si

Frecce lungo Y

Ascissa freccia	Combinazione	Freccia	Luce	L/f	L/f,min	Tipo	Verifica
36.6	SLE RA 33	0.012	78.5	6740.3	250	Totale	Si
36.6	SLE RA 32	0.012	78.5	6740.3	250	Totale	Si
36.6	SLE RA 25	0.012	78.5	6794.8	250	Totale	Si
36.6	SLE RA 24	0.012	78.5	6794.8	250	Totale	Si
36.6	SLE RA 21	0.012	78.5	6817.2	250	Totale	Si
34	SLE RA 2	0	78.5	10000	350	Variabile	Si
36.6	SLE RA 31	0.001	78.5	10000	350	Variabile	Si
36.6	SLE RA 30	0.001	78.5	10000	350	Variabile	Si
36.6	SLE RA 29	0.001	78.5	10000	350	Variabile	Si
36.6	SLE RA 28	0.001	78.5	10000	350	Variabile	Si

Superelemento in acciaio composto dall'asta 157

Caratteristiche del materiale

Acciaio: S275, fyk = 2750

Caratteristiche geometriche

Lunghezza: 170.7
Nodo iniziale: 112 Nodo finale: 123
Cerniera iniziale: No Cerniera finale: No
Sovraresistenza: 0% Sisma Z: No

Caratteristiche della sezione

Sezione	Rotazione	Area	Jx	Jy	ix	iy	Wx	Wy	Wplx	Wply
HEA180	0	45.3	2512.55	924.65	7.45	4.52	293.87	102.74	325.17	156.53

Verifiche di resistenza

Verifiche a forza assiale §4.2.4.1.2.1 - §4.2.4.1.2.2 NTC18

X	Comb.	Sfruttamento	Classe	NEd	Nc,Rd	Nt,Rd	Riduzione da taglio	ρx	ρy	Verifica
0	SLU 131	0.175	1	-20801.6	118634.3		1	0	0	Si

Verifiche a forza assiale SLD §4.2.4.1.2.1 - §4.2.4.1.2.2 NTC18

X	Comb.	Sfruttamento	Classe	NEd	Nc,Rd	Nt,Rd	Riduzione da taglio	ρx	ρy	Verifica
0	SLD 14	0.119	1	-14160.4	118634.3		1	0	0	Si

Verifica a taglio X §4.2.4.1.2.4 NTC18

X	Comb.	Sfruttamento	VEd	Vc,Rd	Av	Interazione taglio-torsione	Riduzione torsione	Verifica
170.7	SLV 8	0.001	62.6	54396.6	36.18	Considerata	0.99	Si

Verifica a taglio Y §4.2.4.1.2.4 NTC18

X	Comb.	Sfruttamento	VEd	Vc,Rd	Av	Interazione taglio-torsione	Riduzione torsione	Verifica
0	SLU 132	0.208	4563.2	21950.9	14.52	Considerata	1	Si

Verifica a taglio Y SLD §4.2.4.1.2.4 NTC18

X	Comb.	Sfruttamento	VEd	Vc,Rd	Av	Interazione taglio-torsione	Riduzione torsione	Verifica
0	SLD 16	0.16	3517.7	21936.7	14.52	Considerata	1	Si

Verifica a torsione §4.2.4.1.2.5 NTC18

X	Comb.	Sfruttamento torsione	TEd	TRd	Riduzione taglio resistente	Sfruttamento taglio-torsione	τEd,totale	τRd	Verifica
170.7	SLV 8	0.014	253.1	18118.1	Considerata				Si

Verifica a torsione SLD §4.2.4.1.2.5 NTC18

X	Comb.	Sfruttamento torsione	TEd	TRd	Riduzione taglio resistente	Sfruttamento taglio-torsione	τEd,totale	τRd	Verifica
170.7	SLD 8	0.005	96.2	18118.1	Considerata				Si

Verifica a presso/tenso flessione retta X §§ 4.2.4.1.2.3 - 4.2.4.1.2.6 - 4.2.4.1.2.7 - 4.2.4.1.2.8 NTC18

Verifiche eseguite utilizzando la formula conservativa (6.2) §6.2.1 EN 1993-1-1:2005.

X	Comb.	Sfruttamento	Classe	NEd	NRd	Rid. NRd da VEd	Mx,Ed	Mx,Rd	Rid. Mx,Rd da VEd	Rid. Mx,Rd da NEd	ρx	ρy	Verifica
119.5	SLU 99	0.36	1	-20278.3	118634.3	1	-161382	851642	1		0	0	Si

Verifica a presso/tenso flessione deviata §§ 4.2.4.1.2.3 - 4.2.4.1.2.6 - 4.2.4.1.2.7 - 4.2.4.1.2.8 NTC18

Verifiche eseguite utilizzando la formula conservativa (6.2) §6.2.1 EN 1993-1-1:2005.

X	Comb.	Sfruttamento	Classe	NEd	NRd	Rid. NRd da VEd	Mx,Ed	Mx,Rd	My,Ed	My,Rd	Rid. Mx,Rd da VEd	Rid. Mx,Rd da NEd	Rid. My,Rd da VEd	Rid. My,Rd da NEd	α	β	ρx	ρy	Verifica
0	SLV 16	0.32	1	-14470.8	118634.3	1	160773	851642	-3891	409967	1		1				0	0	Si

Verifica a presso/tenso flessione deviata SLD §§ 4.2.4.1.2.3 - 4.2.4.1.2.6 - 4.2.4.1.2.7 - 4.2.4.1.2.8 NTC18

Verifiche eseguite utilizzando la formula conservativa (6.2) §6.2.1 EN 1993-1-1:2005.

X	Comb.	Sfruttamento	Classe	NEd	NRd	Rid. NRd da VEd	Mx,Ed	Mx,Rd	My,Ed	My,Rd	Rid. Mx,Rd da VEd	Rid. Mx,Rd da NEd	Rid. My,Rd da VEd	Rid. My,Rd da NEd	α	β	ρx	ρy	Verifica
0	SLD 16	0.262	1	-14159.4	118634.3	1	118362	851642	-1514	409967	1		1				0	0	Si

Verifiche ad instabilità

Caratteristiche iniziali

Membratura principale per controllo snellezza; Calcolo di snellezze ed N critici condotti secondo gli assi principali;
Curva X: b; Curva Y: c; Svergolamento: Carico all'estradosso; Curva svergolamento: b;

Dati per instabilità attorno a x

Numero rit.	Presente	Ascissa	Campata	βx/m	Vincolo a entrambi estremi	λx/m	λVer
1	Si	0					
			1-2	1	Si	22.9	Si, (<200)
2	Si	170.7					

Dati per instabilità attorno a y

Numero rit.	Presente	Ascissa	Campata	βy/n	k,LT	kw,LT	Vincolo a entrambi estremi	λy/n	λVer
1	Si	0							
			1-2	1	1	1	Si	37.8	Si, (<200)
2	Si	170.7							

Verifica di stabilità per pressoflessione §C.4.2.4.1.3.3.2 NTC18

X	Comb.	Sfruttamento	Classe	NEd	NRk	Mx,Ed max	Mx,Rk	My,Ed max	My,Rk	χ,x	χ,y	kxx	kxy	kyx	kyy	χ,LT	Verifica
0	SLU 132	0.391	1	-20801.6	124566	161507.8	894223.7	92.5	430465.2	0.977	0.879	1.005	0.394	0.988	0.656	0.978	Si

Verifica di stabilità per pressoflessione SLD §C.4.2.4.1.3.3.2 NTC18

X	Comb.	Sfruttamento	Classe	NEd	NRk	Mx,Ed max	Mx,Rk	My,Ed max	My,Rk	χ,x	χ,y	kxx	kxy	kyx	kyy	χ,LT	Verifica
0	SLD 15	0.279	1	-14159.4	124566	118361.7	894223.7	1514.1	430465.2	0.977	0.879	0.687	0.414	0.986	0.69	0.978	Si

Verifica di stabilità a taglio anima Y §4.2.4.1.2.4 [4.2.27] NTC18

η	hw	tw	hw/tw max	Verifica
1.2	15.2	0.6	55.46	Si

Verifica di stabilità a taglio anima Y SLD §4.2.4.1.2.4 [4.2.27] NTC18

η	hw	tw	hw/tw max	Verifica
1.2	15.2	0.6	55.46	Si

Verifiche a deformabilità

Mensola X: No; Mensola Y: No.

Frecce lungo X

Ascissa freccia	Combinazione	Freccia	Luce	L/f	L/f,min	Tipo	Verifica
74	SLE RA 1	0	170.7	10000	250	Totale	Si
74	SLE RA 31	0	170.7	10000	250	Totale	Si

Ascissa freccia	Combinazione	Freccia	Luce	L/f	L/f,min	Tipo	Verifica
74	SLE RA 30	0	170.7	10000	250	Totale	Si
74	SLE RA 29	0	170.7	10000	250	Totale	Si
74	SLE RA 28	0	170.7	10000	250	Totale	Si
62.6	SLE RA 2	0	170.7	10000	350	Variabile	Si
74	SLE RA 31	0	170.7	10000	350	Variabile	Si
74	SLE RA 30	0	170.7	10000	350	Variabile	Si
74	SLE RA 29	0	170.7	10000	350	Variabile	Si
74	SLE RA 28	0	170.7	10000	350	Variabile	Si

Frecce lungo Y

Ascissa freccia	Combinazione	Freccia	Luce	L/f	L/f,min	Tipo	Verifica
96.7	SLE RA 33	-0.073	170.7	2323.6	250	Totale	Si
96.7	SLE RA 32	-0.073	170.7	2323.6	250	Totale	Si
96.7	SLE RA 25	-0.073	170.7	2335.6	250	Totale	Si
96.7	SLE RA 24	-0.073	170.7	2335.6	250	Totale	Si
96.7	SLE RA 21	-0.073	170.7	2340.9	250	Totale	Si
102.4	SLE RA 2	0	170.7	10000	350	Variabile	Si
108.1	SLE RA 31	-0.005	170.7	10000	350	Variabile	Si
108.1	SLE RA 30	-0.005	170.7	10000	350	Variabile	Si
108.1	SLE RA 29	-0.004	170.7	10000	350	Variabile	Si
108.1	SLE RA 28	-0.004	170.7	10000	350	Variabile	Si

Superelemento in acciaio composto dall'asta 158

Caratteristiche del materiale

Acciaio: S275, fyk = 2750

Caratteristiche geometriche

Lunghezza: 170.7
Nodo iniziale: 111 Nodo finale: 123
Cerniera iniziale: No Cerniera finale: No
Sovraresistenza: 0% Sisma Z: No

Caratteristiche della sezione

Sezione	Rotazione	Area	Jx	Jy	ix	iy	Wx	Wy	Wplx	Wply
HEA180	0	45.3	2512.55	924.65	7.45	4.52	293.87	102.74	325.17	156.53

Verifiche di resistenza

Verifiche a forza assiale §4.2.4.1.2.1 - §4.2.4.1.2.2 NTC18

X	Comb.	Sfruttamento	Classe	NEd	Nc,Rd	Nt,Rd	Riduzione da taglio	ρx	ρy	Verifica
0	SLU 131	0.175	1	-20801.2	118634.3		1	0	0	Si

Verifiche a forza assiale SLD §4.2.4.1.2.1 - §4.2.4.1.2.2 NTC18

X	Comb.	Sfruttamento	Classe	NEd	Nc,Rd	Nt,Rd	Riduzione da taglio	ρx	ρy	Verifica
0	SLD 1	0.119	1	-14160.4	118634.3		1	0	0	Si

Verifica a taglio X §4.2.4.1.2.4 NTC18

X	Comb.	Sfruttamento	VEd	Vc,Rd	Av	Interazione taglio-torsione	Riduzione torsione	Verifica
170.7	SLV 12	0.001	-62.6	54396.6	36.18	Considerata	0.99	Si

Verifica a taglio Y §4.2.4.1.2.4 NTC18

X	Comb.	Sfruttamento	VEd	Vc,Rd	Av	Interazione taglio-torsione	Riduzione torsione	Verifica
0	SLU 132	0.208	4559.8	21950.9	14.52	Considerata	1	Si

Verifica a taglio Y SLD §4.2.4.1.2.4 NTC18

X	Comb.	Sfruttamento	VEd	Vc,Rd	Av	Interazione taglio-torsione	Riduzione torsione	Verifica
0	SLD 4	0.16	3517.7	21936.7	14.52	Considerata	1	Si

Verifica a torsione §4.2.4.1.2.5 NTC18

X	Comb.	Sfruttamento torsione	TEd	TRd	Riduzione taglio resistente	Sfruttamento taglio-torsione	τEd,totale	τRd	Verifica
79.6	SLV 12	0.014	-253.1	18118.1	Considerata				Si

Verifica a torsione SLD §4.2.4.1.2.5 NTC18

X	Comb.	Sfruttamento torsione	TEd	TRd	Riduzione taglio resistente	Sfruttamento taglio-torsione	τEd,totale	τRd	Verifica
79.6	SLD 12	0.005	-96.2	18118.1	Considerata				Si

Verifica a presso/tenso flessione retta X §§ 4.2.4.1.2.3 - 4.2.4.1.2.6 - 4.2.4.1.2.7 - 4.2.4.1.2.8 NTC18

Verifiche eseguite utilizzando la formula conservativa (6.2) §6.2.1 EN 1993-1-1:2005.

X	Comb.	Sfruttamento	Classe	NEd	NRd	Rid. NRd da VEd	Mx,Ed	Mx,Rd	Rid. Mx,Rd da VEd	Rid. Mx,Rd da NEd	ρx	ρy	Verifica
119.5	SLU 132	0.361	1	-20277.9	118634.3	1	-161553	851642	1		0	0	Si

Verifica a presso/tenso flessione deviata §§ 4.2.4.1.2.3 - 4.2.4.1.2.6 - 4.2.4.1.2.7 - 4.2.4.1.2.8 NTC18

Verifiche eseguite utilizzando la formula conservativa (6.2) §6.2.1 EN 1993-1-1:2005.

X	Comb.	Sfruttamento	Classe	NEd	NRd	Rid. NRd da VEd	Mx,Ed	Mx,Rd	My,Ed	My,Rd	Rid. Mx,Rd da VEd	Rid. Mx,Rd da NEd	Rid. My,Rd da VEd	Rid. My,Rd da NEd	α	β	ρx	ρy	Verifica
0	SLV 3	0.32	1	-14470.8	118634.3	1	160773	851642	3891	409967	1		1				0	0	Si

Verifica a presso/tenso flessione deviata SLD §§ 4.2.4.1.2.3 - 4.2.4.1.2.6 - 4.2.4.1.2.7 - 4.2.4.1.2.8 NTC18

Verifiche eseguite utilizzando la formula conservativa (6.2) §6.2.1 EN 1993-1-1:2005.

X	Comb.	Sfruttamento	Classe	NEd	NRd	Rid. NRd da VEd	Mx,Ed	Mx,Rd	My,Ed	My,Rd	Rid. Mx,Rd da VEd	Rid. Mx,Rd da NEd	Rid. My,Rd da VEd	Rid. My,Rd da NEd	α	β	ρx	ρy	Verifica
0	SLD 4	0.262	1	-14159.4	118634.3	1	118362	851642	1514	409967	1		1				0	0	Si

Verifiche ad instabilità

Caratteristiche iniziali

Membratura principale per controllo snellezza; Calcolo di snellezze ed N critici condotti secondo gli assi principali;
Curva X: b; Curva Y: c; Svergolamento: Carico all'estradosso; Curva svergolamento: b;

Dati per instabilità attorno a x

Numero rit.	Presente	Ascissa	Campata	βx/m	Vincolo a entrambi estremi	λx/m	λVer
1	Si	0					
			1-2	1	Si	22.9	Si, (<200)
2	Si	170.7					

Dati per instabilità attorno a y

Numero rit.	Presente	Ascissa	Campata	βy/n	k,LT	kw,LT	Vincolo a entrambi estremi	λy/n	λVer
1	Si	0							
			1-2	1	1	1	Si	37.8	Si, (<200)
2	Si	170.7							

Verifica di stabilità per pressoflessione §C.4.2.4.1.3.3.2 NTC18

X	Comb.	Sfruttamento	Classe	NEd	NRk	Mx,Ed max	Mx,Rk	My,Ed max	My,Rk	χ,x	χ,y	kxx	kxy	kyx	kyy	χ,LT	Verifica
0	SLU 132	0.391	1	-20801.2	124566	161660.5	894223.7	92.6	430465.2	0.977	0.879	1.005	0.394	0.988	0.656	0.978	Si

Verifica di stabilità per pressoflessione SLD §C.4.2.4.1.3.3.2 NTC18

X	Comb.	Sfruttamento	Classe	NEd	NRk	Mx,Ed max	Mx,Rk	My,Ed max	My,Rk	χ,x	χ,y	kxx	kxy	kyx	kyy	χ,LT	Verifica
0	SLD 3	0.279	1	-14159.4	124566	118361.7	894223.7	1514.1	430465.2	0.977	0.879	0.687	0.414	0.986	0.69	0.978	Si

Verifica di stabilità a taglio anima Y §4.2.4.1.2.4 [4.2.27] NTC18

η	hw	tw	hw/tw max	Verifica
1.2	15.2	0.6	55.46	Si

Verifica di stabilità a taglio anima Y SLD §4.2.4.1.2.4 [4.2.27] NTC18

η	hw	tw	hw/tw max	Verifica
1.2	15.2	0.6	55.46	Si

Verifiche a deformabilità

Mensola X: No; Mensola Y: No.

Frecce lungo X

Ascissa freccia	Combinazione	Freccia	Luce	L/f	L/f,min	Tipo	Verifica
74	SLE RA 1	0	170.7	10000	250	Totale	Si
74	SLE RA 31	0	170.7	10000	250	Totale	Si
74	SLE RA 30	0	170.7	10000	250	Totale	Si
74	SLE RA 29	0	170.7	10000	250	Totale	Si
74	SLE RA 28	0	170.7	10000	250	Totale	Si
62.6	SLE RA 2	0	170.7	10000	350	Variabile	Si
74	SLE RA 31	0	170.7	10000	350	Variabile	Si
74	SLE RA 30	0	170.7	10000	350	Variabile	Si
74	SLE RA 29	0	170.7	10000	350	Variabile	Si
74	SLE RA 28	0	170.7	10000	350	Variabile	Si

Frecce lungo Y

Ascissa freccia	Combinazione	Freccia	Luce	L/f	L/f,min	Tipo	Verifica
96.7	SLE RA 33	-0.074	170.7	2319.7	250	Totale	Si
96.7	SLE RA 32	-0.074	170.7	2319.7	250	Totale	Si
96.7	SLE RA 25	-0.073	170.7	2332.8	250	Totale	Si
96.7	SLE RA 24	-0.073	170.7	2332.8	250	Totale	Si
96.7	SLE RA 21	-0.073	170.7	2338.9	250	Totale	Si
102.4	SLE RA 2	0	170.7	10000	350	Variabile	Si
108.1	SLE RA 31	-0.005	170.7	10000	350	Variabile	Si
108.1	SLE RA 30	-0.005	170.7	10000	350	Variabile	Si
108.1	SLE RA 29	-0.004	170.7	10000	350	Variabile	Si
108.1	SLE RA 28	-0.004	170.7	10000	350	Variabile	Si

Superelemento in acciaio composto dall'asta 159

Caratteristiche del materiale

Acciaio: S275, fyk = 2750

Caratteristiche geometriche

Lunghezza: 148
Nodo iniziale: 68 Nodo finale: 67
Cerniera iniziale: Svincolo: M2, M3 Cerniera finale: No
Sovraresistenza: 0% Sisma Z: No

Caratteristiche della sezione

Sezione	Rotazione	Area	Jx	Jy	ix	iy	Wx	Wy	Wplx	Wply
HEA160	0	38.82	1674.7	615.62	6.57	3.98	220.36	76.95	245.43	117.67

Verifiche di resistenza

Verifiche a forza assiale §4.2.4.1.2.1 - §4.2.4.1.2.2 NTC18

X	Comb.	Sfruttamento	Classe	NEd	Nc,Rd	Nt,Rd	Riduzione da taglio	ρx	ρy	Verifica
4.9	SLU 99	0.093		9406.7		101662.9	1	0	0	Si

Verifiche a forza assiale SLD §4.2.4.1.2.1 - §4.2.4.1.2.2 NTC18

X	Comb.	Sfruttamento	Classe	NEd	Nc,Rd	Nt,Rd	Riduzione da taglio	ρx	ρy	Verifica
148	SLD 16	0.071		7251.3		101662.9	1	0	0	Si

Verifica a taglio Y §4.2.4.1.2.4 NTC18

X	Comb.	Sfruttamento	VEd	Vc,Rd	Av	Interazione taglio-torsione	Riduzione torsione	Verifica
148	SLV 13	0.042	-840.7	19957	13.26	Considerata	1	Si

Verifica a taglio Y SLD §4.2.4.1.2.4 NTC18

X	Comb.	Sfruttamento	VEd	Vc,Rd	Av	Interazione taglio-torsione	Riduzione torsione	Verifica
148	SLD 14	0.021	-411.7	20010.6	13.26	Considerata	1	Si

Verifica a torsione §4.2.4.1.2.5 NTC18

X	Comb.	Sfruttamento torsione	TEd	TRd	Riduzione taglio resistente	Sfruttamento taglio-torsione	τEd,totale	τRd	Verifica
78.9	SLV 5	0.036	-529.8	14685.6	Considerata				Si

Verifica a torsione SLD §4.2.4.1.2.5 NTC18

X	Comb.	Sfruttamento torsione	TEd	TRd	Riduzione taglio resistente	Sfruttamento taglio-torsione	τEd,totale	τRd	Verifica
78.9	SLD 5	0.014	-203.7	14685.6	Considerata				Si

Verifica a presso/tenso flessione retta X §§ 4.2.4.1.2.3 - 4.2.4.1.2.6 - 4.2.4.1.2.7 - 4.2.4.1.2.8 NTC18

Verifiche eseguite utilizzando la formula conservativa (6.2) §6.2.1 EN 1993-1-1:2005.

X	Comb.	Sfruttamento	Classe	NEd	NRd	Rid. NRd da VEd	Mx,Ed	Mx,Rd	Rid. Mx,Rd da VEd	Rid. Mx,Rd da NEd	ρx	ρy	Verifica
69.1	SLV 16	0.172	1	8689.3	101662.9	1	55685	642783	1		0	0	Si

Verifica a presso/tenso flessione retta X SLD §§ 4.2.4.1.2.3 - 4.2.4.1.2.6 - 4.2.4.1.2.7 - 4.2.4.1.2.8 NTC18

Verifiche eseguite utilizzando la formula conservativa (6.2) §6.2.1 EN 1993-1-1:2005.

X	Comb.	Sfruttamento	Classe	NEd	NRd	Rid. NRd da VEd	Mx,Ed	Mx,Rd	Rid. Mx,Rd da VEd	Rid. Mx,Rd da NEd	ρx	ρy	Verifica
148	SLD 16	0.161	1	7251.3	101662.9	1	57602	642783	1		0	0	Si

Verifica a presso/tenso flessione deviata §§ 4.2.4.1.2.3 - 4.2.4.1.2.6 - 4.2.4.1.2.7 - 4.2.4.1.2.8 NTC18

Verifiche eseguite utilizzando la formula conservativa (6.2) §6.2.1 EN 1993-1-1:2005.

X	Comb.	Sfruttamento	Classe	NEd	NRd	Rid. NRd da VEd	Mx,Ed	Mx,Rd	My,Ed	My,Rd	Rid. Mx,Rd da VEd	Rid. Mx,Rd da NEd	Rid. My,Rd da VEd	Rid. My,Rd da NEd	α	β	ρx	ρy	Verifica
148	SLV 16	0.274	1	8689.3	101662.9	1	121104	642783	-159	308186	1		1				0	0	Si

Verifica a presso/tenso flessione deviata SLD §§ 4.2.4.1.2.3 - 4.2.4.1.2.6 - 4.2.4.1.2.7 - 4.2.4.1.2.8 NTC18

Verifiche eseguite utilizzando la formula conservativa (6.2) §6.2.1 EN 1993-1-1:2005.

X	Comb.	Sfruttamento	Classe	NEd	NRd	Rid. NRd da VEd	Mx,Ed	Mx,Rd	My,Ed	My,Rd	Rid. Mx,Rd da VEd	Rid. Mx,Rd da NEd	Rid. My,Rd da VEd	Rid. My,Rd da NEd	α	β	ρx	ρy	Verifica
148	SLD 12	0.098	1	6437.2	101662.9	1	21588	642783	-201	308186	1		1				0	0	Si

Verifiche ad instabilità

Caratteristiche iniziali

Membratura principale per controllo snellezza; Calcolo di snellezze ed N critici condotti secondo gli assi principali;
Curva X: b; Curva Y: c; Svergolamento: Carico all'estradosso; Curva svergolamento: b;

Dati per instabilità attorno a x

Numero rit.	Presente	Ascissa	Campata	βx/m	Vincolo a entrambi estremi	λx/m	λVer
1	Si	0					
			1-2	1	Si	22.5	Si, (<200)
2	Si	148					

Dati per instabilità attorno a y

Numero rit.	Presente	Ascissa	Campata	βy/n	k,LT	kw,LT	Vincolo a entrambi estremi	λy/n	λVer
1	Si	0							
			1-2	1	1	1	Si	37.2	Si, (<200)
2	Si	148							

Verifica a svergolamento con trazione §4.2.4.1.3.2 NTC18 - §5.5.3 ENV 1993-1-1:1994

X	Comb.	Sfruttamento	Classe	Obblig.	NEd	Mx,Ed	Mx,Eff,Ed	Mb,Rd,x	χ,LT	λ adim. LT	L,LT	M,critico	Verifica
69.1	SLV 2	0.059	1	Si	3482	-51612.8	-37776.2	642783.4	1	0.278	148	8702008.8	Si

Verifica a svergolamento con trazione SLD §4.2.4.1.3.2 NTC18 - §5.5.3 ENV 1993-1-1:1994

X	Comb.	Sfruttamento	Classe	Obblig.	NEd	Mx,Ed	Mx,Eff,Ed	Mb,Rd,x	χ,LT	λ adim. LT	L,LT	M,critico	Verifica
148	SLD 13	0.045	1	Si	7250	57597.2	28787.3	642783.4	1	0.278	148	8702008.8	Si

Verifica di stabilità per tenso-flessione deviata §5.5.3 - §5.5.4 ENV 1993-1-1:1994

X	Comb.	Sfruttamento	Classe	NEd	Mx,Ed	Mx,Eff,Ed	My,Ed	χ,LT	kLT	ky	M,critico	Wx	Wy	Verifica
148	SLV 2	0.148	1	3482	-108819.1	-94982.5	159.4	1	1	1	8702008.8	245.4	117.7	Si

Verifica di stabilità a taglio anima Y §4.2.4.1.2.4 [4.2.27] NTC18

η	hw	tw	hw/tw max	Verifica
1.2	13.4	0.6	55.46	Si

Verifica di stabilità a taglio anima Y SLD §4.2.4.1.2.4 [4.2.27] NTC18

η	hw	tw	hw/tw max	Verifica
1.2	13.4	0.6	55.46	Si

Verifiche a deformabilità

Mensola X: No; Mensola Y: No.

Frecce lungo X

Ascissa freccia	Combinazione	Freccia	Luce	L/f	L/f,min	Tipo	Verifica
14.8	SLE RA 1	0	148	10000	250	Totale	Si
98.7	SLE RA 31	0	148	10000	250	Totale	Si
98.7	SLE RA 30	0	148	10000	250	Totale	Si
98.7	SLE RA 29	0	148	10000	250	Totale	Si
98.7	SLE RA 28	0	148	10000	250	Totale	Si
133.2	SLE RA 2	0	148	10000	350	Variabile	Si
83.9	SLE RA 31	0	148	10000	350	Variabile	Si
83.9	SLE RA 30	0	148	10000	350	Variabile	Si
83.9	SLE RA 29	0	148	10000	350	Variabile	Si
83.9	SLE RA 28	0	148	10000	350	Variabile	Si

Frecce lungo Y

Ascissa freccia	Combinazione	Freccia	Luce	L/f	L/f,min	Tipo	Verifica
88.8	SLE RA 1	0.002	148	10000	250	Totale	Si
88.8	SLE RA 31	0.002	148	10000	250	Totale	Si
88.8	SLE RA 30	0.002	148	10000	250	Totale	Si
88.8	SLE RA 29	0.002	148	10000	250	Totale	Si
88.8	SLE RA 28	0.002	148	10000	250	Totale	Si
83.9	SLE RA 2	0	148	10000	350	Variabile	Si
83.9	SLE RA 31	0	148	10000	350	Variabile	Si
83.9	SLE RA 30	0	148	10000	350	Variabile	Si
83.9	SLE RA 29	0	148	10000	350	Variabile	Si
83.9	SLE RA 28	0	148	10000	350	Variabile	Si

Superelemento in acciaio composto dall'asta 160

Caratteristiche del materiale

Acciaio: S275, fyk = 2750

Caratteristiche geometriche

Lunghezza: 299
Nodo iniziale: 67 Nodo finale: 66
Cerniera iniziale: No Cerniera finale: No
Sovraresistenza: 0% Sisma Z: No

Caratteristiche della sezione

Sezione	Rotazione	Area	Jx	Jy	ix	iy	Wx	Wy	Wplx	Wply
HEA160	0	38.82	1674.7	615.62	6.57	3.98	220.36	76.95	245.43	117.67

Verifiche di resistenza

Verifiche a forza assiale §4.2.4.1.2.1 - §4.2.4.1.2.2 NTC18

X	Comb.	Sfruttamento	Classe	NEd	Nc,Rd	Nt,Rd	Riduzione da taglio	ρx	ρy	Verifica
159.5	SLU 98	0.109		11084.6		101662.9	1	0	0	Si

Verifiche a forza assiale SLD §4.2.4.1.2.1 - §4.2.4.1.2.2 NTC18

X	Comb.	Sfruttamento	Classe	NEd	Nc,Rd	Nt,Rd	Riduzione da taglio	ρx	ρy	Verifica
289	SLD 6	0.069		7029.9		101662.9	1	0	0	Si

Verifica a taglio Y §4.2.4.1.2.4 NTC18

X	Comb.	Sfruttamento	VEd	Vc,Rd	Av	Interazione taglio-torsione	Riduzione torsione	Verifica
0	SLV 16	0.041	814.5	20045.7	13.26	Considerata	1	Si

Verifica a taglio Y SLD §4.2.4.1.2.4 NTC18

X	Comb.	Sfruttamento	VEd	Vc,Rd	Av	Interazione taglio-torsione	Riduzione torsione	Verifica
299	SLD 1	0.019	-389.7	20045.7	13.26	Considerata	1	Si

Verifica a presso/tenso flessione retta X §§ 4.2.4.1.2.3 - 4.2.4.1.2.6 - 4.2.4.1.2.7 - 4.2.4.1.2.8 NTC18

Verifiche eseguite utilizzando la formula conservativa (6.2) §6.2.1 EN 1993-1-1:2005.

X	Comb.	Sfruttamento	Classe	NEd	NRd	Rid. NRd da VEd	Mx,Ed	Mx,Rd	Rid. Mx,Rd da VEd	Rid. Mx,Rd da NEd	ρx	ρy	Verifica
0	SLU 98	0.123	1	11084.6	101662.9	1	9253	642783	1		0	0	Si

Verifica a presso/tenso flessione retta Y SLD §§ 4.2.4.1.2.3 - 4.2.4.1.2.6 - 4.2.4.1.2.7 - 4.2.4.1.2.8 NTC18

Verifiche eseguite utilizzando la formula conservativa (6.2) §6.2.1 EN 1993-1-1:2005.

X	Comb.	Sfruttamento	Classe	NEd	NRd	Rid. NRd da VEd	My,Ed	My,Rd	Rid. My,Rd da VEd	Rid. My,Rd da NEd	ρx	ρy	Verifica
119.6	SLD 7	0.071	1	7025.5	101662.9	1	-566	308186	1		0	0	Si

Verifica a presso/tenso flessione deviata §§ 4.2.4.1.2.3 - 4.2.4.1.2.6 - 4.2.4.1.2.7 - 4.2.4.1.2.8 NTC18

Verifiche eseguite utilizzando la formula conservativa (6.2) §6.2.1 EN 1993-1-1:2005.

X	Comb.	Sfruttamento	Classe	NEd	NRd	Rid. NRd da VEd	Mx,Ed	Mx,Rd	My,Ed	My,Rd	Rid. Mx,Rd da VEd	Rid. Mx,Rd da NEd	Rid. My,Rd da VEd	Rid. My,Rd da NEd	α	β	ρx	ρy	Verifica
299	SLV 2	0.259	1	7029.5	101662.9	1	121092	642783	459	308186	1		1				0	0	Si

Verifica a presso/tenso flessione deviata SLD §§ 4.2.4.1.2.3 - 4.2.4.1.2.6 - 4.2.4.1.2.7 - 4.2.4.1.2.8 NTC18

Verifiche eseguite utilizzando la formula conservativa (6.2) §6.2.1 EN 1993-1-1:2005.

X	Comb.	Sfruttamento	Classe	NEd	NRd	Rid. NRd da VEd	Mx,Ed	Mx,Rd	My,Ed	My,Rd	Rid. Mx,Rd da VEd	Rid. Mx,Rd da NEd	Rid. My,Rd da VEd	Rid. My,Rd da NEd	α	β	ρx	ρy	Verifica
0	SLD 13	0.159	1	7028.4	101662.9	1	57597	642783	178	308186	1		1				0	0	Si

Verifiche ad instabilità

Caratteristiche iniziali

Membratura principale per controllo snellezza; Calcolo di snellezze ed N critici condotti secondo gli assi principali;
Curva X: b; Curva Y: c; Svergolamento: Carico all'estradosso; Curva svergolamento: b;

Dati per instabilità attorno a x

Numero rit.	Presente	Ascissa	Campata	βx/m	Vincolo a entrambi estremi	λx/m	λVer
1	Si	0					
			1-2	1	Si	45.5	Si, (<200)
2	Si	299					

Dati per instabilità attorno a y

Numero rit.	Presente	Ascissa	Campata	βy/n	k,LT	kw,LT	Vincolo a entrambi estremi	λy/n	λVer
1	Si	0							
			1-2	1	1	1	Si	75.1	Si, (<200)
2	Si	299							

Verifica di stabilità per tenso-flessione deviata §5.5.3 - §5.5.4 ENV 1993-1-1:1994

X	Comb.	Sfruttamento	Classe	NEd	Mx,Ed	Mx,Eff,Ed	My,Ed	χ,LT	kLT	ky	M,critico	Wx	Wy	Verifica
0	SLV 16	0.175	1	7026	121104.1	93184.6	-446.3	0.836	1	1	1151208.3	245.4	117.7	Si

Verifica di stabilità per tenso-flessione deviata SLD §5.5.3 - §5.5.4 ENV 1993-1-1:1994

X	Comb.	Sfruttamento	Classe	NEd	Mx,Ed	Mx,Eff,Ed	My,Ed	χ,LT	kLT	ky	M,critico	Wx	Wy	Verifica
0	SLD 13	0.056	1	7028.4	57597.2	29668	177.9	0.836	1	1	1151208.3	245.4	117.7	Si

Verifica di stabilità a taglio anima Y §4.2.4.1.2.4 [4.2.27] NTC18

η	hw	tw	hw/tw max	Verifica
1.2	13.4	0.6	55.46	Si

Verifica di stabilità a taglio anima Y SLD §4.2.4.1.2.4 [4.2.27] NTC18

η	hw	tw	hw/tw max	Verifica
1.2	13.4	0.6	55.46	Si

Verifiche a deformabilità

Mensola X: No; Mensola Y: No.

Frecce lungo X

Ascissa freccia	Combinazione	Freccia	Luce	L/f	L/f,min	Tipo	Verifica
149.5	SLE RA 1	0	299	10000	250	Totale	Si
149.5	SLE RA 31	0	299	10000	250	Totale	Si
149.5	SLE RA 30	0	299	10000	250	Totale	Si
149.5	SLE RA 29	0	299	10000	250	Totale	Si
149.5	SLE RA 28	0	299	10000	250	Totale	Si
149.5	SLE RA 2	0	299	10000	350	Variabile	Si
149.5	SLE RA 31	0	299	10000	350	Variabile	Si
149.5	SLE RA 30	0	299	10000	350	Variabile	Si
149.5	SLE RA 29	0	299	10000	350	Variabile	Si
149.5	SLE RA 28	0	299	10000	350	Variabile	Si

Frecce lungo Y

Ascissa freccia	Combinazione	Freccia	Luce	L/f	L/f,min	Tipo	Verifica
149.5	SLE RA 1	0.01	299	10000	250	Totale	Si
149.5	SLE RA 31	0.012	299	10000	250	Totale	Si
149.5	SLE RA 30	0.012	299	10000	250	Totale	Si
149.5	SLE RA 29	0.012	299	10000	250	Totale	Si
149.5	SLE RA 28	0.012	299	10000	250	Totale	Si
149.5	SLE RA 2	0	299	10000	350	Variabile	Si
139.5	SLE RA 31	0.002	299	10000	350	Variabile	Si
139.5	SLE RA 30	0.002	299	10000	350	Variabile	Si
139.5	SLE RA 29	0.002	299	10000	350	Variabile	Si
139.5	SLE RA 28	0.002	299	10000	350	Variabile	Si

Superelemento in acciaio composto dall'asta 161

Caratteristiche del materiale

Acciaio: S275, fyk = 2750

Caratteristiche geometriche

Lunghezza: 148
Nodo iniziale: 66 Nodo finale: 65
Cerniera iniziale: No Cerniera finale: Svincolo: M2, M3
Sovraresistenza: 0% Sisma Z: No

Caratteristiche della sezione

Sezione	Rotazione	Area	Jx	Jy	ix	iy	Wx	Wy	Wplx	Wply
HEA160	0	38.82	1674.7	615.62	6.57	3.98	220.36	76.95	245.43	117.67

Verifiche di resistenza

Verifiche a forza assiale §4.2.4.1.2.1 - §4.2.4.1.2.2 NTC18

X	Comb.	Sfruttamento	Classe	NEd	Nc,Rd	Nt,Rd	Riduzione da taglio	ρx	ρy	Verifica
143.1	SLU 132	0.092		9398.1		101662.9	1	0	0	Si

Verifiche a forza assiale SLD §4.2.4.1.2.1 - §4.2.4.1.2.2 NTC18

X	Comb.	Sfruttamento	Classe	NEd	Nc,Rd	Nt,Rd	Riduzione da taglio	ρx	ρy	Verifica
148	SLD 3	0.071		7251.3		101662.9	1	0	0	Si

Verifica a taglio Y §4.2.4.1.2.4 NTC18

X	Comb.	Sfruttamento	VEd	Vc,Rd	Av	Interazione taglio-torsione	Riduzione torsione	Verifica
0	SLV 2	0.042	840.7	19957	13.26	Considerata	1	Si

Verifica a taglio Y SLD §4.2.4.1.2.4 NTC18

X	Comb.	Sfruttamento	VEd	Vc,Rd	Av	Interazione taglio-torsione	Riduzione torsione	Verifica
0	SLD 1	0.021	411.7	20010.6	13.26	Considerata	1	Si

Verifica a torsione §4.2.4.1.2.5 NTC18

X	Comb.	Sfruttamento torsione	TEd	TRd	Riduzione taglio resistente	Sfruttamento taglio-torsione	τEd,totale	τRd	Verifica
148	SLV 10	0.036	529.8	14685.6	Considerata				Si

Verifica a torsione SLD §4.2.4.1.2.5 NTC18

X	Comb.	Sfruttamento torsione	TEd	TRd	Riduzione taglio resistente	Sfruttamento taglio-torsione	τEd,totale	τRd	Verifica
148	SLD 10	0.014	203.7	14685.6	Considerata				Si

Verifica a presso/tenso flessione retta X §§ 4.2.4.1.2.3 - 4.2.4.1.2.6 - 4.2.4.1.2.7 - 4.2.4.1.2.8 NTC18

Verifiche eseguite utilizzando la formula conservativa (6.2) §6.2.1 EN 1993-1-1:2005.

X	Comb.	Sfruttamento	Classe	NEd	NRd	Rid. NRd da VEd	Mx,Ed	Mx,Rd	Rid. Mx,Rd da VEd	Rid. Mx,Rd da NEd	ρx	ρy	Verifica
78.9	SLV 3	0.172	1	8689.3	101662.9	1	55685	642783	1		0	0	Si

Verifica a presso/tenso flessione retta X SLD §§ 4.2.4.1.2.3 - 4.2.4.1.2.6 - 4.2.4.1.2.7 - 4.2.4.1.2.8 NTC18

Verifiche eseguite utilizzando la formula conservativa (6.2) §6.2.1 EN 1993-1-1:2005.

X	Comb.	Sfruttamento	Classe	NEd	NRd	Rid. NRd da VEd	Mx,Ed	Mx,Rd	Rid. Mx,Rd da VEd	Rid. Mx,Rd da NEd	ρx	ρy	Verifica
0	SLD 4	0.161	1	7251.3	101662.9	1	57602	642783	1		0	0	Si

Verifica a presso/tenso flessione deviata §§ 4.2.4.1.2.3 - 4.2.4.1.2.6 - 4.2.4.1.2.7 - 4.2.4.1.2.8 NTC18

Verifiche eseguite utilizzando la formula conservativa (6.2) §6.2.1 EN 1993-1-1:2005.

X	Comb.	Sfruttamento	Classe	NEd	NRd	Rid. NRd da VEd	Mx,Ed	Mx,Rd	My,Ed	My,Rd	Rid. Mx,Rd da VEd	Rid. Mx,Rd da NEd	Rid. My,Rd da VEd	Rid. My,Rd da NEd	α	β	ρx	ρy	Verifica
0	SLV 4	0.274	1	8689.3	101662.9	1	121104	642783	-159	308186	1		1				0	0	Si

Verifica a presso/tenso flessione deviata SLD §§ 4.2.4.1.2.3 - 4.2.4.1.2.6 - 4.2.4.1.2.7 - 4.2.4.1.2.8 NTC18

Verifiche eseguite utilizzando la formula conservativa (6.2) §6.2.1 EN 1993-1-1:2005.

X	Comb.	Sfruttamento	Classe	NEd	NRd	Rid. NRd da VEd	Mx,Ed	Mx,Rd	My,Ed	My,Rd	Rid. Mx,Rd da VEd	Rid. Mx,Rd da NEd	Rid. My,Rd da VEd	Rid. My,Rd da NEd	α	β	ρx	ρy	Verifica
0	SLD 8	0.098	1	6437.2	101662.9	1	21588	642783	-201	308186	1		1				0	0	Si

Verifiche ad instabilità

Caratteristiche iniziali

Membratura principale per controllo snellezza; Calcolo di snellezze ed N critici condotti secondo gli assi principali;
Curva X: b; Curva Y: c; Svergolamento: Carico all'estradosso; Curva svergolamento: b;

Dati per instabilità attorno a x

Numero rit.	Presente	Ascissa	Campata	βx/m	Vincolo a entrambi estremi	λx/m	λVer
1	Si	0					
			1-2	1	Si	22.5	Si, (<200)
2	Si	148					

Dati per instabilità attorno a y

Numero rit.	Presente	Ascissa	Campata	βy/n	k,LT	kw,LT	Vincolo a entrambi estremi	λy/n	λVer
1	Si	0							
			1-2	1	1	1	Si	37.2	Si, (<200)
2	Si	148							

Verifica a svergolamento con trazione §4.2.4.1.3.2 NTC18 - §5.5.3 ENV 1993-1-1:1994

X	Comb.	Sfruttamento	Classe	Obblig.	NEd	Mx,Ed	Mx,Eff,Ed	Mb,Rd,x	χ,LT	λ adim. LT	L,LT	M,critico	Verifica
78.9	SLV 14	0.059	1	Si	3482	-51612.8	-37776.2	642783.4	1	0.278	148	8702008.8	Si

Verifica a svergolamento con trazione SLD §4.2.4.1.3.2 NTC18 - §5.5.3 ENV 1993-1-1:1994

X	Comb.	Sfruttamento	Classe	Obblig.	NEd	Mx,Ed	Mx,Eff,Ed	Mb,Rd,x	χ,LT	λ adim. LT	L,LT	M,critico	Verifica
0	SLD 1	0.045	1	Si	7250	57597.2	28787.3	642783.4	1	0.278	148	8702008.8	Si

Verifica di stabilità per tenso-flessione deviata §5.5.3 - §5.5.4 ENV 1993-1-1:1994

X	Comb.	Sfruttamento	Classe	NEd	Mx,Ed	Mx,Eff,Ed	My,Ed	χ,LT	kLT	ky	M,critico	Wx	Wy	Verifica
0	SLV 13	0.148	1	3482	-108819.1	-94982.5	159.4	1	1	1	8702008.8	245.4	117.7	Si

Verifica di stabilità a taglio anima Y §4.2.4.1.2.4 [4.2.27] NTC18

η	hw	tw	hw/tw max	Verifica
1.2	13.4	0.6	55.46	Si

Verifica di stabilità a taglio anima Y SLD §4.2.4.1.2.4 [4.2.27] NTC18

η	hw	tw	hw/tw max	Verifica
1.2	13.4	0.6	55.46	Si

Verifiche a deformabilità

Mensola X: No; Mensola Y: No.

Frecce lungo X

Ascissa freccia	Combinazione	Freccia	Luce	L/f	L/f,min	Tipo	Verifica
59.2	SLE RA 1	0	148	10000	250	Totale	Si
59.2	SLE RA 31	0	148	10000	250	Totale	Si
59.2	SLE RA 30	0	148	10000	250	Totale	Si
59.2	SLE RA 29	0	148	10000	250	Totale	Si
59.2	SLE RA 28	0	148	10000	250	Totale	Si
133.2	SLE RA 2	0	148	10000	350	Variabile	Si
59.2	SLE RA 31	0	148	10000	350	Variabile	Si
59.2	SLE RA 30	0	148	10000	350	Variabile	Si
59.2	SLE RA 29	0	148	10000	350	Variabile	Si
59.2	SLE RA 28	0	148	10000	350	Variabile	Si

Frecce lungo Y

Ascissa freccia	Combinazione	Freccia	Luce	L/f	L/f,min	Tipo	Verifica
59.2	SLE RA 1	0.002	148	10000	250	Totale	Si
59.2	SLE RA 31	0.002	148	10000	250	Totale	Si
59.2	SLE RA 30	0.002	148	10000	250	Totale	Si
59.2	SLE RA 29	0.002	148	10000	250	Totale	Si
59.2	SLE RA 28	0.002	148	10000	250	Totale	Si
64.1	SLE RA 2	0	148	10000	350	Variabile	Si
64.1	SLE RA 31	0	148	10000	350	Variabile	Si
64.1	SLE RA 30	0	148	10000	350	Variabile	Si
64.1	SLE RA 29	0	148	10000	350	Variabile	Si
64.1	SLE RA 28	0	148	10000	350	Variabile	Si

Superelemento in acciaio composto dall'asta 162

Caratteristiche del materiale

Acciaio: S275, fyk = 2750

Caratteristiche geometriche

Lunghezza: 215.2
Nodo iniziale: 23 Nodo finale: 67
Cerniera iniziale: Svincolo: M2, M3 Cerniera finale: Svincolo: M2, M3
Sovraresistenza: 0% Sisma Z: No

Caratteristiche della sezione

Sezione	Rotazione	Area	Jx	Jy	ix	iy	Wx	Wy	Wplx	Wply
HEA160	0	38.82	1674.7	615.62	6.57	3.98	220.36	76.95	245.43	117.67

Verifiche di resistenza

Verifiche a forza assiale §4.2.4.1.2.1 - §4.2.4.1.2.2 NTC18

X	Comb.	Sfruttamento	Classe	NEd	Nc,Rd	Nt,Rd	Riduzione da taglio	ρx	ρy	Verifica
215.2	SLV 1	0.035		3525.7		101662.9	1	0	0	Si

Verifiche a forza assiale SLD §4.2.4.1.2.1 - §4.2.4.1.2.2 NTC18

X	Comb.	Sfruttamento	Classe	NEd	Nc,Rd	Nt,Rd	Riduzione da taglio	ρx	ρy	Verifica
215.2	SLD 2	0.018		1792		101662.9	1	0	0	Si

Verifica a taglio Y §4.2.4.1.2.4 NTC18

X	Comb.	Sfruttamento	VEd	Vc,Rd	Av	Interazione taglio-torsione	Riduzione torsione	Verifica
215.2	SLU 116	0.002	-37.7	20045.7	13.26	Considerata	1	Si

Verifica a taglio Y SLD §4.2.4.1.2.4 NTC18

X	Comb.	Sfruttamento	VEd	Vc,Rd	Av	Interazione taglio-torsione	Riduzione torsione	Verifica
0	SLD 10	0.001	29	19890.5	13.26	Considerata	0.99	Si

Verifica a torsione §4.2.4.1.2.5 NTC18

X	Comb.	Sfruttamento torsione	TEd	TRd	Riduzione taglio resistente	Sfruttamento taglio-torsione	τEd,totale	τRd	Verifica
215.2	SLV 10	0.05	-740.4	14685.6	Considerata				Si

Verifica a torsione SLD §4.2.4.1.2.5 NTC18

X	Comb.	Sfruttamento torsione	TEd	TRd	Riduzione taglio resistente	Sfruttamento taglio-torsione	τEd,totale	τRd	Verifica
215.2	SLD 10	0.019	-283.1	14685.6	Considerata				Si

Verifica a flessione semplice X SLD §§ 4.2.4.1.2.3 - 4.2.4.1.2.6 - 4.2.4.1.2.7 - 4.2.4.1.2.8 NTC18

X	Comb.	Sfruttamento	Classe	Mx,Ed	Mx,Rd	Rid. Mx,Rd da VEd	ρx	ρy	Verifica
164.9	SLD 9	0.002	1	-1117.1	642783.4	1	0	0	Si

Verifica a presso/tenso flessione retta X §§ 4.2.4.1.2.3 - 4.2.4.1.2.6 - 4.2.4.1.2.7 - 4.2.4.1.2.8 NTC18

Verifiche eseguite utilizzando la formula conservativa (6.2) §6.2.1 EN 1993-1-1:2005.

X	Comb.	Sfruttamento	Classe	NEd	NRd	Rid. NRd da VEd	Mx,Ed	Mx,Rd	Rid. Mx,Rd da VEd	Rid. Mx,Rd da NEd	ρx	ρy	Verifica
107.6	SLV 1	0.037	1	3510.5	101662.9	1	-1561	642783	1		0	0	Si

Verifica a presso/tenso flessione retta X SLD §§ 4.2.4.1.2.3 - 4.2.4.1.2.6 - 4.2.4.1.2.7 - 4.2.4.1.2.8 NTC18

Verifiche eseguite utilizzando la formula conservativa (6.2) §6.2.1 EN 1993-1-1:2005.

X	Comb.	Sfruttamento	Classe	NEd	NRd	Rid. NRd da VEd	Mx,Ed	Mx,Rd	Rid. Mx,Rd da VEd	Rid. Mx,Rd da NEd	ρx	ρy	Verifica
107.6	SLD 1	0.02	1	1776.8	101662.9	1	-1561	642783	1		0	0	Si

Verifiche ad instabilità

Caratteristiche iniziali

Membratura principale per controllo snellezza; Calcolo di snellezze ed N critici condotti secondo gli assi principali;
Curva X: b; Curva Y: c; Svergolamento: Carico all'estradosso; Curva svergolamento: b;

Dati per instabilità attorno a x

Numero rit.	Presente	Ascissa	Campata	βx/m	Vincolo a entrambi estremi	λx/m	λVer
1	Si	0					
			1-2	1	Si	32.8	Si, (<200)
2	Si	215.2					

Dati per instabilità attorno a y

Numero rit.	Presente	Ascissa	Campata	βy/n	k,LT	kw,LT	Vincolo a entrambi estremi	λy/n	λVer
1	Si	0							
			1-2	1	1	1	Si	54	Si, (<200)
2	Si	215.2							

Verifica a svergolamento SLD §4.2.4.1.3.2 NTC18

X	Comb.	Sfruttamento	Classe	Obblig.	Mx,Ed	Mb,Rd,x	χ,LT	λ adim. LT	L,LT	M,critico	Verifica
164.9	SLD 9	0.002	1	Si	-1117.1	588430.1	0.915	0.604	215.2	1851896.4	Si

Verifica a svergolamento con trazione §4.2.4.1.3.2 NTC18 - §5.5.3 ENV 1993-1-1:1994

X	Comb.	Sfruttamento	Classe	Obblig.	NEd	Mx,Ed	Mx,Eff,Ed	Mb,Rd,x	χ,LT	λ adim. LT	L,LT	M,critico	Verifica
107.6	SLU 68	0	1	Si	483.4	-2029.5	-108.4	588430.1	0.915	0.604	215.2	1851896.4	Si

Verifica di stabilità per pressoflessione §C.4.2.4.1.3.3.2 NTC18

X	Comb.	Sfruttamento	Classe	NEd	NRk	Mx,Ed max	Mx,Rk	My,Ed max	My,Rk	χ,x	χ,y	kxx	kxy	kyx	kyy	χ,LT	Verifica
0	SLV 16	0.038	1	-2781.9	106746.1	1561.1	674922.6	1.1	323595.1	0.935	0.772	0.955	0.583	0.997	0.972	0.915	Si

Verifica di stabilità per pressoflessione SLD §C.4.2.4.1.3.3.2 NTC18

X	Comb.	Sfruttamento	Classe	NEd	NRk	Mx,Ed max	Mx,Rk	My,Ed max	My,Rk	χ,x	χ,y	kxx	kxy	kyx	kyy	χ,LT	Verifica
0	SLD 16	0.016	1	-1048.2	106746.1	1561.1	674922.6	1.1	323595.1	0.935	0.772	0.952	0.575	0.999	0.958	0.915	Si

Verifica di stabilità a taglio anima Y §4.2.4.1.2.4 [4.2.27] NTC18

η	hw	tw	hw/tw max	Verifica
1.2	13.4	0.6	55.46	Si

Verifica di stabilità a taglio anima Y SLD §4.2.4.1.2.4 [4.2.27] NTC18

η	hw	tw	hw/tw max	Verifica
1.2	13.4	0.6	55.46	Si

Verifiche a deformabilità

Mensola X: No; Mensola Y: No.

Frecce lungo X

Ascissa freccia	Combinazione	Freccia	Luce	L/f	L/f,min	Tipo	Verifica
107.6	SLE RA 1	0	215.2	10000	250	Totale	Si
107.6	SLE RA 31	0	215.2	10000	250	Totale	Si
107.6	SLE RA 30	0	215.2	10000	250	Totale	Si
107.6	SLE RA 29	0	215.2	10000	250	Totale	Si
107.6	SLE RA 28	0	215.2	10000	250	Totale	Si
172.1	SLE RA 2	0	215.2	10000	350	Variabile	Si
179.3	SLE RA 31	0	215.2	10000	350	Variabile	Si
179.3	SLE RA 30	0	215.2	10000	350	Variabile	Si
186.5	SLE RA 29	0	215.2	10000	350	Variabile	Si
186.5	SLE RA 28	0	215.2	10000	350	Variabile	Si

Frecce lungo Y

Ascissa freccia	Combinazione	Freccia	Luce	L/f	L/f,min	Tipo	Verifica
107.6	SLE RA 1	-0.002	215.2	10000	250	Totale	Si
107.6	SLE RA 31	-0.002	215.2	10000	250	Totale	Si

Ascissa freccia	Combinazione	Freccia	Luce	L/f	L/f,min	Tipo	Verifica
107.6	SLE RA 30	-0.002	215.2	10000	250	Totale	Si
107.6	SLE RA 29	-0.002	215.2	10000	250	Totale	Si
107.6	SLE RA 28	-0.002	215.2	10000	250	Totale	Si
208	SLE RA 2	0	215.2	10000	350	Variabile	Si
150.6	SLE RA 31	0	215.2	10000	350	Variabile	Si
150.6	SLE RA 30	0	215.2	10000	350	Variabile	Si
143.4	SLE RA 29	0	215.2	10000	350	Variabile	Si
143.4	SLE RA 28	0	215.2	10000	350	Variabile	Si

Superelemento in acciaio composto dall'asta 163

Caratteristiche del materiale

Acciaio: S275, fyk = 2750

Caratteristiche geometriche

Lunghezza: 215.2
Nodo iniziale: 22 Nodo finale: 66
Cerniera iniziale: Svincolo: M2, M3 Cerniera finale: Svincolo: M2, M3
Sovraresistenza: 0% Sisma Z: No

Caratteristiche della sezione

Sezione	Rotazione	Area	Jx	Jy	ix	iy	Wx	Wy	Wplx	Wply
HEA160	0	38.82	1674.7	615.62	6.57	3.98	220.36	76.95	245.43	117.67

Verifiche di resistenza

Verifiche a forza assiale §4.2.4.1.2.1 - §4.2.4.1.2.2 NTC18

X	Comb.	Sfruttamento	Classe	NEd	Nc,Rd	Nt,Rd	Riduzione da taglio	ρx	ρy	Verifica
215.2	SLV 13	0.035		3525.7		101662.9	1	0	0	Si

Verifiche a forza assiale SLD §4.2.4.1.2.1 - §4.2.4.1.2.2 NTC18

X	Comb.	Sfruttamento	Classe	NEd	Nc,Rd	Nt,Rd	Riduzione da taglio	ρx	ρy	Verifica
215.2	SLD 13	0.018		1792		101662.9	1	0	0	Si

Verifica a taglio Y §4.2.4.1.2.4 NTC18

X	Comb.	Sfruttamento	VEd	Vc,Rd	Av	Interazione taglio-torsione	Riduzione torsione	Verifica
0	SLU 98	0.002	37.7	20045.7	13.26	Considerata	1	Si

Verifica a taglio Y SLD §4.2.4.1.2.4 NTC18

X	Comb.	Sfruttamento	VEd	Vc,Rd	Av	Interazione taglio-torsione	Riduzione torsione	Verifica
0	SLD 5	0.001	29	19890.5	13.26	Considerata	0.99	Si

Verifica a torsione §4.2.4.1.2.5 NTC18

X	Comb.	Sfruttamento torsione	TEd	TRd	Riduzione taglio resistente	Sfruttamento taglio-torsione	τEd,totale	τRd	Verifica
114.7	SLV 5	0.05	740.4	14685.6	Considerata				Si

Verifica a torsione SLD §4.2.4.1.2.5 NTC18

X	Comb.	Sfruttamento torsione	TEd	TRd	Riduzione taglio resistente	Sfruttamento taglio-torsione	τEd,totale	τRd	Verifica
114.7	SLD 5	0.019	283.1	14685.6	Considerata				Si

Verifica a flessione semplice X SLD §§ 4.2.4.1.2.3 - 4.2.4.1.2.6 - 4.2.4.1.2.7 - 4.2.4.1.2.8 NTC18

X	Comb.	Sfruttamento	Classe	Mx,Ed	Mx,Rd	Rid. Mx,Rd da VEd	ρx	ρy	Verifica
164.9	SLD 5	0.002	1	-1117.1	642783.4	1	0	0	Si

Verifica a presso/tenso flessione retta X §§ 4.2.4.1.2.3 - 4.2.4.1.2.6 - 4.2.4.1.2.7 - 4.2.4.1.2.8 NTC18

Verifiche eseguite utilizzando la formula conservativa (6.2) §6.2.1 EN 1993-1-1:2005.

X	Comb.	Sfruttamento	Classe	NEd	NRd	Rid. NRd da VEd	Mx,Ed	Mx,Rd	Rid. Mx,Rd da VEd	Rid. Mx,Rd da NEd	ρx	ρy	Verifica
107.6	SLV 14	0.037	1	3510.5	101662.9	1	-1561	642783	1		0	0	Si

Verifica a presso/tenso flessione retta X SLD §§ 4.2.4.1.2.3 - 4.2.4.1.2.6 - 4.2.4.1.2.7 - 4.2.4.1.2.8 NTC18

Verifiche eseguite utilizzando la formula conservativa (6.2) §6.2.1 EN 1993-1-1:2005.

X	Comb.	Sfruttamento	Classe	NEd	NRd	Rid. NRd da VEd	Mx,Ed	Mx,Rd	Rid. Mx,Rd da VEd	Rid. Mx,Rd da NEd	ρx	ρy	Verifica
107.6	SLD 14	0.02	1	1776.8	101662.9	1	-1561	642783	1		0	0	Si

Verifiche ad instabilità

Caratteristiche iniziali

Membratura principale per controllo snellezza; Calcolo di snellezze ed N critici condotti secondo gli assi principali;
Curva X: b; Curva Y: c; Svergolamento: Carico all'estradosso; Curva svergolamento: b;

Dati per instabilità attorno a x

Numero rit.	Presente	Ascissa	Campata	βx/m	Vincolo a entrambi estremi	λx/m	λVer
1	Si	0					
			1-2	1	Si	32.8	Si, (<200)
2	Si	215.2					

Dati per instabilità attorno a y

Numero rit.	Presente	Ascissa	Campata	βy/n	k,LT	kw,LT	Vincolo a entrambi estremi	λy/n	λVer
1	Si	0							
			1-2	1	1	1	Si	54	Si, (<200)
2	Si	215.2							

Verifica a svergolamento SLD §4.2.4.1.3.2 NTC18

X	Comb.	Sfruttamento	Classe	Obblig.	Mx,Ed	Mb,Rd,x	χ,LT	λ adim. LT	L,LT	M,critico	Verifica
164.9	SLD 5	0.002	1	Si	-1117.1	588430.3	0.915	0.604	215.2	1851899.2	Si

Verifica a svergolamento con trazione §4.2.4.1.3.2 NTC18 - §5.5.3 ENV 1993-1-1:1994

X	Comb.	Sfruttamento	Classe	Obblig.	NEd	Mx,Ed	Mx,Eff,Ed	Mb,Rd,x	χ,LT	λ adim. LT	L,LT	M,critico	Verifica
107.6	SLU 68	0	1	Si	483.4	-2029.5	-108.4	588430.3	0.915	0.604	215.2	1851899.2	Si

Verifica di stabilità per pressoflessione §C.4.2.4.1.3.3.2 NTC18

X	Comb.	Sfruttamento	Classe	NEd	NRk	Mx,Ed max	Mx,Rk	My,Ed max	My,Rk	χ,x	χ,y	kxx	kxy	kyx	kyy	χ,LT	Verifica
0	SLV 3	0.038	1	-2781.9	106746.1	1561.1	674922.6	0	323595.1	0.935	0.772	0.955	0.368	0.997	0.614	0.915	Si

Verifica di stabilità per pressoflessione SLD §C.4.2.4.1.3.3.2 NTC18

X	Comb.	Sfruttamento	Classe	NEd	NRk	Mx,Ed max	Mx,Rk	My,Ed max	My,Rk	χ,x	χ,y	kxx	kxy	kyx	kyy	χ,LT	Verifica
0	SLD 3	0.016	1	-1048.2	106746.1	1561.1	674922.6	0	323595.1	0.935	0.772	0.952	0.363	0.999	0.605	0.915	Si

Verifica di stabilità a taglio anima Y §4.2.4.1.2.4 [4.2.27] NTC18

η	hw	tw	hw/tw max	Verifica
1.2	13.4	0.6	55.46	Si

Verifica di stabilità a taglio anima Y SLD §4.2.4.1.2.4 [4.2.27] NTC18

η	hw	tw	hw/tw max	Verifica
1.2	13.4	0.6	55.46	Si

Verifiche a deformabilità

Mensola X: No; Mensola Y: No.

Frecce lungo X

Ascissa freccia	Combinazione	Freccia	Luce	L/f	L/f,min	Tipo	Verifica
200.8	SLE RA 1	0	215.2	10000	250	Totale	Si
200.8	SLE RA 31	0	215.2	10000	250	Totale	Si
200.8	SLE RA 30	0	215.2	10000	250	Totale	Si
200.8	SLE RA 29	0	215.2	10000	250	Totale	Si
200.8	SLE RA 28	0	215.2	10000	250	Totale	Si
208	SLE RA 2	0	215.2	10000	350	Variabile	Si
200.8	SLE RA 31	0	215.2	10000	350	Variabile	Si
200.8	SLE RA 30	0	215.2	10000	350	Variabile	Si
200.8	SLE RA 29	0	215.2	10000	350	Variabile	Si
200.8	SLE RA 28	0	215.2	10000	350	Variabile	Si

Frecce lungo Y

Ascissa freccia	Combinazione	Freccia	Luce	L/f	L/f,min	Tipo	Verifica
107.6	SLE RA 1	-0.002	215.2	10000	250	Totale	Si
107.6	SLE RA 31	-0.002	215.2	10000	250	Totale	Si
107.6	SLE RA 30	-0.002	215.2	10000	250	Totale	Si
107.6	SLE RA 29	-0.002	215.2	10000	250	Totale	Si
107.6	SLE RA 28	-0.002	215.2	10000	250	Totale	Si
121.9	SLE RA 2	0	215.2	10000	350	Variabile	Si
164.9	SLE RA 31	0	215.2	10000	350	Variabile	Si
164.9	SLE RA 30	0	215.2	10000	350	Variabile	Si
179.3	SLE RA 29	0	215.2	10000	350	Variabile	Si
179.3	SLE RA 28	0	215.2	10000	350	Variabile	Si

Superelemento in acciaio composto dall'asta 164

Caratteristiche del materiale

Acciaio: S275, fyk = 2750

Caratteristiche geometriche

Lunghezza: 105.1
Nodo iniziale: 67 Nodo finale: 90
Cerniera iniziale: Svincolo: M2, M3 Cerniera finale: Svincolo: M2, M3
Sovraresistenza: 0% Sisma Z: No

Caratteristiche della sezione

Sezione	Rotazione	Area	Jx	Jy	ix	iy	Wx	Wy	Wplx	Wply
HEA160	0	38.82	1674.7	615.62	6.57	3.98	220.36	76.95	245.43	117.67

Verifiche di resistenza

Verifiche a forza assiale §4.2.4.1.2.1 - §4.2.4.1.2.2 NTC18

X	Comb.	Sfruttamento	Classe	NEd	Nc,Rd	Nt,Rd	Riduzione da taglio	ρx	ρy	Verifica
105.1	SLU 86	0.012		1231.5		101662.9	1	0	0	Si

Verifiche a forza assiale SLD §4.2.4.1.2.1 - §4.2.4.1.2.2 NTC18

X	Comb.	Sfruttamento	Classe	NEd	Nc,Rd	Nt,Rd	Riduzione da taglio	ρx	ρy	Verifica
105.1	SLD 13	0.008		802.9		101662.9	1	0	0	Si

Verifica a taglio Y §4.2.4.1.2.4 NTC18

X	Comb.	Sfruttamento	VEd	Vc,Rd	Av	Interazione taglio-torsione	Riduzione torsione	Verifica
0	SLU 132	0.001	18.3	20038.4	13.26	Considerata	1	Si

Verifica a taglio Y SLD §4.2.4.1.2.4 NTC18

X	Comb.	Sfruttamento	VEd	Vc,Rd	Av	Interazione taglio-torsione	Riduzione torsione	Verifica
105.1	SLD 10	0.001	-14.1	19761.7	13.26	Considerata	0.99	Si

Verifica a torsione §4.2.4.1.2.5 NTC18

X	Comb.	Sfruttamento torsione	TEd	TRd	Riduzione taglio resistente	Sfruttamento taglio-torsione	τEd,totale	τRd	Verifica
101.6	SLV 9	0.092	1347.4	14685.6	Considerata				Si

Verifica a torsione SLD §4.2.4.1.2.5 NTC18

X	Comb.	Sfruttamento torsione	TEd	TRd	Riduzione taglio resistente	Sfruttamento taglio-torsione	τEd,totale	τRd	Verifica
105.1	SLD 10	0.035	516.4	14685.6	Considerata				Si

Verifica a presso/tenso flessione retta X §§ 4.2.4.1.2.3 - 4.2.4.1.2.6 - 4.2.4.1.2.7 - 4.2.4.1.2.8 NTC18

Verifiche eseguite utilizzando la formula conservativa (6.2) §6.2.1 EN 1993-1-1:2005.

X	Comb.	Sfruttamento	Classe	NEd	NRd	Rid. NRd da VEd	Mx,Ed	Mx,Rd	Rid. Mx,Rd da VEd	Rid. Mx,Rd da NEd	ρx	ρy	Verifica
56.1	SLU 86	0.013	1	1222.3	101662.9	1	-479	642783	1		0	0	Si

Verifica a presso/tenso flessione retta X SLD §§ 4.2.4.1.2.3 - 4.2.4.1.2.6 - 4.2.4.1.2.7 - 4.2.4.1.2.8 NTC18

Verifiche eseguite utilizzando la formula conservativa (6.2) §6.2.1 EN 1993-1-1:2005.

X	Comb.	Sfruttamento	Classe	NEd	NRd	Rid. NRd da VEd	Mx,Ed	Mx,Rd	Rid. Mx,Rd da VEd	Rid. Mx,Rd da NEd	ρx	ρy	Verifica
56.1	SLD 13	0.008	1	795.7	101662.9	1	-369	642783	1		0	0	Si

Verifiche ad instabilità

Caratteristiche iniziali

Membratura principale per controllo snellezza; Calcolo di snellezze ed N critici condotti secondo gli assi principali;
Curva X: b; Curva Y: c; Svergolamento: Carico all'estradosso; Curva svergolamento: b;

Dati per instabilità attorno a x

Numero rit.	Presente	Ascissa	Campata	βx/m	Vincolo a entrambi estremi	λx/m	λVer
1	Si	0					
			1-2	1	Si	16	Si, (<200)
2	Si	105.1					

Dati per instabilità attorno a y

Numero rit.	Presente	Ascissa	Campata	βy/n	k,LT	kw,LT	Vincolo a entrambi estremi	λy/n	λVer
1	Si	0							
			1-2	1	1	1	Si	26.4	Si, (<200)
2	Si	105.1							

Verifica di stabilità a taglio anima Y §4.2.4.1.2.4 [4.2.27] NTC18

η	hw	tw	hw/tw max	Verifica
1.2	13.4	0.6	55.46	Si

Verifica di stabilità a taglio anima Y SLD §4.2.4.1.2.4 [4.2.27] NTC18

η	hw	tw	hw/tw max	Verifica
1.2	13.4	0.6	55.46	Si

Verifiche a deformabilità

Mensola X: No; Mensola Y: No.

Frecce lungo X

Ascissa freccia	Combinazione	Freccia	Luce	L/f	L/f,min	Tipo	Verifica
7	SLE RA 1	0	105.1	10000	250	Totale	Si
7	SLE RA 31	0	105.1	10000	250	Totale	Si
7	SLE RA 30	0	105.1	10000	250	Totale	Si
7	SLE RA 29	0	105.1	10000	250	Totale	Si
7	SLE RA 28	0	105.1	10000	250	Totale	Si
77.1	SLE RA 2	0	105.1	10000	350	Variabile	Si
14	SLE RA 31	0	105.1	10000	350	Variabile	Si
14	SLE RA 30	0	105.1	10000	350	Variabile	Si
17.5	SLE RA 29	0	105.1	10000	350	Variabile	Si
17.5	SLE RA 28	0	105.1	10000	350	Variabile	Si

Frecce lungo Y

Ascissa freccia	Combinazione	Freccia	Luce	L/f	L/f,min	Tipo	Verifica
52.6	SLE RA 1	0	105.1	10000	250	Totale	Si
52.6	SLE RA 31	0	105.1	10000	250	Totale	Si
52.6	SLE RA 30	0	105.1	10000	250	Totale	Si
52.6	SLE RA 29	0	105.1	10000	250	Totale	Si
52.6	SLE RA 28	0	105.1	10000	250	Totale	Si
98.1	SLE RA 2	0	105.1	10000	350	Variabile	Si
17.5	SLE RA 31	0	105.1	10000	350	Variabile	Si
17.5	SLE RA 30	0	105.1	10000	350	Variabile	Si
7	SLE RA 29	0	105.1	10000	350	Variabile	Si

Ascissa freccia	Combinazione	Freccia	Luce	L/f	L/f,min	Tipo	Verifica
7	SLE RA 28	0	105.1	10000	350	Variabile	Si

Superelemento in acciaio composto dall'asta 165

Caratteristiche del materiale

Acciaio: S275, fyk = 2750

Caratteristiche geometriche

Lunghezza: 105.1
Nodo iniziale: 66 Nodo finale: 89
Cerniera iniziale: Svincolo: M2, M3 Cerniera finale: Svincolo: M2, M3
Sovraresistenza: 0% Sisma Z: No

Caratteristiche della sezione

Sezione	Rotazione	Area	Jx	Jy	ix	iy	Wx	Wy	Wplx	Wply
HEA160	0	38.82	1674.7	615.62	6.57	3.98	220.36	76.95	245.43	117.67

Verifiche di resistenza

Verifiche a forza assiale §4.2.4.1.2.1 - §4.2.4.1.2.2 NTC18

X	Comb.	Sfruttamento	Classe	NEd	Nc,Rd	Nt,Rd	Riduzione da taglio	ρx	ρy	Verifica
105.1	SLU 86	0.012		1230		101662.9	1	0	0	Si

Verifiche a forza assiale SLD §4.2.4.1.2.1 - §4.2.4.1.2.2 NTC18

X	Comb.	Sfruttamento	Classe	NEd	Nc,Rd	Nt,Rd	Riduzione da taglio	ρx	ρy	Verifica
105.1	SLD 1	0.008		802.9		101662.9	1	0	0	Si

Verifica a taglio Y §4.2.4.1.2.4 NTC18

X	Comb.	Sfruttamento	VEd	Vc,Rd	Av	Interazione taglio-torsione	Riduzione torsione	Verifica
0	SLU 99	0.001	18.3	20038.4	13.26	Considerata	1	Si

Verifica a taglio Y SLD §4.2.4.1.2.4 NTC18

X	Comb.	Sfruttamento	VEd	Vc,Rd	Av	Interazione taglio-torsione	Riduzione torsione	Verifica
105.1	SLD 6	0.001	-14.1	19761.7	13.26	Considerata	0.99	Si

Verifica a torsione §4.2.4.1.2.5 NTC18

X	Comb.	Sfruttamento torsione	TEd	TRd	Riduzione taglio resistente	Sfruttamento taglio-torsione	τEd,totale	τRd	Verifica
49.1	SLV 5	0.092	-1347.4	14685.6	Considerata				Si

Verifica a torsione SLD §4.2.4.1.2.5 NTC18

X	Comb.	Sfruttamento torsione	TEd	TRd	Riduzione taglio resistente	Sfruttamento taglio-torsione	τEd,totale	τRd	Verifica
56.1	SLD 5	0.035	-516.4	14685.6	Considerata				Si

Verifica a presso/tenso flessione retta X §§ 4.2.4.1.2.3 - 4.2.4.1.2.6 - 4.2.4.1.2.7 - 4.2.4.1.2.8 NTC18

Verifiche eseguite utilizzando la formula conservativa (6.2) §6.2.1 EN 1993-1-1:2005.

X	Comb.	Sfruttamento	Classe	NEd	NRd	Rid. NRd da VEd	Mx,Ed	Mx,Rd	Rid. Mx,Rd da VEd	Rid. Mx,Rd da NEd	ρx	ρy	Verifica
56.1	SLU 86	0.013	1	1220.7	101662.9	1	-479	642783	1		0	0	Si

Verifica a presso/tenso flessione retta X SLD §§ 4.2.4.1.2.3 - 4.2.4.1.2.6 - 4.2.4.1.2.7 - 4.2.4.1.2.8 NTC18

Verifiche eseguite utilizzando la formula conservativa (6.2) §6.2.1 EN 1993-1-1:2005.

X	Comb.	Sfruttamento	Classe	NEd	NRd	Rid. NRd da VEd	Mx,Ed	Mx,Rd	Rid. Mx,Rd da VEd	Rid. Mx,Rd da NEd	ρx	ρy	Verifica
56.1	SLD 1	0.008	1	795.7	101662.9	1	-369	642783	1		0	0	Si

Verifiche ad instabilità

Caratteristiche iniziali

Membratura principale per controllo snellezza; Calcolo di snellezze ed N critici condotti secondo gli assi principali;
Curva X: b; Curva Y: c; Svergolamento: Carico all'estradosso; Curva svergolamento: b;

Dati per instabilità attorno a x

Numero rit.	Presente	Ascissa	Campata	βx/m	Vincolo a entrambi estremi	λx/m	λVer
1	Si	0					
			1-2	1	Si	16	Si, (<200)
2	Si	105.1					

Dati per instabilità attorno a y

Numero rit.	Presente	Ascissa	Campata	βy/n	k,LT	kw,LT	Vincolo a entrambi estremi	λy/n	λVer
1	Si	0							
			1-2	1	1	1	Si	26.4	Si, (<200)
2	Si	105.1							

Verifica di stabilità a taglio anima Y §4.2.4.1.2.4 [4.2.27] NTC18

η	hw	tw	hw/tw max	Verifica
1.2	13.4	0.6	55.46	Si

Verifica di stabilità a taglio anima Y SLD §4.2.4.1.2.4 [4.2.27] NTC18

η	hw	tw	hw/tw max	Verifica
1.2	13.4	0.6	55.46	Si

Verifiche a deformabilità

Mensola X: No; Mensola Y: No.

Frecce lungo X

Ascissa freccia	Combinazione	Freccia	Luce	L/f	L/f,min	Tipo	Verifica
7	SLE RA 1	0	105.1	10000	250	Totale	Si
7	SLE RA 31	0	105.1	10000	250	Totale	Si
7	SLE RA 30	0	105.1	10000	250	Totale	Si
7	SLE RA 29	0	105.1	10000	250	Totale	Si
7	SLE RA 28	0	105.1	10000	250	Totale	Si
73.6	SLE RA 2	0	105.1	10000	350	Variabile	Si
24.5	SLE RA 31	0	105.1	10000	350	Variabile	Si
24.5	SLE RA 30	0	105.1	10000	350	Variabile	Si
21	SLE RA 29	0	105.1	10000	350	Variabile	Si
21	SLE RA 28	0	105.1	10000	350	Variabile	Si

Frecce lungo Y

Ascissa freccia	Combinazione	Freccia	Luce	L/f	L/f,min	Tipo	Verifica
52.6	SLE RA 1	0	105.1	10000	250	Totale	Si
52.6	SLE RA 31	0	105.1	10000	250	Totale	Si
52.6	SLE RA 30	0	105.1	10000	250	Totale	Si
52.6	SLE RA 29	0	105.1	10000	250	Totale	Si
52.6	SLE RA 28	0	105.1	10000	250	Totale	Si
98.1	SLE RA 2	0	105.1	10000	350	Variabile	Si
98.1	SLE RA 31	0	105.1	10000	350	Variabile	Si
98.1	SLE RA 30	0	105.1	10000	350	Variabile	Si
10.5	SLE RA 29	0	105.1	10000	350	Variabile	Si
10.5	SLE RA 28	0	105.1	10000	350	Variabile	Si

Superelemento in acciaio composto dall'asta 166

Caratteristiche del materiale

Acciaio: S275, fyk = 2750

Caratteristiche geometriche

Lunghezza: 200
Nodo iniziale: 90 Nodo finale: 88
Cerniera iniziale: Svincolo: M2, M3 Cerniera finale: Svincolo: M2, M3
Sovraresistenza: 0% Sisma Z: No

Caratteristiche della sezione

Sezione	Rotazione	Area	Jx	Jy	ix	iy	Wx	Wy	Wplx	Wply
HEA160	0	38.82	1674.7	615.62	6.57	3.98	220.36	76.95	245.43	117.67

Verifiche di resistenza

Verifica a taglio Y §4.2.4.1.2.4 NTC18

X	Comb.	Sfruttamento	VEd	Vc,Rd	Av	Interazione taglio-torsione	Riduzione torsione	Verifica
0	SLU 130	0.02	395.7	20045.7	13.26	Considerata	1	Si

Verifica a taglio Y SLD §4.2.4.1.2.4 NTC18

X	Comb.	Sfruttamento	VEd	Vc,Rd	Av	Interazione taglio-torsione	Riduzione torsione	Verifica
0	SLD 1	0.002	30.5	20045.7	13.26	Considerata	1	Si

Verifica a flessione semplice X §§ 4.2.4.1.2.3 - 4.2.4.1.2.6 - 4.2.4.1.2.7 - 4.2.4.1.2.8 NTC18

X	Comb.	Sfruttamento	Classe	Mx,Ed	Mx,Rd	Rid. Mx,Rd da VEd	ρx	ρy	Verifica
100	SLU 131	0.031	1	-19785.8	642783.4	1	0	0	Si

Verifica a flessione semplice X SLD §§ 4.2.4.1.2.3 - 4.2.4.1.2.6 - 4.2.4.1.2.7 - 4.2.4.1.2.8 NTC18

X	Comb.	Sfruttamento	Classe	Mx,Ed	Mx,Rd	Rid. Mx,Rd da VEd	ρx	ρy	Verifica
100	SLD 3	0.002	1	-1523.6	642783.4	1	0	0	Si

Verifiche ad instabilità

Caratteristiche iniziali

Membratura principale per controllo snellezza; Calcolo di snellezze ed N critici condotti secondo gli assi principali;
Curva X: b; Curva Y: c; Svergolamento: Carico all'estradosso; Curva svergolamento: b;

Dati per instabilità attorno a x

Numero rit.	Presente	Ascissa	Campata	βx/m	Vincolo a entrambi estremi	λx/m	λVer
1	Si	0					
			1-2	1	Si	30.4	Si, (<200)
2	Si	200					

Dati per instabilità attorno a y

Numero rit.	Presente	Ascissa	Campata	βy/n	k,LT	kw,LT	Vincolo a entrambi estremi	λy/n	λVer
1	Si	0							
			1-2	1	1	1	Si	50.2	Si, (<200)
2	Si	200							

Verifica a svergolamento §4.2.4.1.3.2 NTC18

X	Comb.	Sfruttamento	Classe	Obblig.	Mx,Ed	Mb,Rd,x	χ,LT	λ adim. LT	L,LT	M,critico	Verifica
100	SLU 129	0.033	1	Si	-19785.8	598018.7	0.93	0.57	200	2075773.7	Si

Verifica a svergolamento SLD §4.2.4.1.3.2 NTC18

X	Comb.	Sfruttamento	Classe	Obblig.	Mx,Ed	Mb,Rd,x	χ,LT	λ adim. LT	L,LT	M,critico	Verifica
100	SLD 3	0.003	1	Si	-1523.6	598018.7	0.93	0.57	200	2075773.7	Si

Verifica di stabilità a taglio anima Y §4.2.4.1.2.4 [4.2.27] NTC18

η	hw	tw	hw/tw max	Verifica
1.2	13.4	0.6	55.46	Si

Verifica di stabilità a taglio anima Y SLD §4.2.4.1.2.4 [4.2.27] NTC18

η	hw	tw	hw/tw max	Verifica
1.2	13.4	0.6	55.46	Si

Verifiche a deformabilità

Mensola X: No; Mensola Y: No.

Frecce lungo X

Ascissa freccia	Combinazione	Freccia	Luce	L/f	L/f,min	Tipo	Verifica
166.7	SLE RA 1	0	200	10000	250	Totale	Si
166.7	SLE RA 31	0	200	10000	250	Totale	Si
166.7	SLE RA 30	0	200	10000	250	Totale	Si
166.7	SLE RA 29	0	200	10000	250	Totale	Si
166.7	SLE RA 28	0	200	10000	250	Totale	Si
193.3	SLE RA 2	0	200	10000	350	Variabile	Si
160	SLE RA 31	0	200	10000	350	Variabile	Si
160	SLE RA 30	0	200	10000	350	Variabile	Si
140	SLE RA 29	0	200	10000	350	Variabile	Si
140	SLE RA 28	0	200	10000	350	Variabile	Si

Frecce lungo Y

Ascissa freccia	Combinazione	Freccia	Luce	L/f	L/f,min	Tipo	Verifica
100	SLE RA 1	-0.002	200	10000	250	Totale	Si
100	SLE RA 31	-0.018	200	10000	250	Totale	Si
100	SLE RA 30	-0.018	200	10000	250	Totale	Si
100	SLE RA 29	-0.015	200	10000	250	Totale	Si
100	SLE RA 28	-0.015	200	10000	250	Totale	Si
13.3	SLE RA 2	0	200	10000	350	Variabile	Si
100	SLE RA 31	-0.016	200	10000	350	Variabile	Si
100	SLE RA 30	-0.016	200	10000	350	Variabile	Si
100	SLE RA 29	-0.013	200	10000	350	Variabile	Si
100	SLE RA 28	-0.013	200	10000	350	Variabile	Si

Superelemento in acciaio composto dall'asta 167

Caratteristiche del materiale

Acciaio: S275, fyk = 2750

Caratteristiche geometriche

Lunghezza: 200
Nodo iniziale: 89 Nodo finale: 87
Cerniera iniziale: Svincolo: M2, M3 Cerniera finale: Svincolo: M2, M3
Sovraresistenza: 0% Sisma Z: No

Caratteristiche della sezione

Sezione	Rotazione	Area	Jx	Jy	ix	iy	Wx	Wy	Wplx	Wply
HEA160	0	38.82	1674.7	615.62	6.57	3.98	220.36	76.95	245.43	117.67

Verifiche di resistenza

Verifica a taglio Y §4.2.4.1.2.4 NTC18

X	Comb.	Sfruttamento	VEd	Vc,Rd	Av	Interazione taglio-torsione	Riduzione torsione	Verifica
0	SLU 130	0.02	395.7	20045.7	13.26	Considerata	1	Si

Verifica a taglio Y SLD §4.2.4.1.2.4 NTC18

X	Comb.	Sfruttamento	VEd	Vc,Rd	Av	Interazione taglio-torsione	Riduzione torsione	Verifica
200	SLD 2	0.002	-30.5	20045.7	13.26	Considerata	1	Si

Verifica a flessione semplice X §§ 4.2.4.1.2.3 - 4.2.4.1.2.6 - 4.2.4.1.2.7 - 4.2.4.1.2.8 NTC18

X	Comb.	Sfruttamento	Classe	Mx,Ed	Mx,Rd	Rid. Mx,Rd da VEd	ρx	ρy	Verifica
100	SLU 131	0.031	1	-19785.8	642783.4	1	0	0	Si

Verifica a flessione semplice X SLD §§ 4.2.4.1.2.3 - 4.2.4.1.2.6 - 4.2.4.1.2.7 - 4.2.4.1.2.8 NTC18

X	Comb.	Sfruttamento	Classe	Mx,Ed	Mx,Rd	Rid. Mx,Rd da VEd	ρx	ρy	Verifica
100	SLD 14	0.002	1	-1523.6	642783.4	1	0	0	Si

Verifiche ad instabilità

Caratteristiche iniziali

Membratura principale per controllo snellezza; Calcolo di snellezze ed N critici condotti secondo gli assi principali;
Curva X: b; Curva Y: c; Svergolamento: Carico all'estradosso; Curva svergolamento: b;

Dati per instabilità attorno a x

Numero rit.	Presente	Ascissa	Campata	βx/m	Vincolo a entrambi estremi	λx/m	λVer
1	Si	0					
			1-2	1	Si	30.4	Si, (<200)
2	Si	200					

Dati per instabilità attorno a y

Numero rit.	Presente	Ascissa	Campata	βy/n	k,LT	kw,LT	Vincolo a entrambi estremi	λy/n	λVer
1	Si	0							
			1-2	1	1	1	Si	50.2	Si, (<200)
2	Si	200							

Verifica a svergolamento §4.2.4.1.3.2 NTC18

X	Comb.	Sfruttamento	Classe	Obblig.	Mx,Ed	Mb,Rd,x	χ,LT	λ adim. LT	L,LT	M,critico	Verifica
100	SLU 129	0.033	1	Si	-19785.8	598018.7	0.93	0.57	200	2075773.7	Si

Verifica a svergolamento SLD §4.2.4.1.3.2 NTC18

X	Comb.	Sfruttamento	Classe	Obblig.	Mx,Ed	Mb,Rd,x	χ,LT	λ adim. LT	L,LT	M,critico	Verifica
100	SLD 14	0.003	1	Si	-1523.6	598018.7	0.93	0.57	200	2075773.7	Si

Verifica di stabilità a taglio anima Y §4.2.4.1.2.4 [4.2.27] NTC18

η	hw	tw	hw/tw max	Verifica
1.2	13.4	0.6	55.46	Si

Verifica di stabilità a taglio anima Y SLD §4.2.4.1.2.4 [4.2.27] NTC18

η	hw	tw	hw/tw max	Verifica
1.2	13.4	0.6	55.46	Si

Verifiche a deformabilità

Mensola X: No; Mensola Y: No.

Frecce lungo X

Ascissa freccia	Combinazione	Freccia	Luce	L/f	L/f,min	Tipo	Verifica
166.7	SLE RA 1	0	200	10000	250	Totale	Si
160	SLE RA 31	0	200	10000	250	Totale	Si
160	SLE RA 30	0	200	10000	250	Totale	Si
166.7	SLE RA 29	0	200	10000	250	Totale	Si
166.7	SLE RA 28	0	200	10000	250	Totale	Si
193.3	SLE RA 2	0	200	10000	350	Variabile	Si
73.3	SLE RA 31	0	200	10000	350	Variabile	Si
73.3	SLE RA 30	0	200	10000	350	Variabile	Si
193.3	SLE RA 29	0	200	10000	350	Variabile	Si
193.3	SLE RA 28	0	200	10000	350	Variabile	Si

Frecce lungo Y

Ascissa freccia	Combinazione	Freccia	Luce	L/f	L/f,min	Tipo	Verifica
100	SLE RA 1	-0.002	200	10000	250	Totale	Si
100	SLE RA 31	-0.018	200	10000	250	Totale	Si
100	SLE RA 30	-0.018	200	10000	250	Totale	Si
100	SLE RA 29	-0.015	200	10000	250	Totale	Si
100	SLE RA 28	-0.015	200	10000	250	Totale	Si
13.3	SLE RA 2	0	200	10000	350	Variabile	Si
100	SLE RA 31	-0.016	200	10000	350	Variabile	Si
100	SLE RA 30	-0.016	200	10000	350	Variabile	Si
100	SLE RA 29	-0.013	200	10000	350	Variabile	Si
100	SLE RA 28	-0.013	200	10000	350	Variabile	Si

Superelemento in acciaio composto dall'asta 168

Caratteristiche del materiale

Acciaio: S275, fyk = 2750

Caratteristiche geometriche

Lunghezza: 200
Nodo iniziale: 68 Nodo finale: 64
Cerniera iniziale: Svincolo: M2, M3 Cerniera finale: Svincolo: M2, M3
Sovraresistenza: 0% Sisma Z: No

Caratteristiche della sezione

Sezione	Rotazione	Area	Jx	Jy	ix	iy	Wx	Wy	Wplx	Wply
HEA160	0	38.82	1674.7	615.62	6.57	3.98	220.36	76.95	245.43	117.67

Verifiche di resistenza

Verifiche a forza assiale §4.2.4.1.2.1 - §4.2.4.1.2.2 NTC18

X	Comb.	Sfruttamento	Classe	NEd	Nc,Rd	Nt,Rd	Riduzione da taglio	ρx	ρy	Verifica
140	SLU 98	0.017		1737.4		101662.9	1	0	0	Si

Verifiche a forza assiale SLD §4.2.4.1.2.1 - §4.2.4.1.2.2 NTC18

X	Comb.	Sfruttamento	Classe	NEd	Nc,Rd	Nt,Rd	Riduzione da taglio	ρx	ρy	Verifica
200	SLD 8	0.012		1253.2		101662.9	1	0	0	Si

Verifica a taglio Y §4.2.4.1.2.4 NTC18

X	Comb.	Sfruttamento	VEd	Vc,Rd	Av	Interazione taglio-torsione	Riduzione torsione	Verifica
0	SLU 132	0.014	276.3	20045.7	13.26	Considerata	1	Si

Verifica a taglio Y SLD §4.2.4.1.2.4 NTC18

X	Comb.	Sfruttamento	VEd	Vc,Rd	Av	Interazione taglio-torsione	Riduzione torsione	Verifica
200	SLD 16	0.002	-30.5	20045.7	13.26	Considerata	1	Si

Verifica a presso/tenso flessione retta X §§ 4.2.4.1.2.3 - 4.2.4.1.2.6 - 4.2.4.1.2.7 - 4.2.4.1.2.8 NTC18

Verifiche eseguite utilizzando la formula conservativa (6.2) §6.2.1 EN 1993-1-1:2005.

X	Comb.	Sfruttamento	Classe	NEd	NRd	Rid. NRd da VEd	Mx,Ed	Mx,Rd	Rid. Mx,Rd da VEd	Rid. Mx,Rd da NEd	ρx	ρy	Verifica
100	SLU 131	0.04	1	1737.4	101662.9	1	-14782	642783	1		0	0	Si

Verifica a presso/tenso flessione retta X SLD §§ 4.2.4.1.2.3 - 4.2.4.1.2.6 - 4.2.4.1.2.7 - 4.2.4.1.2.8 NTC18

Verifiche eseguite utilizzando la formula conservativa (6.2) §6.2.1 EN 1993-1-1:2005.

X	Comb.	Sfruttamento	Classe	NEd	NRd	Rid. NRd da VEd	Mx,Ed	Mx,Rd	Rid. Mx,Rd da VEd	Rid. Mx,Rd da NEd	ρx	ρy	Verifica
100	SLD 8	0.015	1	1253.2	101662.9	1	-1524	642783	1		0	0	Si

Verifiche ad instabilità

Caratteristiche iniziali

Membratura principale per controllo snellezza; Calcolo di snellezze ed N critici condotti secondo gli assi principali;
Curva X: b; Curva Y: c; Svergolamento: Carico all'estradosso; Curva svergolamento: b;

Dati per instabilità attorno a x

Numero rit.	Presente	Ascissa	Campata	βx/m	Vincolo a entrambi estremi	λx/m	λVer
1	Si	0					
			1-2	1	Si	30.4	Si, (<200)
2	Si	200					

Dati per instabilità attorno a y

Numero rit.	Presente	Ascissa	Campata	βy/n	k,LT	kw,LT	Vincolo a entrambi estremi	λy/n	λVer
1	Si	0							
			1-2	1	1	1	Si	50.2	Si, (<200)
2	Si	200							

Verifica a svergolamento con trazione §4.2.4.1.3.2 NTC18 - §5.5.3 ENV 1993-1-1:1994

X	Comb.	Sfruttamento	Classe	Obblig.	NEd	Mx,Ed	Mx,Eff,Ed	Mb,Rd,x	χ,LT	λ adim. LT	L,LT	M,critico	Verifica
100	SLU 31	0.015	1	Si	1359.3	-14324.8	-8923.2	598018.7	0.93	0.57	200	2075773.7	Si

Verifica di stabilità a taglio anima Y §4.2.4.1.2.4 [4.2.27] NTC18

η	hw	tw	hw/tw max	Verifica
1.2	13.4	0.6	55.46	Si

Verifica di stabilità a taglio anima Y SLD §4.2.4.1.2.4 [4.2.27] NTC18

η	hw	tw	hw/tw max	Verifica
1.2	13.4	0.6	55.46	Si

Verifiche a deformabilità

Mensola X: No; Mensola Y: No.

Frecce lungo X

Ascissa freccia	Combinazione	Freccia	Luce	L/f	L/f,min	Tipo	Verifica
153.3	SLE RA 1	0	200	10000	250	Totale	Si
153.3	SLE RA 31	0	200	10000	250	Totale	Si
153.3	SLE RA 30	0	200	10000	250	Totale	Si
153.3	SLE RA 29	0	200	10000	250	Totale	Si
153.3	SLE RA 28	0	200	10000	250	Totale	Si
180	SLE RA 2	0	200	10000	350	Variabile	Si
166.7	SLE RA 31	0	200	10000	350	Variabile	Si
166.7	SLE RA 30	0	200	10000	350	Variabile	Si
166.7	SLE RA 29	0	200	10000	350	Variabile	Si
166.7	SLE RA 28	0	200	10000	350	Variabile	Si

Frecce lungo Y

Ascissa freccia	Combinazione	Freccia	Luce	L/f	L/f,min	Tipo	Verifica
100	SLE RA 1	-0.002	200	10000	250	Totale	Si
100	SLE RA 31	-0.013	200	10000	250	Totale	Si
100	SLE RA 30	-0.013	200	10000	250	Totale	Si
100	SLE RA 29	-0.011	200	10000	250	Totale	Si
100	SLE RA 28	-0.011	200	10000	250	Totale	Si
13.3	SLE RA 2	0	200	10000	350	Variabile	Si
100	SLE RA 31	-0.011	200	10000	350	Variabile	Si
100	SLE RA 30	-0.011	200	10000	350	Variabile	Si

Ascissa freccia	Combinazione	Freccia	Luce	L/f	L/f,min	Tipo	Verifica
100	SLE RA 29	-0.009	200	10000	350	Variabile	Si
100	SLE RA 28	-0.009	200	10000	350	Variabile	Si

Superelemento in acciaio composto dall'asta 169

Caratteristiche del materiale

Acciaio: S275, fyk = 2750

Caratteristiche geometriche

Lunghezza: 200
Nodo iniziale: 65 Nodo finale: 61
Cerniera iniziale: Svincolo: M2, M3 Cerniera finale: Svincolo: M2, M3
Sovraresistenza: 0% Sisma Z: No

Caratteristiche della sezione

Sezione	Rotazione	Area	Jx	Jy	ix	iy	Wx	Wy	Wplx	Wply
HEA160	0	38.82	1674.7	615.62	6.57	3.98	220.36	76.95	245.43	117.67

Verifiche di resistenza

Verifiche a forza assiale §4.2.4.1.2.1 - §4.2.4.1.2.2 NTC18

X	Comb.	Sfruttamento	Classe	NEd	Nc,Rd	Nt,Rd	Riduzione da taglio	ρx	ρy	Verifica
26.7	SLU 131	0.017		1739.6		101662.9	1	0	0	Si

Verifiche a forza assiale SLD §4.2.4.1.2.1 - §4.2.4.1.2.2 NTC18

X	Comb.	Sfruttamento	Classe	NEd	Nc,Rd	Nt,Rd	Riduzione da taglio	ρx	ρy	Verifica
200	SLD 11	0.012		1253.2		101662.9	1	0	0	Si

Verifica a taglio Y §4.2.4.1.2.4 NTC18

X	Comb.	Sfruttamento	VEd	Vc,Rd	Av	Interazione taglio-torsione	Riduzione torsione	Verifica
200	SLU 99	0.014	-276.4	20045.7	13.26	Considerata	1	Si

Verifica a taglio Y SLD §4.2.4.1.2.4 NTC18

X	Comb.	Sfruttamento	VEd	Vc,Rd	Av	Interazione taglio-torsione	Riduzione torsione	Verifica
200	SLD 2	0.002	-30.5	20045.7	13.26	Considerata	1	Si

Verifica a presso/tenso flessione retta X §§ 4.2.4.1.2.3 - 4.2.4.1.2.6 - 4.2.4.1.2.7 - 4.2.4.1.2.8 NTC18

Verifiche eseguite utilizzando la formula conservativa (6.2) §6.2.1 EN 1993-1-1:2005.

X	Comb.	Sfruttamento	Classe	NEd	NRd	Rid. NRd da VEd	Mx,Ed	Mx,Rd	Rid. Mx,Rd da VEd	Rid. Mx,Rd da NEd	ρx	ρy	Verifica
100	SLU 98	0.04	1	1739.6	101662.9	1	-14785	642783	1		0	0	Si

Verifica a presso/tenso flessione retta X SLD §§ 4.2.4.1.2.3 - 4.2.4.1.2.6 - 4.2.4.1.2.7 - 4.2.4.1.2.8 NTC18

Verifiche eseguite utilizzando la formula conservativa (6.2) §6.2.1 EN 1993-1-1:2005.

X	Comb.	Sfruttamento	Classe	NEd	NRd	Rid. NRd da VEd	Mx,Ed	Mx,Rd	Rid. Mx,Rd da VEd	Rid. Mx,Rd da NEd	ρx	ρy	Verifica
100	SLD 12	0.015	1	1253.2	101662.9	1	-1524	642783	1		0	0	Si

Verifiche ad instabilità

Caratteristiche iniziali

Membratura principale per controllo snellezza; Calcolo di snellezze ed N critici condotti secondo gli assi principali;
Curva X: b; Curva Y: c; Svergolamento: Carico all'estradosso; Curva svergolamento: b;

Dati per instabilità attorno a x

Numero rit.	Presente	Ascissa	Campata	βx/m	Vincolo a entrambi estremi	λx/m	λVer
1	Si	0					
			1-2	1	Si	30.4	Si, (<200)
2	Si	200					

Dati per instabilità attorno a y

Numero rit.	Presente	Ascissa	Campata	βy/n	k,LT	kw,LT	Vincolo a entrambi estremi	λy/n	λVer
1	Si	0							
			1-2	1	1	1	Si	50.2	Si, (<200)
2	Si	200							

Verifica a svergolamento con trazione §4.2.4.1.3.2 NTC18 - §5.5.3 ENV 1993-1-1:1994

X	Comb.	Sfruttamento	Classe	Obblig.	NEd	Mx,Ed	Mx,Eff,Ed	Mb,Rd,x	χ,LT	λ adim. LT	L,LT	M,critico	Verifica
100	SLU 64	0.015	1	Si	1361.5	-14327.8	-8917.5	598018.7	0.93	0.57	200	2075773.7	Si

Verifica di stabilità a taglio anima Y §4.2.4.1.2.4 [4.2.27] NTC18

η	hw	tw	hw/tw max	Verifica
1.2	13.4	0.6	55.46	Si

Verifica di stabilità a taglio anima Y SLD §4.2.4.1.2.4 [4.2.27] NTC18

η	hw	tw	hw/tw max	Verifica
1.2	13.4	0.6	55.46	Si

Verifiche a deformabilità

Mensola X: No; Mensola Y: No.

Frecce lungo X

Ascissa freccia	Combinazione	Freccia	Luce	L/f	L/f,min	Tipo	Verifica
153.3	SLE RA 1	0	200	10000	250	Totale	Si
166.7	SLE RA 31	0	200	10000	250	Totale	Si
166.7	SLE RA 30	0	200	10000	250	Totale	Si
153.3	SLE RA 29	0	200	10000	250	Totale	Si
153.3	SLE RA 28	0	200	10000	250	Totale	Si
180	SLE RA 2	0	200	10000	350	Variabile	Si
160	SLE RA 31	0	200	10000	350	Variabile	Si
160	SLE RA 30	0	200	10000	350	Variabile	Si
160	SLE RA 29	0	200	10000	350	Variabile	Si
160	SLE RA 28	0	200	10000	350	Variabile	Si

Frecce lungo Y

Ascissa freccia	Combinazione	Freccia	Luce	L/f	L/f,min	Tipo	Verifica
100	SLE RA 1	-0.002	200	10000	250	Totale	Si
100	SLE RA 31	-0.013	200	10000	250	Totale	Si
100	SLE RA 30	-0.013	200	10000	250	Totale	Si
100	SLE RA 29	-0.011	200	10000	250	Totale	Si
100	SLE RA 28	-0.011	200	10000	250	Totale	Si
13.3	SLE RA 2	0	200	10000	350	Variabile	Si
100	SLE RA 31	-0.011	200	10000	350	Variabile	Si
100	SLE RA 30	-0.011	200	10000	350	Variabile	Si
100	SLE RA 29	-0.009	200	10000	350	Variabile	Si
100	SLE RA 28	-0.009	200	10000	350	Variabile	Si

Superelemento in acciaio composto dall'asta 170

Caratteristiche del materiale

Acciaio: S275, fyk = 2750

Caratteristiche geometriche

Lunghezza: 200
Nodo iniziale: 112 Nodo finale: 110
Cerniera iniziale: Svincolo: M2, M3 Cerniera finale: Svincolo: M2, M3
Sovraresistenza: 0% Sisma Z: No

Caratteristiche della sezione

Sezione	Rotazione	Area	Jx	Jy	ix	iy	Wx	Wy	Wplx	Wply
HEA160	0	38.82	1674.7	615.62	6.57	3.98	220.36	76.95	245.43	117.67

Verifiche di resistenza

Verifiche a forza assiale §4.2.4.1.2.1 - §4.2.4.1.2.2 NTC18

X	Comb.	Sfruttamento	Classe	NEd	Nc,Rd	Nt,Rd	Riduzione da taglio	ρx	ρy	Verifica
200	SLV 8	0.001	1	-59.9	101662.9		1	0	0	Si

Verifica a taglio Y §4.2.4.1.2.4 NTC18

X	Comb.	Sfruttamento	VEd	Vc,Rd	Av	Interazione taglio-torsione	Riduzione torsione	Verifica
0	SLU 132	0.039	777.3	20038.2	13.26	Considerata	1	Si

Verifica a taglio Y SLD §4.2.4.1.2.4 NTC18

X	Comb.	Sfruttamento	VEd	Vc,Rd	Av	Interazione taglio-torsione	Riduzione torsione	Verifica
200	SLD 16	0.002	-30.5	20045.7	13.26	Considerata	1	Si

Verifica a torsione §4.2.4.1.2.5 NTC18

X	Comb.	Sfruttamento torsione	TEd	TRd	Riduzione taglio resistente	Sfruttamento taglio-torsione	τEd,totale	τRd	Verifica
200	SLU 132	0.001	13.7	14685.6	Considerata				Si

Verifica a flessione semplice X §§ 4.2.4.1.2.3 - 4.2.4.1.2.6 - 4.2.4.1.2.7 - 4.2.4.1.2.8 NTC18

X	Comb.	Sfruttamento	Classe	Mx,Ed	Mx,Rd	Rid. Mx,Rd da VEd	ρx	ρy	Verifica
100	SLU 131	0.06	1	-38808.4	642783.4	1	0	0	Si

Verifica a flessione semplice X SLD §§ 4.2.4.1.2.3 - 4.2.4.1.2.6 - 4.2.4.1.2.7 - 4.2.4.1.2.8 NTC18

X	Comb.	Sfruttamento	Classe	Mx,Ed	Mx,Rd	Rid. Mx,Rd da VEd	ρx	ρy	Verifica
100	SLD 3	0.002	1	-1523.6	642783.4	1	0	0	Si

Verifica a presso/tenso flessione retta X §§ 4.2.4.1.2.3 - 4.2.4.1.2.6 - 4.2.4.1.2.7 - 4.2.4.1.2.8 NTC18

Verifiche eseguite utilizzando la formula conservativa (6.2) §6.2.1 EN 1993-1-1:2005.

X	Comb.	Sfruttamento	Classe	NEd	NRd	Rid. NRd da VEd	Mx,Ed	Mx,Rd	Rid. Mx,Rd da VEd	Rid. Mx,Rd da NEd	ρx	ρy	Verifica
100	SLV 7	0.003	1	-59.9	101662.9	1	-1524	642783	1		0	0	Si

Verifiche ad instabilità

Caratteristiche iniziali

Membratura principale per controllo snellezza; Calcolo di snellezze ed N critici condotti secondo gli assi principali;
Curva X: b; Curva Y: c; Svergolamento: Carico all'estradosso; Curva svergolamento: b;

Dati per instabilità attorno a x

Numero rit.	Presente	Ascissa	Campata	βx/m	Vincolo a entrambi estremi	λx/m	λVer
1	Si	0					
			1-2	1	Si	30.4	Si, (<200)
2	Si	200					

Dati per instabilità attorno a y

Numero rit.	Presente	Ascissa	Campata	βy/n	k,LT	kw,LT	Vincolo a entrambi estremi	λy/n	λVer
1	Si	0							
			1-2	1	1	1	Si	50.2	Si, (<200)
2	Si	200							

Verifica a svergolamento §4.2.4.1.3.2 NTC18

X	Comb.	Sfruttamento	Classe	Obblig.	Mx,Ed	Mb,Rd,x	χ,LT	λ adim. LT	L,LT	M,critico	Verifica
100	SLU 131	0.065	1	Si	-38808.4	598018.7	0.93	0.57	200	2075773.7	Si

Verifica a svergolamento SLD §4.2.4.1.3.2 NTC18

X	Comb.	Sfruttamento	Classe	Obblig.	Mx,Ed	Mb,Rd,x	χ,LT	λ adim. LT	L,LT	M,critico	Verifica
100	SLD 3	0.003	1	Si	-1523.6	598018.7	0.93	0.57	200	2075773.7	Si

Verifica a svergolamento con trazione §4.2.4.1.3.2 NTC18 - §5.5.3 ENV 1993-1-1:1994

X	Comb.	Sfruttamento	Classe	Obblig.	NEd	Mx,Ed	Mx,Eff,Ed	Mb,Rd,x	χ,LT	λ adim. LT	L,LT	M,critico	Verifica
100	SLV 6	0.002	1	Si	52.7	-1523.6	-1314.3	598018.7	0.93	0.57	200	2075773.7	Si

Verifica di stabilità per pressoflessione §C.4.2.4.1.3.3.2 NTC18

X	Comb.	Sfruttamento	Classe	NEd	NRk	Mx,Ed max	Mx,Rk	My,Ed max	My,Rk	χ,x	χ,y	kxx	kxy	kyx	kyy	χ,LT	Verifica
0	SLV 7	0.003	1	-59.9	106746.1	1523.6	674922.6	0	323595.1	0.945	0.798	0.95	0.36	1	0.6	0.93	Si

Verifica di stabilità a taglio anima Y §4.2.4.1.2.4 [4.2.27] NTC18

η	hw	tw	hw/tw max	Verifica
1.2	13.4	0.6	55.46	Si

Verifica di stabilità a taglio anima Y SLD §4.2.4.1.2.4 [4.2.27] NTC18

η	hw	tw	hw/tw max	Verifica
1.2	13.4	0.6	55.46	Si

Verifiche a deformabilità

Mensola X: No; Mensola Y: No.

Frecce lungo X

Ascissa freccia	Combinazione	Freccia	Luce	L/f	L/f,min	Tipo	Verifica
6.7	SLE RA 1	0	200	10000	250	Totale	Si
6.7	SLE RA 31	0	200	10000	250	Totale	Si
6.7	SLE RA 30	0	200	10000	250	Totale	Si
6.7	SLE RA 29	0	200	10000	250	Totale	Si
6.7	SLE RA 28	0	200	10000	250	Totale	Si
6.7	SLE RA 2	0	200	10000	350	Variabile	Si
53.3	SLE RA 31	0	200	10000	350	Variabile	Si
53.3	SLE RA 30	0	200	10000	350	Variabile	Si
53.3	SLE RA 29	0	200	10000	350	Variabile	Si
53.3	SLE RA 28	0	200	10000	350	Variabile	Si

Frecce lungo Y

Ascissa freccia	Combinazione	Freccia	Luce	L/f	L/f,min	Tipo	Verifica
100	SLE RA 32	-0.035	200	5780.2	250	Totale	Si
100	SLE RA 33	-0.035	200	5780.2	250	Totale	Si
100	SLE RA 24	-0.031	200	6516.8	250	Totale	Si
100	SLE RA 25	-0.031	200	6516.8	250	Totale	Si
100	SLE RA 30	-0.031	200	6537.6	250	Totale	Si
100	SLE RA 32	-0.033	200	6138.9	350	Variabile	Si
100	SLE RA 33	-0.033	200	6138.9	350	Variabile	Si
100	SLE RA 24	-0.029	200	6976.4	350	Variabile	Si
100	SLE RA 25	-0.029	200	6976.4	350	Variabile	Si
100	SLE RA 30	-0.029	200	7000.2	350	Variabile	Si

Superelemento in acciaio composto dall'asta 171

Caratteristiche del materiale

Acciaio: S275, fyk = 2750

Caratteristiche geometriche

Lunghezza: 200
Nodo iniziale: 111 Nodo finale: 109
Cerniera iniziale: Svincolo: M2, M3 Cerniera finale: Svincolo: M2, M3
Sovraresistenza: 0% Sisma Z: No

Caratteristiche della sezione

Sezione	Rotazione	Area	Jx	Jy	ix	iy	Wx	Wy	Wplx	Wply
HEA160	0	38.82	1674.7	615.62	6.57	3.98	220.36	76.95	245.43	117.67

Verifiche di resistenza

Verifiche a forza assiale §4.2.4.1.2.1 - §4.2.4.1.2.2 NTC18

X	Comb.	Sfruttamento	Classe	NEd	Nc,Rd	Nt,Rd	Riduzione da taglio	ρx	ρy	Verifica
200	SLV 12	0.001	1	-59.9	101662.9		1	0	0	Si

Verifica a taglio Y §4.2.4.1.2.4 NTC18

X	Comb.	Sfruttamento	VEd	Vc,Rd	Av	Interazione taglio-torsione	Riduzione torsione	Verifica
200	SLU 132	0.039	-786.3	20038.1	13.26	Considerata	1	Si

Verifica a taglio Y SLD §4.2.4.1.2.4 NTC18

X	Comb.	Sfruttamento	VEd	Vc,Rd	Av	Interazione taglio-torsione	Riduzione torsione	Verifica
200	SLD 2	0.002	-30.5	20045.7	13.26	Considerata	1	Si

Verifica a torsione §4.2.4.1.2.5 NTC18

X	Comb.	Sfruttamento torsione	TEd	TRd	Riduzione taglio resistente	Sfruttamento taglio-torsione	τEd,totale	τRd	Verifica
200	SLU 132	0.001	-13.8	14685.6	Considerata				Si

Verifica a flessione semplice X §§ 4.2.4.1.2.3 - 4.2.4.1.2.6 - 4.2.4.1.2.7 - 4.2.4.1.2.8 NTC18

X	Comb.	Sfruttamento	Classe	Mx,Ed	Mx,Rd	Rid. Mx,Rd da VEd	ρx	ρy	Verifica
100	SLU 99	0.061	1	-39314.5	642783.4	1	0	0	Si

Verifica a flessione semplice X SLD §§ 4.2.4.1.2.3 - 4.2.4.1.2.6 - 4.2.4.1.2.7 - 4.2.4.1.2.8 NTC18

X	Comb.	Sfruttamento	Classe	Mx,Ed	Mx,Rd	Rid. Mx,Rd da VEd	ρx	ρy	Verifica
100	SLD 14	0.002	1	-1523.6	642783.4	1	0	0	Si

Verifica a presso/tenso flessione retta X §§ 4.2.4.1.2.3 - 4.2.4.1.2.6 - 4.2.4.1.2.7 - 4.2.4.1.2.8 NTC18

Verifiche eseguite utilizzando la formula conservativa (6.2) §6.2.1 EN 1993-1-1:2005.

X	Comb.	Sfruttamento	Classe	NEd	NRd	Rid. NRd da VEd	Mx,Ed	Mx,Rd	Rid. Mx,Rd da VEd	Rid. Mx,Rd da NEd	ρx	ρy	Verifica
100	SLV 12	0.003	1	-59.9	101662.9	1	-1524	642783	1		0	0	Si

Verifiche ad instabilità

Caratteristiche iniziali

Membratura principale per controllo snellezza; Calcolo di snellezze ed N critici condotti secondo gli assi principali;
Curva X: b; Curva Y: c; Svergolamento: Carico all'estradosso; Curva svergolamento: b;

Dati per instabilità attorno a x

Numero rit.	Presente	Ascissa	Campata	βx/m	Vincolo a entrambi estremi	λx/m	λVer
1	Si	0					
			1-2	1	Si	30.4	Si, (<200)
2	Si	200					

Dati per instabilità attorno a y

Numero rit.	Presente	Ascissa	Campata	βy/n	k,LT	kw,LT	Vincolo a entrambi estremi	λy/n	λVer
1	Si	0							
			1-2	1	1	1	Si	50.2	Si, (<200)
2	Si	200							

Verifica a svergolamento §4.2.4.1.3.2 NTC18

X	Comb.	Sfruttamento	Classe	Obblig.	Mx,Ed	Mb,Rd,x	χ,LT	λ adim. LT	L,LT	M,critico	Verifica
100	SLU 99	0.066	1	Si	-39314.5	598018.7	0.93	0.57	200	2075773.7	Si

Verifica a svergolamento SLD §4.2.4.1.3.2 NTC18

X	Comb.	Sfruttamento	Classe	Obblig.	Mx,Ed	Mb,Rd,x	χ,LT	λ adim. LT	L,LT	M,critico	Verifica
100	SLD 14	0.003	1	Si	-1523.6	598018.7	0.93	0.57	200	2075773.7	Si

Verifica a svergolamento con trazione §4.2.4.1.3.2 NTC18 - §5.5.3 ENV 1993-1-1:1994

X	Comb.	Sfruttamento	Classe	Obblig.	NEd	Mx,Ed	Mx,Eff,Ed	Mb,Rd,x	χ,LT	λ adim. LT	L,LT	M,critico	Verifica
100	SLV 9	0.002	1	Si	52.7	-1523.6	-1314.3	598018.7	0.93	0.57	200	2075773.7	Si

Verifica di stabilità per pressoflessione §C.4.2.4.1.3.3.2 NTC18

X	Comb.	Sfruttamento	Classe	NEd	NRk	Mx,Ed max	Mx,Rk	My,Ed max	My,Rk	χ,x	χ,y	kxx	kxy	kyx	kyy	χ,LT	Verifica
200	SLV 12	0.003	1	-59.9	106746.1	1523.6	674922.6	0	323595.1	0.945	0.798	0.95	0.36	1	0.6	0.93	Si

Verifica di stabilità a taglio anima Y §4.2.4.1.2.4 [4.2.27] NTC18

η	hw	tw	hw/tw max	Verifica
1.2	13.4	0.6	55.46	Si

Verifica di stabilità a taglio anima Y SLD §4.2.4.1.2.4 [4.2.27] NTC18

η	hw	tw	hw/tw max	Verifica
1.2	13.4	0.6	55.46	Si

Verifiche a deformabilità

Mensola X: No; Mensola Y: No.

Frecce lungo X

Ascissa freccia	Combinazione	Freccia	Luce	L/f	L/f,min	Tipo	Verifica
6.7	SLE RA 1	0	200	10000	250	Totale	Si

Ascissa freccia	Combinazione	Freccia	Luce	L/f	L/f,min	Tipo	Verifica
6.7	SLE RA 31	0	200	10000	250	Totale	Si
6.7	SLE RA 30	0	200	10000	250	Totale	Si
6.7	SLE RA 29	0	200	10000	250	Totale	Si
6.7	SLE RA 28	0	200	10000	250	Totale	Si
6.7	SLE RA 2	0	200	10000	350	Variabile	Si
160	SLE RA 31	0	200	10000	350	Variabile	Si
160	SLE RA 30	0	200	10000	350	Variabile	Si
113.3	SLE RA 29	0	200	10000	350	Variabile	Si
113.3	SLE RA 28	0	200	10000	350	Variabile	Si

Frecce lungo Y

Ascissa freccia	Combinazione	Freccia	Luce	L/f	L/f,min	Tipo	Verifica
100	SLE RA 32	-0.035	200	5706.3	250	Totale	Si
100	SLE RA 33	-0.035	200	5706.3	250	Totale	Si
100	SLE RA 30	-0.031	200	6443.3	250	Totale	Si
100	SLE RA 31	-0.031	200	6443.3	250	Totale	Si
100	SLE RA 24	-0.031	200	6450.1	250	Totale	Si
100	SLE RA 32	-0.033	200	6055.7	350	Variabile	Si
100	SLE RA 33	-0.033	200	6055.7	350	Variabile	Si
100	SLE RA 30	-0.029	200	6892.2	350	Variabile	Si
100	SLE RA 31	-0.029	200	6892.2	350	Variabile	Si
100	SLE RA 24	-0.029	200	6899.9	350	Variabile	Si

Superelemento in acciaio composto dall'asta 172

Caratteristiche del materiale

Acciaio: S275, fyk = 2750

Caratteristiche geometriche

Lunghezza: 200
Nodo iniziale: 123 Nodo finale: 122
Cerniera iniziale: Svincolo: M2, M3 Cerniera finale: Svincolo: M2, M3
Sovraresistenza: 0% Sisma Z: No

Caratteristiche della sezione

Sezione	Rotazione	Area	Jx	Jy	ix	iy	Wx	Wy	Wplx	Wply
HEA160	0	38.82	1674.7	615.62	6.57	3.98	220.36	76.95	245.43	117.67

Verifiche di resistenza

Verifiche a forza assiale §4.2.4.1.2.1 - §4.2.4.1.2.2 NTC18

X	Comb.	Sfruttamento	Classe	NEd	Nc,Rd	Nt,Rd	Riduzione da taglio	ρx	ρy	Verifica
200	SLV 8	0.003		276.5		101662.9	1	0	0	Si

Verifiche a forza assiale SLD §4.2.4.1.2.1 - §4.2.4.1.2.2 NTC18

X	Comb.	Sfruttamento	Classe	NEd	Nc,Rd	Nt,Rd	Riduzione da taglio	ρx	ρy	Verifica
200	SLD 8	0.001		105.3		101662.9	1	0	0	Si

Verifica a taglio Y §4.2.4.1.2.4 NTC18

X	Comb.	Sfruttamento	VEd	Vc,Rd	Av	Interazione taglio-torsione	Riduzione torsione	Verifica
0	SLU 131	0.059	1174.7	20045.7	13.26	Considerata	1	Si

Verifica a taglio Y SLD §4.2.4.1.2.4 NTC18

X	Comb.	Sfruttamento	VEd	Vc,Rd	Av	Interazione taglio-torsione	Riduzione torsione	Verifica
0	SLD 1	0.002	30.5	20045.7	13.26	Considerata	1	Si

Verifica a flessione semplice X §§ 4.2.4.1.2.3 - 4.2.4.1.2.6 - 4.2.4.1.2.7 - 4.2.4.1.2.8 NTC18

X	Comb.	Sfruttamento	Classe	Mx,Ed	Mx,Rd	Rid. Mx,Rd da VEd	ρx	ρy	Verifica
100	SLU 131	0.091	1	-58735.3	642783.4	1	0	0	Si

Verifica a flessione semplice X SLD §§ 4.2.4.1.2.3 - 4.2.4.1.2.6 - 4.2.4.1.2.7 - 4.2.4.1.2.8 NTC18

X	Comb.	Sfruttamento	Classe	Mx,Ed	Mx,Rd	Rid. Mx,Rd da VEd	ρx	ρy	Verifica
100	SLD 4	0.002	1	-1523.6	642783.4	1	0	0	Si

Verifica a presso/tenso flessione retta X §§ 4.2.4.1.2.3 - 4.2.4.1.2.6 - 4.2.4.1.2.7 - 4.2.4.1.2.8 NTC18

Verifiche eseguite utilizzando la formula conservativa (6.2) §6.2.1 EN 1993-1-1:2005.

X	Comb.	Sfruttamento	Classe	NEd	NRd	Rid. NRd da VEd	Mx,Ed	Mx,Rd	Rid. Mx,Rd da VEd	Rid. Mx,Rd da NEd	ρx	ρy	Verifica
100	SLV 8	0.005	1	276.5	101662.9	1	-1524	642783	1		0	0	Si

Verifica a presso/tenso flessione retta X SLD §§ 4.2.4.1.2.3 - 4.2.4.1.2.6 - 4.2.4.1.2.7 - 4.2.4.1.2.8 NTC18

Verifiche eseguite utilizzando la formula conservativa (6.2) §6.2.1 EN 1993-1-1:2005.

X	Comb.	Sfruttamento	Classe	NEd	NRd	Rid. NRd da VEd	Mx,Ed	Mx,Rd	Rid. Mx,Rd da VEd	Rid. Mx,Rd da NEd	ρx	ρy	Verifica
100	SLD 8	0.003	1	105.3	101662.9	1	-1524	642783	1		0	0	Si

Verifiche ad instabilità

Caratteristiche iniziali

Membratura principale per controllo snellezza; Calcolo di snellezze ed N critici condotti secondo gli assi principali;

Curva X: b; Curva Y: c; Svergolamento: Carico all'estradosso; Curva svergolamento: b;

Dati per instabilità attorno a x

Numero rit.	Presente	Ascissa	Campata	βx/m	Vincolo a entrambi estremi	λx/m	λVer
1	Si	0					
			1-2	1	Si	30.4	Si, (<200)
2	Si	200					

Dati per instabilità attorno a y

Numero rit.	Presente	Ascissa	Campata	βy/n	k,LT	kw,LT	Vincolo a entrambi estremi	λy/n	λVer
1	Si	0							
			1-2	1	1	1	Si	50.2	Si, (<200)
2	Si	200							

Verifica a svergolamento §4.2.4.1.3.2 NTC18

X	Comb.	Sfruttamento	Classe	Obblig.	Mx,Ed	Mb,Rd,x	χ,LT	λ adim. LT	L,LT	M,critico	Verifica
100	SLU 131	0.098	1	Si	-58735.3	598018.7	0.93	0.57	200	2075773.7	Si

Verifica a svergolamento SLD §4.2.4.1.3.2 NTC18

X	Comb.	Sfruttamento	Classe	Obblig.	Mx,Ed	Mb,Rd,x	χ,LT	λ adim. LT	L,LT	M,critico	Verifica
100	SLD 4	0.003	1	Si	-1523.6	598018.7	0.93	0.57	200	2075773.7	Si

Verifica a svergolamento con trazione §4.2.4.1.3.2 NTC18 - §5.5.3 ENV 1993-1-1:1994

X	Comb.	Sfruttamento	Classe	Obblig.	NEd	Mx,Ed	Mx,Eff,Ed	Mb,Rd,x	χ,LT	λ adim. LT	L,LT	M,critico	Verifica
100	SLV 15	0.002	1	Si	83.4	-1523.6	-1191.9	598018.7	0.93	0.57	200	2075773.7	Si

Verifica a svergolamento con trazione SLD §4.2.4.1.3.2 NTC18 - §5.5.3 ENV 1993-1-1:1994

X	Comb.	Sfruttamento	Classe	Obblig.	NEd	Mx,Ed	Mx,Eff,Ed	Mb,Rd,x	χ,LT	λ adim. LT	L,LT	M,critico	Verifica
100	SLD 11	0.002	1	Si	105.3	-1523.6	-1105.2	598018.7	0.93	0.57	200	2075773.7	Si

Verifica di stabilità per pressoflessione §C.4.2.4.1.3.3.2 NTC18

X	Comb.	Sfruttamento	Classe	NEd	NRk	Mx,Ed max	Mx,Rk	My,Ed max	My,Rk	χ,x	χ,y	kxx	kxy	kyx	kyy	χ,LT	Verifica
186.7	SLV 10	0.006	1	-275.2	106746.1	1523.6	674922.6	0	323595.1	0.945	0.798	0.95	0.361	1	0.601	0.93	Si

Verifica di stabilità per pressoflessione SLD §C.4.2.4.1.3.3.2 NTC18

X	Comb.	Sfruttamento	Classe	NEd	NRk	Mx,Ed max	Mx,Rk	My,Ed max	My,Rk	χ,x	χ,y	kxx	kxy	kyx	kyy	χ,LT	Verifica
200	SLD 10	0.004	1	-103.9	106746.1	1523.6	674922.6	0	323595.1	0.945	0.798	0.95	0.36	1	0.6	0.93	Si

Verifica di stabilità a taglio anima Y §4.2.4.1.2.4 [4.2.27] NTC18

η	hw	tw	hw/tw max	Verifica
1.2	13.4	0.6	55.46	Si

Verifica di stabilità a taglio anima Y SLD §4.2.4.1.2.4 [4.2.27] NTC18

η	hw	tw	hw/tw max	Verifica
1.2	13.4	0.6	55.46	Si

Verifiche a deformabilità

Mensola X: No; Mensola Y: No.

Frecce lungo X

Ascissa freccia	Combinazione	Freccia	Luce	L/f	L/f,min	Tipo	Verifica
100	SLE RA 1	0	200	10000	250	Totale	Si
6.7	SLE RA 31	0	200	10000	250	Totale	Si
6.7	SLE RA 30	0	200	10000	250	Totale	Si
6.7	SLE RA 29	0	200	10000	250	Totale	Si
6.7	SLE RA 28	0	200	10000	250	Totale	Si
40	SLE RA 2	0	200	10000	350	Variabile	Si
6.7	SLE RA 31	0	200	10000	350	Variabile	Si
6.7	SLE RA 30	0	200	10000	350	Variabile	Si
6.7	SLE RA 29	0	200	10000	350	Variabile	Si
6.7	SLE RA 28	0	200	10000	350	Variabile	Si

Frecce lungo Y

Ascissa freccia	Combinazione	Freccia	Luce	L/f	L/f,min	Tipo	Verifica
100	SLE RA 33	-0.052	200	3829.3	250	Totale	Si
100	SLE RA 32	-0.052	200	3829.3	250	Totale	Si
100	SLE RA 25	-0.049	200	4102.8	250	Totale	Si
100	SLE RA 24	-0.049	200	4102.8	250	Totale	Si
100	SLE RA 21	-0.047	200	4243.7	250	Totale	Si
100	SLE RA 33	-0.05	200	3983.5	350	Variabile	Si
100	SLE RA 32	-0.05	200	3983.5	350	Variabile	Si
100	SLE RA 25	-0.047	200	4280.3	350	Variabile	Si
100	SLE RA 24	-0.047	200	4280.3	350	Variabile	Si
100	SLE RA 21	-0.045	200	4433.9	350	Variabile	Si

Superelemento in acciaio composto dall'asta 173

Caratteristiche del materiale

Acciaio: S275, fyk = 2750

Caratteristiche geometriche

Lunghezza: 200
Nodo iniziale: 88 Nodo finale: 86
Cerniera iniziale: Svincolo: M2, M3 Cerniera finale: Svincolo: M2, M3

Sovraresistenza: 0% Sisma Z: No

Caratteristiche della sezione

Sezione	Rotazione	Area	Jx	Jy	ix	iy	Wx	Wy	Wplx	Wply
HEA160	0	38.82	1674.7	615.62	6.57	3.98	220.36	76.95	245.43	117.67

Verifiche di resistenza

Verifica a taglio Y §4.2.4.1.2.4 NTC18

X	Comb.	Sfruttamento	VEd	Vc,Rd	Av	Interazione taglio-torsione	Riduzione torsione	Verifica
0	SLU 130	0.02	395.7	20045.7	13.26	Considerata	1	Si

Verifica a taglio Y SLD §4.2.4.1.2.4 NTC18

X	Comb.	Sfruttamento	VEd	Vc,Rd	Av	Interazione taglio-torsione	Riduzione torsione	Verifica
0	SLD 1	0.002	30.5	20045.7	13.26	Considerata	1	Si

Verifica a flessione semplice X §§ 4.2.4.1.2.3 - 4.2.4.1.2.6 - 4.2.4.1.2.7 - 4.2.4.1.2.8 NTC18

X	Comb.	Sfruttamento	Classe	Mx,Ed	Mx,Rd	Rid. Mx,Rd da VEd	ρx	ρy	Verifica
100	SLU 131	0.031	1	-19785.8	642783.4	1	0	0	Si

Verifica a flessione semplice X SLD §§ 4.2.4.1.2.3 - 4.2.4.1.2.6 - 4.2.4.1.2.7 - 4.2.4.1.2.8 NTC18

X	Comb.	Sfruttamento	Classe	Mx,Ed	Mx,Rd	Rid. Mx,Rd da VEd	ρx	ρy	Verifica
100	SLD 3	0.002	1	-1523.6	642783.4	1	0	0	Si

Verifiche ad instabilità

Caratteristiche iniziali

Membratura principale per controllo snellezza; Calcolo di snellezze ed N critici condotti secondo gli assi principali;
Curva X: b; Curva Y: c; Svergolamento: Carico all'estradosso; Curva svergolamento: b;

Dati per instabilità attorno a x

Numero rit.	Presente	Ascissa	Campata	βx/m	Vincolo a entrambi estremi	λx/m	λVer
1	Si	0					
			1-2	1	Si	30.4	Si, (<200)
2	Si	200					

Dati per instabilità attorno a y

Numero rit.	Presente	Ascissa	Campata	βy/n	k,LT	kw,LT	Vincolo a entrambi estremi	λy/n	λVer
1	Si	0							
			1-2	1	1	1	Si	50.2	Si, (<200)
2	Si	200							

Verifica a svergolamento §4.2.4.1.3.2 NTC18

X	Comb.	Sfruttamento	Classe	Obblig.	Mx,Ed	Mb,Rd,x	χ,LT	λ adim. LT	L,LT	M,critico	Verifica
100	SLU 129	0.033	1	Si	-19785.8	598018.7	0.93	0.57	200	2075773.7	Si

Verifica a svergolamento SLD §4.2.4.1.3.2 NTC18

X	Comb.	Sfruttamento	Classe	Obblig.	Mx,Ed	Mb,Rd,x	χ,LT	λ adim. LT	L,LT	M,critico	Verifica
100	SLD 3	0.003	1	Si	-1523.6	598018.7	0.93	0.57	200	2075773.7	Si

Verifica di stabilità a taglio anima Y §4.2.4.1.2.4 [4.2.27] NTC18

η	hw	tw	hw/tw max	Verifica
1.2	13.4	0.6	55.46	Si

Verifica di stabilità a taglio anima Y SLD §4.2.4.1.2.4 [4.2.27] NTC18

η	hw	tw	hw/tw max	Verifica
1.2	13.4	0.6	55.46	Si

Verifiche a deformabilità

Mensola X: No; Mensola Y: No.

Frecce lungo X

Ascissa freccia	Combinazione	Freccia	Luce	L/f	L/f,min	Tipo	Verifica
186.7	SLE RA 1	0	200	10000	250	Totale	Si
186.7	SLE RA 31	0	200	10000	250	Totale	Si
186.7	SLE RA 30	0	200	10000	250	Totale	Si
186.7	SLE RA 29	0	200	10000	250	Totale	Si
186.7	SLE RA 28	0	200	10000	250	Totale	Si
126.7	SLE RA 2	0	200	10000	350	Variabile	Si
126.7	SLE RA 31	0	200	10000	350	Variabile	Si
60	SLE RA 30	0	200	10000	350	Variabile	Si
126.7	SLE RA 29	0	200	10000	350	Variabile	Si
60	SLE RA 28	0	200	10000	350	Variabile	Si

Frecce lungo Y

Ascissa freccia	Combinazione	Freccia	Luce	L/f	L/f,min	Tipo	Verifica
100	SLE RA 1	-0.002	200	10000	250	Totale	Si
100	SLE RA 31	-0.018	200	10000	250	Totale	Si
100	SLE RA 30	-0.018	200	10000	250	Totale	Si
100	SLE RA 29	-0.015	200	10000	250	Totale	Si
100	SLE RA 28	-0.015	200	10000	250	Totale	Si
193.3	SLE RA 2	0	200	10000	350	Variabile	Si
100	SLE RA 31	-0.016	200	10000	350	Variabile	Si
100	SLE RA 30	-0.016	200	10000	350	Variabile	Si
100	SLE RA 29	-0.013	200	10000	350	Variabile	Si
100	SLE RA 28	-0.013	200	10000	350	Variabile	Si

Superelemento in acciaio composto dall'asta 174

Caratteristiche del materiale

Acciaio: S275, fyk = 2750

Caratteristiche geometriche

Lunghezza: 200
Nodo iniziale: 87 Nodo finale: 85
Cerniera iniziale: Svincolo: M2, M3 Cerniera finale: Svincolo: M2, M3
Sovraresistenza: 0% Sisma Z: No

Caratteristiche della sezione

Sezione	Rotazione	Area	Jx	Jy	ix	iy	Wx	Wy	Wplx	Wply
HEA160	0	38.82	1674.7	615.62	6.57	3.98	220.36	76.95	245.43	117.67

Verifiche di resistenza

Verifica a taglio Y §4.2.4.1.2.4 NTC18

X	Comb.	Sfruttamento	VEd	Vc,Rd	Av	Interazione taglio-torsione	Riduzione torsione	Verifica
0	SLU 130	0.02	395.7	20045.7	13.26	Considerata	1	Si

Verifica a taglio Y SLD §4.2.4.1.2.4 NTC18

X	Comb.	Sfruttamento	VEd	Vc,Rd	Av	Interazione taglio-torsione	Riduzione torsione	Verifica
200	SLD 2	0.002	-30.5	20045.7	13.26	Considerata	1	Si

Verifica a flessione semplice X §§ 4.2.4.1.2.3 - 4.2.4.1.2.6 - 4.2.4.1.2.7 - 4.2.4.1.2.8 NTC18

X	Comb.	Sfruttamento	Classe	Mx,Ed	Mx,Rd	Rid. Mx,Rd da VEd	ρx	ρy	Verifica
100	SLU 131	0.031	1	-19785.8	642783.4	1	0	0	Si

Verifica a flessione semplice X SLD §§ 4.2.4.1.2.3 - 4.2.4.1.2.6 - 4.2.4.1.2.7 - 4.2.4.1.2.8 NTC18

X	Comb.	Sfruttamento	Classe	Mx,Ed	Mx,Rd	Rid. Mx,Rd da VEd	ρx	ρy	Verifica
100	SLD 14	0.002	1	-1523.6	642783.4	1	0	0	Si

Verifiche ad instabilità

Caratteristiche iniziali

Membratura principale per controllo snellezza; Calcolo di snellezze ed N critici condotti secondo gli assi principali;
Curva X: b; Curva Y: c; Svergolamento: Carico all'estradosso; Curva svergolamento: b;

Dati per instabilità attorno a x

Numero rit.	Presente	Ascissa	Campata	βx/m	Vincolo a entrambi estremi	λx/m	λVer
1	Si	0					
			1-2	1	Si	30.4	Si, (<200)
2	Si	200					

Dati per instabilità attorno a y

Numero rit.	Presente	Ascissa	Campata	βy/n	k,LT	kw,LT	Vincolo a entrambi estremi	λy/n	λVer
1	Si	0							
			1-2	1	1	1	Si	50.2	Si, (<200)
2	Si	200							

Verifica a svergolamento §4.2.4.1.3.2 NTC18

X	Comb.	Sfruttamento	Classe	Obblig.	Mx,Ed	Mb,Rd,x	χ,LT	λ adim. LT	L,LT	M,critico	Verifica
100	SLU 129	0.033	1	Si	-19785.8	598018.7	0.93	0.57	200	2075773.7	Si

Verifica a svergolamento SLD §4.2.4.1.3.2 NTC18

X	Comb.	Sfruttamento	Classe	Obblig.	Mx,Ed	Mb,Rd,x	χ,LT	λ adim. LT	L,LT	M,critico	Verifica
100	SLD 14	0.003	1	Si	-1523.6	598018.7	0.93	0.57	200	2075773.7	Si

Verifica di stabilità a taglio anima Y §4.2.4.1.2.4 [4.2.27] NTC18

η	hw	tw	hw/tw max	Verifica
1.2	13.4	0.6	55.46	Si

Verifica di stabilità a taglio anima Y SLD §4.2.4.1.2.4 [4.2.27] NTC18

η	hw	tw	hw/tw max	Verifica
1.2	13.4	0.6	55.46	Si

Verifiche a deformabilità

Mensola X: No; Mensola Y: No.

Frecce lungo X

Ascissa freccia	Combinazione	Freccia	Luce	L/f	L/f,min	Tipo	Verifica
186.7	SLE RA 1	0	200	10000	250	Totale	Si
180	SLE RA 31	0	200	10000	250	Totale	Si
180	SLE RA 30	0	200	10000	250	Totale	Si
186.7	SLE RA 29	0	200	10000	250	Totale	Si
186.7	SLE RA 28	0	200	10000	250	Totale	Si
126.7	SLE RA 2	0	200	10000	350	Variabile	Si

Ascissa freccia	Combinazione	Freccia	Luce	L/f	L/f,min	Tipo	Verifica
180	SLE RA 31	0	200	10000	350	Variabile	Si
180	SLE RA 30	0	200	10000	350	Variabile	Si
133.3	SLE RA 29	0	200	10000	350	Variabile	Si
133.3	SLE RA 28	0	200	10000	350	Variabile	Si

Frecce lungo Y

Ascissa freccia	Combinazione	Freccia	Luce	L/f	L/f,min	Tipo	Verifica
100	SLE RA 1	-0.002	200	10000	250	Totale	Si
100	SLE RA 31	-0.018	200	10000	250	Totale	Si
100	SLE RA 30	-0.018	200	10000	250	Totale	Si
100	SLE RA 29	-0.015	200	10000	250	Totale	Si
100	SLE RA 28	-0.015	200	10000	250	Totale	Si
193.3	SLE RA 2	0	200	10000	350	Variabile	Si
100	SLE RA 31	-0.016	200	10000	350	Variabile	Si
100	SLE RA 30	-0.016	200	10000	350	Variabile	Si
100	SLE RA 29	-0.013	200	10000	350	Variabile	Si
100	SLE RA 28	-0.013	200	10000	350	Variabile	Si

Superelemento in acciaio composto dall'asta 175

Caratteristiche del materiale

Acciaio: S275, fyk = 2750

Caratteristiche geometriche

Lunghezza: 200
Nodo iniziale: 64 Nodo finale: 60
Cerniera iniziale: Svincolo: M2, M3 Cerniera finale: Svincolo: M2, M3
Sovraresistenza: 0% Sisma Z: No

Caratteristiche della sezione

Sezione	Rotazione	Area	Jx	Jy	ix	iy	Wx	Wy	Wplx	Wply
HEA160	0	38.82	1674.7	615.62	6.57	3.98	220.36	76.95	245.43	117.67

Verifiche di resistenza

Verifiche a forza assiale §4.2.4.1.2.1 - §4.2.4.1.2.2 NTC18

X	Comb.	Sfruttamento	Classe	NEd	Nc,Rd	Nt,Rd	Riduzione da taglio	ρx	ρy	Verifica
160	SLU 131	0.006		632		101662.9	1	0	0	Si

Verifiche a forza assiale SLD §4.2.4.1.2.1 - §4.2.4.1.2.2 NTC18

X	Comb.	Sfruttamento	Classe	NEd	Nc,Rd	Nt,Rd	Riduzione da taglio	ρx	ρy	Verifica
193.3	SLD 6	0.004		442.2		101662.9	1	0	0	Si

Verifica a taglio Y §4.2.4.1.2.4 NTC18

X	Comb.	Sfruttamento	VEd	Vc,Rd	Av	Interazione taglio-torsione	Riduzione torsione	Verifica
200	SLU 131	0.014	-276.3	20045.7	13.26	Considerata	1	Si

Verifica a taglio Y SLD §4.2.4.1.2.4 NTC18

X	Comb.	Sfruttamento	VEd	Vc,Rd	Av	Interazione taglio-torsione	Riduzione torsione	Verifica
0	SLD 1	0.002	30.5	20045.7	13.26	Considerata	1	Si

Verifica a presso/tenso flessione retta X §§ 4.2.4.1.2.3 - 4.2.4.1.2.6 - 4.2.4.1.2.7 - 4.2.4.1.2.8 NTC18

Verifiche eseguite utilizzando la formula conservativa (6.2) §6.2.1 EN 1993-1-1:2005.

X	Comb.	Sfruttamento	Classe	NEd	NRd	Rid. NRd da VEd	Mx,Ed	Mx,Rd	Rid. Mx,Rd da VEd	Rid. Mx,Rd da NEd	ρx	ρy	Verifica
100	SLU 131	0.029	1	632	101662.9	1	-14782	642783	1		0	0	Si

Verifica a presso/tenso flessione retta X SLD §§ 4.2.4.1.2.3 - 4.2.4.1.2.6 - 4.2.4.1.2.7 - 4.2.4.1.2.8 NTC18

Verifiche eseguite utilizzando la formula conservativa (6.2) §6.2.1 EN 1993-1-1:2005.

X	Comb.	Sfruttamento	Classe	NEd	NRd	Rid. NRd da VEd	Mx,Ed	Mx,Rd	Rid. Mx,Rd da VEd	Rid. Mx,Rd da NEd	ρx	ρy	Verifica
100	SLD 6	0.007	1	442.2	101662.9	1	-1524	642783	1		0	0	Si

Verifiche ad instabilità

Caratteristiche iniziali

Membratura principale per controllo snellezza; Calcolo di snellezze ed N critici condotti secondo gli assi principali;
Curva X: b; Curva Y: c; Svergolamento: Carico all'estradosso; Curva svergolamento: b;

Dati per instabilità attorno a x

Numero rit.	Presente	Ascissa	Campata	βx/m	Vincolo a entrambi estremi	λx/m	λVer
1	Si	0					
			1-2	1	Si	30.4	Si, (<200)
2	Si	200					

Dati per instabilità attorno a y

Numero rit.	Presente	Ascissa	Campata	βy/n	k,LT	kw,LT	Vincolo a entrambi estremi	λy/n	λVer
1	Si	0							
			1-2	1	1	1	Si	50.2	Si, (<200)

Numero rit.	Presente	Ascissa	Campata	βy/n	k,LT	kw,LT	Vincolo a entrambi estremi	λy/n	λVer
2	Si	200							

Verifica a svergolamento con trazione §4.2.4.1.3.2 NTC18 - §5.5.3 ENV 1993-1-1:1994

X	Comb.	Sfruttamento	Classe	Obblig.	NEd	Mx,Ed	Mx,Eff,Ed	Mb,Rd,x	χ,LT	λ adim. LT	L,LT	M,critico	Verifica
100	SLU 64	0.021	1	Si	494.4	-14324.8	-12360.2	598018.7	0.93	0.57	200	2075773.7	Si

Verifica di stabilità a taglio anima Y §4.2.4.1.2.4 [4.2.27] NTC18

η	hw	tw	hw/tw max	Verifica
1.2	13.4	0.6	55.46	Si

Verifica di stabilità a taglio anima Y SLD §4.2.4.1.2.4 [4.2.27] NTC18

η	hw	tw	hw/tw max	Verifica
1.2	13.4	0.6	55.46	Si

Verifiche a deformabilità

Mensola X: No; Mensola Y: No.

Frecce lungo X

Ascissa freccia	Combinazione	Freccia	Luce	L/f	L/f,min	Tipo	Verifica
146.7	SLE RA 1	0	200	10000	250	Totale	Si
146.7	SLE RA 31	0	200	10000	250	Totale	Si
146.7	SLE RA 30	0	200	10000	250	Totale	Si
20	SLE RA 29	0	200	10000	250	Totale	Si
20	SLE RA 28	0	200	10000	250	Totale	Si
180	SLE RA 2	0	200	10000	350	Variabile	Si
53.3	SLE RA 31	0	200	10000	350	Variabile	Si
53.3	SLE RA 30	0	200	10000	350	Variabile	Si
60	SLE RA 29	0	200	10000	350	Variabile	Si
60	SLE RA 28	0	200	10000	350	Variabile	Si

Frecce lungo Y

Ascissa freccia	Combinazione	Freccia	Luce	L/f	L/f,min	Tipo	Verifica
100	SLE RA 1	-0.002	200	10000	250	Totale	Si
100	SLE RA 31	-0.013	200	10000	250	Totale	Si
100	SLE RA 30	-0.013	200	10000	250	Totale	Si
100	SLE RA 29	-0.011	200	10000	250	Totale	Si
100	SLE RA 28	-0.011	200	10000	250	Totale	Si
153.3	SLE RA 2	0	200	10000	350	Variabile	Si
100	SLE RA 31	-0.011	200	10000	350	Variabile	Si
100	SLE RA 30	-0.011	200	10000	350	Variabile	Si
100	SLE RA 29	-0.009	200	10000	350	Variabile	Si
100	SLE RA 28	-0.009	200	10000	350	Variabile	Si

Superelemento in acciaio composto dall'asta 176

Caratteristiche del materiale

Acciaio: S275, fyk = 2750

Caratteristiche geometriche

Lunghezza: 200
Nodo iniziale: 61 Nodo finale: 57
Cerniera iniziale: Svincolo: M2, M3 Cerniera finale: Svincolo: M2, M3
Sovraresistenza: 0% Sisma Z: No

Caratteristiche della sezione

Sezione	Rotazione	Area	Jx	Jy	ix	iy	Wx	Wy	Wplx	Wply
HEA160	0	38.82	1674.7	615.62	6.57	3.98	220.36	76.95	245.43	117.67

Verifiche di resistenza

Verifiche a forza assiale §4.2.4.1.2.1 - §4.2.4.1.2.2 NTC18

X	Comb.	Sfruttamento	Classe	NEd	Nc,Rd	Nt,Rd	Riduzione da taglio	ρx	ρy	Verifica
160	SLU 131	0.006		632.8		101662.9	1	0	0	Si

Verifiche a forza assiale SLD §4.2.4.1.2.1 - §4.2.4.1.2.2 NTC18

X	Comb.	Sfruttamento	Classe	NEd	Nc,Rd	Nt,Rd	Riduzione da taglio	ρx	ρy	Verifica
200	SLD 10	0.004		442.2		101662.9	1	0	0	Si

Verifica a taglio Y §4.2.4.1.2.4 NTC18

X	Comb.	Sfruttamento	VEd	Vc,Rd	Av	Interazione taglio-torsione	Riduzione torsione	Verifica
0	SLU 99	0.014	276.3	20045.7	13.26	Considerata	1	Si

Verifica a taglio Y SLD §4.2.4.1.2.4 NTC18

X	Comb.	Sfruttamento	VEd	Vc,Rd	Av	Interazione taglio-torsione	Riduzione torsione	Verifica
200	SLD 2	0.002	-30.5	20045.7	13.26	Considerata	1	Si

Verifica a presso/tenso flessione retta X §§ 4.2.4.1.2.3 - 4.2.4.1.2.6 - 4.2.4.1.2.7 - 4.2.4.1.2.8 NTC18

Verifiche eseguite utilizzando la formula conservativa (6.2) §6.2.1 EN 1993-1-1:2005.

X	Comb.	Sfruttamento	Classe	NEd	NRd	Rid. NRd da VEd	Mx,Ed	Mx,Rd	Rid. Mx,Rd da VEd	Rid. Mx,Rd da NEd	ρx	ρy	Verifica
100	SLU 98	0.029	1	632.8	101662.9	1	-14779	642783	1		0	0	Si

Verifica a presso/tenso flessione retta X SLD §§ 4.2.4.1.2.3 - 4.2.4.1.2.6 - 4.2.4.1.2.7 - 4.2.4.1.2.8 NTC18

Verifiche eseguite utilizzando la formula conservativa (6.2) §6.2.1 EN 1993-1-1:2005.

X	Comb.	Sfruttamento	Classe	NEd	NRd	Rid. NRd da VEd	Mx,Ed	Mx,Rd	Rid. Mx,Rd da VEd	Rid. Mx,Rd da NEd	ρx	ρy	Verifica
100	SLD 9	0.007	1	442.2	101662.9	1	-1524	642783	1		0	0	Si

Verifiche ad instabilità

Caratteristiche iniziali

Membratura principale per controllo snellezza; Calcolo di snellezze ed N critici condotti secondo gli assi principali;
Curva X: b; Curva Y: c; Svergolamento: Carico all'estradosso; Curva svergolamento: b;

Dati per instabilità attorno a x

Numero rit.	Presente	Ascissa	Campata	βx/m	Vincolo a entrambi estremi	λx/m	λVer
1	Si	0					
			1-2	1	Si	30.4	Si, (<200)
2	Si	200					

Dati per instabilità attorno a y

Numero rit.	Presente	Ascissa	Campata	βy/n	k,LT	kw,LT	Vincolo a entrambi estremi	λy/n	λVer
1	Si	0							
			1-2	1	1	1	Si	50.2	Si, (<200)
2	Si	200							

Verifica a svergolamento con trazione §4.2.4.1.3.2 NTC18 - §5.5.3 ENV 1993-1-1:1994

X	Comb.	Sfruttamento	Classe	Obblig.	NEd	Mx,Ed	Mx,Eff,Ed	Mb,Rd,x	χ,LT	λ adim. LT	L,LT	M,critico	Verifica
100	SLU 31	0.021	1	Si	495.2	-14321.7	-12354	598018.7	0.93	0.57	200	2075773.7	Si

Verifica di stabilità a taglio anima Y §4.2.4.1.2.4 [4.2.27] NTC18

η	hw	tw	hw/tw max	Verifica
1.2	13.4	0.6	55.46	Si

Verifica di stabilità a taglio anima Y SLD §4.2.4.1.2.4 [4.2.27] NTC18

η	hw	tw	hw/tw max	Verifica
1.2	13.4	0.6	55.46	Si

Verifiche a deformabilità

Mensola X: No; Mensola Y: No.

Frecce lungo X

Ascissa freccia	Combinazione	Freccia	Luce	L/f	L/f,min	Tipo	Verifica
146.7	SLE RA 1	0	200	10000	250	Totale	Si
146.7	SLE RA 31	0	200	10000	250	Totale	Si
146.7	SLE RA 30	0	200	10000	250	Totale	Si
146.7	SLE RA 29	0	200	10000	250	Totale	Si
146.7	SLE RA 28	0	200	10000	250	Totale	Si
180	SLE RA 2	0	200	10000	350	Variabile	Si
80	SLE RA 31	0	200	10000	350	Variabile	Si
80	SLE RA 30	0	200	10000	350	Variabile	Si
80	SLE RA 29	0	200	10000	350	Variabile	Si
80	SLE RA 28	0	200	10000	350	Variabile	Si

Frecce lungo Y

Ascissa freccia	Combinazione	Freccia	Luce	L/f	L/f,min	Tipo	Verifica
100	SLE RA 1	-0.002	200	10000	250	Totale	Si
100	SLE RA 31	-0.013	200	10000	250	Totale	Si
100	SLE RA 30	-0.013	200	10000	250	Totale	Si
100	SLE RA 29	-0.011	200	10000	250	Totale	Si
100	SLE RA 28	-0.011	200	10000	250	Totale	Si
153.3	SLE RA 2	0	200	10000	350	Variabile	Si
100	SLE RA 31	-0.011	200	10000	350	Variabile	Si
100	SLE RA 30	-0.011	200	10000	350	Variabile	Si
100	SLE RA 29	-0.009	200	10000	350	Variabile	Si
100	SLE RA 28	-0.009	200	10000	350	Variabile	Si

Superelemento in acciaio composto dall'asta 177

Caratteristiche del materiale

Acciaio: S275, fyk = 2750

Caratteristiche geometriche

Lunghezza: 200
Nodo iniziale: 110 Nodo finale: 108
Cerniera iniziale: Svincolo: M2, M3 Cerniera finale: Svincolo: M2, M3
Sovraresistenza: 0% Sisma Z: No

Caratteristiche della sezione

Sezione	Rotazione	Area	Jx	Jy	ix	iy	Wx	Wy	Wplx	Wply
HEA160	0	38.82	1674.7	615.62	6.57	3.98	220.36	76.95	245.43	117.67

Verifiche di resistenza

Verifiche a forza assiale §4.2.4.1.2.1 - §4.2.4.1.2.2 NTC18

X	Comb.	Sfruttamento	Classe	NEd	Nc,Rd	Nt,Rd	Riduzione da taglio	ρx	ρy	Verifica
200	SLV 8	0.001	1	-116.9	101662.9		1	0	0	Si

Verifiche a forza assiale SLD §4.2.4.1.2.1 - §4.2.4.1.2.2 NTC18

X	Comb.	Sfruttamento	Classe	NEd	Nc,Rd	Nt,Rd	Riduzione da taglio	ρx	ρy	Verifica
0	SLD 7	0	1	-47.3	101662.9		1	0	0	Si

Verifica a taglio Y §4.2.4.1.2.4 NTC18

X	Comb.	Sfruttamento	VEd	Vc,Rd	Av	Interazione taglio-torsione	Riduzione torsione	Verifica
0	SLU 98	0.039	777.3	20045.7	13.26	Considerata	1	Si

Verifica a taglio Y SLD §4.2.4.1.2.4 NTC18

X	Comb.	Sfruttamento	VEd	Vc,Rd	Av	Interazione taglio-torsione	Riduzione torsione	Verifica
200	SLD 16	0.002	-30.5	20045.7	13.26	Considerata	1	Si

Verifica a flessione semplice X §§ 4.2.4.1.2.3 - 4.2.4.1.2.6 - 4.2.4.1.2.7 - 4.2.4.1.2.8 NTC18

X	Comb.	Sfruttamento	Classe	Mx,Ed	Mx,Rd	Rid. Mx,Rd da VEd	ρx	ρy	Verifica
100	SLU 131	0.06	1	-38808.4	642783.4	1	0	0	Si

Verifica a flessione semplice X SLD §§ 4.2.4.1.2.3 - 4.2.4.1.2.6 - 4.2.4.1.2.7 - 4.2.4.1.2.8 NTC18

X	Comb.	Sfruttamento	Classe	Mx,Ed	Mx,Rd	Rid. Mx,Rd da VEd	ρx	ρy	Verifica
100	SLD 2	0.002	1	-1523.6	642783.4	1	0	0	Si

Verifica a presso/tenso flessione retta X §§ 4.2.4.1.2.3 - 4.2.4.1.2.6 - 4.2.4.1.2.7 - 4.2.4.1.2.8 NTC18

Verifiche eseguite utilizzando la formula conservativa (6.2) §6.2.1 EN 1993-1-1:2005.

X	Comb.	Sfruttamento	Classe	NEd	NRd	Rid. NRd da VEd	Mx,Ed	Mx,Rd	Rid. Mx,Rd da VEd	Rid. Mx,Rd da NEd	ρx	ρy	Verifica
100	SLV 8	0.004	1	-116.9	101662.9	1	-1524	642783	1		0	0	Si

Verifica a presso/tenso flessione retta X SLD §§ 4.2.4.1.2.3 - 4.2.4.1.2.6 - 4.2.4.1.2.7 - 4.2.4.1.2.8 NTC18

Verifiche eseguite utilizzando la formula conservativa (6.2) §6.2.1 EN 1993-1-1:2005.

X	Comb.	Sfruttamento	Classe	NEd	NRd	Rid. NRd da VEd	Mx,Ed	Mx,Rd	Rid. Mx,Rd da VEd	Rid. Mx,Rd da NEd	ρx	ρy	Verifica
100	SLD 8	0.003	1	-47.3	101662.9	1	-1524	642783	1		0	0	Si

Verifiche ad instabilità

Caratteristiche iniziali

Membratura principale per controllo snellezza; Calcolo di snellezze ed N critici condotti secondo gli assi principali;
Curva X: b; Curva Y: c; Svergolamento: Carico all'estradosso; Curva svergolamento: b;

Dati per instabilità attorno a x

Numero rit.	Presente	Ascissa	Campata	βx/m	Vincolo a entrambi estremi	λx/m	λVer
1	Si	0					
			1-2	1	Si	30.4	Si, (<200)
2	Si	200					

Dati per instabilità attorno a y

Numero rit.	Presente	Ascissa	Campata	βy/n	k,LT	kw,LT	Vincolo a entrambi estremi	λy/n	λVer
1	Si	0							
			1-2	1	1	1	Si	50.2	Si, (<200)
2	Si	200							

Verifica a svergolamento §4.2.4.1.3.2 NTC18

X	Comb.	Sfruttamento	Classe	Obblig.	Mx,Ed	Mb,Rd,x	χ,LT	λ adim. LT	L,LT	M,critico	Verifica
100	SLU 131	0.065	1	Si	-38808.4	598018.7	0.93	0.57	200	2075773.7	Si

Verifica a svergolamento SLD §4.2.4.1.3.2 NTC18

X	Comb.	Sfruttamento	Classe	Obblig.	Mx,Ed	Mb,Rd,x	χ,LT	λ adim. LT	L,LT	M,critico	Verifica
100	SLD 2	0.003	1	Si	-1523.6	598018.7	0.93	0.57	200	2075773.7	Si

Verifica a svergolamento con trazione §4.2.4.1.3.2 NTC18 - §5.5.3 ENV 1993-1-1:1994

X	Comb.	Sfruttamento	Classe	Obblig.	NEd	Mx,Ed	Mx,Eff,Ed	Mb,Rd,x	χ,LT	λ adim. LT	L,LT	M,critico	Verifica
100	SLV 6	0.002	1	Si	107.3	-1523.6	-1097.2	598018.7	0.93	0.57	200	2075773.7	Si

Verifica di stabilità per pressoflessione §C.4.2.4.1.3.3.2 NTC18

X	Comb.	Sfruttamento	Classe	NEd	NRk	Mx,Ed max	Mx,Rk	My,Ed max	My,Rk	χ,x	χ,y	kxx	kxy	kyx	kyy	χ,LT	Verifica
0	SLV 7	0.004	1	-116.9	106746.1	1523.6	674922.6	0	323595.1	0.945	0.798	0.95	0.36	1	0.6	0.93	Si

Verifica di stabilità per pressoflessione SLD §C.4.2.4.1.3.3.2 NTC18

X	Comb.	Sfruttamento	Classe	NEd	NRk	Mx,Ed max	Mx,Rk	My,Ed max	My,Rk	χ,x	χ,y	kxx	kxy	kyx	kyy	χ,LT	Verifica
0	SLD 7	0.003	1	-47.3	106746.1	1523.6	674922.6	0	323595.1	0.945	0.798	0.95	0.36	1	0.6	0.93	Si

Verifica di stabilità a taglio anima Y §4.2.4.1.2.4 [4.2.27] NTC18

η	hw	tw	hw/tw max	Verifica
1.2	13.4	0.6	55.46	Si

Verifica di stabilità a taglio anima Y SLD §4.2.4.1.2.4 [4.2.27] NTC18

η	hw	tw	hw/tw max	Verifica
1.2	13.4	0.6	55.46	Si

Verifiche a deformabilità

Mensola X: No; Mensola Y: No.

Frecce lungo X

Ascissa freccia	Combinazione	Freccia	Luce	L/f	L/f,min	Tipo	Verifica
6.7	SLE RA 1	0	200	10000	250	Totale	Si
6.7	SLE RA 31	0	200	10000	250	Totale	Si
6.7	SLE RA 30	0	200	10000	250	Totale	Si
6.7	SLE RA 29	0	200	10000	250	Totale	Si
6.7	SLE RA 28	0	200	10000	250	Totale	Si
193.3	SLE RA 2	0	200	10000	350	Variabile	Si
106.7	SLE RA 31	0	200	10000	350	Variabile	Si
106.7	SLE RA 30	0	200	10000	350	Variabile	Si
120	SLE RA 29	0	200	10000	350	Variabile	Si
120	SLE RA 28	0	200	10000	350	Variabile	Si

Frecce lungo Y

Ascissa freccia	Combinazione	Freccia	Luce	L/f	L/f,min	Tipo	Verifica
100	SLE RA 33	-0.035	200	5780.2	250	Totale	Si
100	SLE RA 32	-0.035	200	5780.2	250	Totale	Si
100	SLE RA 25	-0.031	200	6516.8	250	Totale	Si
100	SLE RA 24	-0.031	200	6516.8	250	Totale	Si
100	SLE RA 31	-0.031	200	6537.6	250	Totale	Si
100	SLE RA 33	-0.033	200	6138.9	350	Variabile	Si
100	SLE RA 32	-0.033	200	6138.9	350	Variabile	Si
100	SLE RA 25	-0.029	200	6976.4	350	Variabile	Si
100	SLE RA 24	-0.029	200	6976.4	350	Variabile	Si
100	SLE RA 31	-0.029	200	7000.2	350	Variabile	Si

Superelemento in acciaio composto dall'asta 178

Caratteristiche del materiale

Acciaio: S275, fyk = 2750

Caratteristiche geometriche

Lunghezza: 200
Nodo iniziale: 109 Nodo finale: 107
Cerniera iniziale: Svincolo: M2, M3 Cerniera finale: Svincolo: M2, M3
Sovraresistenza: 0% Sisma Z: No

Caratteristiche della sezione

Sezione	Rotazione	Area	Jx	Jy	ix	iy	Wx	Wy	Wplx	Wply
HEA160	0	38.82	1674.7	615.62	6.57	3.98	220.36	76.95	245.43	117.67

Verifiche di resistenza

Verifiche a forza assiale §4.2.4.1.2.1 - §4.2.4.1.2.2 NTC18

X	Comb.	Sfruttamento	Classe	NEd	Nc,Rd	Nt,Rd	Riduzione da taglio	ρx	ρy	Verifica
200	SLV 12	0.001	1	-116.9	101662.9		1	0	0	Si

Verifiche a forza assiale SLD §4.2.4.1.2.1 - §4.2.4.1.2.2 NTC18

X	Comb.	Sfruttamento	Classe	NEd	Nc,Rd	Nt,Rd	Riduzione da taglio	ρx	ρy	Verifica
200	SLD 12	0	1	-47.3	101662.9		1	0	0	Si

Verifica a taglio Y §4.2.4.1.2.4 NTC18

X	Comb.	Sfruttamento	VEd	Vc,Rd	Av	Interazione taglio-torsione	Riduzione torsione	Verifica
200	SLU 131	0.039	-786.3	20045.7	13.26	Considerata	1	Si

Verifica a taglio Y SLD §4.2.4.1.2.4 NTC18

X	Comb.	Sfruttamento	VEd	Vc,Rd	Av	Interazione taglio-torsione	Riduzione torsione	Verifica
200	SLD 2	0.002	-30.5	20045.7	13.26	Considerata	1	Si

Verifica a flessione semplice X §§ 4.2.4.1.2.3 - 4.2.4.1.2.6 - 4.2.4.1.2.7 - 4.2.4.1.2.8 NTC18

X	Comb.	Sfruttamento	Classe	Mx,Ed	Mx,Rd	Rid. Mx,Rd da VEd	ρx	ρy	Verifica
100	SLU 99	0.061	1	-39314.5	642783.4	1	0	0	Si

Verifica a flessione semplice X SLD §§ 4.2.4.1.2.3 - 4.2.4.1.2.6 - 4.2.4.1.2.7 - 4.2.4.1.2.8 NTC18

X	Comb.	Sfruttamento	Classe	Mx,Ed	Mx,Rd	Rid. Mx,Rd da VEd	ρx	ρy	Verifica
100	SLD 14	0.002	1	-1523.6	642783.4	1	0	0	Si

Verifica a presso/tenso flessione retta X §§ 4.2.4.1.2.3 - 4.2.4.1.2.6 - 4.2.4.1.2.7 - 4.2.4.1.2.8 NTC18

Verifiche eseguite utilizzando la formula conservativa (6.2) §6.2.1 EN 1993-1-1:2005.

X	Comb.	Sfruttamento	Classe	NEd	NRd	Rid. NRd da VEd	Mx,Ed	Mx,Rd	Rid. Mx,Rd da VEd	Rid. Mx,Rd da NEd	ρx	ρy	Verifica
100	SLV 12	0.004	1	-116.9	101662.9	1	-1524	642783	1		0	0	Si

Verifica a presso/tenso flessione retta X SLD §§ 4.2.4.1.2.3 - 4.2.4.1.2.6 - 4.2.4.1.2.7 - 4.2.4.1.2.8 NTC18

Verifiche eseguite utilizzando la formula conservativa (6.2) §6.2.1 EN 1993-1-1:2005.

X	Comb.	Sfruttamento	Classe	NEd	NRd	Rid. NRd da VEd	Mx,Ed	Mx,Rd	Rid. Mx,Rd da VEd	Rid. Mx,Rd da NEd	ρx	ρy	Verifica
100	SLD 11	0.003	1	-47.3	101662.9	1	-1524	642783	1		0	0	Si

Verifiche ad instabilità

Caratteristiche iniziali

Membratura principale per controllo snellezza; Calcolo di snellezze ed N critici condotti secondo gli assi principali;
Curva X: b; Curva Y: c; Svergolamento: Carico all'estradosso; Curva svergolamento: b;

Dati per instabilità attorno a x

Numero rit.	Presente	Ascissa	Campata	βx/m	Vincolo a entrambi estremi	λx/m	λVer
1	Si	0					
			1-2	1	Si	30.4	Si, (<200)
2	Si	200					

Dati per instabilità attorno a y

Numero rit.	Presente	Ascissa	Campata	βy/n	k,LT	kw,LT	Vincolo a entrambi estremi	λy/n	λVer
1	Si	0							
			1-2	1	1	1	Si	50.2	Si, (<200)
2	Si	200							

Verifica a svergolamento §4.2.4.1.3.2 NTC18

X	Comb.	Sfruttamento	Classe	Obblig.	Mx,Ed	Mb,Rd,x	χ,LT	λ adim. LT	L,LT	M,critico	Verifica
100	SLU 99	0.066	1	Si	-39314.5	598018.7	0.93	0.57	200	2075773.7	Si

Verifica a svergolamento SLD §4.2.4.1.3.2 NTC18

X	Comb.	Sfruttamento	Classe	Obblig.	Mx,Ed	Mb,Rd,x	χ,LT	λ adim. LT	L,LT	M,critico	Verifica
100	SLD 14	0.003	1	Si	-1523.6	598018.7	0.93	0.57	200	2075773.7	Si

Verifica a svergolamento con trazione §4.2.4.1.3.2 NTC18 - §5.5.3 ENV 1993-1-1:1994

X	Comb.	Sfruttamento	Classe	Obblig.	NEd	Mx,Ed	Mx,Eff,Ed	Mb,Rd,x	χ,LT	λ adim. LT	L,LT	M,critico	Verifica
100	SLV 9	0.002	1	Si	107.3	-1523.6	-1097.2	598018.7	0.93	0.57	200	2075773.7	Si

Verifica di stabilità per pressoflessione §C.4.2.4.1.3.3.2 NTC18

X	Comb.	Sfruttamento	Classe	NEd	NRk	Mx,Ed max	Mx,Rk	My,Ed max	My,Rk	χ,x	χ,y	kxx	kxy	kyx	kyy	χ,LT	Verifica
200	SLV 12	0.004	1	-116.9	106746.1	1523.6	674922.6	0	323595.1	0.945	0.798	0.95	0.36	1	0.6	0.93	Si

Verifica di stabilità per pressoflessione SLD §C.4.2.4.1.3.3.2 NTC18

X	Comb.	Sfruttamento	Classe	NEd	NRk	Mx,Ed max	Mx,Rk	My,Ed max	My,Rk	χ,x	χ,y	kxx	kxy	kyx	kyy	χ,LT	Verifica
200	SLD 12	0.003	1	-47.3	106746.1	1523.6	674922.6	0	323595.1	0.945	0.798	0.95	0.36	1	0.6	0.93	Si

Verifica di stabilità a taglio anima Y §4.2.4.1.2.4 [4.2.27] NTC18

η	hw	tw	hw/tw max	Verifica
1.2	13.4	0.6	55.46	Si

Verifica di stabilità a taglio anima Y SLD §4.2.4.1.2.4 [4.2.27] NTC18

η	hw	tw	hw/tw max	Verifica
1.2	13.4	0.6	55.46	Si

Verifiche a deformabilità

Mensola X: No; Mensola Y: No.

Frecce lungo X

Ascissa freccia	Combinazione	Freccia	Luce	L/f	L/f,min	Tipo	Verifica
6.7	SLE RA 1	0	200	10000	250	Totale	Si
6.7	SLE RA 31	0	200	10000	250	Totale	Si
6.7	SLE RA 30	0	200	10000	250	Totale	Si
6.7	SLE RA 29	0	200	10000	250	Totale	Si
6.7	SLE RA 28	0	200	10000	250	Totale	Si
193.3	SLE RA 2	0	200	10000	350	Variabile	Si
6.7	SLE RA 31	0	200	10000	350	Variabile	Si
6.7	SLE RA 30	0	200	10000	350	Variabile	Si
153.3	SLE RA 29	0	200	10000	350	Variabile	Si
153.3	SLE RA 28	0	200	10000	350	Variabile	Si

Frecce lungo Y

Ascissa freccia	Combinazione	Freccia	Luce	L/f	L/f,min	Tipo	Verifica
100	SLE RA 33	-0.035	200	5706.3	250	Totale	Si
100	SLE RA 32	-0.035	200	5706.3	250	Totale	Si
100	SLE RA 31	-0.031	200	6443.3	250	Totale	Si
100	SLE RA 30	-0.031	200	6443.3	250	Totale	Si
100	SLE RA 25	-0.031	200	6450.1	250	Totale	Si
100	SLE RA 33	-0.033	200	6055.7	350	Variabile	Si
100	SLE RA 32	-0.033	200	6055.7	350	Variabile	Si
100	SLE RA 31	-0.029	200	6892.2	350	Variabile	Si
100	SLE RA 30	-0.029	200	6892.2	350	Variabile	Si
100	SLE RA 25	-0.029	200	6899.9	350	Variabile	Si

Superelemento in acciaio composto dall'asta 179

Caratteristiche del materiale

Acciaio: S275, fyk = 2750

Caratteristiche geometriche

Lunghezza: 200
Nodo iniziale: 122 Nodo finale: 121
Cerniera iniziale: Svincolo: M2, M3 Cerniera finale: Svincolo: M2, M3
Sovraresistenza: 0% Sisma Z: No

Caratteristiche della sezione

Sezione	Rotazione	Area	Jx	Jy	ix	iy	Wx	Wy	Wplx	Wply
HEA160	0	38.82	1674.7	615.62	6.57	3.98	220.36	76.95	245.43	117.67

Verifiche di resistenza

Verifiche a forza assiale §4.2.4.1.2.1 - §4.2.4.1.2.2 NTC18

X	Comb.	Sfruttamento	Classe	NEd	Nc,Rd	Nt,Rd	Riduzione da taglio	ρx	ρy	Verifica
200	SLV 8	0.005		554		101662.9	1	0	0	Si

Verifiche a forza assiale SLD §4.2.4.1.2.1 - §4.2.4.1.2.2 NTC18

X	Comb.	Sfruttamento	Classe	NEd	Nc,Rd	Nt,Rd	Riduzione da taglio	ρx	ρy	Verifica
200	SLD 8	0.002		210.6		101662.9	1	0	0	Si

Verifica a taglio Y §4.2.4.1.2.4 NTC18

X	Comb.	Sfruttamento	VEd	Vc,Rd	Av	Interazione taglio-torsione	Riduzione torsione	Verifica
0	SLU 131	0.059	1174.7	20045.7	13.26	Considerata	1	Si

Verifica a taglio Y SLD §4.2.4.1.2.4 NTC18

X	Comb.	Sfruttamento	VEd	Vc,Rd	Av	Interazione taglio-torsione	Riduzione torsione	Verifica
0	SLD 1	0.002	30.5	20045.7	13.26	Considerata	1	Si

Verifica a flessione semplice X §§ 4.2.4.1.2.3 - 4.2.4.1.2.6 - 4.2.4.1.2.7 - 4.2.4.1.2.8 NTC18

X	Comb.	Sfruttamento	Classe	Mx,Ed	Mx,Rd	Rid. Mx,Rd da VEd	ρx	ρy	Verifica
100	SLU 131	0.091	1	-58735.3	642783.4	1	0	0	Si

Verifica a presso/tenso flessione retta X §§ 4.2.4.1.2.3 - 4.2.4.1.2.6 - 4.2.4.1.2.7 - 4.2.4.1.2.8 NTC18

Verifiche eseguite utilizzando la formula conservativa (6.2) §6.2.1 EN 1993-1-1:2005.

X	Comb.	Sfruttamento	Classe	NEd	NRd	Rid. NRd da VEd	Mx,Ed	Mx,Rd	Rid. Mx,Rd da VEd	Rid. Mx,Rd da NEd	ρx	ρy	Verifica
100	SLV 8	0.008	1	554	101662.9	1	-1524	642783	1		0	0	Si

Verifica a presso/tenso flessione retta X SLD §§ 4.2.4.1.2.3 - 4.2.4.1.2.6 - 4.2.4.1.2.7 - 4.2.4.1.2.8 NTC18

Verifiche eseguite utilizzando la formula conservativa (6.2) §6.2.1 EN 1993-1-1:2005.

X	Comb.	Sfruttamento	Classe	NEd	NRd	Rid. NRd da VEd	Mx,Ed	Mx,Rd	Rid. Mx,Rd da VEd	Rid. Mx,Rd da NEd	ρx	ρy	Verifica
100	SLD 8	0.004	1	210.6	101662.9	1	-1524	642783	1		0	0	Si

Verifiche ad instabilità

Caratteristiche iniziali

Membratura principale per controllo snellezza; Calcolo di snellezze ed N critici condotti secondo gli assi principali;
Curva X: b; Curva Y: c; Svergolamento: Carico all'estradosso; Curva svergolamento: b;

Dati per instabilità attorno a x

Numero rit.	Presente	Ascissa	Campata	βx/m	Vincolo a entrambi estremi	λx/m	λVer
1	Si	0					
			1-2	1	Si	30.4	Si, (<200)
2	Si	200					

Dati per instabilità attorno a y

Numero rit.	Presente	Ascissa	Campata	βy/n	k,LT	kw,LT	Vincolo a entrambi estremi	λy/n	λVer
1	Si	0							
			1-2	1	1	1	Si	50.2	Si, (<200)
2	Si	200							

Verifica a svergolamento §4.2.4.1.3.2 NTC18

X	Comb.	Sfruttamento	Classe	Obblig.	Mx,Ed	Mb,Rd,x	χ,LT	λ adim. LT	L,LT	M,critico	Verifica
100	SLU 131	0.098	1	Si	-58735.3	598018.7	0.93	0.57	200	2075773.7	Si

Verifica a svergolamento con trazione §4.2.4.1.3.2 NTC18 - §5.5.3 ENV 1993-1-1:1994

X	Comb.	Sfruttamento	Classe	Obblig.	NEd	Mx,Ed	Mx,Eff,Ed	Mb,Rd,x	χ,LT	λ adim. LT	L,LT	M,critico	Verifica
100	SLV 15	0.001	1	Si	166.8	-1523.6	-860.6	598018.7	0.93	0.57	200	2075773.7	Si

Verifica a svergolamento con trazione SLD §4.2.4.1.3.2 NTC18 - §5.5.3 ENV 1993-1-1:1994

X	Comb.	Sfruttamento	Classe	Obblig.	NEd	Mx,Ed	Mx,Eff,Ed	Mb,Rd,x	χ,LT	λ adim. LT	L,LT	M,critico	Verifica
100	SLD 16	0.002	1	Si	63.8	-1523.6	-1270.1	598018.7	0.93	0.57	200	2075773.7	Si

Verifica di stabilità per pressoflessione §C.4.2.4.1.3.3.2 NTC18

X	Comb.	Sfruttamento	Classe	NEd	NRk	Mx,Ed max	Mx,Rk	My,Ed max	My,Rk	χ,x	χ,y	kxx	kxy	kyx	kyy	χ,LT	Verifica
186.7	SLV 10	0.009	1	-552.3	106746.1	1523.6	674922.6	0	323595.1	0.945	0.798	0.951	0.361	0.999	0.602	0.93	Si

Verifica di stabilità per pressoflessione SLD §C.4.2.4.1.3.3.2 NTC18

X	Comb.	Sfruttamento	Classe	NEd	NRk	Mx,Ed max	Mx,Rk	My,Ed max	My,Rk	χ,x	χ,y	kxx	kxy	kyx	kyy	χ,LT	Verifica
186.7	SLD 10	0.005	1	-208.9	106746.1	1523.6	674922.6	0	323595.1	0.945	0.798	0.95	0.361	1	0.601	0.93	Si

Verifica di stabilità a taglio anima Y §4.2.4.1.2.4 [4.2.27] NTC18

η	hw	tw	hw/tw max	Verifica
1.2	13.4	0.6	55.46	Si

Verifica di stabilità a taglio anima Y SLD §4.2.4.1.2.4 [4.2.27] NTC18

η	hw	tw	hw/tw max	Verifica
1.2	13.4	0.6	55.46	Si

Verifiche a deformabilità

Mensola X: No; Mensola Y: No.

Frecce lungo X

Ascissa freccia	Combinazione	Freccia	Luce	L/f	L/f,min	Tipo	Verifica
100	SLE RA 1	0	200	10000	250	Totale	Si
180	SLE RA 31	0	200	10000	250	Totale	Si
180	SLE RA 30	0	200	10000	250	Totale	Si
106.7	SLE RA 29	0	200	10000	250	Totale	Si
106.7	SLE RA 28	0	200	10000	250	Totale	Si
20	SLE RA 2	0	200	10000	350	Variabile	Si
180	SLE RA 31	0	200	10000	350	Variabile	Si
180	SLE RA 30	0	200	10000	350	Variabile	Si
106.7	SLE RA 29	0	200	10000	350	Variabile	Si
106.7	SLE RA 28	0	200	10000	350	Variabile	Si

Frecce lungo Y

Ascissa freccia	Combinazione	Freccia	Luce	L/f	L/f,min	Tipo	Verifica
100	SLE RA 33	-0.052	200	3829.3	250	Totale	Si
100	SLE RA 32	-0.052	200	3829.3	250	Totale	Si
100	SLE RA 25	-0.049	200	4102.8	250	Totale	Si
100	SLE RA 24	-0.049	200	4102.8	250	Totale	Si
100	SLE RA 21	-0.047	200	4243.7	250	Totale	Si
100	SLE RA 33	-0.05	200	3983.5	350	Variabile	Si
100	SLE RA 32	-0.05	200	3983.5	350	Variabile	Si
100	SLE RA 25	-0.047	200	4280.3	350	Variabile	Si
100	SLE RA 24	-0.047	200	4280.3	350	Variabile	Si
100	SLE RA 21	-0.045	200	4433.9	350	Variabile	Si

Superelemento in acciaio composto dall'asta 180

Caratteristiche del materiale

Acciaio: S275, fyk = 2750

Caratteristiche geometriche

Lunghezza: 200
Nodo iniziale: 86 Nodo finale: 84
Cerniera iniziale: Svincolo: M2, M3 Cerniera finale: Svincolo: M2, M3
Sovraresistenza: 0% Sisma Z: No

Caratteristiche della sezione

Sezione	Rotazione	Area	Jx	Jy	ix	iy	Wx	Wy	Wplx	Wply
HEA160	0	38.82	1674.7	615.62	6.57	3.98	220.36	76.95	245.43	117.67

Verifiche di resistenza

Verifiche a forza assiale §4.2.4.1.2.1 - §4.2.4.1.2.2 NTC18

X	Comb.	Sfruttamento	Classe	NEd	Nc,Rd	Nt,Rd	Riduzione da taglio	ρx	ρy	Verifica
200	SLV 12	0		40.1		101662.9	1	0	0	Si

Verifica a taglio Y §4.2.4.1.2.4 NTC18

X	Comb.	Sfruttamento	VEd	Vc,Rd	Av	Interazione taglio-torsione	Riduzione torsione	Verifica
200	SLU 98	0.02	-395.7	20032.5	13.26	Considerata	1	Si

Verifica a taglio Y SLD §4.2.4.1.2.4 NTC18

X	Comb.	Sfruttamento	VEd	Vc,Rd	Av	Interazione taglio-torsione	Riduzione torsione	Verifica
0	SLD 4	0.002	30.5	20030.2	13.26	Considerata	1	Si

Verifica a torsione §4.2.4.1.2.5 NTC18

X	Comb.	Sfruttamento torsione	TEd	TRd	Riduzione taglio resistente	Sfruttamento taglio-torsione	τEd,totale	τRd	Verifica
193.3	SLV 3	0.003	-47.3	14685.6	Considerata				Si

Verifica a torsione SLD §4.2.4.1.2.5 NTC18

X	Comb.	Sfruttamento torsione	TEd	TRd	Riduzione taglio resistente	Sfruttamento taglio-torsione	τEd,totale	τRd	Verifica
200	SLD 4	0.002	-28.4	14685.6	Considerata				Si

Verifica a flessione semplice X §§ 4.2.4.1.2.3 - 4.2.4.1.2.6 - 4.2.4.1.2.7 - 4.2.4.1.2.8 NTC18

X	Comb.	Sfruttamento	Classe	Mx,Ed	Mx,Rd	Rid. Mx,Rd da VEd	ρx	ρy	Verifica
100	SLU 130	0.031	1	-19785.8	642783.4	1	0	0	Si

Verifica a flessione semplice X SLD §§ 4.2.4.1.2.3 - 4.2.4.1.2.6 - 4.2.4.1.2.7 - 4.2.4.1.2.8 NTC18

X	Comb.	Sfruttamento	Classe	Mx,Ed	Mx,Rd	Rid. Mx,Rd da VEd	ρx	ρy	Verifica
100	SLD 4	0.002	1	-1523.6	642783.4	1	0	0	Si

Verifica a presso/tenso flessione retta X §§ 4.2.4.1.2.3 - 4.2.4.1.2.6 - 4.2.4.1.2.7 - 4.2.4.1.2.8 NTC18

Verifiche eseguite utilizzando la formula conservativa (6.2) §6.2.1 EN 1993-1-1:2005.

X	Comb.	Sfruttamento	Classe	NEd	NRd	Rid. NRd da VEd	Mx,Ed	Mx,Rd	Rid. Mx,Rd da VEd	Rid. Mx,Rd da NEd	ρx	ρy	Verifica
100	SLV 11	0.003	1	40.1	101662.9	1	-1524	642783	1		0	0	Si

Verifiche ad instabilità

Caratteristiche iniziali

Membratura principale per controllo snellezza; Calcolo di snellezze ed N critici condotti secondo gli assi principali;
Curva X: b; Curva Y: c; Svergolamento: Carico all'estradosso; Curva svergolamento: b;

Dati per instabilità attorno a x

Numero rit.	Presente	Ascissa	Campata	βx/m	Vincolo a entrambi estremi	λx/m	λVer
1	Si	0					
			1-2	1	Si	30.4	Si, (<200)
2	Si	200					

Dati per instabilità attorno a y

Numero rit.	Presente	Ascissa	Campata	βy/n	k,LT	kw,LT	Vincolo a entrambi estremi	λy/n	λVer
1	Si	0							
			1-2	1	1	1	Si	50.2	Si, (<200)
2	Si	200							

Verifica a svergolamento §4.2.4.1.3.2 NTC18

X	Comb.	Sfruttamento	Classe	Obblig.	Mx,Ed	Mb,Rd,x	χ,LT	λ adim. LT	L,LT	M,critico	Verifica
100	SLU 97	0.033	1	Si	-19785.8	598018.7	0.93	0.57	200	2075773.7	Si

Verifica a svergolamento SLD §4.2.4.1.3.2 NTC18

X	Comb.	Sfruttamento	Classe	Obblig.	Mx,Ed	Mb,Rd,x	χ,LT	λ adim. LT	L,LT	M,critico	Verifica
100	SLD 4	0.003	1	Si	-1523.6	598018.7	0.93	0.57	200	2075773.7	Si

Verifica a svergolamento con trazione §4.2.4.1.3.2 NTC18 - §5.5.3 ENV 1993-1-1:1994

X	Comb.	Sfruttamento	Classe	Obblig.	NEd	Mx,Ed	Mx,Eff,Ed	Mb,Rd,x	χ,LT	λ adim. LT	L,LT	M,critico	Verifica
100	SLV 8	0.002	1	Si	40.1	-1523.6	-1364.2	598018.7	0.93	0.57	200	2075773.7	Si

Verifica di stabilità a taglio anima Y §4.2.4.1.2.4 [4.2.27] NTC18

η	hw	tw	hw/tw max	Verifica
1.2	13.4	0.6	55.46	Si

Verifica di stabilità a taglio anima Y SLD §4.2.4.1.2.4 [4.2.27] NTC18

η	hw	tw	hw/tw max	Verifica
1.2	13.4	0.6	55.46	Si

Verifiche a deformabilità

Mensola X: No; Mensola Y: No.

Frecce lungo X

Ascissa freccia	Combinazione	Freccia	Luce	L/f	L/f,min	Tipo	Verifica
40	SLE RA 1	0	200	10000	250	Totale	Si
80	SLE RA 31	0	200	10000	250	Totale	Si
80	SLE RA 30	0	200	10000	250	Totale	Si
80	SLE RA 29	0	200	10000	250	Totale	Si
80	SLE RA 28	0	200	10000	250	Totale	Si
193.3	SLE RA 2	0	200	10000	350	Variabile	Si
193.3	SLE RA 31	0	200	10000	350	Variabile	Si
73.3	SLE RA 30	0	200	10000	350	Variabile	Si
193.3	SLE RA 29	0	200	10000	350	Variabile	Si
26.7	SLE RA 28	0	200	10000	350	Variabile	Si

Frecce lungo Y

Ascissa freccia	Combinazione	Freccia	Luce	L/f	L/f,min	Tipo	Verifica
100	SLE RA 1	-0.002	200	10000	250	Totale	Si
100	SLE RA 31	-0.018	200	10000	250	Totale	Si
100	SLE RA 30	-0.018	200	10000	250	Totale	Si
100	SLE RA 29	-0.015	200	10000	250	Totale	Si
100	SLE RA 28	-0.015	200	10000	250	Totale	Si
180	SLE RA 2	0	200	10000	350	Variabile	Si
100	SLE RA 31	-0.016	200	10000	350	Variabile	Si
100	SLE RA 30	-0.016	200	10000	350	Variabile	Si
100	SLE RA 29	-0.013	200	10000	350	Variabile	Si
100	SLE RA 28	-0.013	200	10000	350	Variabile	Si

Superelemento in acciaio composto dall'asta 181

Caratteristiche del materiale

Acciaio: S275, fyk = 2750

Caratteristiche geometriche

Lunghezza: 200
Nodo iniziale: 85 Nodo finale: 83
Cerniera iniziale: Svincolo: M2, M3 Cerniera finale: Svincolo: M2, M3
Sovraresistenza: 0% Sisma Z: No

Caratteristiche della sezione

Sezione	Rotazione	Area	Jx	Jy	ix	iy	Wx	Wy	Wplx	Wply
HEA160	0	38.82	1674.7	615.62	6.57	3.98	220.36	76.95	245.43	117.67

Verifiche di resistenza

Verifiche a forza assiale §4.2.4.1.2.1 - §4.2.4.1.2.2 NTC18

X	Comb.	Sfruttamento	Classe	NEd	Nc,Rd	Nt,Rd	Riduzione da taglio	ρx	ρy	Verifica
0	SLV 7	0		40.1		101662.9	1	0	0	Si

Verifica a taglio Y §4.2.4.1.2.4 NTC18

X	Comb.	Sfruttamento	VEd	Vc,Rd	Av	Interazione taglio-torsione	Riduzione torsione	Verifica
0	SLU 131	0.02	395.7	20032.2	13.26	Considerata	1	Si

Verifica a taglio Y SLD §4.2.4.1.2.4 NTC18

X	Comb.	Sfruttamento	VEd	Vc,Rd	Av	Interazione taglio-torsione	Riduzione torsione	Verifica
0	SLD 16	0.002	30.5	20030.2	13.26	Considerata	1	Si

Verifica a torsione §4.2.4.1.2.5 NTC18

X	Comb.	Sfruttamento torsione	TEd	TRd	Riduzione taglio resistente	Sfruttamento taglio-torsione	τEd,totale	τRd	Verifica
200	SLV 16	0.003	47.3	14685.6	Considerata				Si

Verifica a torsione SLD §4.2.4.1.2.5 NTC18

X	Comb.	Sfruttamento torsione	TEd	TRd	Riduzione taglio resistente	Sfruttamento taglio-torsione	τEd,totale	τRd	Verifica
200	SLD 16	0.002	28.4	14685.6	Considerata				Si

Verifica a flessione semplice X §§ 4.2.4.1.2.3 - 4.2.4.1.2.6 - 4.2.4.1.2.7 - 4.2.4.1.2.8 NTC18

X	Comb.	Sfruttamento	Classe	Mx,Ed	Mx,Rd	Rid. Mx,Rd da VEd	ρx	ρy	Verifica
100	SLU 130	0.031	1	-19785.8	642783.4	1	0	0	Si

Verifica a flessione semplice X SLD §§ 4.2.4.1.2.3 - 4.2.4.1.2.6 - 4.2.4.1.2.7 - 4.2.4.1.2.8 NTC18

X	Comb.	Sfruttamento	Classe	Mx,Ed	Mx,Rd	Rid. Mx,Rd da VEd	ρx	ρy	Verifica
100	SLD 13	0.002	1	-1523.6	642783.4	1	0	0	Si

Verifica a presso/tenso flessione retta X §§ 4.2.4.1.2.3 - 4.2.4.1.2.6 - 4.2.4.1.2.7 - 4.2.4.1.2.8 NTC18

Verifiche eseguite utilizzando la formula conservativa (6.2) §6.2.1 EN 1993-1-1:2005.

X	Comb.	Sfruttamento	Classe	NEd	NRd	Rid. NRd da VEd	Mx,Ed	Mx,Rd	Rid. Mx,Rd da VEd	Rid. Mx,Rd da NEd	ρx	ρy	Verifica
100	SLV 8	0.003	1	40.1	101662.9	1	-1524	642783	1		0	0	Si

Verifiche ad instabilità

Caratteristiche iniziali

Membratura principale per controllo snellezza; Calcolo di snellezze ed N critici condotti secondo gli assi principali;
Curva X: b; Curva Y: c; Svergolamento: Carico all'estradosso; Curva svergolamento: b;

Dati per instabilità attorno a x

Numero rit.	Presente	Ascissa	Campata	βx/m	Vincolo a entrambi estremi	λx/m	λVer
1	Si	0					
			1-2	1	Si	30.4	Si, (<200)
2	Si	200					

Dati per instabilità attorno a y

Numero rit.	Presente	Ascissa	Campata	βy/n	k,LT	kw,LT	Vincolo a entrambi estremi	λy/n	λVer
1	Si	0							
			1-2	1	1	1	Si	50.2	Si, (<200)
2	Si	200							

Verifica a svergolamento §4.2.4.1.3.2 NTC18

X	Comb.	Sfruttamento	Classe	Obblig.	Mx,Ed	Mb,Rd,x	χ,LT	λ adim. LT	L,LT	M,critico	Verifica
100	SLU 97	0.033	1	Si	-19785.8	598018.7	0.93	0.57	200	2075773.7	Si

Verifica a svergolamento SLD §4.2.4.1.3.2 NTC18

X	Comb.	Sfruttamento	Classe	Obblig.	Mx,Ed	Mb,Rd,x	χ,LT	λ adim. LT	L,LT	M,critico	Verifica
100	SLD 15	0.003	1	Si	-1523.6	598018.7	0.93	0.57	200	2075773.7	Si

Verifica a svergolamento con trazione §4.2.4.1.3.2 NTC18 - §5.5.3 ENV 1993-1-1:1994

X	Comb.	Sfruttamento	Classe	Obblig.	NEd	Mx,Ed	Mx,Eff,Ed	Mb,Rd,x	χ,LT	λ adim. LT	L,LT	M,critico	Verifica
100	SLV 11	0.002	1	Si	40.1	-1523.6	-1364.2	598018.7	0.93	0.57	200	2075773.7	Si

Verifica di stabilità a taglio anima Y §4.2.4.1.2.4 [4.2.27] NTC18

η	hw	tw	hw/tw max	Verifica
1.2	13.4	0.6	55.46	Si

Verifica di stabilità a taglio anima Y SLD §4.2.4.1.2.4 [4.2.27] NTC18

η	hw	tw	hw/tw max	Verifica
1.2	13.4	0.6	55.46	Si

Verifiche a deformabilità

Mensola X: No; Mensola Y: No.

Frecce lungo X

Ascissa freccia	Combinazione	Freccia	Luce	L/f	L/f,min	Tipo	Verifica
40	SLE RA 1	0	200	10000	250	Totale	Si
80	SLE RA 31	0	200	10000	250	Totale	Si
40	SLE RA 30	0	200	10000	250	Totale	Si
80	SLE RA 29	0	200	10000	250	Totale	Si
40	SLE RA 28	0	200	10000	250	Totale	Si
193.3	SLE RA 2	0	200	10000	350	Variabile	Si
193.3	SLE RA 31	0	200	10000	350	Variabile	Si
53.3	SLE RA 30	0	200	10000	350	Variabile	Si
193.3	SLE RA 29	0	200	10000	350	Variabile	Si
40	SLE RA 28	0	200	10000	350	Variabile	Si

Frecce lungo Y

Ascissa freccia	Combinazione	Freccia	Luce	L/f	L/f,min	Tipo	Verifica
100	SLE RA 1	-0.002	200	10000	250	Totale	Si
100	SLE RA 31	-0.018	200	10000	250	Totale	Si
100	SLE RA 30	-0.018	200	10000	250	Totale	Si
100	SLE RA 29	-0.015	200	10000	250	Totale	Si
100	SLE RA 28	-0.015	200	10000	250	Totale	Si
180	SLE RA 2	0	200	10000	350	Variabile	Si
100	SLE RA 31	-0.016	200	10000	350	Variabile	Si
100	SLE RA 30	-0.016	200	10000	350	Variabile	Si
100	SLE RA 29	-0.013	200	10000	350	Variabile	Si
100	SLE RA 28	-0.013	200	10000	350	Variabile	Si

Superelemento in acciaio composto dall'asta 182

Caratteristiche del materiale

Acciaio: S275, fyk = 2750

Caratteristiche geometriche

Lunghezza: 200
Nodo iniziale: 60 Nodo finale: 56
Cerniera iniziale: Svincolo: M2, M3 Cerniera finale: Svincolo: M2, M3
Sovraresistenza: 0% Sisma Z: No

Caratteristiche della sezione

Sezione	Rotazione	Area	Jx	Jy	ix	iy	Wx	Wy	Wplx	Wply
HEA160	0	38.82	1674.7	615.62	6.57	3.98	220.36	76.95	245.43	117.67

Verifiche di resistenza

Verifiche a forza assiale §4.2.4.1.2.1 - §4.2.4.1.2.2 NTC18

X	Comb.	Sfruttamento	Classe	NEd	Nc,Rd	Nt,Rd	Riduzione da taglio	ρx	ρy	Verifica
0	SLV 5	0.003		329.5		101662.9	1	0	0	Si

Verifiche a forza assiale SLD §4.2.4.1.2.1 - §4.2.4.1.2.2 NTC18

X	Comb.	Sfruttamento	Classe	NEd	Nc,Rd	Nt,Rd	Riduzione da taglio	ρx	ρy	Verifica
193.3	SLD 6	0.002		227.6		101662.9	1	0	0	Si

Verifica a taglio Y §4.2.4.1.2.4 NTC18

X	Comb.	Sfruttamento	VEd	Vc,Rd	Av	Interazione taglio-torsione	Riduzione torsione	Verifica
0	SLU 132	0.014	276.3	20033.6	13.26	Considerata	1	Si

Verifica a taglio Y SLD §4.2.4.1.2.4 NTC18

X	Comb.	Sfruttamento	VEd	Vc,Rd	Av	Interazione taglio-torsione	Riduzione torsione	Verifica
200	SLD 16	0.002	-30.5	20026.7	13.26	Considerata	1	Si

Verifica a torsione §4.2.4.1.2.5 NTC18

X	Comb.	Sfruttamento torsione	TEd	TRd	Riduzione taglio resistente	Sfruttamento taglio-torsione	τEd,totale	τRd	Verifica
200	SLV 16	0.004	65.9	14685.6	Considerata				Si

Verifica a torsione SLD §4.2.4.1.2.5 NTC18

X	Comb.	Sfruttamento torsione	TEd	TRd	Riduzione taglio resistente	Sfruttamento taglio-torsione	τEd,totale	τRd	Verifica
200	SLD 16	0.002	34.6	14685.6	Considerata				Si

Verifica a flessione semplice X §§ 4.2.4.1.2.3 - 4.2.4.1.2.6 - 4.2.4.1.2.7 - 4.2.4.1.2.8 NTC18

X	Comb.	Sfruttamento	Classe	Mx,Ed	Mx,Rd	Rid. Mx,Rd da VEd	ρx	ρy	Verifica
100	SLV 8	0.002	1	-1523.6	642783.4	1	0	0	Si

Verifica a presso/tenso flessione retta X §§ 4.2.4.1.2.3 - 4.2.4.1.2.6 - 4.2.4.1.2.7 - 4.2.4.1.2.8 NTC18

Verifiche eseguite utilizzando la formula conservativa (6.2) §6.2.1 EN 1993-1-1:2005.

X	Comb.	Sfruttamento	Classe	NEd	NRd	Rid. NRd da VEd	Mx,Ed	Mx,Rd	Rid. Mx,Rd da VEd	Rid. Mx,Rd da NEd	ρx	ρy	Verifica
100	SLU 131	0.025	1	239.7	101662.9	1	-14780	642783	1		0	0	Si

Verifica a presso/tenso flessione retta X SLD §§ 4.2.4.1.2.3 - 4.2.4.1.2.6 - 4.2.4.1.2.7 - 4.2.4.1.2.8 NTC18

Verifiche eseguite utilizzando la formula conservativa (6.2) §6.2.1 EN 1993-1-1:2005.

X	Comb.	Sfruttamento	Classe	NEd	NRd	Rid. NRd da VEd	Mx,Ed	Mx,Rd	Rid. Mx,Rd da VEd	Rid. Mx,Rd da NEd	ρx	ρy	Verifica
100	SLD 5	0.005	1	227.6	101662.9	1	-1524	642783	1		0	0	Si

Verifiche ad instabilità

Caratteristiche iniziali

Membratura principale per controllo snellezza; Calcolo di snellezze ed N critici condotti secondo gli assi principali;
Curva X: b; Curva Y: c; Svergolamento: Carico all'estradosso; Curva svergolamento: b;

Dati per instabilità attorno a x

Numero rit.	Presente	Ascissa	Campata	βx/m	Vincolo a entrambi estremi	λx/m	λVer
1	Si	0					
			1-2	1	Si	30.4	Si, (<200)
2	Si	200					

Dati per instabilità attorno a y

Numero rit.	Presente	Ascissa	Campata	βy/n	k,LT	kw,LT	Vincolo a entrambi estremi	λy/n	λVer
1	Si	0							
			1-2	1	1	1	Si	50.2	Si, (<200)
2	Si	200							

Verifica a svergolamento §4.2.4.1.3.2 NTC18

X	Comb.	Sfruttamento	Classe	Obblig.	Mx,Ed	Mb,Rd,x	χ,LT	λ adim. LT	L,LT	M,critico	Verifica
100	SLV 8	0.003	1	Si	-1523.6	598018.7	0.93	0.57	200	2075773.7	Si

Verifica a svergolamento con trazione §4.2.4.1.3.2 NTC18 - §5.5.3 ENV 1993-1-1:1994

X	Comb.	Sfruttamento	Classe	Obblig.	NEd	Mx,Ed	Mx,Eff,Ed	Mb,Rd,x	χ,LT	λ adim. LT	L,LT	M,critico	Verifica
100	SLU 97	0.023	1	Si	237.3	-14780.3	-13837.5	598018.7	0.93	0.57	200	2075773.7	Si

Verifica a svergolamento con trazione SLD §4.2.4.1.3.2 NTC18 - §5.5.3 ENV 1993-1-1:1994

X	Comb.	Sfruttamento	Classe	Obblig.	NEd	Mx,Ed	Mx,Eff,Ed	Mb,Rd,x	χ,LT	λ adim. LT	L,LT	M,critico	Verifica
100	SLD 12	0.002	1	Si	103	-1523.6	-1114.4	598018.7	0.93	0.57	200	2075773.7	Si

Verifica di stabilità a taglio anima Y §4.2.4.1.2.4 [4.2.27] NTC18

η	hw	tw	hw/tw max	Verifica
1.2	13.4	0.6	55.46	Si

Verifica di stabilità a taglio anima Y SLD §4.2.4.1.2.4 [4.2.27] NTC18

η	hw	tw	hw/tw max	Verifica
1.2	13.4	0.6	55.46	Si

Verifiche a deformabilità

Mensola X: No; Mensola Y: No.

Frecce lungo X

Ascissa freccia	Combinazione	Freccia	Luce	L/f	L/f,min	Tipo	Verifica
6.7	SLE RA 1	0	200	10000	250	Totale	Si
180	SLE RA 31	0	200	10000	250	Totale	Si
26.7	SLE RA 30	0	200	10000	250	Totale	Si
180	SLE RA 29	0	200	10000	250	Totale	Si
26.7	SLE RA 28	0	200	10000	250	Totale	Si
186.7	SLE RA 2	0	200	10000	350	Variabile	Si
186.7	SLE RA 31	0	200	10000	350	Variabile	Si
53.3	SLE RA 30	0	200	10000	350	Variabile	Si
186.7	SLE RA 29	0	200	10000	350	Variabile	Si
6.7	SLE RA 28	0	200	10000	350	Variabile	Si

Frecce lungo Y

Ascissa freccia	Combinazione	Freccia	Luce	L/f	L/f,min	Tipo	Verifica
100	SLE RA 1	-0.002	200	10000	250	Totale	Si
100	SLE RA 31	-0.013	200	10000	250	Totale	Si
100	SLE RA 30	-0.013	200	10000	250	Totale	Si
100	SLE RA 29	-0.011	200	10000	250	Totale	Si
100	SLE RA 28	-0.011	200	10000	250	Totale	Si
173.3	SLE RA 2	0	200	10000	350	Variabile	Si
100	SLE RA 31	-0.011	200	10000	350	Variabile	Si
100	SLE RA 30	-0.011	200	10000	350	Variabile	Si
100	SLE RA 29	-0.009	200	10000	350	Variabile	Si
100	SLE RA 28	-0.009	200	10000	350	Variabile	Si

Superelemento in acciaio composto dall'asta 183

Caratteristiche del materiale

Acciaio: S275, fyk = 2750

Caratteristiche geometriche

Lunghezza: 200
Nodo iniziale: 57 Nodo finale: 53
Cerniera iniziale: Svincolo: M2, M3 Cerniera finale: Svincolo: M2, M3
Sovraresistenza: 0% Sisma Z: No

Caratteristiche della sezione

Sezione	Rotazione	Area	Jx	Jy	ix	iy	Wx	Wy	Wplx	Wply
HEA160	0	38.82	1674.7	615.62	6.57	3.98	220.36	76.95	245.43	117.67

Verifiche di resistenza

Verifiche a forza assiale §4.2.4.1.2.1 - §4.2.4.1.2.2 NTC18

X	Comb.	Sfruttamento	Classe	NEd	Nc,Rd	Nt,Rd	Riduzione da taglio	ρx	ρy	Verifica
200	SLV 9	0.003		329.5		101662.9	1	0	0	Si

Verifiche a forza assiale SLD §4.2.4.1.2.1 - §4.2.4.1.2.2 NTC18

X	Comb.	Sfruttamento	Classe	NEd	Nc,Rd	Nt,Rd	Riduzione da taglio	ρx	ρy	Verifica
186.7	SLD 10	0.002		227.6		101662.9	1	0	0	Si

Verifica a taglio Y §4.2.4.1.2.4 NTC18

X	Comb.	Sfruttamento	VEd	Vc,Rd	Av	Interazione taglio-torsione	Riduzione torsione	Verifica
0	SLU 99	0.014	275.3	20033.9	13.26	Considerata	1	Si

Verifica a taglio Y SLD §4.2.4.1.2.4 NTC18

X	Comb.	Sfruttamento	VEd	Vc,Rd	Av	Interazione taglio-torsione	Riduzione torsione	Verifica
200	SLD 4	0.002	-30.5	20026.7	13.26	Considerata	1	Si

Verifica a torsione §4.2.4.1.2.5 NTC18

X	Comb.	Sfruttamento torsione	TEd	TRd	Riduzione taglio resistente	Sfruttamento taglio-torsione	τEd,totale	τRd	Verifica
200	SLV 3	0.004	-65.9	14685.6	Considerata				Si

Verifica a torsione SLD §4.2.4.1.2.5 NTC18

X	Comb.	Sfruttamento torsione	TEd	TRd	Riduzione taglio resistente	Sfruttamento taglio-torsione	τEd,totale	τRd	Verifica
200	SLD 3	0.002	-34.6	14685.6	Considerata				Si

Verifica a flessione semplice X §§ 4.2.4.1.2.3 - 4.2.4.1.2.6 - 4.2.4.1.2.7 - 4.2.4.1.2.8 NTC18

X	Comb.	Sfruttamento	Classe	Mx,Ed	Mx,Rd	Rid. Mx,Rd da VEd	ρx	ρy	Verifica
100	SLV 11	0.002	1	-1523.6	642783.4	1	0	0	Si

Verifica a presso/tenso flessione retta X §§ 4.2.4.1.2.3 - 4.2.4.1.2.6 - 4.2.4.1.2.7 - 4.2.4.1.2.8 NTC18

Verifiche eseguite utilizzando la formula conservativa (6.2) §6.2.1 EN 1993-1-1:2005.

X	Comb.	Sfruttamento	Classe	NEd	NRd	Rid. NRd da VEd	Mx,Ed	Mx,Rd	Rid. Mx,Rd da VEd	Rid. Mx,Rd da NEd	ρx	ρy	Verifica
100	SLU 131	0.025	1	240	101662.9	1	-14774	642783	1		0	0	Si

Verifica a presso/tenso flessione retta X SLD §§ 4.2.4.1.2.3 - 4.2.4.1.2.6 - 4.2.4.1.2.7 - 4.2.4.1.2.8 NTC18

Verifiche eseguite utilizzando la formula conservativa (6.2) §6.2.1 EN 1993-1-1:2005.

X	Comb.	Sfruttamento	Classe	NEd	NRd	Rid. NRd da VEd	Mx,Ed	Mx,Rd	Rid. Mx,Rd da VEd	Rid. Mx,Rd da NEd	ρx	ρy	Verifica
100	SLD 10	0.005	1	227.6	101662.9	1	-1524	642783	1		0	0	Si

Verifiche ad instabilità

Caratteristiche iniziali

Membratura principale per controllo snellezza; Calcolo di snellezze ed N critici condotti secondo gli assi principali;
Curva X: b; Curva Y: c; Svergolamento: Carico all'estradosso; Curva svergolamento: b;

Dati per instabilità attorno a x

Numero rit.	Presente	Ascissa	Campata	βx/m	Vincolo a entrambi estremi	λx/m	λVer
1	Si	0					
			1-2	1	Si	30.4	Si, (<200)
2	Si	200					

Dati per instabilità attorno a y

Numero rit.	Presente	Ascissa	Campata	βy/n	k,LT	kw,LT	Vincolo a entrambi estremi	λy/n	λVer
1	Si	0							
			1-2	1	1	1	Si	50.2	Si, (<200)
2	Si	200							

Verifica a svergolamento §4.2.4.1.3.2 NTC18

X	Comb.	Sfruttamento	Classe	Obblig.	Mx,Ed	Mb,Rd,x	χ,LT	λ adim. LT	L,LT	M,critico	Verifica
100	SLV 11	0.003	1	Si	-1523.6	598018.7	0.93	0.57	200	2075773.7	Si

Verifica a svergolamento con trazione §4.2.4.1.3.2 NTC18 - §5.5.3 ENV 1993-1-1:1994

X	Comb.	Sfruttamento	Classe	Obblig.	NEd	Mx,Ed	Mx,Eff,Ed	Mb,Rd,x	χ,LT	λ adim. LT	L,LT	M,critico	Verifica
100	SLU 97	0.023	1	Si	237.6	-14774.1	-13830.1	598018.7	0.93	0.57	200	2075773.7	Si

Verifica a svergolamento con trazione SLD §4.2.4.1.3.2 NTC18 - §5.5.3 ENV 1993-1-1:1994

X	Comb.	Sfruttamento	Classe	Obblig.	NEd	Mx,Ed	Mx,Eff,Ed	Mb,Rd,x	χ,LT	λ adim. LT	L,LT	M,critico	Verifica
100	SLD 7	0.002	1	Si	103	-1523.6	-1114.4	598018.7	0.93	0.57	200	2075773.7	Si

Verifica di stabilità a taglio anima Y §4.2.4.1.2.4 [4.2.27] NTC18

η	hw	tw	hw/tw max	Verifica
1.2	13.4	0.6	55.46	Si

Verifica di stabilità a taglio anima Y SLD §4.2.4.1.2.4 [4.2.27] NTC18

η	hw	tw	hw/tw max	Verifica
1.2	13.4	0.6	55.46	Si

Verifiche a deformabilità

Mensola X: No; Mensola Y: No.

Frecce lungo X

Ascissa freccia	Combinazione	Freccia	Luce	L/f	L/f,min	Tipo	Verifica
6.7	SLE RA 1	0	200	10000	250	Totale	Si
173.3	SLE RA 31	0	200	10000	250	Totale	Si
20	SLE RA 30	0	200	10000	250	Totale	Si
173.3	SLE RA 29	0	200	10000	250	Totale	Si
6.7	SLE RA 28	0	200	10000	250	Totale	Si
186.7	SLE RA 2	0	200	10000	350	Variabile	Si
186.7	SLE RA 31	0	200	10000	350	Variabile	Si
20	SLE RA 30	0	200	10000	350	Variabile	Si
186.7	SLE RA 29	0	200	10000	350	Variabile	Si
26.7	SLE RA 28	0	200	10000	350	Variabile	Si

Frecce lungo Y

Ascissa freccia	Combinazione	Freccia	Luce	L/f	L/f,min	Tipo	Verifica
100	SLE RA 1	-0.002	200	10000	250	Totale	Si
100	SLE RA 31	-0.013	200	10000	250	Totale	Si
100	SLE RA 30	-0.013	200	10000	250	Totale	Si
100	SLE RA 29	-0.011	200	10000	250	Totale	Si
100	SLE RA 28	-0.011	200	10000	250	Totale	Si
173.3	SLE RA 2	0	200	10000	350	Variabile	Si
100	SLE RA 31	-0.011	200	10000	350	Variabile	Si
100	SLE RA 30	-0.011	200	10000	350	Variabile	Si
100	SLE RA 29	-0.009	200	10000	350	Variabile	Si
100	SLE RA 28	-0.009	200	10000	350	Variabile	Si

Superelemento in acciaio composto dall'asta 184

Caratteristiche del materiale

Acciaio: S275, fyk = 2750

Caratteristiche geometriche

Lunghezza: 200
Nodo iniziale: 108 Nodo finale: 106
Cerniera iniziale: Svincolo: M2, M3 Cerniera finale: Svincolo: M2, M3
Sovraresistenza: 0% Sisma Z: No

Caratteristiche della sezione

Sezione	Rotazione	Area	Jx	Jy	ix	iy	Wx	Wy	Wplx	Wply
HEA160	0	38.82	1674.7	615.62	6.57	3.98	220.36	76.95	245.43	117.67

Verifiche di resistenza

Verifiche a forza assiale §4.2.4.1.2.1 - §4.2.4.1.2.2 NTC18

X	Comb.	Sfruttamento	Classe	NEd	Nc,Rd	Nt,Rd	Riduzione da taglio	ρx	ρy	Verifica
200	SLV 8	0.002	1	-174.5	101662.9		1	0	0	Si

Verifiche a forza assiale SLD §4.2.4.1.2.1 - §4.2.4.1.2.2 NTC18

X	Comb.	Sfruttamento	Classe	NEd	Nc,Rd	Nt,Rd	Riduzione da taglio	ρx	ρy	Verifica
200	SLD 8	0.001	1	-69.3	101662.9		1	0	0	Si

Verifica a taglio Y §4.2.4.1.2.4 NTC18

X	Comb.	Sfruttamento	VEd	Vc,Rd	Av	Interazione taglio-torsione	Riduzione torsione	Verifica
0	SLU 98	0.039	777.3	19989.8	13.26	Considerata	1	Si

Verifica a taglio Y SLD §4.2.4.1.2.4 NTC18

X	Comb.	Sfruttamento	VEd	Vc,Rd	Av	Interazione taglio-torsione	Riduzione torsione	Verifica
200	SLD 16	0.002	-30.5	20011.8	13.26	Considerata	1	Si

Verifica a torsione §4.2.4.1.2.5 NTC18

X	Comb.	Sfruttamento torsione	TEd	TRd	Riduzione taglio resistente	Sfruttamento taglio-torsione	τEd,totale	τRd	Verifica
106.7	SLU 98	0.007	-102.2	14685.6	Considerata				Si

Verifica a torsione SLD §4.2.4.1.2.5 NTC18

X	Comb.	Sfruttamento torsione	TEd	TRd	Riduzione taglio resistente	Sfruttamento taglio-torsione	τEd,totale	τRd	Verifica
200	SLD 16	0.004	-62	14685.6	Considerata				Si

Verifica a flessione semplice X §§ 4.2.4.1.2.3 - 4.2.4.1.2.6 - 4.2.4.1.2.7 - 4.2.4.1.2.8 NTC18

X	Comb.	Sfruttamento	Classe	Mx,Ed	Mx,Rd	Rid. Mx,Rd da VEd	ρx	ρy	Verifica
100	SLU 132	0.06	1	-38808.4	642783.4	1	0	0	Si

Verifica a flessione semplice X SLD §§ 4.2.4.1.2.3 - 4.2.4.1.2.6 - 4.2.4.1.2.7 - 4.2.4.1.2.8 NTC18

X	Comb.	Sfruttamento	Classe	Mx,Ed	Mx,Rd	Rid. Mx,Rd da VEd	ρx	ρy	Verifica
100	SLD 4	0.002	1	-1523.6	642783.4	1	0	0	Si

Verifica a presso/tenso flessione retta X §§ 4.2.4.1.2.3 - 4.2.4.1.2.6 - 4.2.4.1.2.7 - 4.2.4.1.2.8 NTC18

Verifiche eseguite utilizzando la formula conservativa (6.2) §6.2.1 EN 1993-1-1:2005.

X	Comb.	Sfruttamento	Classe	NEd	NRd	Rid. NRd da VEd	Mx,Ed	Mx,Rd	Rid. Mx,Rd da VEd	Rid. Mx,Rd da NEd	ρx	ρy	Verifica
100	SLV 7	0.004	1	-174.5	101662.9	1	-1524	642783	1		0	0	Si

Verifica a presso/tenso flessione retta X SLD §§ 4.2.4.1.2.3 - 4.2.4.1.2.6 - 4.2.4.1.2.7 - 4.2.4.1.2.8 NTC18

Verifiche eseguite utilizzando la formula conservativa (6.2) §6.2.1 EN 1993-1-1:2005.

X	Comb.	Sfruttamento	Classe	NEd	NRd	Rid. NRd da VEd	Mx,Ed	Mx,Rd	Rid. Mx,Rd da VEd	Rid. Mx,Rd da NEd	ρx	ρy	Verifica
100	SLD 7	0.003	1	-69.3	101662.9	1	-1524	642783	1		0	0	Si

Verifiche ad instabilità

Caratteristiche iniziali

Membratura principale per controllo snellezza; Calcolo di snellezze ed N critici condotti secondo gli assi principali;
Curva X: b; Curva Y: c; Svergolamento: Carico all'estradosso; Curva svergolamento: b;

Dati per instabilità attorno a x

Numero rit.	Presente	Ascissa	Campata	βx/m	Vincolo a entrambi estremi	λx/m	λVer
1	Si	0					
			1-2	1	Si	30.4	Si, (<200)
2	Si	200					

Dati per instabilità attorno a y

Numero rit.	Presente	Ascissa	Campata	βy/n	k,LT	kw,LT	Vincolo a entrambi estremi	λy/n	λVer
1	Si	0							
			1-2	1	1	1	Si	50.2	Si, (<200)
2	Si	200							

Verifica a svergolamento §4.2.4.1.3.2 NTC18

X	Comb.	Sfruttamento	Classe	Obblig.	Mx,Ed	Mb,Rd,x	χ,LT	λ adim. LT	L,LT	M,critico	Verifica
100	SLU 132	0.065	1	Si	-38808.4	598018.7	0.93	0.57	200	2075773.7	Si

Verifica a svergolamento SLD §4.2.4.1.3.2 NTC18

X	Comb.	Sfruttamento	Classe	Obblig.	Mx,Ed	Mb,Rd,x	χ,LT	λ adim. LT	L,LT	M,critico	Verifica
100	SLD 4	0.003	1	Si	-1523.6	598018.7	0.93	0.57	200	2075773.7	Si

Verifica a svergolamento con trazione §4.2.4.1.3.2 NTC18 - §5.5.3 ENV 1993-1-1:1994

X	Comb.	Sfruttamento	Classe	Obblig.	NEd	Mx,Ed	Mx,Eff,Ed	Mb,Rd,x	χ,LT	λ adim. LT	L,LT	M,critico	Verifica
100	SLV 2	0.002	1	Si	45.7	-1523.6	-1342	598018.7	0.93	0.57	200	2075773.7	Si

Verifica a svergolamento con trazione SLD §4.2.4.1.3.2 NTC18 - §5.5.3 ENV 1993-1-1:1994

X	Comb.	Sfruttamento	Classe	Obblig.	NEd	Mx,Ed	Mx,Eff,Ed	Mb,Rd,x	χ,LT	λ adim. LT	L,LT	M,critico	Verifica
100	SLD 6	0.002	1	Si	59.1	-1523.6	-1288.6	598018.7	0.93	0.57	200	2075773.7	Si

Verifica di stabilità per pressoflessione §C.4.2.4.1.3.3.2 NTC18

X	Comb.	Sfruttamento	Classe	NEd	NRk	Mx,Ed max	Mx,Rk	My,Ed max	My,Rk	χ,x	χ,y	kxx	kxy	kyx	kyy	χ,LT	Verifica
200	SLV 8	0.005	1	-174.5	106746.1	1523.6	674922.6	0	323595.1	0.945	0.798	0.95	0.36	1	0.601	0.93	Si

Verifica di stabilità per pressoflessione SLD §C.4.2.4.1.3.3.2 NTC18

X	Comb.	Sfruttamento	Classe	NEd	NRk	Mx,Ed max	Mx,Rk	My,Ed max	My,Rk	χ,x	χ,y	kxx	kxy	kyx	kyy	χ,LT	Verifica
0	SLD 7	0.003	1	-69.3	106746.1	1523.6	674922.6	0	323595.1	0.945	0.798	0.95	0.36	1	0.6	0.93	Si

Verifica di stabilità a taglio anima Y §4.2.4.1.2.4 [4.2.27] NTC18

η	hw	tw	hw/tw max	Verifica
1.2	13.4	0.6	55.46	Si

Verifica di stabilità a taglio anima Y SLD §4.2.4.1.2.4 [4.2.27] NTC18

η	hw	tw	hw/tw max	Verifica
1.2	13.4	0.6	55.46	Si

Verifiche a deformabilità

Mensola X: No; Mensola Y: No.

Frecce lungo X

Ascissa freccia	Combinazione	Freccia	Luce	L/f	L/f,min	Tipo	Verifica
173.3	SLE RA 1	0	200	10000	250	Totale	Si
173.3	SLE RA 31	0	200	10000	250	Totale	Si
173.3	SLE RA 30	0	200	10000	250	Totale	Si
173.3	SLE RA 29	0	200	10000	250	Totale	Si
173.3	SLE RA 28	0	200	10000	250	Totale	Si
26.7	SLE RA 2	0	200	10000	350	Variabile	Si
20	SLE RA 31	0	200	10000	350	Variabile	Si
20	SLE RA 30	0	200	10000	350	Variabile	Si
33.3	SLE RA 29	0	200	10000	350	Variabile	Si
113.3	SLE RA 28	0	200	10000	350	Variabile	Si

Frecce lungo Y

Ascissa freccia	Combinazione	Freccia	Luce	L/f	L/f,min	Tipo	Verifica
100	SLE RA 32	-0.035	200	5780.2	250	Totale	Si
100	SLE RA 33	-0.035	200	5780.2	250	Totale	Si
100	SLE RA 24	-0.031	200	6516.8	250	Totale	Si
100	SLE RA 25	-0.031	200	6516.8	250	Totale	Si
100	SLE RA 30	-0.031	200	6537.6	250	Totale	Si
100	SLE RA 32	-0.033	200	6138.9	350	Variabile	Si
100	SLE RA 33	-0.033	200	6138.9	350	Variabile	Si
100	SLE RA 24	-0.029	200	6976.4	350	Variabile	Si
100	SLE RA 25	-0.029	200	6976.4	350	Variabile	Si
100	SLE RA 30	-0.029	200	7000.2	350	Variabile	Si

Superelemento in acciaio composto dall'asta 185

Caratteristiche del materiale

Acciaio: S275, fyk = 2750

Caratteristiche geometriche

Lunghezza: 200
Nodo iniziale: 107 Nodo finale: 105
Cerniera iniziale: Svincolo: M2, M3 Cerniera finale: Svincolo: M2, M3
Sovraresistenza: 0% Sisma Z: No

Caratteristiche della sezione

Sezione	Rotazione	Area	Jx	Jy	ix	iy	Wx	Wy	Wplx	Wply
HEA160	0	38.82	1674.7	615.62	6.57	3.98	220.36	76.95	245.43	117.67

Verifiche di resistenza

Verifiche a forza assiale §4.2.4.1.2.1 - §4.2.4.1.2.2 NTC18

X	Comb.	Sfruttamento	Classe	NEd	Nc,Rd	Nt,Rd	Riduzione da taglio	ρx	ρy	Verifica
93.3	SLV 12	0.002	1	-174.5	101662.9		1	0	0	Si

Verifiche a forza assiale SLD §4.2.4.1.2.1 - §4.2.4.1.2.2 NTC18

X	Comb.	Sfruttamento	Classe	NEd	Nc,Rd	Nt,Rd	Riduzione da taglio	ρx	ρy	Verifica
200	SLD 12	0.001	1	-69.3	101662.9		1	0	0	Si

Verifica a taglio Y §4.2.4.1.2.4 NTC18

X	Comb.	Sfruttamento	VEd	Vc,Rd	Av	Interazione taglio-torsione	Riduzione torsione	Verifica
200	SLU 98	0.039	-786.3	19989.7	13.26	Considerata	1	Si

Verifica a taglio Y SLD §4.2.4.1.2.4 NTC18

X	Comb.	Sfruttamento	VEd	Vc,Rd	Av	Interazione taglio-torsione	Riduzione torsione	Verifica
200	SLD 4	0.002	-30.5	20011.8	13.26	Considerata	1	Si

Verifica a torsione §4.2.4.1.2.5 NTC18

X	Comb.	Sfruttamento torsione	TEd	TRd	Riduzione taglio resistente	Sfruttamento taglio-torsione	τEd,totale	τRd	Verifica
200	SLU 131	0.007	102.2	14685.6	Considerata				Si

Verifica a torsione SLD §4.2.4.1.2.5 NTC18

X	Comb.	Sfruttamento torsione	TEd	TRd	Riduzione taglio resistente	Sfruttamento taglio-torsione	τEd,totale	τRd	Verifica
200	SLD 3	0.004	62	14685.6	Considerata				Si

Verifica a flessione semplice X §§ 4.2.4.1.2.3 - 4.2.4.1.2.6 - 4.2.4.1.2.7 - 4.2.4.1.2.8 NTC18

X	Comb.	Sfruttamento	Classe	Mx,Ed	Mx,Rd	Rid. Mx,Rd da VEd	ρx	ρy	Verifica
100	SLU 99	0.061	1	-39314.5	642783.4	1	0	0	Si

Verifica a flessione semplice X SLD §§ 4.2.4.1.2.3 - 4.2.4.1.2.6 - 4.2.4.1.2.7 - 4.2.4.1.2.8 NTC18

X	Comb.	Sfruttamento	Classe	Mx,Ed	Mx,Rd	Rid. Mx,Rd da VEd	ρx	ρy	Verifica
100	SLD 13	0.002	1	-1523.6	642783.4	1	0	0	Si

Verifica a presso/tenso flessione retta X §§ 4.2.4.1.2.3 - 4.2.4.1.2.6 - 4.2.4.1.2.7 - 4.2.4.1.2.8 NTC18

Verifiche eseguite utilizzando la formula conservativa (6.2) §6.2.1 EN 1993-1-1:2005.

X	Comb.	Sfruttamento	Classe	NEd	NRd	Rid. NRd da VEd	Mx,Ed	Mx,Rd	Rid. Mx,Rd da VEd	Rid. Mx,Rd da NEd	ρx	ρy	Verifica
100	SLV 11	0.004	1	-174.5	101662.9	1	-1524	642783	1		0	0	Si

Verifica a presso/tenso flessione retta X SLD §§ 4.2.4.1.2.3 - 4.2.4.1.2.6 - 4.2.4.1.2.7 - 4.2.4.1.2.8 NTC18

Verifiche eseguite utilizzando la formula conservativa (6.2) §6.2.1 EN 1993-1-1:2005.

X	Comb.	Sfruttamento	Classe	NEd	NRd	Rid. NRd da VEd	Mx,Ed	Mx,Rd	Rid. Mx,Rd da VEd	Rid. Mx,Rd da NEd	ρx	ρy	Verifica
100	SLD 12	0.003	1	-69.3	101662.9	1	-1524	642783	1		0	0	Si

Verifiche ad instabilità

Caratteristiche iniziali

Membratura principale per controllo snellezza; Calcolo di snellezze ed N critici condotti secondo gli assi principali;

Curva X: b; Curva Y: c; Svergolamento: Carico all'estradosso; Curva svergolamento: b;

Dati per instabilità attorno a x

Numero rit.	Presente	Ascissa	Campata	βx/m	Vincolo a entrambi estremi	λx/m	λVer
1	Si	0					
			1-2	1	Si	30.4	Si, (<200)
2	Si	200					

Dati per instabilità attorno a y

Numero rit.	Presente	Ascissa	Campata	βy/n	k,LT	kw,LT	Vincolo a entrambi estremi	λy/n	λVer
1	Si	0							
			1-2	1	1	1	Si	50.2	Si, (<200)
2	Si	200							

Verifica a svergolamento §4.2.4.1.3.2 NTC18

X	Comb.	Sfruttamento	Classe	Obblig.	Mx,Ed	Mb,Rd,x	χ,LT	λ adim. LT	L,LT	M,critico	Verifica
100	SLU 132	0.066	1	Si	-39314.5	598018.7	0.93	0.57	200	2075773.7	Si

Verifica a svergolamento SLD §4.2.4.1.3.2 NTC18

X	Comb.	Sfruttamento	Classe	Obblig.	Mx,Ed	Mb,Rd,x	χ,LT	λ adim. LT	L,LT	M,critico	Verifica
100	SLD 13	0.003	1	Si	-1523.6	598018.7	0.93	0.57	200	2075773.7	Si

Verifica a svergolamento con trazione §4.2.4.1.3.2 NTC18 - §5.5.3 ENV 1993-1-1:1994

X	Comb.	Sfruttamento	Classe	Obblig.	NEd	Mx,Ed	Mx,Eff,Ed	Mb,Rd,x	χ,LT	λ adim. LT	L,LT	M,critico	Verifica
100	SLV 13	0.002	1	Si	45.7	-1523.6	-1342	598018.7	0.93	0.57	200	2075773.7	Si

Verifica a svergolamento con trazione SLD §4.2.4.1.3.2 NTC18 - §5.5.3 ENV 1993-1-1:1994

X	Comb.	Sfruttamento	Classe	Obblig.	NEd	Mx,Ed	Mx,Eff,Ed	Mb,Rd,x	χ,LT	λ adim. LT	L,LT	M,critico	Verifica
100	SLD 9	0.002	1	Si	59.1	-1523.6	-1288.6	598018.7	0.93	0.57	200	2075773.7	Si

Verifica di stabilità per pressoflessione §C.4.2.4.1.3.3.2 NTC18

X	Comb.	Sfruttamento	Classe	NEd	NRk	Mx,Ed max	Mx,Rk	My,Ed max	My,Rk	χ,x	χ,y	kxx	kxy	kyx	kyy	χ,LT	Verifica
186.7	SLV 12	0.005	1	-174.5	106746.1	1523.6	674922.6	0	323595.1	0.945	0.798	0.95	0.36	1	0.601	0.93	Si

Verifica di stabilità per pressoflessione SLD §C.4.2.4.1.3.3.2 NTC18

X	Comb.	Sfruttamento	Classe	NEd	NRk	Mx,Ed max	Mx,Rk	My,Ed max	My,Rk	χ,x	χ,y	kxx	kxy	kyx	kyy	χ,LT	Verifica
200	SLD 12	0.003	1	-69.3	106746.1	1523.6	674922.6	0	323595.1	0.945	0.798	0.95	0.36	1	0.6	0.93	Si

Verifica di stabilità a taglio anima Y §4.2.4.1.2.4 [4.2.27] NTC18

η	hw	tw	hw/tw max	Verifica
1.2	13.4	0.6	55.46	Si

Verifica di stabilità a taglio anima Y SLD §4.2.4.1.2.4 [4.2.27] NTC18

η	hw	tw	hw/tw max	Verifica
1.2	13.4	0.6	55.46	Si

Verifiche a deformabilità

Mensola X: No; Mensola Y: No.

Frecce lungo X

Ascissa freccia	Combinazione	Freccia	Luce	L/f	L/f,min	Tipo	Verifica
173.3	SLE RA 1	0	200	10000	250	Totale	Si
153.3	SLE RA 31	0	200	10000	250	Totale	Si
153.3	SLE RA 30	0	200	10000	250	Totale	Si
33.3	SLE RA 29	0	200	10000	250	Totale	Si
173.3	SLE RA 28	0	200	10000	250	Totale	Si
26.7	SLE RA 2	0	200	10000	350	Variabile	Si
66.7	SLE RA 31	0	200	10000	350	Variabile	Si
186.7	SLE RA 30	0	200	10000	350	Variabile	Si
33.3	SLE RA 29	0	200	10000	350	Variabile	Si
186.7	SLE RA 28	0	200	10000	350	Variabile	Si

Frecce lungo Y

Ascissa freccia	Combinazione	Freccia	Luce	L/f	L/f,min	Tipo	Verifica
100	SLE RA 32	-0.035	200	5706.3	250	Totale	Si
100	SLE RA 33	-0.035	200	5706.3	250	Totale	Si
100	SLE RA 30	-0.031	200	6443.3	250	Totale	Si
100	SLE RA 31	-0.031	200	6443.3	250	Totale	Si
100	SLE RA 24	-0.031	200	6450.1	250	Totale	Si
100	SLE RA 32	-0.033	200	6055.7	350	Variabile	Si
100	SLE RA 33	-0.033	200	6055.7	350	Variabile	Si
100	SLE RA 30	-0.029	200	6892.2	350	Variabile	Si
100	SLE RA 31	-0.029	200	6892.2	350	Variabile	Si
100	SLE RA 24	-0.029	200	6899.9	350	Variabile	Si

Superelemento in acciaio composto dall'asta 186

Caratteristiche del materiale

Acciaio: S275, fyk = 2750

Caratteristiche geometriche

Lunghezza: 200
Nodo iniziale: 121 Nodo finale: 120
Cerniera iniziale: Svincolo: M2, M3 Cerniera finale: Svincolo: M2, M3

Sovraresistenza: 0% Sisma Z: No

Caratteristiche della sezione

Sezione	Rotazione	Area	Jx	Jy	ix	iy	Wx	Wy	Wplx	Wply
HEA160	0	38.82	1674.7	615.62	6.57	3.98	220.36	76.95	245.43	117.67

Verifiche di resistenza

Verifiche a forza assiale §4.2.4.1.2.1 - §4.2.4.1.2.2 NTC18

X	Comb.	Sfruttamento	Classe	NEd	Nc,Rd	Nt,Rd	Riduzione da taglio	ρx	ρy	Verifica
200	SLV 8	0.008		832.6		101662.9	1	0	0	Si

Verifiche a forza assiale SLD §4.2.4.1.2.1 - §4.2.4.1.2.2 NTC18

X	Comb.	Sfruttamento	Classe	NEd	Nc,Rd	Nt,Rd	Riduzione da taglio	ρx	ρy	Verifica
200	SLD 8	0.003		316.2		101662.9	1	0	0	Si

Verifica a taglio Y §4.2.4.1.2.4 NTC18

X	Comb.	Sfruttamento	VEd	Vc,Rd	Av	Interazione taglio-torsione	Riduzione torsione	Verifica
0	SLU 132	0.059	1174.7	20045.7	13.26	Considerata	1	Si

Verifica a taglio Y SLD §4.2.4.1.2.4 NTC18

X	Comb.	Sfruttamento	VEd	Vc,Rd	Av	Interazione taglio-torsione	Riduzione torsione	Verifica
200	SLD 16	0.002	-30.5	20033.2	13.26	Considerata	1	Si

Verifica a torsione §4.2.4.1.2.5 NTC18

X	Comb.	Sfruttamento torsione	TEd	TRd	Riduzione taglio resistente	Sfruttamento taglio-torsione	τEd,totale	τRd	Verifica
200	SLV 16	0.003	-50.7	14685.6	Considerata				Si

Verifica a torsione SLD §4.2.4.1.2.5 NTC18

X	Comb.	Sfruttamento torsione	TEd	TRd	Riduzione taglio resistente	Sfruttamento taglio-torsione	τEd,totale	τRd	Verifica
200	SLD 16	0.002	-22.7	14685.6	Considerata				Si

Verifica a flessione semplice X §§ 4.2.4.1.2.3 - 4.2.4.1.2.6 - 4.2.4.1.2.7 - 4.2.4.1.2.8 NTC18

X	Comb.	Sfruttamento	Classe	Mx,Ed	Mx,Rd	Rid. Mx,Rd da VEd	ρx	ρy	Verifica
100	SLU 132	0.091	1	-58735.3	642783.4	1	0	0	Si

Verifica a presso/tenso flessione retta X §§ 4.2.4.1.2.3 - 4.2.4.1.2.6 - 4.2.4.1.2.7 - 4.2.4.1.2.8 NTC18

Verifiche eseguite utilizzando la formula conservativa (6.2) §6.2.1 EN 1993-1-1:2005.

X	Comb.	Sfruttamento	Classe	NEd	NRd	Rid. NRd da VEd	Mx,Ed	Mx,Rd	Rid. Mx,Rd da VEd	Rid. Mx,Rd da NEd	ρx	ρy	Verifica
100	SLV 8	0.011	1	832.6	101662.9	1	-1524	642783	1		0	0	Si

Verifica a presso/tenso flessione retta X SLD §§ 4.2.4.1.2.3 - 4.2.4.1.2.6 - 4.2.4.1.2.7 - 4.2.4.1.2.8 NTC18

Verifiche eseguite utilizzando la formula conservativa (6.2) §6.2.1 EN 1993-1-1:2005.

X	Comb.	Sfruttamento	Classe	NEd	NRd	Rid. NRd da VEd	Mx,Ed	Mx,Rd	Rid. Mx,Rd da VEd	Rid. Mx,Rd da NEd	ρx	ρy	Verifica
100	SLD 8	0.005	1	316.2	101662.9	1	-1524	642783	1		0	0	Si

Verifiche ad instabilità

Caratteristiche iniziali

Membratura principale per controllo snellezza; Calcolo di snellezze ed N critici condotti secondo gli assi principali;
Curva X: b; Curva Y: c; Svergolamento: Carico all'estradosso; Curva svergolamento: b;

Dati per instabilità attorno a x

Numero rit.	Presente	Ascissa	Campata	βx/m	Vincolo a entrambi estremi	λx/m	λVer
1	Si	0					
			1-2	1	Si	30.4	Si, (<200)
2	Si	200					

Dati per instabilità attorno a y

Numero rit.	Presente	Ascissa	Campata	βy/n	k,LT	kw,LT	Vincolo a entrambi estremi	λy/n	λVer
1	Si	0							
			1-2	1	1	1	Si	50.2	Si, (<200)
2	Si	200							

Verifica a svergolamento §4.2.4.1.3.2 NTC18

X	Comb.	Sfruttamento	Classe	Obblig.	Mx,Ed	Mb,Rd,x	χ,LT	λ adim. LT	L,LT	M,critico	Verifica
100	SLU 132	0.098	1	Si	-58735.3	598018.7	0.93	0.57	200	2075773.7	Si

Verifica a svergolamento con trazione §4.2.4.1.3.2 NTC18 - §5.5.3 ENV 1993-1-1:1994

X	Comb.	Sfruttamento	Classe	Obblig.	NEd	Mx,Ed	Mx,Eff,Ed	Mb,Rd,x	χ,LT	λ adim. LT	L,LT	M,critico	Verifica
100	SLV 16	0.001	1	Si	250.4	-1523.6	-528.5	598018.7	0.93	0.57	200	2075773.7	Si

Verifica a svergolamento con trazione SLD §4.2.4.1.3.2 NTC18 - §5.5.3 ENV 1993-1-1:1994

X	Comb.	Sfruttamento	Classe	Obblig.	NEd	Mx,Ed	Mx,Eff,Ed	Mb,Rd,x	χ,LT	λ adim. LT	L,LT	M,critico	Verifica
100	SLD 16	0.002	1	Si	95.5	-1523.6	-1144.1	598018.7	0.93	0.57	200	2075773.7	Si

Verifica di stabilità per pressoflessione §C.4.2.4.1.3.3.2 NTC18

X	Comb.	Sfruttamento	Classe	NEd	NRk	Mx,Ed max	Mx,Rk	My,Ed max	My,Rk	χ,x	χ,y	kxx	kxy	kyx	kyy	χ,LT	Verifica
186.7	SLV 10	0.013	1	-830.8	106746.1	1523.6	674922.6	0	323595.1	0.945	0.798	0.951	0.362	0.999	0.603	0.93	Si

Verifica di stabilità per pressoflessione SLD §C.4.2.4.1.3.3.2 NTC18

X	Comb.	Sfruttamento	Classe	NEd	NRk	Mx,Ed max	Mx,Rk	My,Ed max	My,Rk	χ,x	χ,y	kxx	kxy	kyx	kyy	χ,LT	Verifica
186.7	SLD 10	0.006	1	-314.4	106746.1	1523.6	674922.6	0	323595.1	0.945	0.798	0.95	0.361	1	0.601	0.93	Si

Verifica di stabilità a taglio anima Y §4.2.4.1.2.4 [4.2.27] NTC18

η	hw	tw	hw/tw max	Verifica
1.2	13.4	0.6	55.46	Si

Verifica di stabilità a taglio anima Y SLD §4.2.4.1.2.4 [4.2.27] NTC18

η	hw	tw	hw/tw max	Verifica
1.2	13.4	0.6	55.46	Si

Verifiche a deformabilità

Mensola X: No; Mensola Y: No.

Frecce lungo X

Ascissa freccia	Combinazione	Freccia	Luce	L/f	L/f,min	Tipo	Verifica
100	SLE RA 1	0	200	10000	250	Totale	Si
6.7	SLE RA 31	0	200	10000	250	Totale	Si
6.7	SLE RA 30	0	200	10000	250	Totale	Si
6.7	SLE RA 29	0	200	10000	250	Totale	Si
6.7	SLE RA 28	0	200	10000	250	Totale	Si
133.3	SLE RA 2	0	200	10000	350	Variabile	Si
6.7	SLE RA 31	0	200	10000	350	Variabile	Si
6.7	SLE RA 30	0	200	10000	350	Variabile	Si
6.7	SLE RA 29	0	200	10000	350	Variabile	Si
6.7	SLE RA 28	0	200	10000	350	Variabile	Si

Frecce lungo Y

Ascissa freccia	Combinazione	Freccia	Luce	L/f	L/f,min	Tipo	Verifica
100	SLE RA 33	-0.052	200	3829.3	250	Totale	Si
100	SLE RA 32	-0.052	200	3829.3	250	Totale	Si
100	SLE RA 25	-0.049	200	4102.8	250	Totale	Si
100	SLE RA 24	-0.049	200	4102.8	250	Totale	Si
100	SLE RA 21	-0.047	200	4243.7	250	Totale	Si
100	SLE RA 33	-0.05	200	3983.5	350	Variabile	Si
100	SLE RA 32	-0.05	200	3983.5	350	Variabile	Si
100	SLE RA 25	-0.047	200	4280.3	350	Variabile	Si
100	SLE RA 24	-0.047	200	4280.3	350	Variabile	Si
100	SLE RA 21	-0.045	200	4433.9	350	Variabile	Si

Superelemento in acciaio composto dall'asta 187

Caratteristiche del materiale

Acciaio: S275, fyk = 2750

Caratteristiche geometriche

Lunghezza: 200
Nodo iniziale: 84 Nodo finale: 82
Cerniera iniziale: Svincolo: M2, M3 Cerniera finale: Svincolo: M2, M3
Sovraresistenza: 0% Sisma Z: No

Caratteristiche della sezione

Sezione	Rotazione	Area	Jx	Jy	ix	iy	Wx	Wy	Wplx	Wply
HEA220	0	64.41	5414.71	1954.65	9.17	5.51	515.69	177.7	569.03	270.66

Verifiche di resistenza

Verifica a taglio Y §4.2.4.1.2.4 NTC18

X	Comb.	Sfruttamento	VEd	Vc,Rd	Av	Interazione taglio-torsione	Riduzione torsione	Verifica
200	SLU 72	0.037	-1168.5	31302.8	20.74	Considerata	1	Si

Verifica a taglio Y SLD §4.2.4.1.2.4 NTC18

X	Comb.	Sfruttamento	VEd	Vc,Rd	Av	Interazione taglio-torsione	Riduzione torsione	Verifica
200	SLD 2	0.002	-50.6	31355.9	20.74	Considerata	1	Si

Verifica a torsione §4.2.4.1.2.5 NTC18

X	Comb.	Sfruttamento torsione	TEd	TRd	Riduzione taglio resistente	Sfruttamento taglio-torsione	τEd,totale	τRd	Verifica
200	SLU 105	0.004	126.1	29789.6	Considerata				Si

Verifica a flessione semplice X §§ 4.2.4.1.2.3 - 4.2.4.1.2.6 - 4.2.4.1.2.7 - 4.2.4.1.2.8 NTC18

X	Comb.	Sfruttamento	Classe	Mx,Ed	Mx,Rd	Rid. Mx,Rd da VEd	ρx	ρy	Verifica
100	SLU 105	0.039	1	-58425	1490312.5	1	0	0	Si

Verifica a flessione semplice X SLD §§ 4.2.4.1.2.3 - 4.2.4.1.2.6 - 4.2.4.1.2.7 - 4.2.4.1.2.8 NTC18

X	Comb.	Sfruttamento	Classe	Mx,Ed	Mx,Rd	Rid. Mx,Rd da VEd	ρx	ρy	Verifica
100	SLD 15	0.002	1	-2528	1490312.5	1	0	0	Si

Verifiche ad instabilità

Caratteristiche iniziali

Membratura principale per controllo snellezza; Calcolo di snellezze ed N critici condotti secondo gli assi principali;
Curva X: b; Curva Y: c; Svergolamento: Carico all'estradosso; Curva svergolamento: b;

Dati per instabilità attorno a x

Numero rit.	Presente	Ascissa	Campata	βx/m	Vincolo a entrambi estremi	λx/m	λVer
1	Si	0					
			1-2	1	Si	21.8	Si, (<200)
2	Si	200					

Dati per instabilità attorno a y

Numero rit.	Presente	Ascissa	Campata	βy/n	k,LT	kw,LT	Vincolo a entrambi estremi	λy/n	λVer
1	Si	0							
			1-2	1	1	1	Si	36.3	Si, (<200)
2	Si	200							

Verifica a svergolamento §4.2.4.1.3.2 NTC18

X	Comb.	Sfruttamento	Classe	Obblig.	Mx,Ed	Mb,Rd,x	χ,LT	λ adim. LT	L,LT	M,critico	Verifica
100	SLU 105	0.04	1	Si	-58425	1465861.3	0.984	0.442	200	8010168.9	Si

Verifica a svergolamento SLD §4.2.4.1.3.2 NTC18

X	Comb.	Sfruttamento	Classe	Obblig.	Mx,Ed	Mb,Rd,x	χ,LT	λ adim. LT	L,LT	M,critico	Verifica
100	SLD 15	0.002	1	Si	-2528	1465861.3	0.984	0.442	200	8010168.9	Si

Verifica di stabilità a taglio anima Y §4.2.4.1.2.4 [4.2.27] NTC18

η	hw	tw	hw/tw max	Verifica
1.2	18.8	0.7	55.46	Si

Verifica di stabilità a taglio anima Y SLD §4.2.4.1.2.4 [4.2.27] NTC18

η	hw	tw	hw/tw max	Verifica
1.2	18.8	0.7	55.46	Si

Verifiche a deformabilità

Mensola X: No; Mensola Y: No.

Frecce lungo X

Ascissa freccia	Combinazione	Freccia	Luce	L/f	L/f,min	Tipo	Verifica
6.7	SLE RA 1	0	200	10000	250	Totale	Si
193.3	SLE RA 31	0	200	10000	250	Totale	Si
6.7	SLE RA 30	0	200	10000	250	Totale	Si
193.3	SLE RA 29	0	200	10000	250	Totale	Si
6.7	SLE RA 28	0	200	10000	250	Totale	Si
193.3	SLE RA 2	0	200	10000	350	Variabile	Si
193.3	SLE RA 31	0	200	10000	350	Variabile	Si
93.3	SLE RA 30	0	200	10000	350	Variabile	Si
193.3	SLE RA 29	0	200	10000	350	Variabile	Si
53.3	SLE RA 28	0	200	10000	350	Variabile	Si

Frecce lungo Y

Ascissa freccia	Combinazione	Freccia	Luce	L/f	L/f,min	Tipo	Verifica
100	SLE RA 1	-0.001	200	10000	250	Totale	Si
100	SLE RA 31	-0.014	200	10000	250	Totale	Si
100	SLE RA 30	-0.002	200	10000	250	Totale	Si
100	SLE RA 29	-0.013	200	10000	250	Totale	Si
100	SLE RA 28	-0.001	200	10000	250	Totale	Si
100	SLE RA 2	-0.016	200	10000	350	Variabile	Si
100	SLE RA 31	-0.013	200	10000	350	Variabile	Si
100	SLE RA 30	-0.001	200	10000	350	Variabile	Si
100	SLE RA 29	-0.012	200	10000	350	Variabile	Si
26.7	SLE RA 28	0	200	10000	350	Variabile	Si

Superelemento in acciaio composto dall'asta 188

Caratteristiche del materiale

Acciaio: S275, fyk = 2750

Caratteristiche geometriche

Lunghezza: 200
Nodo iniziale: 83 Nodo finale: 81
Cerniera iniziale: Svincolo: M2, M3 Cerniera finale: Svincolo: M2, M3
Sovraresistenza: 0% Sisma Z: No

Caratteristiche della sezione

Sezione	Rotazione	Area	Jx	Jy	ix	iy	Wx	Wy	Wplx	Wply
HEA220	0	64.41	5414.71	1954.65	9.17	5.51	515.69	177.7	569.03	270.66

Verifiche di resistenza

Verifica a taglio Y §4.2.4.1.2.4 NTC18

X	Comb.	Sfruttamento	VEd	Vc,Rd	Av	Interazione taglio-torsione	Riduzione torsione	Verifica
200	SLU 72	0.037	-1168.5	31302.8	20.74	Considerata	1	Si

Verifica a taglio Y SLD §4.2.4.1.2.4 NTC18

X	Comb.	Sfruttamento	VEd	Vc,Rd	Av	Interazione taglio-torsione	Riduzione torsione	Verifica
0	SLD 1	0.002	50.6	31355.9	20.74	Considerata	1	Si

Verifica a torsione §4.2.4.1.2.5 NTC18

X	Comb.	Sfruttamento torsione	TEd	TRd	Riduzione taglio resistente	Sfruttamento taglio-torsione	τEd,totale	τRd	Verifica
93.3	SLU 101	0.004	-126	29789.6	Considerata				Si

Verifica a flessione semplice X §§ 4.2.4.1.2.3 - 4.2.4.1.2.6 - 4.2.4.1.2.7 - 4.2.4.1.2.8 NTC18

X	Comb.	Sfruttamento	Classe	Mx,Ed	Mx,Rd	Rid. Mx,Rd da VEd	ρx	ρy	Verifica
100	SLU 105	0.039	1	-58425	1490312.5	1	0	0	Si

Verifica a flessione semplice X SLD §§ 4.2.4.1.2.3 - 4.2.4.1.2.6 - 4.2.4.1.2.7 - 4.2.4.1.2.8 NTC18

X	Comb.	Sfruttamento	Classe	Mx,Ed	Mx,Rd	Rid. Mx,Rd da VEd	ρx	ρy	Verifica
100	SLD 2	0.002	1	-2528	1490312.5	1	0	0	Si

Verifiche ad instabilità

Caratteristiche iniziali

Membratura principale per controllo snellezza; Calcolo di snellezze ed N critici condotti secondo gli assi principali;
Curva X: b; Curva Y: c; Svergolamento: Carico all'estradosso; Curva svergolamento: b;

Dati per instabilità attorno a x

Numero rit.	Presente	Ascissa	Campata	βx/m	Vincolo a entrambi estremi	λx/m	λVer
1	Si	0					
			1-2	1	Si	21.8	Si, (<200)
2	Si	200					

Dati per instabilità attorno a y

Numero rit.	Presente	Ascissa	Campata	βy/n	k,LT	kw,LT	Vincolo a entrambi estremi	λy/n	λVer
1	Si	0							
			1-2	1	1	1	Si	36.3	Si, (<200)
2	Si	200							

Verifica a svergolamento §4.2.4.1.3.2 NTC18

X	Comb.	Sfruttamento	Classe	Obblig.	Mx,Ed	Mb,Rd,x	χ,LT	λ adim. LT	L,LT	M,critico	Verifica
100	SLU 105	0.04	1	Si	-58425	1465861.3	0.984	0.442	200	8010168.9	Si

Verifica a svergolamento SLD §4.2.4.1.3.2 NTC18

X	Comb.	Sfruttamento	Classe	Obblig.	Mx,Ed	Mb,Rd,x	χ,LT	λ adim. LT	L,LT	M,critico	Verifica
100	SLD 2	0.002	1	Si	-2528	1465861.3	0.984	0.442	200	8010168.9	Si

Verifica di stabilità a taglio anima Y §4.2.4.1.2.4 [4.2.27] NTC18

η	hw	tw	hw/tw max	Verifica
1.2	18.8	0.7	55.46	Si

Verifica di stabilità a taglio anima Y SLD §4.2.4.1.2.4 [4.2.27] NTC18

η	hw	tw	hw/tw max	Verifica
1.2	18.8	0.7	55.46	Si

Verifiche a deformabilità

Mensola X: No; Mensola Y: No.

Frecce lungo X

Ascissa freccia	Combinazione	Freccia	Luce	L/f	L/f,min	Tipo	Verifica
6.7	SLE RA 1	0	200	10000	250	Totale	Si
193.3	SLE RA 31	0	200	10000	250	Totale	Si
6.7	SLE RA 30	0	200	10000	250	Totale	Si
193.3	SLE RA 29	0	200	10000	250	Totale	Si
6.7	SLE RA 28	0	200	10000	250	Totale	Si
193.3	SLE RA 2	0	200	10000	350	Variabile	Si
193.3	SLE RA 31	0	200	10000	350	Variabile	Si
180	SLE RA 30	0	200	10000	350	Variabile	Si
193.3	SLE RA 29	0	200	10000	350	Variabile	Si
6.7	SLE RA 28	0	200	10000	350	Variabile	Si

Frecce lungo Y

Ascissa freccia	Combinazione	Freccia	Luce	L/f	L/f,min	Tipo	Verifica
100	SLE RA 1	-0.001	200	10000	250	Totale	Si
100	SLE RA 31	-0.014	200	10000	250	Totale	Si
100	SLE RA 30	-0.002	200	10000	250	Totale	Si
100	SLE RA 29	-0.013	200	10000	250	Totale	Si
100	SLE RA 28	-0.001	200	10000	250	Totale	Si
100	SLE RA 2	-0.016	200	10000	350	Variabile	Si
100	SLE RA 31	-0.013	200	10000	350	Variabile	Si
100	SLE RA 30	-0.001	200	10000	350	Variabile	Si
100	SLE RA 29	-0.012	200	10000	350	Variabile	Si
26.7	SLE RA 28	0	200	10000	350	Variabile	Si

Superelemento in acciaio composto dall'asta 189

Caratteristiche del materiale

Acciaio: S275, fyk = 2750

Caratteristiche geometriche

Lunghezza: 200
Nodo iniziale: 56 Nodo finale: 52
Cerniera iniziale: Svincolo: M2, M3 Cerniera finale: Svincolo: M2, M3
Sovraresistenza: 0% Sisma Z: No

Caratteristiche della sezione

Sezione	Rotazione	Area	Jx	Jy	ix	iy	Wx	Wy	Wplx	Wply
HEA220	0	64.41	5414.71	1954.65	9.17	5.51	515.69	177.7	569.03	270.66

Verifiche di resistenza

Verifiche a forza assiale §4.2.4.1.2.1 - §4.2.4.1.2.2 NTC18

X	Comb.	Sfruttamento	Classe	NEd	Nc,Rd	Nt,Rd	Riduzione da taglio	ρx	ρy	Verifica
93.3	SLV 6	0.001		147.7		168683.8	1	0	0	Si

Verifiche a forza assiale SLD §4.2.4.1.2.1 - §4.2.4.1.2.2 NTC18

X	Comb.	Sfruttamento	Classe	NEd	Nc,Rd	Nt,Rd	Riduzione da taglio	ρx	ρy	Verifica
200	SLD 6	0.001		105.2		168683.8	1	0	0	Si

Verifica a taglio Y §4.2.4.1.2.4 NTC18

X	Comb.	Sfruttamento	VEd	Vc,Rd	Av	Interazione taglio-torsione	Riduzione torsione	Verifica
200	SLU 72	0.025	-798.2	31347.2	20.74	Considerata	1	Si

Verifica a taglio Y SLD §4.2.4.1.2.4 NTC18

X	Comb.	Sfruttamento	VEd	Vc,Rd	Av	Interazione taglio-torsione	Riduzione torsione	Verifica
0	SLD 1	0.002	50.6	31355.9	20.74	Considerata	1	Si

Verifica a torsione §4.2.4.1.2.5 NTC18

X	Comb.	Sfruttamento torsione	TEd	TRd	Riduzione taglio resistente	Sfruttamento taglio-torsione	τEd,totale	τRd	Verifica
80	SLU 72	0.001	20.6	29789.6	Considerata				Si

Verifica a flessione semplice X §§ 4.2.4.1.2.3 - 4.2.4.1.2.6 - 4.2.4.1.2.7 - 4.2.4.1.2.8 NTC18

X	Comb.	Sfruttamento	Classe	Mx,Ed	Mx,Rd	Rid. Mx,Rd da VEd	ρx	ρy	Verifica
100	SLV 16	0.002	1	-2528	1490312.5	1	0	0	Si

Verifica a flessione semplice X SLD §§ 4.2.4.1.2.3 - 4.2.4.1.2.6 - 4.2.4.1.2.7 - 4.2.4.1.2.8 NTC18

X	Comb.	Sfruttamento	Classe	Mx,Ed	Mx,Rd	Rid. Mx,Rd da VEd	ρx	ρy	Verifica
100	SLD 8	0.002	1	-2528	1490312.5	1	0	0	Si

Verifica a presso/tenso flessione retta X §§ 4.2.4.1.2.3 - 4.2.4.1.2.6 - 4.2.4.1.2.7 - 4.2.4.1.2.8 NTC18

Verifiche eseguite utilizzando la formula conservativa (6.2) §6.2.1 EN 1993-1-1:2005.

X	Comb.	Sfruttamento	Classe	NEd	NRd	Rid. NRd da VEd	Mx,Ed	Mx,Rd	Rid. Mx,Rd da VEd	Rid. Mx,Rd da NEd	ρx	ρy	Verifica
100	SLU 118	0.03	1	111.4	168683.8	1	-43224	1490313	1		0	0	Si

Verifica a presso/tenso flessione retta X SLD §§ 4.2.4.1.2.3 - 4.2.4.1.2.6 - 4.2.4.1.2.7 - 4.2.4.1.2.8 NTC18

Verifiche eseguite utilizzando la formula conservativa (6.2) §6.2.1 EN 1993-1-1:2005.

X	Comb.	Sfruttamento	Classe	NEd	NRd	Rid. NRd da VEd	Mx,Ed	Mx,Rd	Rid. Mx,Rd da VEd	Rid. Mx,Rd da NEd	ρx	ρy	Verifica
100	SLD 6	0.002	1	105.2	168683.8	1	-2528	1490313	1		0	0	Si

Verifiche ad instabilità

Caratteristiche iniziali

Membratura principale per controllo snellezza; Calcolo di snellezze ed N critici condotti secondo gli assi principali;
Curva X: b; Curva Y: c; Svergolamento: Carico all'estradosso; Curva svergolamento: b;

Dati per instabilità attorno a x

Numero rit.	Presente	Ascissa	Campata	βx/m	Vincolo a entrambi estremi	λx/m	λVer
1	Si	0					
			1-2	1	Si	21.8	Si, (<200)
2	Si	200					

Dati per instabilità attorno a y

Numero rit.	Presente	Ascissa	Campata	βy/n	k,LT	kw,LT	Vincolo a entrambi estremi	λy/n	λVer
1	Si	0							
			1-2	1	1	1	Si	36.3	Si, (<200)
2	Si	200							

Verifica a svergolamento §4.2.4.1.3.2 NTC18

X	Comb.	Sfruttamento	Classe	Obblig.	Mx,Ed	Mb,Rd,x	χ,LT	λ adim. LT	L,LT	M,critico	Verifica
100	SLV 16	0.002	1	Si	-2528	1465861.3	0.984	0.442	200	8010168.9	Si

Verifica a svergolamento SLD §4.2.4.1.3.2 NTC18

X	Comb.	Sfruttamento	Classe	Obblig.	Mx,Ed	Mb,Rd,x	χ,LT	λ adim. LT	L,LT	M,critico	Verifica
100	SLD 8	0.002	1	Si	-2528	1465861.3	0.984	0.442	200	8010168.9	Si

Verifica a svergolamento con trazione §4.2.4.1.3.2 NTC18 - §5.5.3 ENV 1993-1-1:1994

X	Comb.	Sfruttamento	Classe	Obblig.	NEd	Mx,Ed	Mx,Eff,Ed	Mb,Rd,x	χ,LT	λ adim. LT	L,LT	M,critico	Verifica
100	SLU 72	0.029	1	Si	106.3	-43224.2	-42628.2	1465861.3	0.984	0.442	200	8010168.9	Si

Verifica a svergolamento con trazione SLD §4.2.4.1.3.2 NTC18 - §5.5.3 ENV 1993-1-1:1994

X	Comb.	Sfruttamento	Classe	Obblig.	NEd	Mx,Ed	Mx,Eff,Ed	Mb,Rd,x	χ,LT	λ adim. LT	L,LT	M,critico	Verifica
100	SLD 15	0.001	1	Si	71.1	-2528	-2129.3	1465861.3	0.984	0.442	200	8010168.9	Si

Verifica di stabilità a taglio anima Y §4.2.4.1.2.4 [4.2.27] NTC18

η	hw	tw	hw/tw max	Verifica
1.2	18.8	0.7	55.46	Si

Verifica di stabilità a taglio anima Y SLD §4.2.4.1.2.4 [4.2.27] NTC18

η	hw	tw	hw/tw max	Verifica
1.2	18.8	0.7	55.46	Si

Verifiche a deformabilità

Mensola X: No; Mensola Y: No.

Frecce lungo X

Ascissa freccia	Combinazione	Freccia	Luce	L/f	L/f,min	Tipo	Verifica
6.7	SLE RA 1	0	200	10000	250	Totale	Si
153.3	SLE RA 31	0	200	10000	250	Totale	Si
6.7	SLE RA 30	0	200	10000	250	Totale	Si
153.3	SLE RA 29	0	200	10000	250	Totale	Si
6.7	SLE RA 28	0	200	10000	250	Totale	Si
153.3	SLE RA 2	0	200	10000	350	Variabile	Si
153.3	SLE RA 31	0	200	10000	350	Variabile	Si
6.7	SLE RA 30	0	200	10000	350	Variabile	Si
153.3	SLE RA 29	0	200	10000	350	Variabile	Si
26.7	SLE RA 28	0	200	10000	350	Variabile	Si

Frecce lungo Y

Ascissa freccia	Combinazione	Freccia	Luce	L/f	L/f,min	Tipo	Verifica
100	SLE RA 1	-0.001	200	10000	250	Totale	Si
100	SLE RA 31	-0.01	200	10000	250	Totale	Si
100	SLE RA 30	-0.002	200	10000	250	Totale	Si
100	SLE RA 29	-0.01	200	10000	250	Totale	Si
100	SLE RA 28	-0.001	200	10000	250	Totale	Si
100	SLE RA 2	-0.011	200	10000	350	Variabile	Si
100	SLE RA 31	-0.009	200	10000	350	Variabile	Si
100	SLE RA 30	-0.001	200	10000	350	Variabile	Si
100	SLE RA 29	-0.008	200	10000	350	Variabile	Si
26.7	SLE RA 28	0	200	10000	350	Variabile	Si

Superelemento in acciaio composto dall'asta 190

Caratteristiche del materiale

Acciaio: S275, fyk = 2750

Caratteristiche geometriche

Lunghezza: 200
Nodo iniziale: 53 Nodo finale: 49
Cerniera iniziale: Svincolo: M2, M3 Cerniera finale: Svincolo: M2, M3
Sovraresistenza: 0% Sisma Z: No

Caratteristiche della sezione

Sezione	Rotazione	Area	Jx	Jy	ix	iy	Wx	Wy	Wplx	Wply
HEA220	0	64.41	5414.71	1954.65	9.17	5.51	515.69	177.7	569.03	270.66

Verifiche di resistenza

Verifiche a forza assiale §4.2.4.1.2.1 - §4.2.4.1.2.2 NTC18

X	Comb.	Sfruttamento	Classe	NEd	Nc,Rd	Nt,Rd	Riduzione da taglio	ρx	ρy	Verifica
0	SLV 10	0.001		147.7		168683.8	1	0	0	Si

Verifiche a forza assiale SLD §4.2.4.1.2.1 - §4.2.4.1.2.2 NTC18

X	Comb.	Sfruttamento	Classe	NEd	Nc,Rd	Nt,Rd	Riduzione da taglio	ρx	ρy	Verifica
6.7	SLD 10	0.001		105.2		168683.8	1	0	0	Si

Verifica a taglio Y §4.2.4.1.2.4 NTC18

X	Comb.	Sfruttamento	VEd	Vc,Rd	Av	Interazione taglio-torsione	Riduzione torsione	Verifica
200	SLU 72	0.025	-798.2	31347.2	20.74	Considerata	1	Si

Verifica a taglio Y SLD §4.2.4.1.2.4 NTC18

X	Comb.	Sfruttamento	VEd	Vc,Rd	Av	Interazione taglio-torsione	Riduzione torsione	Verifica
0	SLD 1	0.002	50.6	31355.9	20.74	Considerata	1	Si

Verifica a torsione §4.2.4.1.2.5 NTC18

X	Comb.	Sfruttamento torsione	TEd	TRd	Riduzione taglio resistente	Sfruttamento taglio-torsione	τEd,totale	τRd	Verifica
133.3	SLU 101	0.001	-20.6	29789.6	Considerata				Si

Verifica a flessione semplice X §§ 4.2.4.1.2.3 - 4.2.4.1.2.6 - 4.2.4.1.2.7 - 4.2.4.1.2.8 NTC18

X	Comb.	Sfruttamento	Classe	Mx,Ed	Mx,Rd	Rid. Mx,Rd da VEd	ρx	ρy	Verifica
100	SLV 4	0.002	1	-2528	1490312.5	1	0	0	Si

Verifica a flessione semplice X SLD §§ 4.2.4.1.2.3 - 4.2.4.1.2.6 - 4.2.4.1.2.7 - 4.2.4.1.2.8 NTC18

X	Comb.	Sfruttamento	Classe	Mx,Ed	Mx,Rd	Rid. Mx,Rd da VEd	ρx	ρy	Verifica
100	SLD 12	0.002	1	-2528	1490312.5	1	0	0	Si

Verifica a presso/tenso flessione retta X §§ 4.2.4.1.2.3 - 4.2.4.1.2.6 - 4.2.4.1.2.7 - 4.2.4.1.2.8 NTC18

Verifiche eseguite utilizzando la formula conservativa (6.2) §6.2.1 EN 1993-1-1:2005.

X	Comb.	Sfruttamento	Classe	NEd	NRd	Rid. NRd da VEd	Mx,Ed	Mx,Rd	Rid. Mx,Rd da VEd	Rid. Mx,Rd da NEd	ρx	ρy	Verifica
100	SLU 85	0.03	1	111.5	168683.8	1	-43224	1490313	1		0	0	Si

Verifica a presso/tenso flessione retta X SLD §§ 4.2.4.1.2.3 - 4.2.4.1.2.6 - 4.2.4.1.2.7 - 4.2.4.1.2.8 NTC18

Verifiche eseguite utilizzando la formula conservativa (6.2) §6.2.1 EN 1993-1-1:2005.

X	Comb.	Sfruttamento	Classe	NEd	NRd	Rid. NRd da VEd	Mx,Ed	Mx,Rd	Rid. Mx,Rd da VEd	Rid. Mx,Rd da NEd	ρx	ρy	Verifica
100	SLD 9	0.002	1	105.2	168683.8	1	-2528	1490313	1		0	0	Si

Verifiche ad instabilità

Caratteristiche iniziali

Membratura principale per controllo snellezza; Calcolo di snellezze ed N critici condotti secondo gli assi principali;
Curva X: b; Curva Y: c; Svergolamento: Carico all'estradosso; Curva svergolamento: b;

Dati per instabilità attorno a x

Numero rit.	Presente	Ascissa	Campata	βx/m	Vincolo a entrambi estremi	λx/m	λVer
1	Si	0					
			1-2	1	Si	21.8	Si, (<200)
2	Si	200					

Dati per instabilità attorno a y

Numero rit.	Presente	Ascissa	Campata	βy/n	k,LT	kw,LT	Vincolo a entrambi estremi	λy/n	λVer
1	Si	0							
			1-2	1	1	1	Si	36.3	Si, (<200)
2	Si	200							

Verifica a svergolamento §4.2.4.1.3.2 NTC18

X	Comb.	Sfruttamento	Classe	Obblig.	Mx,Ed	Mb,Rd,x	χ,LT	λ adim. LT	L,LT	M,critico	Verifica
100	SLV 4	0.002	1	Si	-2528	1465861.3	0.984	0.442	200	8010168.9	Si

Verifica a svergolamento SLD §4.2.4.1.3.2 NTC18

X	Comb.	Sfruttamento	Classe	Obblig.	Mx,Ed	Mb,Rd,x	χ,LT	λ adim. LT	L,LT	M,critico	Verifica
100	SLD 12	0.002	1	Si	-2528	1465861.3	0.984	0.442	200	8010168.9	Si

Verifica a svergolamento con trazione §4.2.4.1.3.2 NTC18 - §5.5.3 ENV 1993-1-1:1994

X	Comb.	Sfruttamento	Classe	Obblig.	NEd	Mx,Ed	Mx,Eff,Ed	Mb,Rd,x	χ,LT	λ adim. LT	L,LT	M,critico	Verifica
100	SLU 72	0.029	1	Si	106.4	-43224.2	-42628.1	1465861.3	0.984	0.442	200	8010168.9	Si

Verifica a svergolamento con trazione SLD §4.2.4.1.3.2 NTC18 - §5.5.3 ENV 1993-1-1:1994

X	Comb.	Sfruttamento	Classe	Obblig.	NEd	Mx,Ed	Mx,Eff,Ed	Mb,Rd,x	χ,LT	λ adim. LT	L,LT	M,critico	Verifica
100	SLD 4	0.001	1	Si	71.1	-2528	-2129.3	1465861.3	0.984	0.442	200	8010168.9	Si

Verifica di stabilità a taglio anima Y §4.2.4.1.2.4 [4.2.27] NTC18

η	hw	tw	hw/tw max	Verifica
1.2	18.8	0.7	55.46	Si

Verifica di stabilità a taglio anima Y SLD §4.2.4.1.2.4 [4.2.27] NTC18

η	hw	tw	hw/tw max	Verifica
1.2	18.8	0.7	55.46	Si

Verifiche a deformabilità

Mensola X: No; Mensola Y: No.

Frecce lungo X

Ascissa freccia	Combinazione	Freccia	Luce	L/f	L/f,min	Tipo	Verifica
6.7	SLE RA 1	0	200	10000	250	Totale	Si
153.3	SLE RA 31	0	200	10000	250	Totale	Si
6.7	SLE RA 30	0	200	10000	250	Totale	Si
153.3	SLE RA 29	0	200	10000	250	Totale	Si
6.7	SLE RA 28	0	200	10000	250	Totale	Si
153.3	SLE RA 2	0	200	10000	350	Variabile	Si
153.3	SLE RA 31	0	200	10000	350	Variabile	Si
113.3	SLE RA 30	0	200	10000	350	Variabile	Si
153.3	SLE RA 29	0	200	10000	350	Variabile	Si
33.3	SLE RA 28	0	200	10000	350	Variabile	Si

Frecce lungo Y

Ascissa freccia	Combinazione	Freccia	Luce	L/f	L/f,min	Tipo	Verifica
100	SLE RA 1	-0.001	200	10000	250	Totale	Si
100	SLE RA 31	-0.01	200	10000	250	Totale	Si
100	SLE RA 30	-0.002	200	10000	250	Totale	Si

Ascissa freccia	Combinazione	Freccia	Luce	L/f	L/f,min	Tipo	Verifica
100	SLE RA 29	-0.01	200	10000	250	Totale	Si
100	SLE RA 28	-0.001	200	10000	250	Totale	Si
100	SLE RA 2	-0.011	200	10000	350	Variabile	Si
100	SLE RA 31	-0.009	200	10000	350	Variabile	Si
100	SLE RA 30	-0.001	200	10000	350	Variabile	Si
100	SLE RA 29	-0.008	200	10000	350	Variabile	Si
13.3	SLE RA 28	0	200	10000	350	Variabile	Si

Superelemento in acciaio composto dall'asta 191

Caratteristiche del materiale

Acciaio: S275, fyk = 2750

Caratteristiche geometriche

Lunghezza: 200
Nodo iniziale: 106 Nodo finale: 104
Cerniera iniziale: Svincolo: M2, M3 Cerniera finale: Svincolo: M2, M3
Sovraresistenza: 0% Sisma Z: No

Caratteristiche della sezione

Sezione	Rotazione	Area	Jx	Jy	ix	iy	Wx	Wy	Wplx	Wply
HEA220	0	64.41	5414.71	1954.65	9.17	5.51	515.69	177.7	569.03	270.66

Verifiche di resistenza

Verifiche a forza assiale §4.2.4.1.2.1 - §4.2.4.1.2.2 NTC18

X	Comb.	Sfruttamento	Classe	NEd	Nc,Rd	Nt,Rd	Riduzione da taglio	ρx	ρy	Verifica
200	SLV 8	0.001	1	-105	168683.8		1	0	0	Si

Verifica a taglio Y §4.2.4.1.2.4 NTC18

X	Comb.	Sfruttamento	VEd	Vc,Rd	Av	Interazione taglio-torsione	Riduzione torsione	Verifica
200	SLU 72	0.574	-17970.4	31303.6	20.74	Considerata	1	Si

Verifica a taglio Y SLD §4.2.4.1.2.4 NTC18

X	Comb.	Sfruttamento	VEd	Vc,Rd	Av	Interazione taglio-torsione	Riduzione torsione	Verifica
0	SLD 1	0.002	50.6	31355.9	20.74	Considerata	1	Si

Verifica a torsione §4.2.4.1.2.5 NTC18

X	Comb.	Sfruttamento torsione	TEd	TRd	Riduzione taglio resistente	Sfruttamento taglio-torsione	τEd,totale	τRd	Verifica
200	SLU 105	0.004	124.1	29789.6	Considerata				Si

Verifica a flessione semplice X §§ 4.2.4.1.2.3 - 4.2.4.1.2.6 - 4.2.4.1.2.7 - 4.2.4.1.2.8 NTC18

X	Comb.	Sfruttamento	Classe	Mx,Ed	Mx,Rd	Rid. Mx,Rd da VEd	ρx	ρy	Verifica
100	SLU 118	0.603	1	-898330.3	1490312.5	1	0	0	Si

Verifica a flessione semplice X SLD §§ 4.2.4.1.2.3 - 4.2.4.1.2.6 - 4.2.4.1.2.7 - 4.2.4.1.2.8 NTC18

X	Comb.	Sfruttamento	Classe	Mx,Ed	Mx,Rd	Rid. Mx,Rd da VEd	ρx	ρy	Verifica
100	SLD 14	0.002	1	-2528	1490312.5	1	0	0	Si

Verifica a presso/tenso flessione retta X §§ 4.2.4.1.2.3 - 4.2.4.1.2.6 - 4.2.4.1.2.7 - 4.2.4.1.2.8 NTC18

Verifiche eseguite utilizzando la formula conservativa (6.2) §6.2.1 EN 1993-1-1:2005.

X	Comb.	Sfruttamento	Classe	NEd	NRd	Rid. NRd da VEd	Mx,Ed	Mx,Rd	Rid. Mx,Rd da VEd	Rid. Mx,Rd da NEd	ρx	ρy	Verifica
100	SLV 7	0.002	1	-105	168683.8	1	-2528	1490313	1		0	0	Si

Verifiche ad instabilità

Caratteristiche iniziali

Membratura principale per controllo snellezza; Calcolo di snellezze ed N critici condotti secondo gli assi principali;
Curva X: b; Curva Y: c; Svergolamento: Carico all'estradosso; Curva svergolamento: b;

Dati per instabilità attorno a x

Numero rit.	Presente	Ascissa	Campata	βx/m	Vincolo a entrambi estremi	λx/m	λVer
1	Si	0					
			1-2	1	Si	21.8	Si, (<200)
2	Si	200					

Dati per instabilità attorno a y

Numero rit.	Presente	Ascissa	Campata	βy/n	k,LT	kw,LT	Vincolo a entrambi estremi	λy/n	λVer
1	Si	0							
			1-2	1	1	1	Si	36.3	Si, (<200)
2	Si	200							

Verifica a svergolamento §4.2.4.1.3.2 NTC18

X	Comb.	Sfruttamento	Classe	Obblig.	Mx,Ed	Mb,Rd,x	χ,LT	λ adim. LT	L,LT	M,critico	Verifica
100	SLU 118	0.613	1	Si	-898330.3	1465861.3	0.984	0.442	200	8010168.9	Si

Verifica a svergolamento SLD §4.2.4.1.3.2 NTC18

X	Comb.	Sfruttamento	Classe	Obblig.	Mx,Ed	Mb,Rd,x	χ,LT	λ adim. LT	L,LT	M,critico	Verifica
100	SLD 14	0.002	1	Si	-2528	1465861.3	0.984	0.442	200	8010168.9	Si

Verifica a svergolamento con trazione §4.2.4.1.3.2 NTC18 - §5.5.3 ENV 1993-1-1:1994

X	Comb.	Sfruttamento	Classe	Obblig.	NEd	Mx,Ed	Mx,Eff,Ed	Mb,Rd,x	χ,LT	λ adim. LT	L,LT	M,critico	Verifica
100	SLV 6	0.001	1	Si	94.6	-2528	-1997.8	1465861.3	0.984	0.442	200	8010168.9	Si

Verifica di stabilità per pressoflessione §C.4.2.4.1.3.3.2 NTC18

X	Comb.	Sfruttamento	Classe	NEd	NRk	Mx,Ed max	Mx,Rk	My,Ed max	My,Rk	χ,x	χ,y	kxx	kxy	kyx	kyy	χ,LT	Verifica
0	SLV 7	0.002	1	-105	177118	2528	1564828.2	0	744316.1	0.982	0.888	0.95	0.36	1	0.6	0.984	Si

Verifica di stabilità a taglio anima Y §4.2.4.1.2.4 [4.2.27] NTC18

η	hw	tw	hw/tw max	Verifica
1.2	18.8	0.7	55.46	Si

Verifica di stabilità a taglio anima Y SLD §4.2.4.1.2.4 [4.2.27] NTC18

η	hw	tw	hw/tw max	Verifica
1.2	18.8	0.7	55.46	Si

Verifiche a deformabilità

Mensola X: No; Mensola Y: No.

Frecce lungo X

Ascissa freccia	Combinazione	Freccia	Luce	L/f	L/f,min	Tipo	Verifica
160	SLE RA 1	0	200	10000	250	Totale	Si
146.7	SLE RA 31	0	200	10000	250	Totale	Si
193.3	SLE RA 30	0	200	10000	250	Totale	Si
146.7	SLE RA 29	0	200	10000	250	Totale	Si
193.3	SLE RA 28	0	200	10000	250	Totale	Si
146.7	SLE RA 2	0	200	10000	350	Variabile	Si
146.7	SLE RA 31	0	200	10000	350	Variabile	Si
106.7	SLE RA 30	0	200	10000	350	Variabile	Si
146.7	SLE RA 29	0	200	10000	350	Variabile	Si
13.3	SLE RA 28	0	200	10000	350	Variabile	Si

Frecce lungo Y

Ascissa freccia	Combinazione	Freccia	Luce	L/f	L/f,min	Tipo	Verifica
100	SLE RA 18	-0.272	200	734.1	250	Totale	Si
100	SLE RA 19	-0.272	200	734.1	250	Totale	Si
100	SLE RA 6	-0.272	200	734.1	250	Totale	Si
100	SLE RA 7	-0.272	200	734.1	250	Totale	Si
100	SLE RA 14	-0.27	200	741.9	250	Totale	Si
100	SLE RA 18	-0.271	200	737.2	350	Variabile	Si
100	SLE RA 19	-0.271	200	737.2	350	Variabile	Si
100	SLE RA 6	-0.271	200	737.2	350	Variabile	Si
100	SLE RA 7	-0.271	200	737.2	350	Variabile	Si
100	SLE RA 14	-0.268	200	745	350	Variabile	Si

Superelemento in acciaio composto dall'asta 192

Caratteristiche del materiale

Acciaio: S275, fyk = 2750

Caratteristiche geometriche

Lunghezza: 200
Nodo iniziale: 105 Nodo finale: 103
Cerniera iniziale: Svincolo: M2, M3 Cerniera finale: Svincolo: M2, M3
Sovraresistenza: 0% Sisma Z: No

Caratteristiche della sezione

Sezione	Rotazione	Area	Jx	Jy	ix	iy	Wx	Wy	Wplx	Wply
HEA220	0	64.41	5414.71	1954.65	9.17	5.51	515.69	177.7	569.03	270.66

Verifiche di resistenza

Verifiche a forza assiale §4.2.4.1.2.1 - §4.2.4.1.2.2 NTC18

X	Comb.	Sfruttamento	Classe	NEd	Nc,Rd	Nt,Rd	Riduzione da taglio	ρx	ρy	Verifica
200	SLV 12	0.001	1	-105	168683.8		1	0	0	Si

Verifica a taglio Y §4.2.4.1.2.4 NTC18

X	Comb.	Sfruttamento	VEd	Vc,Rd	Av	Interazione taglio-torsione	Riduzione torsione	Verifica
200	SLU 72	0.574	-17970.4	31303.6	20.74	Considerata	1	Si

Verifica a taglio Y SLD §4.2.4.1.2.4 NTC18

X	Comb.	Sfruttamento	VEd	Vc,Rd	Av	Interazione taglio-torsione	Riduzione torsione	Verifica
0	SLD 1	0.002	50.6	31355.9	20.74	Considerata	1	Si

Verifica a torsione §4.2.4.1.2.5 NTC18

X	Comb.	Sfruttamento torsione	TEd	TRd	Riduzione taglio resistente	Sfruttamento taglio-torsione	τEd,totale	τRd	Verifica
93.3	SLU 101	0.004	-124.1	29789.6	Considerata				Si

Verifica a flessione semplice X §§ 4.2.4.1.2.3 - 4.2.4.1.2.6 - 4.2.4.1.2.7 - 4.2.4.1.2.8 NTC18

X	Comb.	Sfruttamento	Classe	Mx,Ed	Mx,Rd	Rid. Mx,Rd da VEd	ρx	ρy	Verifica
100	SLU 118	0.603	1	-898330.3	1490312.5	1	0	0	Si

Verifica a flessione semplice X SLD §§ 4.2.4.1.2.3 - 4.2.4.1.2.6 - 4.2.4.1.2.7 - 4.2.4.1.2.8 NTC18

X	Comb.	Sfruttamento	Classe	Mx,Ed	Mx,Rd	Rid. Mx,Rd da VEd	ρx	ρy	Verifica
100	SLD 1	0.002	1	-2528	1490312.5	1	0	0	Si

Verifica a presso/tenso flessione retta X §§ 4.2.4.1.2.3 - 4.2.4.1.2.6 - 4.2.4.1.2.7 - 4.2.4.1.2.8 NTC18

Verifiche eseguite utilizzando la formula conservativa (6.2) §6.2.1 EN 1993-1-1:2005.

X	Comb.	Sfruttamento	Classe	NEd	NRd	Rid. NRd da VEd	Mx,Ed	Mx,Rd	Rid. Mx,Rd da VEd	Rid. Mx,Rd da NEd	ρx	ρy	Verifica
100	SLV 12	0.002	1	-105	168683.8	1	-2528	1490313	1		0	0	Si

Verifiche ad instabilità

Caratteristiche iniziali

Membratura principale per controllo snellezza; Calcolo di snellezze ed N critici condotti secondo gli assi principali;
Curva X: b; Curva Y: c; Svergolamento: Carico all'estradosso; Curva svergolamento: b;

Dati per instabilità attorno a x

Numero rit.	Presente	Ascissa	Campata	βx/m	Vincolo a entrambi estremi	λx/m	λVer
1	Si	0					
			1-2	1	Si	21.8	Si, (<200)
2	Si	200					

Dati per instabilità attorno a y

Numero rit.	Presente	Ascissa	Campata	βy/n	k,LT	kw,LT	Vincolo a entrambi estremi	λy/n	λVer
1	Si	0							
			1-2	1	1	1	Si	36.3	Si, (<200)
2	Si	200							

Verifica a svergolamento §4.2.4.1.3.2 NTC18

X	Comb.	Sfruttamento	Classe	Obblig.	Mx,Ed	Mb,Rd,x	χ,LT	λ adim. LT	L,LT	M,critico	Verifica
100	SLU 118	0.613	1	Si	-898330.3	1465861.3	0.984	0.442	200	8010168.9	Si

Verifica a svergolamento SLD §4.2.4.1.3.2 NTC18

X	Comb.	Sfruttamento	Classe	Obblig.	Mx,Ed	Mb,Rd,x	χ,LT	λ adim. LT	L,LT	M,critico	Verifica
100	SLD 2	0.002	1	Si	-2528	1465861.3	0.984	0.442	200	8010168.9	Si

Verifica a svergolamento con trazione §4.2.4.1.3.2 NTC18 - §5.5.3 ENV 1993-1-1:1994

X	Comb.	Sfruttamento	Classe	Obblig.	NEd	Mx,Ed	Mx,Eff,Ed	Mb,Rd,x	χ,LT	λ adim. LT	L,LT	M,critico	Verifica
100	SLV 9	0.001	1	Si	94.6	-2528	-1997.8	1465861.3	0.984	0.442	200	8010168.9	Si

Verifica di stabilità per pressoflessione §C.4.2.4.1.3.3.2 NTC18

X	Comb.	Sfruttamento	Classe	NEd	NRk	Mx,Ed max	Mx,Rk	My,Ed max	My,Rk	χ,x	χ,y	kxx	kxy	kyx	kyy	χ,LT	Verifica
200	SLV 12	0.002	1	-105	177118	2528	1564828.2	0	744316.1	0.982	0.888	0.95	0.36	1	0.6	0.984	Si

Verifica di stabilità a taglio anima Y §4.2.4.1.2.4 [4.2.27] NTC18

η	hw	tw	hw/tw max	Verifica
1.2	18.8	0.7	55.46	Si

Verifica di stabilità a taglio anima Y SLD §4.2.4.1.2.4 [4.2.27] NTC18

η	hw	tw	hw/tw max	Verifica
1.2	18.8	0.7	55.46	Si

Verifiche a deformabilità

Mensola X: No; Mensola Y: No.

Frecce lungo X

Ascissa freccia	Combinazione	Freccia	Luce	L/f	L/f,min	Tipo	Verifica
160	SLE RA 1	0	200	10000	250	Totale	Si
160	SLE RA 31	0	200	10000	250	Totale	Si
160	SLE RA 30	0	200	10000	250	Totale	Si
146.7	SLE RA 29	0	200	10000	250	Totale	Si
193.3	SLE RA 28	0	200	10000	250	Totale	Si
146.7	SLE RA 2	0	200	10000	350	Variabile	Si
146.7	SLE RA 31	0	200	10000	350	Variabile	Si
6.7	SLE RA 30	0	200	10000	350	Variabile	Si
146.7	SLE RA 29	0	200	10000	350	Variabile	Si
6.7	SLE RA 28	0	200	10000	350	Variabile	Si

Frecce lungo Y

Ascissa freccia	Combinazione	Freccia	Luce	L/f	L/f,min	Tipo	Verifica
100	SLE RA 18	-0.272	200	734.1	250	Totale	Si
100	SLE RA 19	-0.272	200	734.1	250	Totale	Si
100	SLE RA 6	-0.272	200	734.1	250	Totale	Si
100	SLE RA 7	-0.272	200	734.1	250	Totale	Si
100	SLE RA 14	-0.27	200	741.9	250	Totale	Si
100	SLE RA 18	-0.271	200	737.2	350	Variabile	Si
100	SLE RA 19	-0.271	200	737.2	350	Variabile	Si
100	SLE RA 6	-0.271	200	737.2	350	Variabile	Si
100	SLE RA 7	-0.271	200	737.2	350	Variabile	Si
100	SLE RA 14	-0.268	200	745	350	Variabile	Si

Superelemento in acciaio composto dall'asta 193

Caratteristiche del materiale

Acciaio: S275, fyk = 2750

Caratteristiche geometriche

Lunghezza: 200
Nodo iniziale: 120 Nodo finale: 119
Cerniera iniziale: Svincolo: M2, M3 Cerniera finale: Svincolo: M2, M3
Sovraresistenza: 0% Sisma Z: No

Caratteristiche della sezione

Sezione	Rotazione	Area	Jx	Jy	ix	iy	Wx	Wy	Wplx	Wply
HEA240	0	76.92	7771.3	2768.96	10.05	6	675.77	230.75	745.47	351.79

Verifiche di resistenza

Verifiche a forza assiale §4.2.4.1.2.1 - §4.2.4.1.2.2 NTC18

X	Comb.	Sfruttamento	Classe	NEd	Nc,Rd	Nt,Rd	Riduzione da taglio	ρx	ρy	Verifica
200	SLV 8	0.002		496.9		201468.8	1	0	0	Si

Verifiche a forza assiale SLD §4.2.4.1.2.1 - §4.2.4.1.2.2 NTC18

X	Comb.	Sfruttamento	Classe	NEd	Nc,Rd	Nt,Rd	Riduzione da taglio	ρx	ρy	Verifica
200	SLD 8	0.001		188.9		201468.8	1	0	0	Si

Verifica a taglio Y §4.2.4.1.2.4 NTC18

X	Comb.	Sfruttamento	VEd	Vc,Rd	Av	Interazione taglio-torsione	Riduzione torsione	Verifica
200	SLU 85	0.91	-34764.9	38202.6	25.26	Considerata	1	Si

Verifica a taglio Y SLD §4.2.4.1.2.4 NTC18

X	Comb.	Sfruttamento	VEd	Vc,Rd	Av	Interazione taglio-torsione	Riduzione torsione	Verifica
0	SLD 1	0.002	60.4	38202.6	25.26	Considerata	1	Si

Verifica a flessione semplice X §§ 4.2.4.1.2.3 - 4.2.4.1.2.6 - 4.2.4.1.2.7 - 4.2.4.1.2.8 NTC18

X	Comb.	Sfruttamento	Classe	Mx,Ed	Mx,Rd	Rid. Mx,Rd da VEd	ρx	ρy	Verifica
100	SLU 118	0.89	1	-1738069.1	1952422.8	1	0	0	Si

Verifica a flessione semplice X SLD §§ 4.2.4.1.2.3 - 4.2.4.1.2.6 - 4.2.4.1.2.7 - 4.2.4.1.2.8 NTC18

X	Comb.	Sfruttamento	Classe	Mx,Ed	Mx,Rd	Rid. Mx,Rd da VEd	ρx	ρy	Verifica
100	SLD 15	0.002	1	-3019.3	1952422.8	1	0	0	Si

Verifica a presso/tenso flessione retta X §§ 4.2.4.1.2.3 - 4.2.4.1.2.6 - 4.2.4.1.2.7 - 4.2.4.1.2.8 NTC18

Verifiche eseguite utilizzando la formula conservativa (6.2) §6.2.1 EN 1993-1-1:2005.

X	Comb.	Sfruttamento	Classe	NEd	NRd	Rid. NRd da VEd	Mx,Ed	Mx,Rd	Rid. Mx,Rd da VEd	Rid. Mx,Rd da NEd	ρx	ρy	Verifica
100	SLV 8	0.004	1	496.9	201468.8	1	-3019	1952423	1		0	0	Si

Verifica a presso/tenso flessione retta X SLD §§ 4.2.4.1.2.3 - 4.2.4.1.2.6 - 4.2.4.1.2.7 - 4.2.4.1.2.8 NTC18

Verifiche eseguite utilizzando la formula conservativa (6.2) §6.2.1 EN 1993-1-1:2005.

X	Comb.	Sfruttamento	Classe	NEd	NRd	Rid. NRd da VEd	Mx,Ed	Mx,Rd	Rid. Mx,Rd da VEd	Rid. Mx,Rd da NEd	ρx	ρy	Verifica
100	SLD 7	0.002	1	188.9	201468.8	1	-3019	1952423	1		0	0	Si

Verifiche ad instabilità

Caratteristiche iniziali

Membratura principale per controllo snellezza; Calcolo di snellezze ed N critici condotti secondo gli assi principali;
Curva X: b; Curva Y: c; Svergolamento: Carico all'estradosso; Curva svergolamento: b;

Dati per instabilità attorno a x

Numero rit.	Presente	Ascissa	Campata	βx/m	Vincolo a entrambi estremi	λx/m	λVer
1	Si	0					
			1-2	1	Si	19.9	Si, (<200)
2	Si	200					

Dati per instabilità attorno a y

Numero rit.	Presente	Ascissa	Campata	βy/n	k,LT	kw,LT	Vincolo a entrambi estremi	λy/n	λVer
1	Si	0							
			1-2	1	1	1	Si	33.3	Si, (<200)
2	Si	200							

Verifica a svergolamento §4.2.4.1.3.2 NTC18

X	Comb.	Sfruttamento	Classe	Obblig.	Mx,Ed	Mb,Rd,x	χ,LT	λ adim. LT	L,LT	M,critico	Verifica
100	SLU 118	0.894	1	Si	-1738069.1	1945000.5	0.996	0.41	200	12206372.3	Si

Verifica a svergolamento SLD §4.2.4.1.3.2 NTC18

X	Comb.	Sfruttamento	Classe	Obblig.	Mx,Ed	Mb,Rd,x	χ,LT	λ adim. LT	L,LT	M,critico	Verifica
100	SLD 15	0.002	1	Si	-3019.3	1945000.5	0.996	0.41	200	12206372.3	Si

Verifica a svergolamento con trazione §4.2.4.1.3.2 NTC18 - §5.5.3 ENV 1993-1-1:1994

X	Comb.	Sfruttamento	Classe	Obblig.	NEd	Mx,Ed	Mx,Eff,Ed	Mb,Rd,x	χ,LT	λ adim. LT	L,LT	M,critico	Verifica
100	SLV 16	0.001	1	Si	149.6	-3019.3	-2099.4	1945000.5	0.996	0.41	200	12206372.3	Si

Verifica a svergolamento con trazione SLD §4.2.4.1.3.2 NTC18 - §5.5.3 ENV 1993-1-1:1994

X	Comb.	Sfruttamento	Classe	Obblig.	NEd	Mx,Ed	Mx,Eff,Ed	Mb,Rd,x	χ,LT	λ adim. LT	L,LT	M,critico	Verifica
100	SLD 12	0.001	1	Si	188.9	-3019.3	-1857.9	1945000.5	0.996	0.41	200	12206372.3	Si

Verifica di stabilità per pressoflessione §C.4.2.4.1.3.3.2 NTC18

X	Comb.	Sfruttamento	Classe	NEd	NRk	Mx,Ed max	Mx,Rk	My,Ed max	My,Rk	χ,x	χ,y	kxx	kxy	kyx	kyy	χ,LT	Verifica
186.7	SLV 10	0.004	1	-495.4	211542.2	3019.3	2050044	0	967432.2	0.99	0.906	0.95	0.36	0.984	0.6	0.996	Si

Verifica di stabilità per pressoflessione SLD §C.4.2.4.1.3.3.2 NTC18

X	Comb.	Sfruttamento	Classe	NEd	NRk	Mx,Ed max	Mx,Rk	My,Ed max	My,Rk	χ,x	χ,y	kxx	kxy	kyx	kyy	χ,LT	Verifica
200	SLD 10	0.003	1	-187.4	211542.2	3019.3	2050044	0	967432.2	0.99	0.906	0.95	0.36	0.984	0.6	0.996	Si

Verifica di stabilità a taglio anima Y §4.2.4.1.2.4 [4.2.27] NTC18

η	hw	tw	hw/tw max	Verifica
1.2	20.6	0.8	55.46	Si

Verifica di stabilità a taglio anima Y SLD §4.2.4.1.2.4 [4.2.27] NTC18

η	hw	tw	hw/tw max	Verifica
1.2	20.6	0.8	55.46	Si

Verifiche a deformabilità

Mensola X: No; Mensola Y: No.

Frecce lungo X

Ascissa freccia	Combinazione	Freccia	Luce	L/f	L/f,min	Tipo	Verifica
100	SLE RA 1	0	200	10000	250	Totale	Si
13.3	SLE RA 31	0	200	10000	250	Totale	Si
13.3	SLE RA 30	0	200	10000	250	Totale	Si
13.3	SLE RA 29	0	200	10000	250	Totale	Si
13.3	SLE RA 28	0	200	10000	250	Totale	Si
100	SLE RA 2	0	200	10000	350	Variabile	Si
13.3	SLE RA 31	0	200	10000	350	Variabile	Si
13.3	SLE RA 30	0	200	10000	350	Variabile	Si
13.3	SLE RA 29	0	200	10000	350	Variabile	Si
13.3	SLE RA 28	0	200	10000	350	Variabile	Si

Frecce lungo Y

Ascissa freccia	Combinazione	Freccia	Luce	L/f	L/f,min	Tipo	Verifica
100	SLE RA 7	-0.383	200	521.9	250	Totale	Si
100	SLE RA 19	-0.383	200	521.9	250	Totale	Si
100	SLE RA 6	-0.383	200	521.9	250	Totale	Si
100	SLE RA 18	-0.383	200	521.9	250	Totale	Si
100	SLE RA 3	-0.38	200	526.6	250	Totale	Si
100	SLE RA 7	-0.382	200	523.3	350	Variabile	Si
100	SLE RA 19	-0.382	200	523.3	350	Variabile	Si
100	SLE RA 6	-0.382	200	523.3	350	Variabile	Si
100	SLE RA 18	-0.382	200	523.3	350	Variabile	Si
100	SLE RA 3	-0.379	200	528	350	Variabile	Si

Superelemento in acciaio composto dall'asta 194

Caratteristiche del materiale

Acciaio: S275, fyk = 2750

Caratteristiche geometriche

Lunghezza: 200
Nodo iniziale: 82 Nodo finale: 80
Cerniera iniziale: Svincolo: M2, M3 Cerniera finale: Svincolo: M2, M3
Sovraresistenza: 0% Sisma Z: No

Caratteristiche della sezione

Sezione	Rotazione	Area	Jx	Jy	ix	iy	Wx	Wy	Wplx	Wply
HEA220	0	64.41	5414.71	1954.65	9.17	5.51	515.69	177.7	569.03	270.66

Verifiche di resistenza

Verifica a taglio Y §4.2.4.1.2.4 NTC18

X	Comb.	Sfruttamento	VEd	Vc,Rd	Av	Interazione taglio-torsione	Riduzione torsione	Verifica
0	SLU 106	0.037	1168.5	31335.3	20.74	Considerata	1	Si

Verifica a taglio Y SLD §4.2.4.1.2.4 NTC18

X	Comb.	Sfruttamento	VEd	Vc,Rd	Av	Interazione taglio-torsione	Riduzione torsione	Verifica
200	SLD 2	0.002	-50.6	31355.9	20.74	Considerata	1	Si

Verifica a torsione §4.2.4.1.2.5 NTC18

X	Comb.	Sfruttamento torsione	TEd	TRd	Riduzione taglio resistente	Sfruttamento taglio-torsione	τEd,totale	τRd	Verifica
193.3	SLU 40	0.002	-48.9	29789.6	Considerata				Si

Verifica a flessione semplice X §§ 4.2.4.1.2.3 - 4.2.4.1.2.6 - 4.2.4.1.2.7 - 4.2.4.1.2.8 NTC18

X	Comb.	Sfruttamento	Classe	Mx,Ed	Mx,Rd	Rid. Mx,Rd da VEd	ρx	ρy	Verifica
100	SLU 105	0.039	1	-58425	1490312.5	1	0	0	Si

Verifica a flessione semplice X SLD §§ 4.2.4.1.2.3 - 4.2.4.1.2.6 - 4.2.4.1.2.7 - 4.2.4.1.2.8 NTC18

X	Comb.	Sfruttamento	Classe	Mx,Ed	Mx,Rd	Rid. Mx,Rd da VEd	ρx	ρy	Verifica
100	SLD 15	0.002	1	-2528	1490312.5	1	0	0	Si

Verifiche ad instabilità

Caratteristiche iniziali

Membratura principale per controllo snellezza; Calcolo di snellezze ed N critici condotti secondo gli assi principali;
Curva X: b; Curva Y: c; Svergolamento: Carico all'estradosso; Curva svergolamento: b;

Dati per instabilità attorno a x

Numero rit.	Presente	Ascissa	Campata	βx/m	Vincolo a entrambi estremi	λx/m	λVer
1	Si	0					
			1-2	1	Si	21.8	Si, (<200)
2	Si	200					

Dati per instabilità attorno a y

Numero rit.	Presente	Ascissa	Campata	βy/n	k,LT	kw,LT	Vincolo a entrambi estremi	λy/n	λVer
1	Si	0							
			1-2	1	1	1	Si	36.3	Si, (<200)
2	Si	200							

Verifica a svergolamento §4.2.4.1.3.2 NTC18

X	Comb.	Sfruttamento	Classe	Obblig.	Mx,Ed	Mb,Rd,x	χ,LT	λ adim. LT	L,LT	M,critico	Verifica
100	SLU 105	0.04	1	Si	-58425	1465861.3	0.984	0.442	200	8010168.9	Si

Verifica a svergolamento SLD §4.2.4.1.3.2 NTC18

X	Comb.	Sfruttamento	Classe	Obblig.	Mx,Ed	Mb,Rd,x	χ,LT	λ adim. LT	L,LT	M,critico	Verifica
100	SLD 15	0.002	1	Si	-2528	1465861.3	0.984	0.442	200	8010168.9	Si

Verifica di stabilità a taglio anima Y §4.2.4.1.2.4 [4.2.27] NTC18

η	hw	tw	hw/tw max	Verifica
1.2	18.8	0.7	55.46	Si

Verifica di stabilità a taglio anima Y SLD §4.2.4.1.2.4 [4.2.27] NTC18

η	hw	tw	hw/tw max	Verifica
1.2	18.8	0.7	55.46	Si

Verifiche a deformabilità

Mensola X: No; Mensola Y: No.

Frecce lungo X

Ascissa freccia	Combinazione	Freccia	Luce	L/f	L/f,min	Tipo	Verifica
33.3	SLE RA 1	0	200	10000	250	Totale	Si
66.7	SLE RA 31	0	200	10000	250	Totale	Si
120	SLE RA 30	0	200	10000	250	Totale	Si
66.7	SLE RA 29	0	200	10000	250	Totale	Si
120	SLE RA 28	0	200	10000	250	Totale	Si
66.7	SLE RA 2	0	200	10000	350	Variabile	Si
66.7	SLE RA 31	0	200	10000	350	Variabile	Si
193.3	SLE RA 30	0	200	10000	350	Variabile	Si
66.7	SLE RA 29	0	200	10000	350	Variabile	Si
193.3	SLE RA 28	0	200	10000	350	Variabile	Si

Frecce lungo Y

Ascissa freccia	Combinazione	Freccia	Luce	L/f	L/f,min	Tipo	Verifica
100	SLE RA 1	-0.001	200	10000	250	Totale	Si
100	SLE RA 31	-0.014	200	10000	250	Totale	Si
100	SLE RA 30	-0.002	200	10000	250	Totale	Si
100	SLE RA 29	-0.013	200	10000	250	Totale	Si
100	SLE RA 28	-0.001	200	10000	250	Totale	Si
100	SLE RA 2	-0.016	200	10000	350	Variabile	Si
100	SLE RA 31	-0.013	200	10000	350	Variabile	Si
100	SLE RA 30	-0.001	200	10000	350	Variabile	Si
100	SLE RA 29	-0.012	200	10000	350	Variabile	Si
166.7	SLE RA 28	0	200	10000	350	Variabile	Si

Superelemento in acciaio composto dall'asta 195

Caratteristiche del materiale

Acciaio: S275, fyk = 2750

Caratteristiche geometriche

Lunghezza: 200

Nodo iniziale: 81 Nodo finale: 79
Cerniera iniziale: Svincolo: M2, M3 Cerniera finale: Svincolo: M2, M3
Sovraresistenza: 0% Sisma Z: No

Caratteristiche della sezione

Sezione	Rotazione	Area	Jx	Jy	ix	iy	Wx	Wy	Wplx	Wply
HEA220	0	64.41	5414.71	1954.65	9.17	5.51	515.69	177.7	569.03	270.66

Verifiche di resistenza

Verifica a taglio Y §4.2.4.1.2.4 NTC18

X	Comb.	Sfruttamento	VEd	Vc,Rd	Av	Interazione taglio-torsione	Riduzione torsione	Verifica
0	SLU 106	0.037	1168.5	31335.1	20.74	Considerata	1	Si

Verifica a taglio Y SLD §4.2.4.1.2.4 NTC18

X	Comb.	Sfruttamento	VEd	Vc,Rd	Av	Interazione taglio-torsione	Riduzione torsione	Verifica
0	SLD 1	0.002	50.6	31355.9	20.74	Considerata	1	Si

Verifica a torsione §4.2.4.1.2.5 NTC18

X	Comb.	Sfruttamento torsione	TEd	TRd	Riduzione taglio resistente	Sfruttamento taglio-torsione	τEd,totale	τRd	Verifica
0	SLU 7	0.002	49.4	29789.6	Considerata				Si

Verifica a flessione semplice X §§ 4.2.4.1.2.3 - 4.2.4.1.2.6 - 4.2.4.1.2.7 - 4.2.4.1.2.8 NTC18

X	Comb.	Sfruttamento	Classe	Mx,Ed	Mx,Rd	Rid. Mx,Rd da VEd	ρx	ρy	Verifica
100	SLU 105	0.039	1	-58425	1490312.5	1	0	0	Si

Verifica a flessione semplice X SLD §§ 4.2.4.1.2.3 - 4.2.4.1.2.6 - 4.2.4.1.2.7 - 4.2.4.1.2.8 NTC18

X	Comb.	Sfruttamento	Classe	Mx,Ed	Mx,Rd	Rid. Mx,Rd da VEd	ρx	ρy	Verifica
100	SLD 2	0.002	1	-2528	1490312.5	1	0	0	Si

Verifiche ad instabilità

Caratteristiche iniziali

Membratura principale per controllo snellezza; Calcolo di snellezze ed N critici condotti secondo gli assi principali;
Curva X: b; Curva Y: c; Svergolamento: Carico all'estradosso; Curva svergolamento: b;

Dati per instabilità attorno a x

Numero rit.	Presente	Ascissa	Campata	βx/m	Vincolo a entrambi estremi	λx/m	λVer
1	Si	0					
			1-2	1	Si	21.8	Si, (<200)
2	Si	200					

Dati per instabilità attorno a y

Numero rit.	Presente	Ascissa	Campata	βy/n	k,LT	kw,LT	Vincolo a entrambi estremi	λy/n	λVer
1	Si	0							
			1-2	1	1	1	Si	36.3	Si, (<200)
2	Si	200							

Verifica a svergolamento §4.2.4.1.3.2 NTC18

X	Comb.	Sfruttamento	Classe	Obblig.	Mx,Ed	Mb,Rd,x	χ,LT	λ adim. LT	L,LT	M,critico	Verifica
100	SLU 105	0.04	1	Si	-58425	1465861.3	0.984	0.442	200	8010168.9	Si

Verifica a svergolamento SLD §4.2.4.1.3.2 NTC18

X	Comb.	Sfruttamento	Classe	Obblig.	Mx,Ed	Mb,Rd,x	χ,LT	λ adim. LT	L,LT	M,critico	Verifica
100	SLD 2	0.002	1	Si	-2528	1465861.3	0.984	0.442	200	8010168.9	Si

Verifica di stabilità a taglio anima Y §4.2.4.1.2.4 [4.2.27] NTC18

η	hw	tw	hw/tw max	Verifica
1.2	18.8	0.7	55.46	Si

Verifica di stabilità a taglio anima Y SLD §4.2.4.1.2.4 [4.2.27] NTC18

η	hw	tw	hw/tw max	Verifica
1.2	18.8	0.7	55.46	Si

Verifiche a deformabilità

Mensola X: No; Mensola Y: No.

Frecce lungo X

Ascissa freccia	Combinazione	Freccia	Luce	L/f	L/f,min	Tipo	Verifica
33.3	SLE RA 1	0	200	10000	250	Totale	Si
66.7	SLE RA 31	0	200	10000	250	Totale	Si
120	SLE RA 30	0	200	10000	250	Totale	Si
66.7	SLE RA 29	0	200	10000	250	Totale	Si
33.3	SLE RA 28	0	200	10000	250	Totale	Si
66.7	SLE RA 2	0	200	10000	350	Variabile	Si
66.7	SLE RA 31	0	200	10000	350	Variabile	Si
106.7	SLE RA 30	0	200	10000	350	Variabile	Si
66.7	SLE RA 29	0	200	10000	350	Variabile	Si
186.7	SLE RA 28	0	200	10000	350	Variabile	Si

Frecce lungo Y

Ascissa freccia	Combinazione	Freccia	Luce	L/f	L/f,min	Tipo	Verifica
100	SLE RA 1	-0.001	200	10000	250	Totale	Si
100	SLE RA 31	-0.014	200	10000	250	Totale	Si

Ascissa freccia	Combinazione	Freccia	Luce	L/f	L/f,min	Tipo	Verifica
100	SLE RA 30	-0.002	200	10000	250	Totale	Si
100	SLE RA 29	-0.013	200	10000	250	Totale	Si
100	SLE RA 28	-0.001	200	10000	250	Totale	Si
100	SLE RA 2	-0.016	200	10000	350	Variabile	Si
100	SLE RA 31	-0.013	200	10000	350	Variabile	Si
100	SLE RA 30	-0.001	200	10000	350	Variabile	Si
100	SLE RA 29	-0.012	200	10000	350	Variabile	Si
180	SLE RA 28	0	200	10000	350	Variabile	Si

Superelemento in acciaio composto dall'asta 196

Caratteristiche del materiale

Acciaio: S275, fyk = 2750

Caratteristiche geometriche

Lunghezza: 200
Nodo iniziale: 52 Nodo finale: 48
Cerniera iniziale: Svincolo: M2, M3 Cerniera finale: Svincolo: M2, M3
Sovraresistenza: 0% Sisma Z: No

Caratteristiche della sezione

Sezione	Rotazione	Area	Jx	Jy	ix	iy	Wx	Wy	Wplx	Wply
HEA220	0	64.41	5414.71	1954.65	9.17	5.51	515.69	177.7	569.03	270.66

Verifiche di resistenza

Verifiche a forza assiale §4.2.4.1.2.1 - §4.2.4.1.2.2 NTC18

X	Comb.	Sfruttamento	Classe	NEd	Nc,Rd	Nt,Rd	Riduzione da taglio	ρx	ρy	Verifica
200	SLU 99	0		74.5		168683.8	1	0	0	Si

Verifica a taglio Y §4.2.4.1.2.4 NTC18

X	Comb.	Sfruttamento	VEd	Vc,Rd	Av	Interazione taglio-torsione	Riduzione torsione	Verifica
200	SLU 72	0.025	-798.2	31355.9	20.74	Considerata	1	Si

Verifica a taglio Y SLD §4.2.4.1.2.4 NTC18

X	Comb.	Sfruttamento	VEd	Vc,Rd	Av	Interazione taglio-torsione	Riduzione torsione	Verifica
0	SLD 1	0.002	50.6	31355.9	20.74	Considerata	1	Si

Verifica a flessione semplice X §§ 4.2.4.1.2.3 - 4.2.4.1.2.6 - 4.2.4.1.2.7 - 4.2.4.1.2.8 NTC18

X	Comb.	Sfruttamento	Classe	Mx,Ed	Mx,Rd	Rid. Mx,Rd da VEd	ρx	ρy	Verifica
100	SLU 106	0.029	1	-43224.2	1490312.5	1	0	0	Si

Verifica a flessione semplice X SLD §§ 4.2.4.1.2.3 - 4.2.4.1.2.6 - 4.2.4.1.2.7 - 4.2.4.1.2.8 NTC18

X	Comb.	Sfruttamento	Classe	Mx,Ed	Mx,Rd	Rid. Mx,Rd da VEd	ρx	ρy	Verifica
100	SLD 15	0.002	1	-2528	1490312.5	1	0	0	Si

Verifica a presso/tenso flessione retta X §§ 4.2.4.1.2.3 - 4.2.4.1.2.6 - 4.2.4.1.2.7 - 4.2.4.1.2.8 NTC18

Verifiche eseguite utilizzando la formula conservativa (6.2) §6.2.1 EN 1993-1-1:2005.

X	Comb.	Sfruttamento	Classe	NEd	NRd	Rid. NRd da VEd	Mx,Ed	Mx,Rd	Rid. Mx,Rd da VEd	Rid. Mx,Rd da NEd	ρx	ρy	Verifica
100	SLU 85	0.029	1	68.3	168683.8	1	-43224	1490313	1		0	0	Si

Verifiche ad instabilità

Caratteristiche iniziali

Membratura principale per controllo snellezza; Calcolo di snellezze ed N critici condotti secondo gli assi principali;
Curva X: b; Curva Y: c; Svergolamento: Carico all'estradosso; Curva svergolamento: b;

Dati per instabilità attorno a x

Numero rit.	Presente	Ascissa	Campata	βx/m	Vincolo a entrambi estremi	λx/m	λVer
1	Si	0					
			1-2	1	Si	21.8	Si, (<200)
2	Si	200					

Dati per instabilità attorno a y

Numero rit.	Presente	Ascissa	Campata	βy/n	k,LT	kw,LT	Vincolo a entrambi estremi	λy/n	λVer
1	Si	0							
			1-2	1	1	1	Si	36.3	Si, (<200)
2	Si	200							

Verifica a svergolamento §4.2.4.1.3.2 NTC18

X	Comb.	Sfruttamento	Classe	Obblig.	Mx,Ed	Mb,Rd,x	χ,LT	λ adim. LT	L,LT	M,critico	Verifica
100	SLU 106	0.029	1	Si	-43224.2	1465861.3	0.984	0.442	200	8010168.9	Si

Verifica a svergolamento SLD §4.2.4.1.3.2 NTC18

X	Comb.	Sfruttamento	Classe	Obblig.	Mx,Ed	Mb,Rd,x	χ,LT	λ adim. LT	L,LT	M,critico	Verifica
100	SLD 15	0.002	1	Si	-2528	1465861.3	0.984	0.442	200	8010168.9	Si

Verifica a svergolamento con trazione §4.2.4.1.3.2 NTC18 - §5.5.3 ENV 1993-1-1:1994

X	Comb.	Sfruttamento	Classe	Obblig.	NEd	Mx,Ed	Mx,Eff,Ed	Mb,Rd,x	χ,LT	λ adim. LT	L,LT	M,critico	Verifica
100	SLU 117	0.029	1	Si	67.8	-43224.2	-42844.1	1465861.3	0.984	0.442	200	8010168.9	Si

Verifica di stabilità a taglio anima Y §4.2.4.1.2.4 [4.2.27] NTC18

η	hw	tw	hw/tw max	Verifica
1.2	18.8	0.7	55.46	Si

Verifica di stabilità a taglio anima Y SLD §4.2.4.1.2.4 [4.2.27] NTC18

η	hw	tw	hw/tw max	Verifica
1.2	18.8	0.7	55.46	Si

Verifiche a deformabilità

Mensola X: No; Mensola Y: No.

Frecce lungo X

Ascissa freccia	Combinazione	Freccia	Luce	L/f	L/f,min	Tipo	Verifica
173.3	SLE RA 1	0	200	10000	250	Totale	Si
173.3	SLE RA 31	0	200	10000	250	Totale	Si
173.3	SLE RA 30	0	200	10000	250	Totale	Si
173.3	SLE RA 29	0	200	10000	250	Totale	Si
173.3	SLE RA 28	0	200	10000	250	Totale	Si
26.7	SLE RA 2	0	200	10000	350	Variabile	Si
26.7	SLE RA 31	0	200	10000	350	Variabile	Si
146.7	SLE RA 30	0	200	10000	350	Variabile	Si
26.7	SLE RA 29	0	200	10000	350	Variabile	Si
173.3	SLE RA 28	0	200	10000	350	Variabile	Si

Frecce lungo Y

Ascissa freccia	Combinazione	Freccia	Luce	L/f	L/f,min	Tipo	Verifica
100	SLE RA 1	-0.001	200	10000	250	Totale	Si
100	SLE RA 31	-0.01	200	10000	250	Totale	Si
100	SLE RA 30	-0.002	200	10000	250	Totale	Si
100	SLE RA 29	-0.01	200	10000	250	Totale	Si
100	SLE RA 28	-0.001	200	10000	250	Totale	Si
100	SLE RA 2	-0.011	200	10000	350	Variabile	Si
100	SLE RA 31	-0.009	200	10000	350	Variabile	Si
100	SLE RA 30	-0.001	200	10000	350	Variabile	Si
100	SLE RA 29	-0.008	200	10000	350	Variabile	Si
146.7	SLE RA 28	0	200	10000	350	Variabile	Si

Superelemento in acciaio composto dall'asta 197

Caratteristiche del materiale

Acciaio: S275, fyk = 2750

Caratteristiche geometriche

Lunghezza: 200
Nodo iniziale: 49 Nodo finale: 45
Cerniera iniziale: Svincolo: M2, M3 Cerniera finale: Svincolo: M2, M3
Sovraresistenza: 0% Sisma Z: No

Caratteristiche della sezione

Sezione	Rotazione	Area	Jx	Jy	ix	iy	Wx	Wy	Wplx	Wply
HEA220	0	64.41	5414.71	1954.65	9.17	5.51	515.69	177.7	569.03	270.66

Verifiche di resistenza

Verifiche a forza assiale §4.2.4.1.2.1 - §4.2.4.1.2.2 NTC18

X	Comb.	Sfruttamento	Classe	NEd	Nc,Rd	Nt,Rd	Riduzione da taglio	ρx	ρy	Verifica
200	SLU 99	0		74.5		168683.8	1	0	0	Si

Verifica a taglio Y §4.2.4.1.2.4 NTC18

X	Comb.	Sfruttamento	VEd	Vc,Rd	Av	Interazione taglio-torsione	Riduzione torsione	Verifica
200	SLU 72	0.025	-798.2	31355.9	20.74	Considerata	1	Si

Verifica a taglio Y SLD §4.2.4.1.2.4 NTC18

X	Comb.	Sfruttamento	VEd	Vc,Rd	Av	Interazione taglio-torsione	Riduzione torsione	Verifica
0	SLD 1	0.002	50.6	31355.9	20.74	Considerata	1	Si

Verifica a flessione semplice X §§ 4.2.4.1.2.3 - 4.2.4.1.2.6 - 4.2.4.1.2.7 - 4.2.4.1.2.8 NTC18

X	Comb.	Sfruttamento	Classe	Mx,Ed	Mx,Rd	Rid. Mx,Rd da VEd	ρx	ρy	Verifica
100	SLU 106	0.029	1	-43224.2	1490312.5	1	0	0	Si

Verifica a flessione semplice X SLD §§ 4.2.4.1.2.3 - 4.2.4.1.2.6 - 4.2.4.1.2.7 - 4.2.4.1.2.8 NTC18

X	Comb.	Sfruttamento	Classe	Mx,Ed	Mx,Rd	Rid. Mx,Rd da VEd	ρx	ρy	Verifica
100	SLD 3	0.002	1	-2528	1490312.5	1	0	0	Si

Verifica a presso/tenso flessione retta X §§ 4.2.4.1.2.3 - 4.2.4.1.2.6 - 4.2.4.1.2.7 - 4.2.4.1.2.8 NTC18

Verifiche eseguite utilizzando la formula conservativa (6.2) §6.2.1 EN 1993-1-1:2005.

X	Comb.	Sfruttamento	Classe	NEd	NRd	Rid. NRd da VEd	Mx,Ed	Mx,Rd	Rid. Mx,Rd da VEd	Rid. Mx,Rd da NEd	ρx	ρy	Verifica
100	SLU 85	0.029	1	68.3	168683.8	1	-43224	1490313	1		0	0	Si

Verifiche ad instabilità

Caratteristiche iniziali

Membratura principale per controllo snellezza; Calcolo di snellezze ed N critici condotti secondo gli assi principali;
Curva X: b; Curva Y: c; Svergolamento: Carico all'estradosso; Curva svergolamento: b;

Dati per instabilità attorno a x

Numero rit.	Presente	Ascissa	Campata	βx/m	Vincolo a entrambi estremi	λx/m	λVer
1	Si	0					
			1-2	1	Si	21.8	Si, (<200)
2	Si	200					

Dati per instabilità attorno a y

Numero rit.	Presente	Ascissa	Campata	βy/n	k,LT	kw,LT	Vincolo a entrambi estremi	λy/n	λVer
1	Si	0							
			1-2	1	1	1	Si	36.3	Si, (<200)
2	Si	200							

Verifica a svergolamento §4.2.4.1.3.2 NTC18

X	Comb.	Sfruttamento	Classe	Obblig.	Mx,Ed	Mb,Rd,x	χ,LT	λ adim. LT	L,LT	M,critico	Verifica
100	SLU 106	0.029	1	Si	-43224.2	1465861.3	0.984	0.442	200	8010168.9	Si

Verifica a svergolamento SLD §4.2.4.1.3.2 NTC18

X	Comb.	Sfruttamento	Classe	Obblig.	Mx,Ed	Mb,Rd,x	χ,LT	λ adim. LT	L,LT	M,critico	Verifica
100	SLD 3	0.002	1	Si	-2528	1465861.3	0.984	0.442	200	8010168.9	Si

Verifica a svergolamento con trazione §4.2.4.1.3.2 NTC18 - §5.5.3 ENV 1993-1-1:1994

X	Comb.	Sfruttamento	Classe	Obblig.	NEd	Mx,Ed	Mx,Eff,Ed	Mb,Rd,x	χ,LT	λ adim. LT	L,LT	M,critico	Verifica
100	SLU 117	0.029	1	Si	67.9	-43224.2	-42843.9	1465861.3	0.984	0.442	200	8010168.9	Si

Verifica di stabilità a taglio anima Y §4.2.4.1.2.4 [4.2.27] NTC18

η	hw	tw	hw/tw max	Verifica
1.2	18.8	0.7	55.46	Si

Verifica di stabilità a taglio anima Y SLD §4.2.4.1.2.4 [4.2.27] NTC18

η	hw	tw	hw/tw max	Verifica
1.2	18.8	0.7	55.46	Si

Verifiche a deformabilità

Mensola X: No; Mensola Y: No.

Frecce lungo X

Ascissa freccia	Combinazione	Freccia	Luce	L/f	L/f,min	Tipo	Verifica
173.3	SLE RA 1	0	200	10000	250	Totale	Si
173.3	SLE RA 31	0	200	10000	250	Totale	Si
173.3	SLE RA 30	0	200	10000	250	Totale	Si
173.3	SLE RA 29	0	200	10000	250	Totale	Si
173.3	SLE RA 28	0	200	10000	250	Totale	Si
26.7	SLE RA 2	0	200	10000	350	Variabile	Si
26.7	SLE RA 31	0	200	10000	350	Variabile	Si
20	SLE RA 30	0	200	10000	350	Variabile	Si
26.7	SLE RA 29	0	200	10000	350	Variabile	Si
73.3	SLE RA 28	0	200	10000	350	Variabile	Si

Frecce lungo Y

Ascissa freccia	Combinazione	Freccia	Luce	L/f	L/f,min	Tipo	Verifica
100	SLE RA 1	-0.001	200	10000	250	Totale	Si
100	SLE RA 31	-0.01	200	10000	250	Totale	Si
100	SLE RA 30	-0.002	200	10000	250	Totale	Si
100	SLE RA 29	-0.01	200	10000	250	Totale	Si
100	SLE RA 28	-0.001	200	10000	250	Totale	Si
100	SLE RA 2	-0.011	200	10000	350	Variabile	Si
100	SLE RA 31	-0.009	200	10000	350	Variabile	Si
100	SLE RA 30	-0.001	200	10000	350	Variabile	Si
100	SLE RA 29	-0.008	200	10000	350	Variabile	Si
133.3	SLE RA 28	0	200	10000	350	Variabile	Si

Superelemento in acciaio composto dall'asta 198

Caratteristiche del materiale

Acciaio: S275, fyk = 2750

Caratteristiche geometriche

Lunghezza: 200
Nodo iniziale: 104 Nodo finale: 102
Cerniera iniziale: Svincolo: M2, M3 Cerniera finale: Svincolo: M2, M3
Sovraresistenza: 0% Sisma Z: No

Caratteristiche della sezione

Sezione	Rotazione	Area	Jx	Jy	ix	iy	Wx	Wy	Wplx	Wply
HEA220	0	64.41	5414.71	1954.65	9.17	5.51	515.69	177.7	569.03	270.66

Verifiche di resistenza

Verifica a taglio Y §4.2.4.1.2.4 NTC18

X	Comb.	Sfruttamento	VEd	Vc,Rd	Av	Interazione taglio-torsione	Riduzione torsione	Verifica
200	SLU 73	0.573	-17970.4	31336.1	20.74	Considerata	1	Si

Verifica a taglio Y SLD §4.2.4.1.2.4 NTC18

X	Comb.	Sfruttamento	VEd	Vc,Rd	Av	Interazione taglio-torsione	Riduzione torsione	Verifica
0	SLD 1	0.002	50.6	31355.9	20.74	Considerata	1	Si

Verifica a torsione §4.2.4.1.2.5 NTC18

X	Comb.	Sfruttamento torsione	TEd	TRd	Riduzione taglio resistente	Sfruttamento taglio-torsione	τEd,totale	τRd	Verifica
193.3	SLU 40	0.002	-47	29789.6	Considerata				Si

Verifica a flessione semplice X §§ 4.2.4.1.2.3 - 4.2.4.1.2.6 - 4.2.4.1.2.7 - 4.2.4.1.2.8 NTC18

X	Comb.	Sfruttamento	Classe	Mx,Ed	Mx,Rd	Rid. Mx,Rd da VEd	ρx	ρy	Verifica
100	SLU 106	0.603	1	-898330.3	1490312.5	1	0	0	Si

Verifica a flessione semplice X SLD §§ 4.2.4.1.2.3 - 4.2.4.1.2.6 - 4.2.4.1.2.7 - 4.2.4.1.2.8 NTC18

X	Comb.	Sfruttamento	Classe	Mx,Ed	Mx,Rd	Rid. Mx,Rd da VEd	ρx	ρy	Verifica
100	SLD 14	0.002	1	-2528	1490312.5	1	0	0	Si

Verifiche ad instabilità

Caratteristiche iniziali

Membratura principale per controllo snellezza; Calcolo di snellezze ed N critici condotti secondo gli assi principali;
Curva X: b; Curva Y: c; Svergolamento: Carico all'estradosso; Curva svergolamento: b;

Dati per instabilità attorno a x

Numero rit.	Presente	Ascissa	Campata	βx/m	Vincolo a entrambi estremi	λx/m	λVer
1	Si	0					
			1-2	1	Si	21.8	Si, (<200)
2	Si	200					

Dati per instabilità attorno a y

Numero rit.	Presente	Ascissa	Campata	βy/n	k,LT	kw,LT	Vincolo a entrambi estremi	λy/n	λVer
1	Si	0							
			1-2	1	1	1	Si	36.3	Si, (<200)
2	Si	200							

Verifica a svergolamento §4.2.4.1.3.2 NTC18

X	Comb.	Sfruttamento	Classe	Obblig.	Mx,Ed	Mb,Rd,x	χ,LT	λ adim. LT	L,LT	M,critico	Verifica
100	SLU 106	0.613	1	Si	-898330.3	1465861.3	0.984	0.442	200	8010168.9	Si

Verifica a svergolamento SLD §4.2.4.1.3.2 NTC18

X	Comb.	Sfruttamento	Classe	Obblig.	Mx,Ed	Mb,Rd,x	χ,LT	λ adim. LT	L,LT	M,critico	Verifica
100	SLD 14	0.002	1	Si	-2528	1465861.3	0.984	0.442	200	8010168.9	Si

Verifica di stabilità a taglio anima Y §4.2.4.1.2.4 [4.2.27] NTC18

η	hw	tw	hw/tw max	Verifica
1.2	18.8	0.7	55.46	Si

Verifica di stabilità a taglio anima Y SLD §4.2.4.1.2.4 [4.2.27] NTC18

η	hw	tw	hw/tw max	Verifica
1.2	18.8	0.7	55.46	Si

Verifiche a deformabilità

Mensola X: No; Mensola Y: No.

Frecce lungo X

Ascissa freccia	Combinazione	Freccia	Luce	L/f	L/f,min	Tipo	Verifica
0	SLE RA 1	0	200	10000	250	Totale	Si
193.3	SLE RA 31	0	200	10000	250	Totale	Si
160	SLE RA 30	0	200	10000	250	Totale	Si
193.3	SLE RA 29	0	200	10000	250	Totale	Si
193.3	SLE RA 28	0	200	10000	250	Totale	Si
193.3	SLE RA 2	0	200	10000	350	Variabile	Si
193.3	SLE RA 31	0	200	10000	350	Variabile	Si
160	SLE RA 30	0	200	10000	350	Variabile	Si
193.3	SLE RA 29	0	200	10000	350	Variabile	Si
193.3	SLE RA 28	0	200	10000	350	Variabile	Si

Frecce lungo Y

Ascissa freccia	Combinazione	Freccia	Luce	L/f	L/f,min	Tipo	Verifica
100	SLE RA 18	-0.272	200	734.1	250	Totale	Si
100	SLE RA 19	-0.272	200	734.1	250	Totale	Si
100	SLE RA 6	-0.272	200	734.1	250	Totale	Si
100	SLE RA 7	-0.272	200	734.1	250	Totale	Si
100	SLE RA 14	-0.27	200	741.9	250	Totale	Si
100	SLE RA 18	-0.271	200	737.2	350	Variabile	Si
100	SLE RA 19	-0.271	200	737.2	350	Variabile	Si

Ascissa freccia	Combinazione	Freccia	Luce	L/f	L/f,min	Tipo	Verifica
100	SLE RA 6	-0.271	200	737.2	350	Variabile	Si
100	SLE RA 7	-0.271	200	737.2	350	Variabile	Si
100	SLE RA 14	-0.268	200	745	350	Variabile	Si

Superelemento in acciaio composto dall'asta 199

Caratteristiche del materiale

Acciaio: S275, fyk = 2750

Caratteristiche geometriche

Lunghezza: 200
Nodo iniziale: 103 Nodo finale: 101
Cerniera iniziale: Svincolo: M2, M3 Cerniera finale: Svincolo: M2, M3
Sovraresistenza: 0% Sisma Z: No

Caratteristiche della sezione

Sezione	Rotazione	Area	Jx	Jy	ix	iy	Wx	Wy	Wplx	Wply
HEA220	0	64.41	5414.71	1954.65	9.17	5.51	515.69	177.7	569.03	270.66

Verifiche di resistenza

Verifica a taglio Y §4.2.4.1.2.4 NTC18

X	Comb.	Sfruttamento	VEd	Vc,Rd	Av	Interazione taglio-torsione	Riduzione torsione	Verifica
200	SLU 73	0.573	-17970.4	31336	20.74	Considerata	1	Si

Verifica a taglio Y SLD §4.2.4.1.2.4 NTC18

X	Comb.	Sfruttamento	VEd	Vc,Rd	Av	Interazione taglio-torsione	Riduzione torsione	Verifica
0	SLD 1	0.002	50.6	31355.9	20.74	Considerata	1	Si

Verifica a torsione §4.2.4.1.2.5 NTC18

X	Comb.	Sfruttamento torsione	TEd	TRd	Riduzione taglio resistente	Sfruttamento taglio-torsione	τEd,totale	τRd	Verifica
0	SLU 7	0.002	47.2	29789.6	Considerata				Si

Verifica a flessione semplice X §§ 4.2.4.1.2.3 - 4.2.4.1.2.6 - 4.2.4.1.2.7 - 4.2.4.1.2.8 NTC18

X	Comb.	Sfruttamento	Classe	Mx,Ed	Mx,Rd	Rid. Mx,Rd da VEd	ρx	ρy	Verifica
100	SLU 106	0.603	1	-898330.3	1490312.5	1	0	0	Si

Verifica a flessione semplice X SLD §§ 4.2.4.1.2.3 - 4.2.4.1.2.6 - 4.2.4.1.2.7 - 4.2.4.1.2.8 NTC18

X	Comb.	Sfruttamento	Classe	Mx,Ed	Mx,Rd	Rid. Mx,Rd da VEd	ρx	ρy	Verifica
100	SLD 1	0.002	1	-2528	1490312.5	1	0	0	Si

Verifiche ad instabilità

Caratteristiche iniziali

Membratura principale per controllo snellezza; Calcolo di snellezze ed N critici condotti secondo gli assi principali;
Curva X: b; Curva Y: c; Svergolamento: Carico all'estradosso; Curva svergolamento: b;

Dati per instabilità attorno a x

Numero rit.	Presente	Ascissa	Campata	βx/m	Vincolo a entrambi estremi	λx/m	λVer
1	Si	0					
			1-2	1	Si	21.8	Si, (<200)
2	Si	200					

Dati per instabilità attorno a y

Numero rit.	Presente	Ascissa	Campata	βy/n	k,LT	kw,LT	Vincolo a entrambi estremi	λy/n	λVer
1	Si	0							
			1-2	1	1	1	Si	36.3	Si, (<200)
2	Si	200							

Verifica a svergolamento §4.2.4.1.3.2 NTC18

X	Comb.	Sfruttamento	Classe	Obblig.	Mx,Ed	Mb,Rd,x	χ,LT	λ adim. LT	L,LT	M,critico	Verifica
100	SLU 106	0.613	1	Si	-898330.3	1465861.3	0.984	0.442	200	8010168.9	Si

Verifica a svergolamento SLD §4.2.4.1.3.2 NTC18

X	Comb.	Sfruttamento	Classe	Obblig.	Mx,Ed	Mb,Rd,x	χ,LT	λ adim. LT	L,LT	M,critico	Verifica
100	SLD 2	0.002	1	Si	-2528	1465861.3	0.984	0.442	200	8010168.9	Si

Verifica di stabilità a taglio anima Y §4.2.4.1.2.4 [4.2.27] NTC18

η	hw	tw	hw/tw max	Verifica
1.2	18.8	0.7	55.46	Si

Verifica di stabilità a taglio anima Y SLD §4.2.4.1.2.4 [4.2.27] NTC18

η	hw	tw	hw/tw max	Verifica
1.2	18.8	0.7	55.46	Si

Verifiche a deformabilità

Mensola X: No; Mensola Y: No.

Frecce lungo X

Ascissa freccia	Combinazione	Freccia	Luce	L/f	L/f,min	Tipo	Verifica
0	SLE RA 1	0	200	10000	250	Totale	Si
193.3	SLE RA 31	0	200	10000	250	Totale	Si
40	SLE RA 30	0	200	10000	250	Totale	Si
193.3	SLE RA 29	0	200	10000	250	Totale	Si
180	SLE RA 28	0	200	10000	250	Totale	Si
193.3	SLE RA 2	0	200	10000	350	Variabile	Si
193.3	SLE RA 31	0	200	10000	350	Variabile	Si
40	SLE RA 30	0	200	10000	350	Variabile	Si
193.3	SLE RA 29	0	200	10000	350	Variabile	Si
180	SLE RA 28	0	200	10000	350	Variabile	Si

Frecce lungo Y

Ascissa freccia	Combinazione	Freccia	Luce	L/f	L/f,min	Tipo	Verifica
100	SLE RA 18	-0.272	200	734.1	250	Totale	Si
100	SLE RA 19	-0.272	200	734.1	250	Totale	Si
100	SLE RA 6	-0.272	200	734.1	250	Totale	Si
100	SLE RA 7	-0.272	200	734.1	250	Totale	Si
100	SLE RA 14	-0.27	200	741.9	250	Totale	Si
100	SLE RA 18	-0.271	200	737.2	350	Variabile	Si
100	SLE RA 19	-0.271	200	737.2	350	Variabile	Si
100	SLE RA 6	-0.271	200	737.2	350	Variabile	Si
100	SLE RA 7	-0.271	200	737.2	350	Variabile	Si
100	SLE RA 14	-0.268	200	745	350	Variabile	Si

Superelemento in acciaio composto dall'asta 200

Caratteristiche del materiale

Acciaio: S275, fyk = 2750

Caratteristiche geometriche

Lunghezza: 200
Nodo iniziale: 119 Nodo finale: 118
Cerniera iniziale: Svincolo: M2, M3 Cerniera finale: Svincolo: M2, M3
Sovraresistenza: 0% Sisma Z: No

Caratteristiche della sezione

Sezione	Rotazione	Area	Jx	Jy	ix	iy	Wx	Wy	Wplx	Wply
HEA240	0	76.92	7771.3	2768.96	10.05	6	675.77	230.75	745.47	351.79

Verifiche di resistenza

Verifiche a forza assiale §4.2.4.1.2.1 - §4.2.4.1.2.2 NTC18

X	Comb.	Sfruttamento	Classe	NEd	Nc,Rd	Nt,Rd	Riduzione da taglio	ρx	ρy	Verifica
200	SLV 8	0.001		165.7		201468.8	1	0	0	Si

Verifica a taglio Y §4.2.4.1.2.4 NTC18

X	Comb.	Sfruttamento	VEd	Vc,Rd	Av	Interazione taglio-torsione	Riduzione torsione	Verifica
200	SLU 106	0.91	-34764.9	38202.6	25.26	Considerata	1	Si

Verifica a taglio Y SLD §4.2.4.1.2.4 NTC18

X	Comb.	Sfruttamento	VEd	Vc,Rd	Av	Interazione taglio-torsione	Riduzione torsione	Verifica
0	SLD 1	0.002	60.4	38202.6	25.26	Considerata	1	Si

Verifica a flessione semplice X §§ 4.2.4.1.2.3 - 4.2.4.1.2.6 - 4.2.4.1.2.7 - 4.2.4.1.2.8 NTC18

X	Comb.	Sfruttamento	Classe	Mx,Ed	Mx,Rd	Rid. Mx,Rd da VEd	ρx	ρy	Verifica
100	SLU 105	0.89	1	-1738069.1	1952422.8	1	0	0	Si

Verifica a flessione semplice X SLD §§ 4.2.4.1.2.3 - 4.2.4.1.2.6 - 4.2.4.1.2.7 - 4.2.4.1.2.8 NTC18

X	Comb.	Sfruttamento	Classe	Mx,Ed	Mx,Rd	Rid. Mx,Rd da VEd	ρx	ρy	Verifica
100	SLD 15	0.002	1	-3019.3	1952422.8	1	0	0	Si

Verifica a presso/tenso flessione retta X §§ 4.2.4.1.2.3 - 4.2.4.1.2.6 - 4.2.4.1.2.7 - 4.2.4.1.2.8 NTC18

Verifiche eseguite utilizzando la formula conservativa (6.2) §6.2.1 EN 1993-1-1:2005.

X	Comb.	Sfruttamento	Classe	NEd	NRd	Rid. NRd da VEd	Mx,Ed	Mx,Rd	Rid. Mx,Rd da VEd	Rid. Mx,Rd da NEd	ρx	ρy	Verifica
100	SLV 7	0.002	1	165.7	201468.8	1	-3019	1952423	1		0	0	Si

Verifiche ad instabilità

Caratteristiche iniziali

Membratura principale per controllo snellezza; Calcolo di snellezze ed N critici condotti secondo gli assi principali;
Curva X: b; Curva Y: c; Svergolamento: Carico all'estradosso; Curva svergolamento: b;

Dati per instabilità attorno a x

Numero rit.	Presente	Ascissa	Campata	βx/m	Vincolo a entrambi estremi	λx/m	λVer
1	Si	0					
			1-2	1	Si	19.9	Si, (<200)
2	Si	200					

Dati per instabilità attorno a y

Numero rit.	Presente	Ascissa	Campata	βy/n	k,LT	kw,LT	Vincolo a entrambi estremi	λy/n	λVer
1	Si	0							
			1-2	1	1	1	Si	33.3	Si, (<200)
2	Si	200							

Verifica a svergolamento §4.2.4.1.3.2 NTC18

X	Comb.	Sfruttamento	Classe	Obblig.	Mx,Ed	Mb,Rd,x	χ,LT	λ adim. LT	L,LT	M,critico	Verifica
100	SLU 73	0.894	1	Si	-1738069.1	1945000.5	0.996	0.41	200	12206372.3	Si

Verifica a svergolamento SLD §4.2.4.1.3.2 NTC18

X	Comb.	Sfruttamento	Classe	Obblig.	Mx,Ed	Mb,Rd,x	χ,LT	λ adim. LT	L,LT	M,critico	Verifica
100	SLD 15	0.002	1	Si	-3019.3	1945000.5	0.996	0.41	200	12206372.3	Si

Verifica a svergolamento con trazione §4.2.4.1.3.2 NTC18 - §5.5.3 ENV 1993-1-1:1994

X	Comb.	Sfruttamento	Classe	Obblig.	NEd	Mx,Ed	Mx,Eff,Ed	Mb,Rd,x	χ,LT	λ adim. LT	L,LT	M,critico	Verifica
100	SLV 12	0.001	1	Si	165.7	-3019.3	-2000.5	1945000.5	0.996	0.41	200	12206372.3	Si

Verifica di stabilità per pressoflessione §C.4.2.4.1.3.3.2 NTC18

X	Comb.	Sfruttamento	Classe	NEd	NRk	Mx,Ed max	Mx,Rk	My,Ed max	My,Rk	χ,x	χ,y	kxx	kxy	kyx	kyy	χ,LT	Verifica
200	SLV 10	0.002	1	-164.4	211542.2	3019.3	2050044	0	967432.2	0.99	0.906	0.95	0.36	0.984	0.6	0.996	Si

Verifica di stabilità a taglio anima Y §4.2.4.1.2.4 [4.2.27] NTC18

η	hw	tw	hw/tw max	Verifica
1.2	20.6	0.8	55.46	Si

Verifica di stabilità a taglio anima Y SLD §4.2.4.1.2.4 [4.2.27] NTC18

η	hw	tw	hw/tw max	Verifica
1.2	20.6	0.8	55.46	Si

Verifiche a deformabilità

Mensola X: No; Mensola Y: No.

Frecce lungo X

Ascissa freccia	Combinazione	Freccia	Luce	L/f	L/f,min	Tipo	Verifica
100	SLE RA 1	0	200	10000	250	Totale	Si
160	SLE RA 31	0	200	10000	250	Totale	Si
160	SLE RA 30	0	200	10000	250	Totale	Si
160	SLE RA 29	0	200	10000	250	Totale	Si
160	SLE RA 28	0	200	10000	250	Totale	Si
100	SLE RA 2	0	200	10000	350	Variabile	Si
160	SLE RA 31	0	200	10000	350	Variabile	Si
160	SLE RA 30	0	200	10000	350	Variabile	Si
160	SLE RA 29	0	200	10000	350	Variabile	Si
160	SLE RA 28	0	200	10000	350	Variabile	Si

Frecce lungo Y

Ascissa freccia	Combinazione	Freccia	Luce	L/f	L/f,min	Tipo	Verifica
100	SLE RA 6	-0.383	200	521.9	250	Totale	Si
100	SLE RA 7	-0.383	200	521.9	250	Totale	Si
100	SLE RA 18	-0.383	200	521.9	250	Totale	Si
100	SLE RA 19	-0.383	200	521.9	250	Totale	Si
100	SLE RA 2	-0.38	200	526.6	250	Totale	Si
100	SLE RA 6	-0.382	200	523.3	350	Variabile	Si
100	SLE RA 7	-0.382	200	523.3	350	Variabile	Si
100	SLE RA 18	-0.382	200	523.3	350	Variabile	Si
100	SLE RA 19	-0.382	200	523.3	350	Variabile	Si
100	SLE RA 2	-0.379	200	528	350	Variabile	Si

Superelemento in acciaio composto dall'asta 201

Caratteristiche del materiale

Acciaio: S275, fyk = 2750

Caratteristiche geometriche

Lunghezza: 200
Nodo iniziale: 80 Nodo finale: 78
Cerniera iniziale: Svincolo: M2, M3 Cerniera finale: Svincolo: M2, M3
Sovraresistenza: 0% Sisma Z: No

Caratteristiche della sezione

Sezione	Rotazione	Area	Jx	Jy	ix	iy	Wx	Wy	Wplx	Wply
HEA220	0	64.41	5414.71	1954.65	9.17	5.51	515.69	177.7	569.03	270.66

Verifiche di resistenza

Verifica a taglio Y §4.2.4.1.2.4 NTC18

X	Comb.	Sfruttamento	VEd	Vc,Rd	Av	Interazione taglio-torsione	Riduzione torsione	Verifica
200	SLU 132	0.013	-421.8	31340.5	20.74	Considerata	1	Si

Verifica a taglio Y SLD §4.2.4.1.2.4 NTC18

X	Comb.	Sfruttamento	VEd	Vc,Rd	Av	Interazione taglio-torsione	Riduzione torsione	Verifica
200	SLD 2	0.002	-50.6	31355.9	20.74	Considerata	1	Si

Verifica a torsione §4.2.4.1.2.5 NTC18

X	Comb.	Sfruttamento torsione	TEd	TRd	Riduzione taglio resistente	Sfruttamento taglio-torsione	τEd,totale	τRd	Verifica
100	SLU 106	0.002	-49.5	29789.6	Considerata				Si

Verifica a flessione semplice X §§ 4.2.4.1.2.3 - 4.2.4.1.2.6 - 4.2.4.1.2.7 - 4.2.4.1.2.8 NTC18

X	Comb.	Sfruttamento	Classe	Mx,Ed	Mx,Rd	Rid. Mx,Rd da VEd	ρx	ρy	Verifica
100	SLU 96	0.014	1	-21091.5	1490312.5	1	0	0	Si

Verifica a flessione semplice X SLD §§ 4.2.4.1.2.3 - 4.2.4.1.2.6 - 4.2.4.1.2.7 - 4.2.4.1.2.8 NTC18

X	Comb.	Sfruttamento	Classe	Mx,Ed	Mx,Rd	Rid. Mx,Rd da VEd	ρx	ρy	Verifica
100	SLD 15	0.002	1	-2528	1490312.5	1	0	0	Si

Verifiche ad instabilità

Caratteristiche iniziali

Membratura principale per controllo snellezza; Calcolo di snellezze ed N critici condotti secondo gli assi principali;
Curva X: b; Curva Y: c; Svergolamento: Carico all'estradosso; Curva svergolamento: b;

Dati per instabilità attorno a x

Numero rit.	Presente	Ascissa	Campata	βx/m	Vincolo a entrambi estremi	λx/m	λVer
1	Si	0					
			1-2	1	Si	21.8	Si, (<200)
2	Si	200					

Dati per instabilità attorno a y

Numero rit.	Presente	Ascissa	Campata	βy/n	k,LT	kw,LT	Vincolo a entrambi estremi	λy/n	λVer
1	Si	0							
			1-2	1	1	1	Si	36.3	Si, (<200)
2	Si	200							

Verifica a svergolamento §4.2.4.1.3.2 NTC18

X	Comb.	Sfruttamento	Classe	Obblig.	Mx,Ed	Mb,Rd,x	χ,LT	λ adim. LT	L,LT	M,critico	Verifica
100	SLU 96	0.014	1	Si	-21091.5	1465861.3	0.984	0.442	200	8010168.9	Si

Verifica a svergolamento SLD §4.2.4.1.3.2 NTC18

X	Comb.	Sfruttamento	Classe	Obblig.	Mx,Ed	Mb,Rd,x	χ,LT	λ adim. LT	L,LT	M,critico	Verifica
100	SLD 15	0.002	1	Si	-2528	1465861.3	0.984	0.442	200	8010168.9	Si

Verifica di stabilità a taglio anima Y §4.2.4.1.2.4 [4.2.27] NTC18

η	hw	tw	hw/tw max	Verifica
1.2	18.8	0.7	55.46	Si

Verifica di stabilità a taglio anima Y SLD §4.2.4.1.2.4 [4.2.27] NTC18

η	hw	tw	hw/tw max	Verifica
1.2	18.8	0.7	55.46	Si

Verifiche a deformabilità

Mensola X: No; Mensola Y: No.

Frecce lungo X

Ascissa freccia	Combinazione	Freccia	Luce	L/f	L/f,min	Tipo	Verifica
166.7	SLE RA 1	0	200	10000	250	Totale	Si
80	SLE RA 31	0	200	10000	250	Totale	Si
166.7	SLE RA 30	0	200	10000	250	Totale	Si
80	SLE RA 29	0	200	10000	250	Totale	Si
166.7	SLE RA 28	0	200	10000	250	Totale	Si
6.7	SLE RA 2	0	200	10000	350	Variabile	Si
193.3	SLE RA 31	0	200	10000	350	Variabile	Si
173.3	SLE RA 30	0	200	10000	350	Variabile	Si
6.7	SLE RA 29	0	200	10000	350	Variabile	Si
173.3	SLE RA 28	0	200	10000	350	Variabile	Si

Frecce lungo Y

Ascissa freccia	Combinazione	Freccia	Luce	L/f	L/f,min	Tipo	Verifica
100	SLE RA 1	-0.001	200	10000	250	Totale	Si
100	SLE RA 31	-0.007	200	10000	250	Totale	Si
100	SLE RA 30	-0.007	200	10000	250	Totale	Si
100	SLE RA 29	-0.006	200	10000	250	Totale	Si
100	SLE RA 28	-0.006	200	10000	250	Totale	Si
180	SLE RA 2	0	200	10000	350	Variabile	Si
100	SLE RA 31	-0.005	200	10000	350	Variabile	Si
100	SLE RA 30	-0.005	200	10000	350	Variabile	Si
100	SLE RA 29	-0.004	200	10000	350	Variabile	Si
100	SLE RA 28	-0.004	200	10000	350	Variabile	Si

Superelemento in acciaio composto dall'asta 202

Caratteristiche del materiale

Acciaio: S275, fyk = 2750

Caratteristiche geometriche

Lunghezza: 200
Nodo iniziale: 79 Nodo finale: 77
Cerniera iniziale: Svincolo: M2, M3 Cerniera finale: Svincolo: M2, M3
Sovraresistenza: 0% Sisma Z: No

Caratteristiche della sezione

Sezione	Rotazione	Area	Jx	Jy	ix	iy	Wx	Wy	Wplx	Wply
HEA220	0	64.41	5414.71	1954.65	9.17	5.51	515.69	177.7	569.03	270.66

Verifiche di resistenza

Verifica a taglio Y §4.2.4.1.2.4 NTC18

X	Comb.	Sfruttamento	VEd	Vc,Rd	Av	Interazione taglio-torsione	Riduzione torsione	Verifica
200	SLU 132	0.013	-421.8	31340.5	20.74	Considerata	1	Si

Verifica a taglio Y SLD §4.2.4.1.2.4 NTC18

X	Comb.	Sfruttamento	VEd	Vc,Rd	Av	Interazione taglio-torsione	Riduzione torsione	Verifica
0	SLD 1	0.002	50.6	31355.9	20.74	Considerata	1	Si

Verifica a torsione §4.2.4.1.2.5 NTC18

X	Comb.	Sfruttamento torsione	TEd	TRd	Riduzione taglio resistente	Sfruttamento taglio-torsione	τEd,totale	τRd	Verifica
100	SLU 106	0.002	49.5	29789.6	Considerata				Si

Verifica a flessione semplice X §§ 4.2.4.1.2.3 - 4.2.4.1.2.6 - 4.2.4.1.2.7 - 4.2.4.1.2.8 NTC18

X	Comb.	Sfruttamento	Classe	Mx,Ed	Mx,Rd	Rid. Mx,Rd da VEd	ρx	ρy	Verifica
100	SLU 96	0.014	1	-21091.5	1490312.5	1	0	0	Si

Verifica a flessione semplice X SLD §§ 4.2.4.1.2.3 - 4.2.4.1.2.6 - 4.2.4.1.2.7 - 4.2.4.1.2.8 NTC18

X	Comb.	Sfruttamento	Classe	Mx,Ed	Mx,Rd	Rid. Mx,Rd da VEd	ρx	ρy	Verifica
100	SLD 2	0.002	1	-2528	1490312.5	1	0	0	Si

Verifiche ad instabilità

Caratteristiche iniziali

Membratura principale per controllo snellezza; Calcolo di snellezze ed N critici condotti secondo gli assi principali;
Curva X: b; Curva Y: c; Svergolamento: Carico all'estradosso; Curva svergolamento: b;

Dati per instabilità attorno a x

Numero rit.	Presente	Ascissa	Campata	βx/m	Vincolo a entrambi estremi	λx/m	λVer
1	Si	0					
			1-2	1	Si	21.8	Si, (<200)
2	Si	200					

Dati per instabilità attorno a y

Numero rit.	Presente	Ascissa	Campata	βy/n	k,LT	kw,LT	Vincolo a entrambi estremi	λy/n	λVer
1	Si	0							
			1-2	1	1	1	Si	36.3	Si, (<200)
2	Si	200							

Verifica a svergolamento §4.2.4.1.3.2 NTC18

X	Comb.	Sfruttamento	Classe	Obblig.	Mx,Ed	Mb,Rd,x	χ,LT	λ adim. LT	L,LT	M,critico	Verifica
100	SLU 96	0.014	1	Si	-21091.5	1465861.3	0.984	0.442	200	8010168.9	Si

Verifica a svergolamento SLD §4.2.4.1.3.2 NTC18

X	Comb.	Sfruttamento	Classe	Obblig.	Mx,Ed	Mb,Rd,x	χ,LT	λ adim. LT	L,LT	M,critico	Verifica
100	SLD 2	0.002	1	Si	-2528	1465861.3	0.984	0.442	200	8010168.9	Si

Verifica di stabilità a taglio anima Y §4.2.4.1.2.4 [4.2.27] NTC18

η	hw	tw	hw/tw max	Verifica
1.2	18.8	0.7	55.46	Si

Verifica di stabilità a taglio anima Y SLD §4.2.4.1.2.4 [4.2.27] NTC18

η	hw	tw	hw/tw max	Verifica
1.2	18.8	0.7	55.46	Si

Verifiche a deformabilità

Mensola X: No; Mensola Y: No.

Frecce lungo X

Ascissa freccia	Combinazione	Freccia	Luce	L/f	L/f,min	Tipo	Verifica
166.7	SLE RA 1	0	200	10000	250	Totale	Si
80	SLE RA 31	0	200	10000	250	Totale	Si
80	SLE RA 30	0	200	10000	250	Totale	Si
80	SLE RA 29	0	200	10000	250	Totale	Si
166.7	SLE RA 28	0	200	10000	250	Totale	Si
6.7	SLE RA 2	0	200	10000	350	Variabile	Si
193.3	SLE RA 31	0	200	10000	350	Variabile	Si
33.3	SLE RA 30	0	200	10000	350	Variabile	Si
193.3	SLE RA 29	0	200	10000	350	Variabile	Si
13.3	SLE RA 28	0	200	10000	350	Variabile	Si

Frecce lungo Y

Ascissa freccia	Combinazione	Freccia	Luce	L/f	L/f,min	Tipo	Verifica
100	SLE RA 1	-0.001	200	10000	250	Totale	Si
100	SLE RA 31	-0.007	200	10000	250	Totale	Si
100	SLE RA 30	-0.007	200	10000	250	Totale	Si
100	SLE RA 29	-0.006	200	10000	250	Totale	Si
100	SLE RA 28	-0.006	200	10000	250	Totale	Si
180	SLE RA 2	0	200	10000	350	Variabile	Si
100	SLE RA 31	-0.005	200	10000	350	Variabile	Si
100	SLE RA 30	-0.005	200	10000	350	Variabile	Si
100	SLE RA 29	-0.004	200	10000	350	Variabile	Si
100	SLE RA 28	-0.004	200	10000	350	Variabile	Si

Superelemento in acciaio composto dall'asta 203

Caratteristiche del materiale

Acciaio: S275, fyk = 2750

Caratteristiche geometriche

Lunghezza: 200
Nodo iniziale: 48 Nodo finale: 44
Cerniera iniziale: Svincolo: M2, M3 Cerniera finale: Svincolo: M2, M3
Sovraresistenza: 0% Sisma Z: No

Caratteristiche della sezione

Sezione	Rotazione	Area	Jx	Jy	ix	iy	Wx	Wy	Wplx	Wply
HEA220	0	64.41	5414.71	1954.65	9.17	5.51	515.69	177.7	569.03	270.66

Verifiche di resistenza

Verifiche a forza assiale §4.2.4.1.2.1 - §4.2.4.1.2.2 NTC18

X	Comb.	Sfruttamento	Classe	NEd	Nc,Rd	Nt,Rd	Riduzione da taglio	ρx	ρy	Verifica
180	SLU 99	0		81.5		168683.8	1	0	0	Si

Verifica a taglio Y §4.2.4.1.2.4 NTC18

X	Comb.	Sfruttamento	VEd	Vc,Rd	Av	Interazione taglio-torsione	Riduzione torsione	Verifica
200	SLU 98	0.01	-302.3	31355.9	20.74	Considerata	1	Si

Verifica a taglio Y SLD §4.2.4.1.2.4 NTC18

X	Comb.	Sfruttamento	VEd	Vc,Rd	Av	Interazione taglio-torsione	Riduzione torsione	Verifica
0	SLD 1	0.002	50.6	31355.9	20.74	Considerata	1	Si

Verifica a flessione semplice X §§ 4.2.4.1.2.3 - 4.2.4.1.2.6 - 4.2.4.1.2.7 - 4.2.4.1.2.8 NTC18

X	Comb.	Sfruttamento	Classe	Mx,Ed	Mx,Rd	Rid. Mx,Rd da VEd	ρx	ρy	Verifica
100	SLU 56	0.008	1	-11680.4	1490312.5	1	0	0	Si

Verifica a flessione semplice X SLD §§ 4.2.4.1.2.3 - 4.2.4.1.2.6 - 4.2.4.1.2.7 - 4.2.4.1.2.8 NTC18

X	Comb.	Sfruttamento	Classe	Mx,Ed	Mx,Rd	Rid. Mx,Rd da VEd	ρx	ρy	Verifica
100	SLD 15	0.002	1	-2528	1490312.5	1	0	0	Si

Verifica a presso/tenso flessione retta X §§ 4.2.4.1.2.3 - 4.2.4.1.2.6 - 4.2.4.1.2.7 - 4.2.4.1.2.8 NTC18

Verifiche eseguite utilizzando la formula conservativa (6.2) §6.2.1 EN 1993-1-1:2005.

X	Comb.	Sfruttamento	Classe	NEd	NRd	Rid. NRd da VEd	Mx,Ed	Mx,Rd	Rid. Mx,Rd da VEd	Rid. Mx,Rd da NEd	ρx	ρy	Verifica
100	SLU 132	0.011	1	81.5	168683.8	1	-16183	1490313	1		0	0	Si

Verifiche ad instabilità

Caratteristiche iniziali

Membratura principale per controllo snellezza; Calcolo di snellezze ed N critici condotti secondo gli assi principali;
Curva X: b; Curva Y: c; Svergolamento: Carico all'estradosso; Curva svergolamento: b;

Dati per instabilità attorno a x

Numero rit.	Presente	Ascissa	Campata	βx/m	Vincolo a entrambi estremi	λx/m	λVer
1	Si	0					
			1-2	1	Si	21.8	Si, (<200)
2	Si	200					

Dati per instabilità attorno a y

Numero rit.	Presente	Ascissa	Campata	βy/n	k,LT	kw,LT	Vincolo a entrambi estremi	λy/n	λVer
1	Si	0							
			1-2	1	1	1	Si	36.3	Si, (<200)
2	Si	200							

Verifica a svergolamento §4.2.4.1.3.2 NTC18

X	Comb.	Sfruttamento	Classe	Obblig.	Mx,Ed	Mb,Rd,x	χ,LT	λ adim. LT	L,LT	M,critico	Verifica
100	SLU 56	0.008	1	Si	-11680.4	1465861.3	0.984	0.442	200	8010168.9	Si

Verifica a svergolamento SLD §4.2.4.1.3.2 NTC18

X	Comb.	Sfruttamento	Classe	Obblig.	Mx,Ed	Mb,Rd,x	χ,LT	λ adim. LT	L,LT	M,critico	Verifica
100	SLD 15	0.002	1	Si	-2528	1465861.3	0.984	0.442	200	8010168.9	Si

Verifica a svergolamento con trazione §4.2.4.1.3.2 NTC18 - §5.5.3 ENV 1993-1-1:1994

X	Comb.	Sfruttamento	Classe	Obblig.	NEd	Mx,Ed	Mx,Eff,Ed	Mb,Rd,x	χ,LT	λ adim. LT	L,LT	M,critico	Verifica
100	SLU 96	0.011	1	Si	81.1	-16183	-15728.7	1465861.3	0.984	0.442	200	8010168.9	Si

Verifica di stabilità a taglio anima Y §4.2.4.1.2.4 [4.2.27] NTC18

η	hw	tw	hw/tw max	Verifica
1.2	18.8	0.7	55.46	Si

Verifica di stabilità a taglio anima Y SLD §4.2.4.1.2.4 [4.2.27] NTC18

η	hw	tw	hw/tw max	Verifica
1.2	18.8	0.7	55.46	Si

Verifiche a deformabilità

Mensola X: No; Mensola Y: No.

Frecce lungo X

Ascissa freccia	Combinazione	Freccia	Luce	L/f	L/f,min	Tipo	Verifica
26.7	SLE RA 1	0	200	10000	250	Totale	Si
193.3	SLE RA 31	0	200	10000	250	Totale	Si
26.7	SLE RA 30	0	200	10000	250	Totale	Si
193.3	SLE RA 29	0	200	10000	250	Totale	Si
26.7	SLE RA 28	0	200	10000	250	Totale	Si
6.7	SLE RA 2	0	200	10000	350	Variabile	Si
193.3	SLE RA 31	0	200	10000	350	Variabile	Si
20	SLE RA 30	0	200	10000	350	Variabile	Si
126.7	SLE RA 29	0	200	10000	350	Variabile	Si
6.7	SLE RA 28	0	200	10000	350	Variabile	Si

Frecce lungo Y

Ascissa freccia	Combinazione	Freccia	Luce	L/f	L/f,min	Tipo	Verifica
100	SLE RA 1	-0.001	200	10000	250	Totale	Si
100	SLE RA 31	-0.005	200	10000	250	Totale	Si
100	SLE RA 30	-0.005	200	10000	250	Totale	Si
100	SLE RA 29	-0.004	200	10000	250	Totale	Si
100	SLE RA 28	-0.004	200	10000	250	Totale	Si
0	SLE RA 2	0	200	10000	350	Variabile	Si
100	SLE RA 31	-0.004	200	10000	350	Variabile	Si
100	SLE RA 30	-0.004	200	10000	350	Variabile	Si
100	SLE RA 29	-0.003	200	10000	350	Variabile	Si
100	SLE RA 28	-0.003	200	10000	350	Variabile	Si

Superelemento in acciaio composto dall'asta 204

Caratteristiche del materiale

Acciaio: S275, fyk = 2750

Caratteristiche geometriche

Lunghezza: 200
Nodo iniziale: 45 Nodo finale: 41
Cerniera iniziale: Svincolo: M2, M3 Cerniera finale: Svincolo: M2, M3
Sovraresistenza: 0% Sisma Z: No

Caratteristiche della sezione

Sezione	Rotazione	Area	Jx	Jy	ix	iy	Wx	Wy	Wplx	Wply
HEA220	0	64.41	5414.71	1954.65	9.17	5.51	515.69	177.7	569.03	270.66

Verifiche di resistenza

Verifiche a forza assiale §4.2.4.1.2.1 - §4.2.4.1.2.2 NTC18

X	Comb.	Sfruttamento	Classe	NEd	Nc,Rd	Nt,Rd	Riduzione da taglio	ρx	ρy	Verifica
193.3	SLU 99	0		81.6		168683.8	1	0	0	Si

Verifica a taglio Y §4.2.4.1.2.4 NTC18

X	Comb.	Sfruttamento	VEd	Vc,Rd	Av	Interazione taglio-torsione	Riduzione torsione	Verifica
200	SLU 97	0.01	-302.3	31355.9	20.74	Considerata	1	Si

Verifica a taglio Y SLD §4.2.4.1.2.4 NTC18

X	Comb.	Sfruttamento	VEd	Vc,Rd	Av	Interazione taglio-torsione	Riduzione torsione	Verifica
0	SLD 1	0.002	50.6	31355.9	20.74	Considerata	1	Si

Verifica a flessione semplice X §§ 4.2.4.1.2.3 - 4.2.4.1.2.6 - 4.2.4.1.2.7 - 4.2.4.1.2.8 NTC18

X	Comb.	Sfruttamento	Classe	Mx,Ed	Mx,Rd	Rid. Mx,Rd da VEd	ρx	ρy	Verifica
100	SLU 56	0.008	1	-11680.4	1490312.5	1	0	0	Si

Verifica a flessione semplice X SLD §§ 4.2.4.1.2.3 - 4.2.4.1.2.6 - 4.2.4.1.2.7 - 4.2.4.1.2.8 NTC18

X	Comb.	Sfruttamento	Classe	Mx,Ed	Mx,Rd	Rid. Mx,Rd da VEd	ρx	ρy	Verifica
100	SLD 3	0.002	1	-2528	1490312.5	1	0	0	Si

Verifica a presso/tenso flessione retta X §§ 4.2.4.1.2.3 - 4.2.4.1.2.6 - 4.2.4.1.2.7 - 4.2.4.1.2.8 NTC18

Verifiche eseguite utilizzando la formula conservativa (6.2) §6.2.1 EN 1993-1-1:2005.

X	Comb.	Sfruttamento	Classe	NEd	NRd	Rid. NRd da VEd	Mx,Ed	Mx,Rd	Rid. Mx,Rd da VEd	Rid. Mx,Rd da NEd	ρx	ρy	Verifica
100	SLU 132	0.011	1	81.6	168683.8	1	-16183	1490313	1		0	0	Si

Verifiche ad instabilità

Caratteristiche iniziali

Membratura principale per controllo snellezza; Calcolo di snellezze ed N critici condotti secondo gli assi principali;
Curva X: b; Curva Y: c; Svergolamento: Carico all'estradosso; Curva svergolamento: b;

Dati per instabilità attorno a x

Numero rit.	Presente	Ascissa	Campata	βx/m	Vincolo a entrambi estremi	λx/m	λVer
1	Si	0					
			1-2	1	Si	21.8	Si, (<200)
2	Si	200					

Dati per instabilità attorno a y

Numero rit.	Presente	Ascissa	Campata	βy/n	k,LT	kw,LT	Vincolo a entrambi estremi	λy/n	λVer
1	Si	0							
			1-2	1	1	1	Si	36.3	Si, (<200)
2	Si	200							

Verifica a svergolamento §4.2.4.1.3.2 NTC18

X	Comb.	Sfruttamento	Classe	Obblig.	Mx,Ed	Mb,Rd,x	χ,LT	λ adim. LT	L,LT	M,critico	Verifica
100	SLU 56	0.008	1	Si	-11680.4	1465861.3	0.984	0.442	200	8010168.9	Si

Verifica a svergolamento SLD §4.2.4.1.3.2 NTC18

X	Comb.	Sfruttamento	Classe	Obblig.	Mx,Ed	Mb,Rd,x	χ,LT	λ adim. LT	L,LT	M,critico	Verifica
100	SLD 3	0.002	1	Si	-2528	1465861.3	0.984	0.442	200	8010168.9	Si

Verifica a svergolamento con trazione §4.2.4.1.3.2 NTC18 - §5.5.3 ENV 1993-1-1:1994

X	Comb.	Sfruttamento	Classe	Obblig.	NEd	Mx,Ed	Mx,Eff,Ed	Mb,Rd,x	χ,LT	λ adim. LT	L,LT	M,critico	Verifica
100	SLU 129	0.011	1	Si	81.1	-16183	-15728.5	1465861.3	0.984	0.442	200	8010168.9	Si

Verifica di stabilità a taglio anima Y §4.2.4.1.2.4 [4.2.27] NTC18

η	hw	tw	hw/tw max	Verifica
1.2	18.8	0.7	55.46	Si

Verifica di stabilità a taglio anima Y SLD §4.2.4.1.2.4 [4.2.27] NTC18

η	hw	tw	hw/tw max	Verifica
1.2	18.8	0.7	55.46	Si

Verifiche a deformabilità

Mensola X: No; Mensola Y: No.

Frecce lungo X

Ascissa freccia	Combinazione	Freccia	Luce	L/f	L/f,min	Tipo	Verifica
26.7	SLE RA 1	0	200	10000	250	Totale	Si
193.3	SLE RA 31	0	200	10000	250	Totale	Si
26.7	SLE RA 30	0	200	10000	250	Totale	Si
193.3	SLE RA 29	0	200	10000	250	Totale	Si
26.7	SLE RA 28	0	200	10000	250	Totale	Si
6.7	SLE RA 2	0	200	10000	350	Variabile	Si
193.3	SLE RA 31	0	200	10000	350	Variabile	Si
60	SLE RA 30	0	200	10000	350	Variabile	Si
160	SLE RA 29	0	200	10000	350	Variabile	Si
146.7	SLE RA 28	0	200	10000	350	Variabile	Si

Frecce lungo Y

Ascissa freccia	Combinazione	Freccia	Luce	L/f	L/f,min	Tipo	Verifica
100	SLE RA 1	-0.001	200	10000	250	Totale	Si
100	SLE RA 31	-0.005	200	10000	250	Totale	Si
100	SLE RA 30	-0.005	200	10000	250	Totale	Si
100	SLE RA 29	-0.004	200	10000	250	Totale	Si
100	SLE RA 28	-0.004	200	10000	250	Totale	Si
0	SLE RA 2	0	200	10000	350	Variabile	Si
100	SLE RA 31	-0.004	200	10000	350	Variabile	Si
100	SLE RA 30	-0.004	200	10000	350	Variabile	Si
100	SLE RA 29	-0.003	200	10000	350	Variabile	Si
100	SLE RA 28	-0.003	200	10000	350	Variabile	Si

Superelemento in acciaio composto dall'asta 205

Caratteristiche del materiale

Acciaio: S275, fyk = 2750

Caratteristiche geometriche

Lunghezza: 200
Nodo iniziale: 102 Nodo finale: 100
Cerniera iniziale: Svincolo: M2, M3 Cerniera finale: Svincolo: M2, M3

Sovraresistenza: 0% Sisma Z: No

Caratteristiche della sezione

Sezione	Rotazione	Area	Jx	Jy	ix	iy	Wx	Wy	Wplx	Wply
HEA220	0	64.41	5414.71	1954.65	9.17	5.51	515.69	177.7	569.03	270.66

Verifiche di resistenza

Verifica a taglio Y §4.2.4.1.2.4 NTC18

X	Comb.	Sfruttamento	VEd	Vc,Rd	Av	Interazione taglio-torsione	Riduzione torsione	Verifica
200	SLU 85	0.355	-11135.4	31335.9	20.74	Considerata	1	Si

Verifica a taglio Y SLD §4.2.4.1.2.4 NTC18

X	Comb.	Sfruttamento	VEd	Vc,Rd	Av	Interazione taglio-torsione	Riduzione torsione	Verifica
0	SLD 1	0.002	50.6	31355.9	20.74	Considerata	1	Si

Verifica a torsione §4.2.4.1.2.5 NTC18

X	Comb.	Sfruttamento torsione	TEd	TRd	Riduzione taglio resistente	Sfruttamento taglio-torsione	τEd,totale	τRd	Verifica
100	SLU 85	0.002	-47.4	29789.6	Considerata				Si

Verifica a flessione semplice X §§ 4.2.4.1.2.3 - 4.2.4.1.2.6 - 4.2.4.1.2.7 - 4.2.4.1.2.8 NTC18

X	Comb.	Sfruttamento	Classe	Mx,Ed	Mx,Rd	Rid. Mx,Rd da VEd	ρx	ρy	Verifica
100	SLU 117	0.374	1	-556738.1	1490312.5	1	0	0	Si

Verifica a flessione semplice X SLD §§ 4.2.4.1.2.3 - 4.2.4.1.2.6 - 4.2.4.1.2.7 - 4.2.4.1.2.8 NTC18

X	Comb.	Sfruttamento	Classe	Mx,Ed	Mx,Rd	Rid. Mx,Rd da VEd	ρx	ρy	Verifica
100	SLD 15	0.002	1	-2528	1490312.5	1	0	0	Si

Verifiche ad instabilità

Caratteristiche iniziali

Membratura principale per controllo snellezza; Calcolo di snellezze ed N critici condotti secondo gli assi principali;
Curva X: b; Curva Y: c; Svergolamento: Carico all'estradosso; Curva svergolamento: b;

Dati per instabilità attorno a x

Numero rit.	Presente	Ascissa	Campata	βx/m	Vincolo a entrambi estremi	λx/m	λVer
1	Si	0					
			1-2	1	Si	21.8	Si, (<200)
2	Si	200					

Dati per instabilità attorno a y

Numero rit.	Presente	Ascissa	Campata	βy/n	k,LT	kw,LT	Vincolo a entrambi estremi	λy/n	λVer
1	Si	0							
			1-2	1	1	1	Si	36.3	Si, (<200)
2	Si	200							

Verifica a svergolamento §4.2.4.1.3.2 NTC18

X	Comb.	Sfruttamento	Classe	Obblig.	Mx,Ed	Mb,Rd,x	χ,LT	λ adim. LT	L,LT	M,critico	Verifica
100	SLU 117	0.38	1	Si	-556738.1	1465861.3	0.984	0.442	200	8010168.9	Si

Verifica a svergolamento SLD §4.2.4.1.3.2 NTC18

X	Comb.	Sfruttamento	Classe	Obblig.	Mx,Ed	Mb,Rd,x	χ,LT	λ adim. LT	L,LT	M,critico	Verifica
100	SLD 15	0.002	1	Si	-2528	1465861.3	0.984	0.442	200	8010168.9	Si

Verifica di stabilità a taglio anima Y §4.2.4.1.2.4 [4.2.27] NTC18

η	hw	tw	hw/tw max	Verifica
1.2	18.8	0.7	55.46	Si

Verifica di stabilità a taglio anima Y SLD §4.2.4.1.2.4 [4.2.27] NTC18

η	hw	tw	hw/tw max	Verifica
1.2	18.8	0.7	55.46	Si

Verifiche a deformabilità

Mensola X: No; Mensola Y: No.

Frecce lungo X

Ascissa freccia	Combinazione	Freccia	Luce	L/f	L/f,min	Tipo	Verifica
0	SLE RA 1	0	200	10000	250	Totale	Si
140	SLE RA 31	0	200	10000	250	Totale	Si
13.3	SLE RA 30	0	200	10000	250	Totale	Si
140	SLE RA 29	0	200	10000	250	Totale	Si
13.3	SLE RA 28	0	200	10000	250	Totale	Si
20	SLE RA 2	0	200	10000	350	Variabile	Si
140	SLE RA 31	0	200	10000	350	Variabile	Si
13.3	SLE RA 30	0	200	10000	350	Variabile	Si
140	SLE RA 29	0	200	10000	350	Variabile	Si
13.3	SLE RA 28	0	200	10000	350	Variabile	Si

Frecce lungo Y

Ascissa freccia	Combinazione	Freccia	Luce	L/f	L/f,min	Tipo	Verifica
100	SLE RA 18	-0.169	200	1184.1	250	Totale	Si
100	SLE RA 19	-0.169	200	1184.1	250	Totale	Si
100	SLE RA 6	-0.166	200	1204.2	250	Totale	Si
100	SLE RA 7	-0.166	200	1204.2	250	Totale	Si
100	SLE RA 14	-0.166	200	1204.4	250	Totale	Si

Ascissa freccia	Combinazione	Freccia	Luce	L/f	L/f,min	Tipo	Verifica
100	SLE RA 18	-0.168	200	1192.2	350	Variabile	Si
100	SLE RA 19	-0.168	200	1192.2	350	Variabile	Si
100	SLE RA 6	-0.165	200	1212.6	350	Variabile	Si
100	SLE RA 7	-0.165	200	1212.6	350	Variabile	Si
100	SLE RA 14	-0.165	200	1212.8	350	Variabile	Si

Superelemento in acciaio composto dall'asta 206

Caratteristiche del materiale

Acciaio: S275, fyk = 2750

Caratteristiche geometriche

Lunghezza: 200
Nodo iniziale: 101 Nodo finale: 99
Cerniera iniziale: Svincolo: M2, M3 Cerniera finale: Svincolo: M2, M3
Sovraresistenza: 0% Sisma Z: No

Caratteristiche della sezione

Sezione	Rotazione	Area	Jx	Jy	ix	iy	Wx	Wy	Wplx	Wply
HEA220	0	64.41	5414.71	1954.65	9.17	5.51	515.69	177.7	569.03	270.66

Verifiche di resistenza

Verifica a taglio Y §4.2.4.1.2.4 NTC18

X	Comb.	Sfruttamento	VEd	Vc,Rd	Av	Interazione taglio-torsione	Riduzione torsione	Verifica
200	SLU 118	0.349	-10930.6	31335.9	20.74	Considerata	1	Si

Verifica a taglio Y SLD §4.2.4.1.2.4 NTC18

X	Comb.	Sfruttamento	VEd	Vc,Rd	Av	Interazione taglio-torsione	Riduzione torsione	Verifica
0	SLD 1	0.002	50.6	31355.9	20.74	Considerata	1	Si

Verifica a torsione §4.2.4.1.2.5 NTC18

X	Comb.	Sfruttamento torsione	TEd	TRd	Riduzione taglio resistente	Sfruttamento taglio-torsione	τEd,totale	τRd	Verifica
100	SLU 85	0.002	47.4	29789.6	Considerata				Si

Verifica a flessione semplice X §§ 4.2.4.1.2.3 - 4.2.4.1.2.6 - 4.2.4.1.2.7 - 4.2.4.1.2.8 NTC18

X	Comb.	Sfruttamento	Classe	Mx,Ed	Mx,Rd	Rid. Mx,Rd da VEd	ρx	ρy	Verifica
100	SLU 84	0.367	1	-546497.6	1490312.5	1	0	0	Si

Verifica a flessione semplice X SLD §§ 4.2.4.1.2.3 - 4.2.4.1.2.6 - 4.2.4.1.2.7 - 4.2.4.1.2.8 NTC18

X	Comb.	Sfruttamento	Classe	Mx,Ed	Mx,Rd	Rid. Mx,Rd da VEd	ρx	ρy	Verifica
100	SLD 3	0.002	1	-2528	1490312.5	1	0	0	Si

Verifiche ad instabilità

Caratteristiche iniziali

Membratura principale per controllo snellezza; Calcolo di snellezze ed N critici condotti secondo gli assi principali;
Curva X: b; Curva Y: c; Svergolamento: Carico all'estradosso; Curva svergolamento: b;

Dati per instabilità attorno a x

Numero rit.	Presente	Ascissa	Campata	βx/m	Vincolo a entrambi estremi	λx/m	λVer
1	Si	0					
			1-2	1	Si	21.8	Si, (<200)
2	Si	200					

Dati per instabilità attorno a y

Numero rit.	Presente	Ascissa	Campata	βy/n	k,LT	kw,LT	Vincolo a entrambi estremi	λy/n	λVer
1	Si	0							
			1-2	1	1	1	Si	36.3	Si, (<200)
2	Si	200							

Verifica a svergolamento §4.2.4.1.3.2 NTC18

X	Comb.	Sfruttamento	Classe	Obblig.	Mx,Ed	Mb,Rd,x	χ,LT	λ adim. LT	L,LT	M,critico	Verifica
100	SLU 84	0.373	1	Si	-546497.6	1465861.3	0.984	0.442	200	8010168.9	Si

Verifica a svergolamento SLD §4.2.4.1.3.2 NTC18

X	Comb.	Sfruttamento	Classe	Obblig.	Mx,Ed	Mb,Rd,x	χ,LT	λ adim. LT	L,LT	M,critico	Verifica
100	SLD 3	0.002	1	Si	-2528	1465861.3	0.984	0.442	200	8010168.9	Si

Verifica di stabilità a taglio anima Y §4.2.4.1.2.4 [4.2.27] NTC18

η	hw	tw	hw/tw max	Verifica
1.2	18.8	0.7	55.46	Si

Verifica di stabilità a taglio anima Y SLD §4.2.4.1.2.4 [4.2.27] NTC18

η	hw	tw	hw/tw max	Verifica
1.2	18.8	0.7	55.46	Si

Verifiche a deformabilità

Mensola X: No; Mensola Y: No.

Frecce lungo X

Ascissa freccia	Combinazione	Freccia	Luce	L/f	L/f,min	Tipo	Verifica
0	SLE RA 1	0	200	10000	250	Totale	Si
60	SLE RA 31	0	200	10000	250	Totale	Si
193.3	SLE RA 30	0	200	10000	250	Totale	Si
60	SLE RA 29	0	200	10000	250	Totale	Si
6.7	SLE RA 28	0	200	10000	250	Totale	Si
20	SLE RA 2	0	200	10000	350	Variabile	Si
60	SLE RA 31	0	200	10000	350	Variabile	Si
193.3	SLE RA 30	0	200	10000	350	Variabile	Si
60	SLE RA 29	0	200	10000	350	Variabile	Si
6.7	SLE RA 28	0	200	10000	350	Variabile	Si

Frecce lungo Y

Ascissa freccia	Combinazione	Freccia	Luce	L/f	L/f,min	Tipo	Verifica
100	SLE RA 18	-0.166	200	1206.3	250	Totale	Si
100	SLE RA 19	-0.166	200	1206.3	250	Totale	Si
100	SLE RA 6	-0.165	200	1212.7	250	Totale	Si
100	SLE RA 7	-0.165	200	1212.7	250	Totale	Si
100	SLE RA 14	-0.164	200	1218.7	250	Totale	Si
100	SLE RA 18	-0.165	200	1214.7	350	Variabile	Si
100	SLE RA 19	-0.165	200	1214.7	350	Variabile	Si
100	SLE RA 6	-0.164	200	1221.2	350	Variabile	Si
100	SLE RA 7	-0.164	200	1221.2	350	Variabile	Si
100	SLE RA 14	-0.163	200	1227.3	350	Variabile	Si

Superelemento in acciaio composto dall'asta 207

Caratteristiche del materiale

Acciaio: S275, fyk = 2750

Caratteristiche geometriche

Lunghezza: 200
Nodo iniziale: 118 Nodo finale: 117
Cerniera iniziale: Svincolo: M2, M3 Cerniera finale: Svincolo: M2, M3
Sovraresistenza: 0% Sisma Z: No

Caratteristiche della sezione

Sezione	Rotazione	Area	Jx	Jy	ix	iy	Wx	Wy	Wplx	Wply
HEA240	0	76.92	7771.3	2768.96	10.05	6	675.77	230.75	745.47	351.79

Verifiche di resistenza

Verifiche a forza assiale §4.2.4.1.2.1 - §4.2.4.1.2.2 NTC18

X	Comb.	Sfruttamento	Classe	NEd	Nc,Rd	Nt,Rd	Riduzione da taglio	ρx	ρy	Verifica
0	SLV 5	0.001		165.7		201468.8	1	0	0	Si

Verifica a taglio Y §4.2.4.1.2.4 NTC18

X	Comb.	Sfruttamento	VEd	Vc,Rd	Av	Interazione taglio-torsione	Riduzione torsione	Verifica
200	SLU 118	0.571	-21825.9	38202.6	25.26	Considerata	1	Si

Verifica a taglio Y SLD §4.2.4.1.2.4 NTC18

X	Comb.	Sfruttamento	VEd	Vc,Rd	Av	Interazione taglio-torsione	Riduzione torsione	Verifica
0	SLD 1	0.002	60.4	38202.6	25.26	Considerata	1	Si

Verifica a flessione semplice X §§ 4.2.4.1.2.3 - 4.2.4.1.2.6 - 4.2.4.1.2.7 - 4.2.4.1.2.8 NTC18

X	Comb.	Sfruttamento	Classe	Mx,Ed	Mx,Rd	Rid. Mx,Rd da VEd	ρx	ρy	Verifica
100	SLU 117	0.559	1	-1091264.1	1952422.8	1	0	0	Si

Verifica a flessione semplice X SLD §§ 4.2.4.1.2.3 - 4.2.4.1.2.6 - 4.2.4.1.2.7 - 4.2.4.1.2.8 NTC18

X	Comb.	Sfruttamento	Classe	Mx,Ed	Mx,Rd	Rid. Mx,Rd da VEd	ρx	ρy	Verifica
100	SLD 8	0.002	1	-3019.3	1952422.8	1	0	0	Si

Verifica a presso/tenso flessione retta X §§ 4.2.4.1.2.3 - 4.2.4.1.2.6 - 4.2.4.1.2.7 - 4.2.4.1.2.8 NTC18

Verifiche eseguite utilizzando la formula conservativa (6.2) §6.2.1 EN 1993-1-1:2005.

X	Comb.	Sfruttamento	Classe	NEd	NRd	Rid. NRd da VEd	Mx,Ed	Mx,Rd	Rid. Mx,Rd da VEd	Rid. Mx,Rd da NEd	ρx	ρy	Verifica
100	SLV 5	0.002	1	165.7	201468.8	1	-3019	1952423	1		0	0	Si

Verifiche ad instabilità

Caratteristiche iniziali

Membratura principale per controllo snellezza; Calcolo di snellezze ed N critici condotti secondo gli assi principali;
Curva X: b; Curva Y: c; Svergolamento: Carico all'estradosso; Curva svergolamento: b;

Dati per instabilità attorno a x

Numero rit.	Presente	Ascissa	Campata	βx/m	Vincolo a entrambi estremi	λx/m	λVer
1	Si	0					
			1-2	1	Si	19.9	Si, (<200)
2	Si	200					

Dati per instabilità attorno a y

Numero rit.	Presente	Ascissa	Campata	βy/n	k,LT	kw,LT	Vincolo a entrambi estremi	λy/n	λVer
1	Si	0							
			1-2	1	1	1	Si	33.3	Si, (<200)
2	Si	200							

Verifica a svergolamento §4.2.4.1.3.2 NTC18

X	Comb.	Sfruttamento	Classe	Obblig.	Mx,Ed	Mb,Rd,x	χ,LT	λ adim. LT	L,LT	M,critico	Verifica
100	SLU 117	0.561	1	Si	-1091264.1	1945000.5	0.996	0.41	200	12206372.3	Si

Verifica a svergolamento SLD §4.2.4.1.3.2 NTC18

X	Comb.	Sfruttamento	Classe	Obblig.	Mx,Ed	Mb,Rd,x	χ,LT	λ adim. LT	L,LT	M,critico	Verifica
100	SLD 8	0.002	1	Si	-3019.3	1945000.5	0.996	0.41	200	12206372.3	Si

Verifica a svergolamento con trazione §4.2.4.1.3.2 NTC18 - §5.5.3 ENV 1993-1-1:1994

X	Comb.	Sfruttamento	Classe	Obblig.	NEd	Mx,Ed	Mx,Eff,Ed	Mb,Rd,x	χ,LT	λ adim. LT	L,LT	M,critico	Verifica
100	SLV 10	0.001	1	Si	165.7	-3019.3	-2000.5	1945000.5	0.996	0.41	200	12206372.3	Si

Verifica di stabilità per pressoflessione §C.4.2.4.1.3.3.2 NTC18

X	Comb.	Sfruttamento	Classe	NEd	NRk	Mx,Ed max	Mx,Rk	My,Ed max	My,Rk	χ,x	χ,y	kxx	kxy	kyx	kyy	χ,LT	Verifica
200	SLV 12	0.002	1	-164.4	211542.2	3019.3	2050044	0	967432.2	0.99	0.906	0.95	0.36	0.984	0.6	0.996	Si

Verifica di stabilità a taglio anima Y §4.2.4.1.2.4 [4.2.27] NTC18

η	hw	tw	hw/tw max	Verifica
1.2	20.6	0.8	55.46	Si

Verifica di stabilità a taglio anima Y SLD §4.2.4.1.2.4 [4.2.27] NTC18

η	hw	tw	hw/tw max	Verifica
1.2	20.6	0.8	55.46	Si

Verifiche a deformabilità

Mensola X: No; Mensola Y: No.

Frecce lungo X

Ascissa freccia	Combinazione	Freccia	Luce	L/f	L/f,min	Tipo	Verifica
100	SLE RA 1	0	200	10000	250	Totale	Si
113.3	SLE RA 31	0	200	10000	250	Totale	Si
113.3	SLE RA 30	0	200	10000	250	Totale	Si
113.3	SLE RA 29	0	200	10000	250	Totale	Si
113.3	SLE RA 28	0	200	10000	250	Totale	Si
100	SLE RA 2	0	200	10000	350	Variabile	Si
113.3	SLE RA 31	0	200	10000	350	Variabile	Si
113.3	SLE RA 30	0	200	10000	350	Variabile	Si
113.3	SLE RA 29	0	200	10000	350	Variabile	Si
113.3	SLE RA 28	0	200	10000	350	Variabile	Si

Frecce lungo Y

Ascissa freccia	Combinazione	Freccia	Luce	L/f	L/f,min	Tipo	Verifica
100	SLE RA 18	-0.241	200	831.1	250	Totale	Si
100	SLE RA 19	-0.241	200	831.1	250	Totale	Si
100	SLE RA 6	-0.239	200	836	250	Totale	Si
100	SLE RA 7	-0.239	200	836	250	Totale	Si
100	SLE RA 15	-0.238	200	840	250	Totale	Si
100	SLE RA 19	-0.24	200	834.6	350	Variabile	Si
100	SLE RA 18	-0.24	200	834.6	350	Variabile	Si
100	SLE RA 6	-0.238	200	839.5	350	Variabile	Si
100	SLE RA 7	-0.238	200	839.5	350	Variabile	Si
100	SLE RA 15	-0.237	200	843.5	350	Variabile	Si

Superelemento in acciaio composto dall'asta 208

Caratteristiche del materiale

Acciaio: S275, fyk = 2750

Caratteristiche geometriche

Lunghezza: 200
Nodo iniziale: 78 Nodo finale: 76
Cerniera iniziale: Svincolo: M2, M3 Cerniera finale: Svincolo: M2, M3
Sovraresistenza: 0% Sisma Z: No

Caratteristiche della sezione

Sezione	Rotazione	Area	Jx	Jy	ix	iy	Wx	Wy	Wplx	Wply
HEA220	0	64.41	5414.71	1954.65	9.17	5.51	515.69	177.7	569.03	270.66

Verifiche di resistenza

Verifica a taglio Y §4.2.4.1.2.4 NTC18

X	Comb.	Sfruttamento	VEd	Vc,Rd	Av	Interazione taglio-torsione	Riduzione torsione	Verifica
200	SLU 132	0.013	-421.8	31331.4	20.74	Considerata	1	Si

Verifica a taglio Y SLD §4.2.4.1.2.4 NTC18

X	Comb.	Sfruttamento	VEd	Vc,Rd	Av	Interazione taglio-torsione	Riduzione torsione	Verifica
200	SLD 2	0.002	-50.6	31355.9	20.74	Considerata	1	Si

Verifica a torsione §4.2.4.1.2.5 NTC18

X	Comb.	Sfruttamento torsione	TEd	TRd	Riduzione taglio resistente	Sfruttamento taglio-torsione	τEd,totale	τRd	Verifica
193.3	SLU 73	0.003	-77.6	29789.6	Considerata				Si

Verifica a flessione semplice X §§ 4.2.4.1.2.3 - 4.2.4.1.2.6 - 4.2.4.1.2.7 - 4.2.4.1.2.8 NTC18

X	Comb.	Sfruttamento	Classe	Mx,Ed	Mx,Rd	Rid. Mx,Rd da VEd	ρx	ρy	Verifica
100	SLU 96	0.014	1	-21091.5	1490312.5	1	0	0	Si

Verifica a flessione semplice X SLD §§ 4.2.4.1.2.3 - 4.2.4.1.2.6 - 4.2.4.1.2.7 - 4.2.4.1.2.8 NTC18

X	Comb.	Sfruttamento	Classe	Mx,Ed	Mx,Rd	Rid. Mx,Rd da VEd	ρx	ρy	Verifica
100	SLD 15	0.002	1	-2528	1490312.5	1	0	0	Si

Verifiche ad instabilità

Caratteristiche iniziali

Membratura principale per controllo snellezza; Calcolo di snellezze ed N critici condotti secondo gli assi principali;
Curva X: b; Curva Y: c; Svergolamento: Carico all'estradosso; Curva svergolamento: b;

Dati per instabilità attorno a x

Numero rit.	Presente	Ascissa	Campata	βx/m	Vincolo a entrambi estremi	λx/m	λVer
1	Si	0					
			1-2	1	Si	21.8	Si, (<200)
2	Si	200					

Dati per instabilità attorno a y

Numero rit.	Presente	Ascissa	Campata	βy/n	k,LT	kw,LT	Vincolo a entrambi estremi	λy/n	λVer
1	Si	0							
			1-2	1	1	1	Si	36.3	Si, (<200)
2	Si	200							

Verifica a svergolamento §4.2.4.1.3.2 NTC18

X	Comb.	Sfruttamento	Classe	Obblig.	Mx,Ed	Mb,Rd,x	χ,LT	λ adim. LT	L,LT	M,critico	Verifica
100	SLU 96	0.014	1	Si	-21091.5	1465861.3	0.984	0.442	200	8010168.9	Si

Verifica a svergolamento SLD §4.2.4.1.3.2 NTC18

X	Comb.	Sfruttamento	Classe	Obblig.	Mx,Ed	Mb,Rd,x	χ,LT	λ adim. LT	L,LT	M,critico	Verifica
100	SLD 15	0.002	1	Si	-2528	1465861.3	0.984	0.442	200	8010168.9	Si

Verifica di stabilità a taglio anima Y §4.2.4.1.2.4 [4.2.27] NTC18

η	hw	tw	hw/tw max	Verifica
1.2	18.8	0.7	55.46	Si

Verifica di stabilità a taglio anima Y SLD §4.2.4.1.2.4 [4.2.27] NTC18

η	hw	tw	hw/tw max	Verifica
1.2	18.8	0.7	55.46	Si

Verifiche a deformabilità

Mensola X: No; Mensola Y: No.

Frecce lungo X

Ascissa freccia	Combinazione	Freccia	Luce	L/f	L/f,min	Tipo	Verifica
193.3	SLE RA 1	0	200	10000	250	Totale	Si
26.7	SLE RA 31	0	200	10000	250	Totale	Si
193.3	SLE RA 30	0	200	10000	250	Totale	Si
26.7	SLE RA 29	0	200	10000	250	Totale	Si
193.3	SLE RA 28	0	200	10000	250	Totale	Si
26.7	SLE RA 2	0	200	10000	350	Variabile	Si
26.7	SLE RA 31	0	200	10000	350	Variabile	Si
33.3	SLE RA 30	0	200	10000	350	Variabile	Si
26.7	SLE RA 29	0	200	10000	350	Variabile	Si
33.3	SLE RA 28	0	200	10000	350	Variabile	Si

Frecce lungo Y

Ascissa freccia	Combinazione	Freccia	Luce	L/f	L/f,min	Tipo	Verifica
100	SLE RA 1	-0.001	200	10000	250	Totale	Si
100	SLE RA 31	-0.007	200	10000	250	Totale	Si
100	SLE RA 30	-0.007	200	10000	250	Totale	Si
100	SLE RA 29	-0.006	200	10000	250	Totale	Si
100	SLE RA 28	-0.006	200	10000	250	Totale	Si
26.7	SLE RA 2	0	200	10000	350	Variabile	Si
100	SLE RA 31	-0.005	200	10000	350	Variabile	Si
100	SLE RA 30	-0.005	200	10000	350	Variabile	Si
100	SLE RA 29	-0.004	200	10000	350	Variabile	Si
100	SLE RA 28	-0.004	200	10000	350	Variabile	Si

Superelemento in acciaio composto dall'asta 209

Caratteristiche del materiale

Acciaio: S275, fyk = 2750

Caratteristiche geometriche

Lunghezza: 200
Nodo iniziale: 77 Nodo finale: 75
Cerniera iniziale: Svincolo: M2, M3 Cerniera finale: Svincolo: M2, M3
Sovraresistenza: 0% Sisma Z: No

Caratteristiche della sezione

Sezione	Rotazione	Area	Jx	Jy	ix	iy	Wx	Wy	Wplx	Wply
HEA220	0	64.41	5414.71	1954.65	9.17	5.51	515.69	177.7	569.03	270.66

Verifiche di resistenza

Verifica a taglio Y §4.2.4.1.2.4 NTC18

X	Comb.	Sfruttamento	VEd	Vc,Rd	Av	Interazione taglio-torsione	Riduzione torsione	Verifica
200	SLU 132	0.013	-421.8	31332.4	20.74	Considerata	1	Si

Verifica a taglio Y SLD §4.2.4.1.2.4 NTC18

X	Comb.	Sfruttamento	VEd	Vc,Rd	Av	Interazione taglio-torsione	Riduzione torsione	Verifica
0	SLD 1	0.002	50.6	31355.9	20.74	Considerata	1	Si

Verifica a torsione §4.2.4.1.2.5 NTC18

X	Comb.	Sfruttamento torsione	TEd	TRd	Riduzione taglio resistente	Sfruttamento taglio-torsione	τEd,totale	τRd	Verifica
186.7	SLU 106	0.003	77.2	29789.6	Considerata				Si

Verifica a flessione semplice X §§ 4.2.4.1.2.3 - 4.2.4.1.2.6 - 4.2.4.1.2.7 - 4.2.4.1.2.8 NTC18

X	Comb.	Sfruttamento	Classe	Mx,Ed	Mx,Rd	Rid. Mx,Rd da VEd	ρx	ρy	Verifica
100	SLU 96	0.014	1	-21091.5	1490312.5	1	0	0	Si

Verifica a flessione semplice X SLD §§ 4.2.4.1.2.3 - 4.2.4.1.2.6 - 4.2.4.1.2.7 - 4.2.4.1.2.8 NTC18

X	Comb.	Sfruttamento	Classe	Mx,Ed	Mx,Rd	Rid. Mx,Rd da VEd	ρx	ρy	Verifica
100	SLD 2	0.002	1	-2528	1490312.5	1	0	0	Si

Verifiche ad instabilità

Caratteristiche iniziali

Membratura principale per controllo snellezza; Calcolo di snellezze ed N critici condotti secondo gli assi principali;
Curva X: b; Curva Y: c; Svergolamento: Carico all'estradosso; Curva svergolamento: b;

Dati per instabilità attorno a x

Numero rit.	Presente	Ascissa	Campata	βx/m	Vincolo a entrambi estremi	λx/m	λVer
1	Si	0					
			1-2	1	Si	21.8	Si, (<200)
2	Si	200					

Dati per instabilità attorno a y

Numero rit.	Presente	Ascissa	Campata	βy/n	k,LT	kw,LT	Vincolo a entrambi estremi	λy/n	λVer
1	Si	0							
			1-2	1	1	1	Si	36.3	Si, (<200)
2	Si	200							

Verifica a svergolamento §4.2.4.1.3.2 NTC18

X	Comb.	Sfruttamento	Classe	Obblig.	Mx,Ed	Mb,Rd,x	χ,LT	λ adim. LT	L,LT	M,critico	Verifica
100	SLU 96	0.014	1	Si	-21091.5	1465861.3	0.984	0.442	200	8010168.9	Si

Verifica a svergolamento SLD §4.2.4.1.3.2 NTC18

X	Comb.	Sfruttamento	Classe	Obblig.	Mx,Ed	Mb,Rd,x	χ,LT	λ adim. LT	L,LT	M,critico	Verifica
100	SLD 2	0.002	1	Si	-2528	1465861.3	0.984	0.442	200	8010168.9	Si

Verifica di stabilità a taglio anima Y §4.2.4.1.2.4 [4.2.27] NTC18

η	hw	tw	hw/tw max	Verifica
1.2	18.8	0.7	55.46	Si

Verifica di stabilità a taglio anima Y SLD §4.2.4.1.2.4 [4.2.27] NTC18

η	hw	tw	hw/tw max	Verifica
1.2	18.8	0.7	55.46	Si

Verifiche a deformabilità

Mensola X: No; Mensola Y: No.

Frecce lungo X

Ascissa freccia	Combinazione	Freccia	Luce	L/f	L/f,min	Tipo	Verifica
193.3	SLE RA 1	0	200	10000	250	Totale	Si
26.7	SLE RA 31	0	200	10000	250	Totale	Si
193.3	SLE RA 30	0	200	10000	250	Totale	Si
26.7	SLE RA 29	0	200	10000	250	Totale	Si

Ascissa freccia	Combinazione	Freccia	Luce	L/f	L/f,min	Tipo	Verifica
193.3	SLE RA 28	0	200	10000	250	Totale	Si
26.7	SLE RA 2	0	200	10000	350	Variabile	Si
26.7	SLE RA 31	0	200	10000	350	Variabile	Si
40	SLE RA 30	0	200	10000	350	Variabile	Si
26.7	SLE RA 29	0	200	10000	350	Variabile	Si
153.3	SLE RA 28	0	200	10000	350	Variabile	Si

Frecce lungo Y

Ascissa freccia	Combinazione	Freccia	Luce	L/f	L/f,min	Tipo	Verifica
100	SLE RA 1	-0.001	200	10000	250	Totale	Si
100	SLE RA 31	-0.007	200	10000	250	Totale	Si
100	SLE RA 30	-0.007	200	10000	250	Totale	Si
100	SLE RA 29	-0.006	200	10000	250	Totale	Si
100	SLE RA 28	-0.006	200	10000	250	Totale	Si
26.7	SLE RA 2	0	200	10000	350	Variabile	Si
100	SLE RA 31	-0.005	200	10000	350	Variabile	Si
100	SLE RA 30	-0.005	200	10000	350	Variabile	Si
100	SLE RA 29	-0.004	200	10000	350	Variabile	Si
100	SLE RA 28	-0.004	200	10000	350	Variabile	Si

Superelemento in acciaio composto dall'asta 210

Caratteristiche del materiale

Acciaio: S275, fyk = 2750

Caratteristiche geometriche

Lunghezza: 200
Nodo iniziale: 44 Nodo finale: 40
Cerniera iniziale: Svincolo: M2, M3 Cerniera finale: Svincolo: M2, M3
Sovraresistenza: 0% Sisma Z: No

Caratteristiche della sezione

Sezione	Rotazione	Area	Jx	Jy	ix	iy	Wx	Wy	Wplx	Wply
HEA220	0	64.41	5414.71	1954.65	9.17	5.51	515.69	177.7	569.03	270.66

Verifiche di resistenza

Verifiche a forza assiale §4.2.4.1.2.1 - §4.2.4.1.2.2 NTC18

X	Comb.	Sfruttamento	Classe	NEd	Nc,Rd	Nt,Rd	Riduzione da taglio	ρx	ρy	Verifica
93.3	SLV 8	0.001		147.7		168683.8	1	0	0	Si

Verifiche a forza assiale SLD §4.2.4.1.2.1 - §4.2.4.1.2.2 NTC18

X	Comb.	Sfruttamento	Classe	NEd	Nc,Rd	Nt,Rd	Riduzione da taglio	ρx	ρy	Verifica
200	SLD 8	0.001		105.2		168683.8	1	0	0	Si

Verifica a taglio Y §4.2.4.1.2.4 NTC18

X	Comb.	Sfruttamento	VEd	Vc,Rd	Av	Interazione taglio-torsione	Riduzione torsione	Verifica
200	SLU 98	0.01	-302.3	31355.9	20.74	Considerata	1	Si

Verifica a taglio Y SLD §4.2.4.1.2.4 NTC18

X	Comb.	Sfruttamento	VEd	Vc,Rd	Av	Interazione taglio-torsione	Riduzione torsione	Verifica
0	SLD 1	0.002	50.6	31355.9	20.74	Considerata	1	Si

Verifica a flessione semplice X §§ 4.2.4.1.2.3 - 4.2.4.1.2.6 - 4.2.4.1.2.7 - 4.2.4.1.2.8 NTC18

X	Comb.	Sfruttamento	Classe	Mx,Ed	Mx,Rd	Rid. Mx,Rd da VEd	ρx	ρy	Verifica
100	SLV 14	0.002	1	-2528	1490312.5	1	0	0	Si

Verifica a flessione semplice X SLD §§ 4.2.4.1.2.3 - 4.2.4.1.2.6 - 4.2.4.1.2.7 - 4.2.4.1.2.8 NTC18

X	Comb.	Sfruttamento	Classe	Mx,Ed	Mx,Rd	Rid. Mx,Rd da VEd	ρx	ρy	Verifica
100	SLD 6	0.002	1	-2528	1490312.5	1	0	0	Si

Verifica a presso/tenso flessione retta X §§ 4.2.4.1.2.3 - 4.2.4.1.2.6 - 4.2.4.1.2.7 - 4.2.4.1.2.8 NTC18

Verifiche eseguite utilizzando la formula conservativa (6.2) §6.2.1 EN 1993-1-1:2005.

X	Comb.	Sfruttamento	Classe	NEd	NRd	Rid. NRd da VEd	Mx,Ed	Mx,Rd	Rid. Mx,Rd da VEd	Rid. Mx,Rd da NEd	ρx	ρy	Verifica
100	SLU 99	0.012	1	144	168683.8	1	-16183	1490313	1		0	0	Si

Verifica a presso/tenso flessione retta X SLD §§ 4.2.4.1.2.3 - 4.2.4.1.2.6 - 4.2.4.1.2.7 - 4.2.4.1.2.8 NTC18

Verifiche eseguite utilizzando la formula conservativa (6.2) §6.2.1 EN 1993-1-1:2005.

X	Comb.	Sfruttamento	Classe	NEd	NRd	Rid. NRd da VEd	Mx,Ed	Mx,Rd	Rid. Mx,Rd da VEd	Rid. Mx,Rd da NEd	ρx	ρy	Verifica
100	SLD 8	0.002	1	105.2	168683.8	1	-2528	1490313	1		0	0	Si

Verifiche ad instabilità

Caratteristiche iniziali

Membratura principale per controllo snellezza; Calcolo di snellezze ed N critici condotti secondo gli assi principali;
Curva X: b; Curva Y: c; Svergolamento: Carico all'estradosso; Curva svergolamento: b;

Dati per instabilità attorno a x

Numero rit.	Presente	Ascissa	Campata	βx/m	Vincolo a entrambi estremi	λx/m	λVer
1	Si	0					
			1-2	1	Si	21.8	Si, (<200)
2	Si	200					

Dati per instabilità attorno a y

Numero rit.	Presente	Ascissa	Campata	βy/n	k,LT	kw,LT	Vincolo a entrambi estremi	λy/n	λVer
1	Si	0							
			1-2	1	1	1	Si	36.3	Si, (<200)
2	Si	200							

Verifica a svergolamento §4.2.4.1.3.2 NTC18

X	Comb.	Sfruttamento	Classe	Obblig.	Mx,Ed	Mb,Rd,x	χ,LT	λ adim. LT	L,LT	M,critico	Verifica
100	SLV 14	0.002	1	Si	-2528	1465861.3	0.984	0.442	200	8010168.9	Si

Verifica a svergolamento SLD §4.2.4.1.3.2 NTC18

X	Comb.	Sfruttamento	Classe	Obblig.	Mx,Ed	Mb,Rd,x	χ,LT	λ adim. LT	L,LT	M,critico	Verifica
100	SLD 6	0.002	1	Si	-2528	1465861.3	0.984	0.442	200	8010168.9	Si

Verifica a svergolamento con trazione §4.2.4.1.3.2 NTC18 - §5.5.3 ENV 1993-1-1:1994

X	Comb.	Sfruttamento	Classe	Obblig.	NEd	Mx,Ed	Mx,Eff,Ed	Mb,Rd,x	χ,LT	λ adim. LT	L,LT	M,critico	Verifica
100	SLU 96	0.01	1	Si	143.8	-16183	-15377.1	1465861.3	0.984	0.442	200	8010168.9	Si

Verifica a svergolamento con trazione SLD §4.2.4.1.3.2 NTC18 - §5.5.3 ENV 1993-1-1:1994

X	Comb.	Sfruttamento	Classe	Obblig.	NEd	Mx,Ed	Mx,Eff,Ed	Mb,Rd,x	χ,LT	λ adim. LT	L,LT	M,critico	Verifica
100	SLD 13	0.001	1	Si	71.1	-2528	-2129.3	1465861.3	0.984	0.442	200	8010168.9	Si

Verifica di stabilità a taglio anima Y §4.2.4.1.2.4 [4.2.27] NTC18

η	hw	tw	hw/tw max	Verifica
1.2	18.8	0.7	55.46	Si

Verifica di stabilità a taglio anima Y SLD §4.2.4.1.2.4 [4.2.27] NTC18

η	hw	tw	hw/tw max	Verifica
1.2	18.8	0.7	55.46	Si

Verifiche a deformabilità

Mensola X: No; Mensola Y: No.

Frecce lungo X

Ascissa freccia	Combinazione	Freccia	Luce	L/f	L/f,min	Tipo	Verifica
193.3	SLE RA 1	0	200	10000	250	Totale	Si
66.7	SLE RA 31	0	200	10000	250	Totale	Si
193.3	SLE RA 30	0	200	10000	250	Totale	Si
66.7	SLE RA 29	0	200	10000	250	Totale	Si
193.3	SLE RA 28	0	200	10000	250	Totale	Si
66.7	SLE RA 2	0	200	10000	350	Variabile	Si
66.7	SLE RA 31	0	200	10000	350	Variabile	Si
193.3	SLE RA 30	0	200	10000	350	Variabile	Si
66.7	SLE RA 29	0	200	10000	350	Variabile	Si
193.3	SLE RA 28	0	200	10000	350	Variabile	Si

Frecce lungo Y

Ascissa freccia	Combinazione	Freccia	Luce	L/f	L/f,min	Tipo	Verifica
100	SLE RA 1	-0.001	200	10000	250	Totale	Si
100	SLE RA 31	-0.005	200	10000	250	Totale	Si
100	SLE RA 30	-0.005	200	10000	250	Totale	Si
100	SLE RA 29	-0.004	200	10000	250	Totale	Si
100	SLE RA 28	-0.004	200	10000	250	Totale	Si
100	SLE RA 2	0	200	10000	350	Variabile	Si
100	SLE RA 31	-0.004	200	10000	350	Variabile	Si
100	SLE RA 30	-0.004	200	10000	350	Variabile	Si
100	SLE RA 29	-0.003	200	10000	350	Variabile	Si
100	SLE RA 28	-0.003	200	10000	350	Variabile	Si

Superelemento in acciaio composto dall'asta 211

Caratteristiche del materiale

Acciaio: S275, fyk = 2750

Caratteristiche geometriche

Lunghezza: 200
Nodo iniziale: 41 Nodo finale: 37
Cerniera iniziale: Svincolo: M2, M3 Cerniera finale: Svincolo: M2, M3
Sovraresistenza: 0% Sisma Z: No

Caratteristiche della sezione

Sezione	Rotazione	Area	Jx	Jy	ix	iy	Wx	Wy	Wplx	Wply
HEA220	0	64.41	5414.71	1954.65	9.17	5.51	515.69	177.7	569.03	270.66

Verifiche di resistenza

Verifiche a forza assiale §4.2.4.1.2.1 - §4.2.4.1.2.2 NTC18

X	Comb.	Sfruttamento	Classe	NEd	Nc,Rd	Nt,Rd	Riduzione da taglio	ρx	ρy	Verifica
200	SLV 12	0.001		147.7		168683.8	1	0	0	Si

Verifiche a forza assiale SLD §4.2.4.1.2.1 - §4.2.4.1.2.2 NTC18

X	Comb.	Sfruttamento	Classe	NEd	Nc,Rd	Nt,Rd	Riduzione da taglio	ρx	ρy	Verifica
200	SLD 11	0.001		105.2		168683.8	1	0	0	Si

Verifica a taglio Y §4.2.4.1.2.4 NTC18

X	Comb.	Sfruttamento	VEd	Vc,Rd	Av	Interazione taglio-torsione	Riduzione torsione	Verifica
200	SLU 97	0.01	-302.3	31355.9	20.74	Considerata	1	Si

Verifica a taglio Y SLD §4.2.4.1.2.4 NTC18

X	Comb.	Sfruttamento	VEd	Vc,Rd	Av	Interazione taglio-torsione	Riduzione torsione	Verifica
0	SLD 1	0.002	50.6	31355.9	20.74	Considerata	1	Si

Verifica a flessione semplice X §§ 4.2.4.1.2.3 - 4.2.4.1.2.6 - 4.2.4.1.2.7 - 4.2.4.1.2.8 NTC18

X	Comb.	Sfruttamento	Classe	Mx,Ed	Mx,Rd	Rid. Mx,Rd da VEd	ρx	ρy	Verifica
100	SLV 2	0.002	1	-2528	1490312.5	1	0	0	Si

Verifica a flessione semplice X SLD §§ 4.2.4.1.2.3 - 4.2.4.1.2.6 - 4.2.4.1.2.7 - 4.2.4.1.2.8 NTC18

X	Comb.	Sfruttamento	Classe	Mx,Ed	Mx,Rd	Rid. Mx,Rd da VEd	ρx	ρy	Verifica
100	SLD 10	0.002	1	-2528	1490312.5	1	0	0	Si

Verifica a presso/tenso flessione retta X §§ 4.2.4.1.2.3 - 4.2.4.1.2.6 - 4.2.4.1.2.7 - 4.2.4.1.2.8 NTC18

Verifiche eseguite utilizzando la formula conservativa (6.2) §6.2.1 EN 1993-1-1:2005.

X	Comb.	Sfruttamento	Classe	NEd	NRd	Rid. NRd da VEd	Mx,Ed	Mx,Rd	Rid. Mx,Rd da VEd	Rid. Mx,Rd da NEd	ρx	ρy	Verifica
100	SLU 132	0.012	1	144	168683.8	1	-16183	1490313	1		0	0	Si

Verifica a presso/tenso flessione retta X SLD §§ 4.2.4.1.2.3 - 4.2.4.1.2.6 - 4.2.4.1.2.7 - 4.2.4.1.2.8 NTC18

Verifiche eseguite utilizzando la formula conservativa (6.2) §6.2.1 EN 1993-1-1:2005.

X	Comb.	Sfruttamento	Classe	NEd	NRd	Rid. NRd da VEd	Mx,Ed	Mx,Rd	Rid. Mx,Rd da VEd	Rid. Mx,Rd da NEd	ρx	ρy	Verifica
100	SLD 11	0.002	1	105.2	168683.8	1	-2528	1490313	1		0	0	Si

Verifiche ad instabilità

Caratteristiche iniziali

Membratura principale per controllo snellezza; Calcolo di snellezze ed N critici condotti secondo gli assi principali;
Curva X: b; Curva Y: c; Svergolamento: Carico all'estradosso; Curva svergolamento: b;

Dati per instabilità attorno a x

Numero rit.	Presente	Ascissa	Campata	βx/m	Vincolo a entrambi estremi	λx/m	λVer
1	Si	0					
			1-2	1	Si	21.8	Si, (<200)
2	Si	200					

Dati per instabilità attorno a y

Numero rit.	Presente	Ascissa	Campata	βy/n	k,LT	kw,LT	Vincolo a entrambi estremi	λy/n	λVer
1	Si	0							
			1-2	1	1	1	Si	36.3	Si, (<200)
2	Si	200							

Verifica a svergolamento §4.2.4.1.3.2 NTC18

X	Comb.	Sfruttamento	Classe	Obblig.	Mx,Ed	Mb,Rd,x	χ,LT	λ adim. LT	L,LT	M,critico	Verifica
100	SLV 2	0.002	1	Si	-2528	1465861.3	0.984	0.442	200	8010168.9	Si

Verifica a svergolamento SLD §4.2.4.1.3.2 NTC18

X	Comb.	Sfruttamento	Classe	Obblig.	Mx,Ed	Mb,Rd,x	χ,LT	λ adim. LT	L,LT	M,critico	Verifica
100	SLD 10	0.002	1	Si	-2528	1465861.3	0.984	0.442	200	8010168.9	Si

Verifica a svergolamento con trazione §4.2.4.1.3.2 NTC18 - §5.5.3 ENV 1993-1-1:1994

X	Comb.	Sfruttamento	Classe	Obblig.	NEd	Mx,Ed	Mx,Eff,Ed	Mb,Rd,x	χ,LT	λ adim. LT	L,LT	M,critico	Verifica
100	SLU 129	0.01	1	Si	143.8	-16183	-15376.9	1465861.3	0.984	0.442	200	8010168.9	Si

Verifica a svergolamento con trazione SLD §4.2.4.1.3.2 NTC18 - §5.5.3 ENV 1993-1-1:1994

X	Comb.	Sfruttamento	Classe	Obblig.	NEd	Mx,Ed	Mx,Eff,Ed	Mb,Rd,x	χ,LT	λ adim. LT	L,LT	M,critico	Verifica
100	SLD 2	0.001	1	Si	71.1	-2528	-2129.3	1465861.3	0.984	0.442	200	8010168.9	Si

Verifica di stabilità a taglio anima Y §4.2.4.1.2.4 [4.2.27] NTC18

η	hw	tw	hw/tw max	Verifica
1.2	18.8	0.7	55.46	Si

Verifica di stabilità a taglio anima Y SLD §4.2.4.1.2.4 [4.2.27] NTC18

η	hw	tw	hw/tw max	Verifica
1.2	18.8	0.7	55.46	Si

Verifiche a deformabilità

Mensola X: No; Mensola Y: No.

Frecce lungo X

Ascissa freccia	Combinazione	Freccia	Luce	L/f	L/f,min	Tipo	Verifica
193.3	SLE RA 1	0	200	10000	250	Totale	Si

Ascissa freccia	Combinazione	Freccia	Luce	L/f	L/f,min	Tipo	Verifica
66.7	SLE RA 31	0	200	10000	250	Totale	Si
193.3	SLE RA 30	0	200	10000	250	Totale	Si
66.7	SLE RA 29	0	200	10000	250	Totale	Si
193.3	SLE RA 28	0	200	10000	250	Totale	Si
66.7	SLE RA 2	0	200	10000	350	Variabile	Si
66.7	SLE RA 31	0	200	10000	350	Variabile	Si
13.3	SLE RA 30	0	200	10000	350	Variabile	Si
66.7	SLE RA 29	0	200	10000	350	Variabile	Si
40	SLE RA 28	0	200	10000	350	Variabile	Si

Frecce lungo Y

Ascissa freccia	Combinazione	Freccia	Luce	L/f	L/f,min	Tipo	Verifica
100	SLE RA 1	-0.001	200	10000	250	Totale	Si
100	SLE RA 31	-0.005	200	10000	250	Totale	Si
100	SLE RA 30	-0.005	200	10000	250	Totale	Si
100	SLE RA 29	-0.004	200	10000	250	Totale	Si
100	SLE RA 28	-0.004	200	10000	250	Totale	Si
100	SLE RA 2	0	200	10000	350	Variabile	Si
100	SLE RA 31	-0.004	200	10000	350	Variabile	Si
100	SLE RA 30	-0.004	200	10000	350	Variabile	Si
100	SLE RA 29	-0.003	200	10000	350	Variabile	Si
100	SLE RA 28	-0.003	200	10000	350	Variabile	Si

Superelemento in acciaio composto dall'asta 212

Caratteristiche del materiale

Acciaio: S275, fyk = 2750

Caratteristiche geometriche

Lunghezza: 200
Nodo iniziale: 100 Nodo finale: 98
Cerniera iniziale: Svincolo: M2, M3 Cerniera finale: Svincolo: M2, M3
Sovraresistenza: 0% Sisma Z: No

Caratteristiche della sezione

Sezione	Rotazione	Area	Jx	Jy	ix	iy	Wx	Wy	Wplx	Wply
HEA220	0	64.41	5414.71	1954.65	9.17	5.51	515.69	177.7	569.03	270.66

Verifiche di resistenza

Verifiche a forza assiale §4.2.4.1.2.1 - §4.2.4.1.2.2 NTC18

X	Comb.	Sfruttamento	Classe	NEd	Nc,Rd	Nt,Rd	Riduzione da taglio	ρx	ρy	Verifica
0	SLV 5	0.001	1	-105	168683.8		1	0	0	Si

Verifica a taglio Y §4.2.4.1.2.4 NTC18

X	Comb.	Sfruttamento	VEd	Vc,Rd	Av	Interazione taglio-torsione	Riduzione torsione	Verifica
200	SLU 118	0.349	-10930.6	31323.3	20.74	Considerata	1	Si

Verifica a taglio Y SLD §4.2.4.1.2.4 NTC18

X	Comb.	Sfruttamento	VEd	Vc,Rd	Av	Interazione taglio-torsione	Riduzione torsione	Verifica
0	SLD 1	0.002	50.6	31355.9	20.74	Considerata	1	Si

Verifica a torsione §4.2.4.1.2.5 NTC18

X	Comb.	Sfruttamento torsione	TEd	TRd	Riduzione taglio resistente	Sfruttamento taglio-torsione	τEd,totale	τRd	Verifica
200	SLU 73	0.003	-77.7	29789.6	Considerata				Si

Verifica a flessione semplice X §§ 4.2.4.1.2.3 - 4.2.4.1.2.6 - 4.2.4.1.2.7 - 4.2.4.1.2.8 NTC18

X	Comb.	Sfruttamento	Classe	Mx,Ed	Mx,Rd	Rid. Mx,Rd da VEd	ρx	ρy	Verifica
100	SLU 84	0.367	1	-546497.6	1490312.5	1	0	0	Si

Verifica a flessione semplice X SLD §§ 4.2.4.1.2.3 - 4.2.4.1.2.6 - 4.2.4.1.2.7 - 4.2.4.1.2.8 NTC18

X	Comb.	Sfruttamento	Classe	Mx,Ed	Mx,Rd	Rid. Mx,Rd da VEd	ρx	ρy	Verifica
100	SLD 16	0.002	1	-2528	1490312.5	1	0	0	Si

Verifica a presso/tenso flessione retta X §§ 4.2.4.1.2.3 - 4.2.4.1.2.6 - 4.2.4.1.2.7 - 4.2.4.1.2.8 NTC18

Verifiche eseguite utilizzando la formula conservativa (6.2) §6.2.1 EN 1993-1-1:2005.

X	Comb.	Sfruttamento	Classe	NEd	NRd	Rid. NRd da VEd	Mx,Ed	Mx,Rd	Rid. Mx,Rd da VEd	Rid. Mx,Rd da NEd	ρx	ρy	Verifica
100	SLV 6	0.002	1	-105	168683.8	1	-2528	1490313	1		0	0	Si

Verifiche ad instabilità

Caratteristiche iniziali

Membratura principale per controllo snellezza; Calcolo di snellezze ed N critici condotti secondo gli assi principali;
Curva X: b; Curva Y: c; Svergolamento: Carico all'estradosso; Curva svergolamento: b;

Dati per instabilità attorno a x

Numero rit.	Presente	Ascissa	Campata	βx/m	Vincolo a entrambi estremi	λx/m	λVer
1	Si	0					

Numero rit.	Presente	Ascissa	Campata	βx/m	Vincolo a entrambi estremi	λx/m	λVer
			1-2	1	Si	21.8	Si, (<200)
2	Si	200					

Dati per instabilità attorno a y

Numero rit.	Presente	Ascissa	Campata	βy/n	k,LT	kw,LT	Vincolo a entrambi estremi	λy/n	λVer
1	Si	0							
			1-2	1	1	1	Si	36.3	Si, (<200)
2	Si	200							

Verifica a svergolamento §4.2.4.1.3.2 NTC18

X	Comb.	Sfruttamento	Classe	Obblig.	Mx,Ed	Mb,Rd,x	χ,LT	λ adim. LT	L,LT	M,critico	Verifica
100	SLU 84	0.373	1	Si	-546497.6	1465861.3	0.984	0.442	200	8010168.9	Si

Verifica a svergolamento SLD §4.2.4.1.3.2 NTC18

X	Comb.	Sfruttamento	Classe	Obblig.	Mx,Ed	Mb,Rd,x	χ,LT	λ adim. LT	L,LT	M,critico	Verifica
100	SLD 16	0.002	1	Si	-2528	1465861.3	0.984	0.442	200	8010168.9	Si

Verifica a svergolamento con trazione §4.2.4.1.3.2 NTC18 - §5.5.3 ENV 1993-1-1:1994

X	Comb.	Sfruttamento	Classe	Obblig.	NEd	Mx,Ed	Mx,Eff,Ed	Mb,Rd,x	χ,LT	λ adim. LT	L,LT	M,critico	Verifica
100	SLV 7	0.001	1	Si	94.6	-2528	-1997.8	1465861.3	0.984	0.442	200	8010168.9	Si

Verifica di stabilità per pressoflessione §C.4.2.4.1.3.3.2 NTC18

X	Comb.	Sfruttamento	Classe	NEd	NRk	Mx,Ed max	Mx,Rk	My,Ed max	My,Rk	χ,x	χ,y	kxx	kxy	kyx	kyy	χ,LT	Verifica
0	SLV 5	0.002	1	-105	177118	2528	1564828.2	0	744316.1	0.982	0.888	0.95	0.36	1	0.6	0.984	Si

Verifica di stabilità a taglio anima Y §4.2.4.1.2.4 [4.2.27] NTC18

η	hw	tw	hw/tw max	Verifica
1.2	18.8	0.7	55.46	Si

Verifica di stabilità a taglio anima Y SLD §4.2.4.1.2.4 [4.2.27] NTC18

η	hw	tw	hw/tw max	Verifica
1.2	18.8	0.7	55.46	Si

Verifiche a deformabilità

Mensola X: No; Mensola Y: No.

Frecce lungo X

Ascissa freccia	Combinazione	Freccia	Luce	L/f	L/f,min	Tipo	Verifica
6.7	SLE RA 1	0	200	10000	250	Totale	Si
6.7	SLE RA 31	0	200	10000	250	Totale	Si
40	SLE RA 30	0	200	10000	250	Totale	Si
6.7	SLE RA 29	0	200	10000	250	Totale	Si
40	SLE RA 28	0	200	10000	250	Totale	Si
13.3	SLE RA 2	0	200	10000	350	Variabile	Si
40	SLE RA 31	0	200	10000	350	Variabile	Si
106.7	SLE RA 30	0	200	10000	350	Variabile	Si
40	SLE RA 29	0	200	10000	350	Variabile	Si
106.7	SLE RA 28	0	200	10000	350	Variabile	Si

Frecce lungo Y

Ascissa freccia	Combinazione	Freccia	Luce	L/f	L/f,min	Tipo	Verifica
100	SLE RA 19	-0.166	200	1206.3	250	Totale	Si
100	SLE RA 18	-0.166	200	1206.3	250	Totale	Si
100	SLE RA 6	-0.165	200	1212.7	250	Totale	Si
100	SLE RA 7	-0.165	200	1212.7	250	Totale	Si
100	SLE RA 15	-0.164	200	1218.7	250	Totale	Si
100	SLE RA 19	-0.165	200	1214.7	350	Variabile	Si
100	SLE RA 18	-0.165	200	1214.7	350	Variabile	Si
100	SLE RA 7	-0.164	200	1221.2	350	Variabile	Si
100	SLE RA 6	-0.164	200	1221.2	350	Variabile	Si
100	SLE RA 15	-0.163	200	1227.3	350	Variabile	Si

Superelemento in acciaio composto dall'asta 213

Caratteristiche del materiale

Acciaio: S275, fyk = 2750

Caratteristiche geometriche

Lunghezza: 200
Nodo iniziale: 99 Nodo finale: 97
Cerniera iniziale: Svincolo: M2, M3 Cerniera finale: Svincolo: M2, M3
Sovraresistenza: 0% Sisma Z: No

Caratteristiche della sezione

Sezione	Rotazione	Area	Jx	Jy	ix	iy	Wx	Wy	Wplx	Wply
HEA220	0	64.41	5414.71	1954.65	9.17	5.51	515.69	177.7	569.03	270.66

Verifiche di resistenza

Verifiche a forza assiale §4.2.4.1.2.1 - §4.2.4.1.2.2 NTC18

X	Comb.	Sfruttamento	Classe	NEd	Nc,Rd	Nt,Rd	Riduzione da taglio	ρx	ρy	Verifica
0	SLV 9	0.001	1	-105	168683.8		1	0	0	Si

Verifica a taglio Y §4.2.4.1.2.4 NTC18

X	Comb.	Sfruttamento	VEd	Vc,Rd	Av	Interazione taglio-torsione	Riduzione torsione	Verifica
200	SLU 118	0.349	-10930.6	31323.5	20.74	Considerata	1	Si

Verifica a taglio Y SLD §4.2.4.1.2.4 NTC18

X	Comb.	Sfruttamento	VEd	Vc,Rd	Av	Interazione taglio-torsione	Riduzione torsione	Verifica
0	SLD 1	0.002	50.6	31355.9	20.74	Considerata	1	Si

Verifica a torsione §4.2.4.1.2.5 NTC18

X	Comb.	Sfruttamento torsione	TEd	TRd	Riduzione taglio resistente	Sfruttamento taglio-torsione	τEd,totale	τRd	Verifica
186.7	SLU 106	0.003	77.5	29789.6	Considerata				Si

Verifica a flessione semplice X §§ 4.2.4.1.2.3 - 4.2.4.1.2.6 - 4.2.4.1.2.7 - 4.2.4.1.2.8 NTC18

X	Comb.	Sfruttamento	Classe	Mx,Ed	Mx,Rd	Rid. Mx,Rd da VEd	ρx	ρy	Verifica
100	SLU 84	0.367	1	-546497.6	1490312.5	1	0	0	Si

Verifica a flessione semplice X SLD §§ 4.2.4.1.2.3 - 4.2.4.1.2.6 - 4.2.4.1.2.7 - 4.2.4.1.2.8 NTC18

X	Comb.	Sfruttamento	Classe	Mx,Ed	Mx,Rd	Rid. Mx,Rd da VEd	ρx	ρy	Verifica
100	SLD 3	0.002	1	-2528	1490312.5	1	0	0	Si

Verifica a presso/tenso flessione retta X §§ 4.2.4.1.2.3 - 4.2.4.1.2.6 - 4.2.4.1.2.7 - 4.2.4.1.2.8 NTC18

Verifiche eseguite utilizzando la formula conservativa (6.2) §6.2.1 EN 1993-1-1:2005.

X	Comb.	Sfruttamento	Classe	NEd	NRd	Rid. NRd da VEd	Mx,Ed	Mx,Rd	Rid. Mx,Rd da VEd	Rid. Mx,Rd da NEd	ρx	ρy	Verifica
100	SLV 9	0.002	1	-105	168683.8	1	-2528	1490313	1		0	0	Si

Verifiche ad instabilità

Caratteristiche iniziali

Membratura principale per controllo snellezza; Calcolo di snellezze ed N critici condotti secondo gli assi principali;
Curva X: b; Curva Y: c; Svergolamento: Carico all'estradosso; Curva svergolamento: b;

Dati per instabilità attorno a x

Numero rit.	Presente	Ascissa	Campata	βx/m	Vincolo a entrambi estremi	λx/m	λVer
1	Si	0					
			1-2	1	Si	21.8	Si, (<200)
2	Si	200					

Dati per instabilità attorno a y

Numero rit.	Presente	Ascissa	Campata	βy/n	k,LT	kw,LT	Vincolo a entrambi estremi	λy/n	λVer
1	Si	0							
			1-2	1	1	1	Si	36.3	Si, (<200)
2	Si	200							

Verifica a svergolamento §4.2.4.1.3.2 NTC18

X	Comb.	Sfruttamento	Classe	Obblig.	Mx,Ed	Mb,Rd,x	χ,LT	λ adim. LT	L,LT	M,critico	Verifica
100	SLU 84	0.373	1	Si	-546497.6	1465861.3	0.984	0.442	200	8010168.9	Si

Verifica a svergolamento SLD §4.2.4.1.3.2 NTC18

X	Comb.	Sfruttamento	Classe	Obblig.	Mx,Ed	Mb,Rd,x	χ,LT	λ adim. LT	L,LT	M,critico	Verifica
100	SLD 3	0.002	1	Si	-2528	1465861.3	0.984	0.442	200	8010168.9	Si

Verifica a svergolamento con trazione §4.2.4.1.3.2 NTC18 - §5.5.3 ENV 1993-1-1:1994

X	Comb.	Sfruttamento	Classe	Obblig.	NEd	Mx,Ed	Mx,Eff,Ed	Mb,Rd,x	χ,LT	λ adim. LT	L,LT	M,critico	Verifica
100	SLV 11	0.001	1	Si	94.6	-2528	-1997.8	1465861.3	0.984	0.442	200	8010168.9	Si

Verifica di stabilità per pressoflessione §C.4.2.4.1.3.3.2 NTC18

X	Comb.	Sfruttamento	Classe	NEd	NRk	Mx,Ed max	Mx,Rk	My,Ed max	My,Rk	χ,x	χ,y	kxx	kxy	kyx	kyy	χ,LT	Verifica
200	SLV 10	0.002	1	-105	177118	2528	1564828.2	0	744316.1	0.982	0.888	0.95	0.36	1	0.6	0.984	Si

Verifica di stabilità a taglio anima Y §4.2.4.1.2.4 [4.2.27] NTC18

η	hw	tw	hw/tw max	Verifica
1.2	18.8	0.7	55.46	Si

Verifica di stabilità a taglio anima Y SLD §4.2.4.1.2.4 [4.2.27] NTC18

η	hw	tw	hw/tw max	Verifica
1.2	18.8	0.7	55.46	Si

Verifiche a deformabilità

Mensola X: No; Mensola Y: No.

Frecce lungo X

Ascissa freccia	Combinazione	Freccia	Luce	L/f	L/f,min	Tipo	Verifica
6.7	SLE RA 1	0	200	10000	250	Totale	Si
6.7	SLE RA 31	0	200	10000	250	Totale	Si
6.7	SLE RA 30	0	200	10000	250	Totale	Si
6.7	SLE RA 29	0	200	10000	250	Totale	Si
6.7	SLE RA 28	0	200	10000	250	Totale	Si
13.3	SLE RA 2	0	200	10000	350	Variabile	Si
13.3	SLE RA 31	0	200	10000	350	Variabile	Si
160	SLE RA 30	0	200	10000	350	Variabile	Si
40	SLE RA 29	0	200	10000	350	Variabile	Si
160	SLE RA 28	0	200	10000	350	Variabile	Si

Frecce lungo Y

Ascissa freccia	Combinazione	Freccia	Luce	L/f	L/f,min	Tipo	Verifica
100	SLE RA 18	-0.166	200	1206.3	250	Totale	Si
100	SLE RA 19	-0.166	200	1206.3	250	Totale	Si
100	SLE RA 6	-0.165	200	1212.7	250	Totale	Si
100	SLE RA 7	-0.165	200	1212.7	250	Totale	Si
100	SLE RA 14	-0.164	200	1218.7	250	Totale	Si
100	SLE RA 19	-0.165	200	1214.7	350	Variabile	Si
100	SLE RA 18	-0.165	200	1214.7	350	Variabile	Si
100	SLE RA 7	-0.164	200	1221.2	350	Variabile	Si
100	SLE RA 6	-0.164	200	1221.2	350	Variabile	Si
100	SLE RA 15	-0.163	200	1227.3	350	Variabile	Si

Superelemento in acciaio composto dall'asta 214

Caratteristiche del materiale

Acciaio: S275, fyk = 2750

Caratteristiche geometriche

Lunghezza: 200
Nodo iniziale: 117 Nodo finale: 116
Cerniera iniziale: Svincolo: M2, M3 Cerniera finale: Svincolo: M2, M3
Sovraresistenza: 0% Sisma Z: No

Caratteristiche della sezione

Sezione	Rotazione	Area	Jx	Jy	ix	iy	Wx	Wy	Wplx	Wply
HEA240	0	76.92	7771.3	2768.96	10.05	6	675.77	230.75	745.47	351.79

Verifiche di resistenza

Verifiche a forza assiale §4.2.4.1.2.1 - §4.2.4.1.2.2 NTC18

X	Comb.	Sfruttamento	Classe	NEd	Nc,Rd	Nt,Rd	Riduzione da taglio	ρx	ρy	Verifica
106.7	SLV 5	0.002		496.9		201468.8	1	0	0	Si

Verifiche a forza assiale SLD §4.2.4.1.2.1 - §4.2.4.1.2.2 NTC18

X	Comb.	Sfruttamento	Classe	NEd	Nc,Rd	Nt,Rd	Riduzione da taglio	ρx	ρy	Verifica
0	SLD 5	0.001		188.9		201468.8	1	0	0	Si

Verifica a taglio Y §4.2.4.1.2.4 NTC18

X	Comb.	Sfruttamento	VEd	Vc,Rd	Av	Interazione taglio-torsione	Riduzione torsione	Verifica
0	SLU 105	0.566	21622.1	38202.6	25.26	Considerata	1	Si

Verifica a taglio Y SLD §4.2.4.1.2.4 NTC18

X	Comb.	Sfruttamento	VEd	Vc,Rd	Av	Interazione taglio-torsione	Riduzione torsione	Verifica
0	SLD 1	0.002	60.4	38202.6	25.26	Considerata	1	Si

Verifica a flessione semplice X §§ 4.2.4.1.2.3 - 4.2.4.1.2.6 - 4.2.4.1.2.7 - 4.2.4.1.2.8 NTC18

X	Comb.	Sfruttamento	Classe	Mx,Ed	Mx,Rd	Rid. Mx,Rd da VEd	ρx	ρy	Verifica
100	SLU 117	0.554	1	-1081103.1	1952422.8	1	0	0	Si

Verifica a flessione semplice X SLD §§ 4.2.4.1.2.3 - 4.2.4.1.2.6 - 4.2.4.1.2.7 - 4.2.4.1.2.8 NTC18

X	Comb.	Sfruttamento	Classe	Mx,Ed	Mx,Rd	Rid. Mx,Rd da VEd	ρx	ρy	Verifica
100	SLD 4	0.002	1	-3019.3	1952422.8	1	0	0	Si

Verifica a presso/tenso flessione retta X §§ 4.2.4.1.2.3 - 4.2.4.1.2.6 - 4.2.4.1.2.7 - 4.2.4.1.2.8 NTC18

Verifiche eseguite utilizzando la formula conservativa (6.2) §6.2.1 EN 1993-1-1:2005.

X	Comb.	Sfruttamento	Classe	NEd	NRd	Rid. NRd da VEd	Mx,Ed	Mx,Rd	Rid. Mx,Rd da VEd	Rid. Mx,Rd da NEd	ρx	ρy	Verifica
100	SLV 6	0.004	1	496.9	201468.8	1	-3019	1952423	1		0	0	Si

Verifica a presso/tenso flessione retta X SLD §§ 4.2.4.1.2.3 - 4.2.4.1.2.6 - 4.2.4.1.2.7 - 4.2.4.1.2.8 NTC18

Verifiche eseguite utilizzando la formula conservativa (6.2) §6.2.1 EN 1993-1-1:2005.

X	Comb.	Sfruttamento	Classe	NEd	NRd	Rid. NRd da VEd	Mx,Ed	Mx,Rd	Rid. Mx,Rd da VEd	Rid. Mx,Rd da NEd	ρx	ρy	Verifica
100	SLD 6	0.002	1	188.9	201468.8	1	-3019	1952423	1		0	0	Si

Verifiche ad instabilità

Caratteristiche iniziali

Membratura principale per controllo snellezza; Calcolo di snellezze ed N critici condotti secondo gli assi principali;
Curva X: b; Curva Y: c; Svergolamento: Carico all'estradosso; Curva svergolamento: b;

Dati per instabilità attorno a x

Numero rit.	Presente	Ascissa	Campata	βx/m	Vincolo a entrambi estremi	λx/m	λVer
1	Si	0					
			1-2	1	Si	19.9	Si, (<200)
2	Si	200					

Dati per instabilità attorno a y

Numero rit.	Presente	Ascissa	Campata	βy/n	k,LT	kw,LT	Vincolo a entrambi estremi	λy/n	λVer
1	Si	0							
			1-2	1	1	1	Si	33.3	Si, (<200)
2	Si	200							

Verifica a svergolamento §4.2.4.1.3.2 NTC18

X	Comb.	Sfruttamento	Classe	Obblig.	Mx,Ed	Mb,Rd,x	χ,LT	λ adim. LT	L,LT	M,critico	Verifica
100	SLU 117	0.556	1	Si	-1081103.1	1945000.5	0.996	0.41	200	12206372.3	Si

Verifica a svergolamento SLD §4.2.4.1.3.2 NTC18

X	Comb.	Sfruttamento	Classe	Obblig.	Mx,Ed	Mb,Rd,x	χ,LT	λ adim. LT	L,LT	M,critico	Verifica
100	SLD 4	0.002	1	Si	-3019.3	1945000.5	0.996	0.41	200	12206372.3	Si

Verifica a svergolamento con trazione §4.2.4.1.3.2 NTC18 - §5.5.3 ENV 1993-1-1:1994

X	Comb.	Sfruttamento	Classe	Obblig.	NEd	Mx,Ed	Mx,Eff,Ed	Mb,Rd,x	χ,LT	λ adim. LT	L,LT	M,critico	Verifica
100	SLV 13	0.001	1	Si	149.6	-3019.3	-2099.4	1945000.5	0.996	0.41	200	12206372.3	Si

Verifica a svergolamento con trazione SLD §4.2.4.1.3.2 NTC18 - §5.5.3 ENV 1993-1-1:1994

X	Comb.	Sfruttamento	Classe	Obblig.	NEd	Mx,Ed	Mx,Eff,Ed	Mb,Rd,x	χ,LT	λ adim. LT	L,LT	M,critico	Verifica
100	SLD 9	0.001	1	Si	188.9	-3019.3	-1857.9	1945000.5	0.996	0.41	200	12206372.3	Si

Verifica di stabilità per pressoflessione §C.4.2.4.1.3.3.2 NTC18

X	Comb.	Sfruttamento	Classe	NEd	NRk	Mx,Ed max	Mx,Rk	My,Ed max	My,Rk	χ,x	χ,y	kxx	kxy	kyx	kyy	χ,LT	Verifica
186.7	SLV 12	0.004	1	-495.4	211542.2	3019.3	2050044	0	967432.2	0.99	0.906	0.95	0.36	0.984	0.6	0.996	Si

Verifica di stabilità per pressoflessione SLD §C.4.2.4.1.3.3.2 NTC18

X	Comb.	Sfruttamento	Classe	NEd	NRk	Mx,Ed max	Mx,Rk	My,Ed max	My,Rk	χ,x	χ,y	kxx	kxy	kyx	kyy	χ,LT	Verifica
200	SLD 12	0.003	1	-187.4	211542.2	3019.3	2050044	0	967432.2	0.99	0.906	0.95	0.36	0.984	0.6	0.996	Si

Verifica di stabilità a taglio anima Y §4.2.4.1.2.4 [4.2.27] NTC18

η	hw	tw	hw/tw max	Verifica
1.2	20.6	0.8	55.46	Si

Verifica di stabilità a taglio anima Y SLD §4.2.4.1.2.4 [4.2.27] NTC18

η	hw	tw	hw/tw max	Verifica
1.2	20.6	0.8	55.46	Si

Verifiche a deformabilità

Mensola X: No; Mensola Y: No.

Frecce lungo X

Ascissa freccia	Combinazione	Freccia	Luce	L/f	L/f,min	Tipo	Verifica
100	SLE RA 1	0	200	10000	250	Totale	Si
53.3	SLE RA 31	0	200	10000	250	Totale	Si
53.3	SLE RA 30	0	200	10000	250	Totale	Si
66.7	SLE RA 29	0	200	10000	250	Totale	Si
66.7	SLE RA 28	0	200	10000	250	Totale	Si
100	SLE RA 2	0	200	10000	350	Variabile	Si
53.3	SLE RA 31	0	200	10000	350	Variabile	Si
53.3	SLE RA 30	0	200	10000	350	Variabile	Si
66.7	SLE RA 29	0	200	10000	350	Variabile	Si
66.7	SLE RA 28	0	200	10000	350	Variabile	Si

Frecce lungo Y

Ascissa freccia	Combinazione	Freccia	Luce	L/f	L/f,min	Tipo	Verifica
100	SLE RA 18	-0.238	200	838.9	250	Totale	Si
100	SLE RA 6	-0.238	200	838.9	250	Totale	Si
100	SLE RA 7	-0.238	200	838.9	250	Totale	Si
100	SLE RA 19	-0.238	200	838.9	250	Totale	Si
100	SLE RA 3	-0.237	200	844.9	250	Totale	Si
100	SLE RA 6	-0.237	200	842.5	350	Variabile	Si
100	SLE RA 18	-0.237	200	842.5	350	Variabile	Si
100	SLE RA 7	-0.237	200	842.5	350	Variabile	Si
100	SLE RA 19	-0.237	200	842.5	350	Variabile	Si
100	SLE RA 2	-0.236	200	848.5	350	Variabile	Si

Superelemento in acciaio composto dall'asta 215

Caratteristiche del materiale

Acciaio: S275, fyk = 2750

Caratteristiche geometriche

Lunghezza: 200
Nodo iniziale: 76 Nodo finale: 74
Cerniera iniziale: Svincolo: M2, M3 Cerniera finale: Svincolo: M2, M3
Sovraresistenza: 0% Sisma Z: No

Caratteristiche della sezione

Sezione	Rotazione	Area	Jx	Jy	ix	iy	Wx	Wy	Wplx	Wply
HEA160	0	38.82	1674.7	615.62	6.57	3.98	220.36	76.95	245.43	117.67

Verifiche di resistenza

Verifiche a forza assiale §4.2.4.1.2.1 - §4.2.4.1.2.2 NTC18

X	Comb.	Sfruttamento	Classe	NEd	Nc,Rd	Nt,Rd	Riduzione da taglio	ρx	ρy	Verifica
200	SLV 10	0		40.1		101662.9	1	0	0	Si

Verifica a taglio Y §4.2.4.1.2.4 NTC18

X	Comb.	Sfruttamento	VEd	Vc,Rd	Av	Interazione taglio-torsione	Riduzione torsione	Verifica
200	SLU 98	0.02	-395.7	20022.2	13.26	Considerata	1	Si

Verifica a taglio Y SLD §4.2.4.1.2.4 NTC18

X	Comb.	Sfruttamento	VEd	Vc,Rd	Av	Interazione taglio-torsione	Riduzione torsione	Verifica
0	SLD 1	0.002	30.5	20030.2	13.26	Considerata	1	Si

Verifica a torsione §4.2.4.1.2.5 NTC18

X	Comb.	Sfruttamento torsione	TEd	TRd	Riduzione taglio resistente	Sfruttamento taglio-torsione	τEd,totale	τRd	Verifica
93.3	SLV 1	0.003	47.3	14685.6	Considerata				Si

Verifica a torsione SLD §4.2.4.1.2.5 NTC18

X	Comb.	Sfruttamento torsione	TEd	TRd	Riduzione taglio resistente	Sfruttamento taglio-torsione	τEd,totale	τRd	Verifica
0	SLD 1	0.002	28.4	14685.6	Considerata				Si

Verifica a flessione semplice X §§ 4.2.4.1.2.3 - 4.2.4.1.2.6 - 4.2.4.1.2.7 - 4.2.4.1.2.8 NTC18

X	Comb.	Sfruttamento	Classe	Mx,Ed	Mx,Rd	Rid. Mx,Rd da VEd	ρx	ρy	Verifica
100	SLU 96	0.031	1	-19785.8	642783.4	1	0	0	Si

Verifica a flessione semplice X SLD §§ 4.2.4.1.2.3 - 4.2.4.1.2.6 - 4.2.4.1.2.7 - 4.2.4.1.2.8 NTC18

X	Comb.	Sfruttamento	Classe	Mx,Ed	Mx,Rd	Rid. Mx,Rd da VEd	ρx	ρy	Verifica
100	SLD 3	0.002	1	-1523.6	642783.4	1	0	0	Si

Verifica a presso/tenso flessione retta X §§ 4.2.4.1.2.3 - 4.2.4.1.2.6 - 4.2.4.1.2.7 - 4.2.4.1.2.8 NTC18

Verifiche eseguite utilizzando la formula conservativa (6.2) §6.2.1 EN 1993-1-1:2005.

X	Comb.	Sfruttamento	Classe	NEd	NRd	Rid. NRd da VEd	Mx,Ed	Mx,Rd	Rid. Mx,Rd da VEd	Rid. Mx,Rd da NEd	ρx	ρy	Verifica
100	SLV 9	0.003	1	40.1	101662.9	1	-1524	642783	1		0	0	Si

Verifiche ad instabilità

Caratteristiche iniziali

Membratura principale per controllo snellezza; Calcolo di snellezze ed N critici condotti secondo gli assi principali;
Curva X: b; Curva Y: c; Svergolamento: Carico all'estradosso; Curva svergolamento: b;

Dati per instabilità attorno a x

Numero rit.	Presente	Ascissa	Campata	βx/m	Vincolo a entrambi estremi	λx/m	λVer
1	Si	0					
			1-2	1	Si	30.4	Si, (<200)
2	Si	200					

Dati per instabilità attorno a y

Numero rit.	Presente	Ascissa	Campata	βy/n	k,LT	kw,LT	Vincolo a entrambi estremi	λy/n	λVer
1	Si	0							
			1-2	1	1	1	Si	50.2	Si, (<200)
2	Si	200							

Verifica a svergolamento §4.2.4.1.3.2 NTC18

X	Comb.	Sfruttamento	Classe	Obblig.	Mx,Ed	Mb,Rd,x	χ,LT	λ adim. LT	L,LT	M,critico	Verifica
100	SLU 96	0.033	1	Si	-19785.8	598018.7	0.93	0.57	200	2075773.7	Si

Verifica a svergolamento SLD §4.2.4.1.3.2 NTC18

X	Comb.	Sfruttamento	Classe	Obblig.	Mx,Ed	Mb,Rd,x	χ,LT	λ adim. LT	L,LT	M,critico	Verifica
100	SLD 3	0.003	1	Si	-1523.6	598018.7	0.93	0.57	200	2075773.7	Si

Verifica a svergolamento con trazione §4.2.4.1.3.2 NTC18 - §5.5.3 ENV 1993-1-1:1994

X	Comb.	Sfruttamento	Classe	Obblig.	NEd	Mx,Ed	Mx,Eff,Ed	Mb,Rd,x	χ,LT	λ adim. LT	L,LT	M,critico	Verifica
100	SLV 6	0.002	1	Si	40.1	-1523.6	-1364.2	598018.7	0.93	0.57	200	2075773.7	Si

Verifica di stabilità a taglio anima Y §4.2.4.1.2.4 [4.2.27] NTC18

η	hw	tw	hw/tw max	Verifica
1.2	13.4	0.6	55.46	Si

Verifica di stabilità a taglio anima Y SLD §4.2.4.1.2.4 [4.2.27] NTC18

η	hw	tw	hw/tw max	Verifica
1.2	13.4	0.6	55.46	Si

Verifiche a deformabilità

Mensola X: No; Mensola Y: No.

Frecce lungo X

Ascissa freccia	Combinazione	Freccia	Luce	L/f	L/f,min	Tipo	Verifica
120	SLE RA 1	0	200	10000	250	Totale	Si
193.3	SLE RA 31	0	200	10000	250	Totale	Si
193.3	SLE RA 30	0	200	10000	250	Totale	Si
193.3	SLE RA 29	0	200	10000	250	Totale	Si
193.3	SLE RA 28	0	200	10000	250	Totale	Si

Ascissa freccia	Combinazione	Freccia	Luce	L/f	L/f,min	Tipo	Verifica
6.7	SLE RA 2	0	200	10000	350	Variabile	Si
193.3	SLE RA 31	0	200	10000	350	Variabile	Si
193.3	SLE RA 30	0	200	10000	350	Variabile	Si
193.3	SLE RA 29	0	200	10000	350	Variabile	Si
193.3	SLE RA 28	0	200	10000	350	Variabile	Si

Frecce lungo Y

Ascissa freccia	Combinazione	Freccia	Luce	L/f	L/f,min	Tipo	Verifica
100	SLE RA 1	-0.002	200	10000	250	Totale	Si
100	SLE RA 31	-0.018	200	10000	250	Totale	Si
100	SLE RA 30	-0.018	200	10000	250	Totale	Si
100	SLE RA 29	-0.015	200	10000	250	Totale	Si
100	SLE RA 28	-0.015	200	10000	250	Totale	Si
13.3	SLE RA 2	0	200	10000	350	Variabile	Si
100	SLE RA 31	-0.016	200	10000	350	Variabile	Si
100	SLE RA 30	-0.016	200	10000	350	Variabile	Si
100	SLE RA 29	-0.013	200	10000	350	Variabile	Si
100	SLE RA 28	-0.013	200	10000	350	Variabile	Si

Superelemento in acciaio composto dall'asta 216

Caratteristiche del materiale

Acciaio: S275, fyk = 2750

Caratteristiche geometriche

Lunghezza: 200
Nodo iniziale: 75 Nodo finale: 73
Cerniera iniziale: Svincolo: M2, M3 Cerniera finale: Svincolo: M2, M3
Sovraresistenza: 0% Sisma Z: No

Caratteristiche della sezione

Sezione	Rotazione	Area	Jx	Jy	ix	iy	Wx	Wy	Wplx	Wply
HEA160	0	38.82	1674.7	615.62	6.57	3.98	220.36	76.95	245.43	117.67

Verifiche di resistenza

Verifiche a forza assiale §4.2.4.1.2.1 - §4.2.4.1.2.2 NTC18

X	Comb.	Sfruttamento	Classe	NEd	Nc,Rd	Nt,Rd	Riduzione da taglio	ρx	ρy	Verifica
0	SLV 5	0		40.1		101662.9	1	0	0	Si

Verifica a taglio Y §4.2.4.1.2.4 NTC18

X	Comb.	Sfruttamento	VEd	Vc,Rd	Av	Interazione taglio-torsione	Riduzione torsione	Verifica
0	SLU 131	0.02	395.7	20022.1	13.26	Considerata	1	Si

Verifica a taglio Y SLD §4.2.4.1.2.4 NTC18

X	Comb.	Sfruttamento	VEd	Vc,Rd	Av	Interazione taglio-torsione	Riduzione torsione	Verifica
0	SLD 14	0.002	30.5	20030.2	13.26	Considerata	1	Si

Verifica a torsione §4.2.4.1.2.5 NTC18

X	Comb.	Sfruttamento torsione	TEd	TRd	Riduzione taglio resistente	Sfruttamento taglio-torsione	τEd,totale	τRd	Verifica
200	SLV 14	0.003	-47.3	14685.6	Considerata				Si

Verifica a torsione SLD §4.2.4.1.2.5 NTC18

X	Comb.	Sfruttamento torsione	TEd	TRd	Riduzione taglio resistente	Sfruttamento taglio-torsione	τEd,totale	τRd	Verifica
200	SLD 14	0.002	-28.4	14685.6	Considerata				Si

Verifica a flessione semplice X §§ 4.2.4.1.2.3 - 4.2.4.1.2.6 - 4.2.4.1.2.7 - 4.2.4.1.2.8 NTC18

X	Comb.	Sfruttamento	Classe	Mx,Ed	Mx,Rd	Rid. Mx,Rd da VEd	ρx	ρy	Verifica
100	SLU 132	0.031	1	-19785.8	642783.4	1	0	0	Si

Verifica a flessione semplice X SLD §§ 4.2.4.1.2.3 - 4.2.4.1.2.6 - 4.2.4.1.2.7 - 4.2.4.1.2.8 NTC18

X	Comb.	Sfruttamento	Classe	Mx,Ed	Mx,Rd	Rid. Mx,Rd da VEd	ρx	ρy	Verifica
100	SLD 14	0.002	1	-1523.6	642783.4	1	0	0	Si

Verifica a presso/tenso flessione retta X §§ 4.2.4.1.2.3 - 4.2.4.1.2.6 - 4.2.4.1.2.7 - 4.2.4.1.2.8 NTC18

Verifiche eseguite utilizzando la formula conservativa (6.2) §6.2.1 EN 1993-1-1:2005.

X	Comb.	Sfruttamento	Classe	NEd	NRd	Rid. NRd da VEd	Mx,Ed	Mx,Rd	Rid. Mx,Rd da VEd	Rid. Mx,Rd da NEd	ρx	ρy	Verifica
100	SLV 6	0.003	1	40.1	101662.9	1	-1524	642783	1		0	0	Si

Verifiche ad instabilità

Caratteristiche iniziali

Membratura principale per controllo snellezza; Calcolo di snellezze ed N critici condotti secondo gli assi principali;
Curva X: b; Curva Y: c; Svergolamento: Carico all'estradosso; Curva svergolamento: b;

Dati per instabilità attorno a x

Numero rit.	Presente	Ascissa	Campata	βx/m	Vincolo a entrambi estremi	λx/m	λVer
1	Si	0					
			1-2	1	Si	30.4	Si, (<200)
2	Si	200					

Dati per instabilità attorno a y

Numero rit.	Presente	Ascissa	Campata	βy/n	k,LT	kw,LT	Vincolo a entrambi estremi	λy/n	λVer
1	Si	0							
			1-2	1	1	1	Si	50.2	Si, (<200)
2	Si	200							

Verifica a svergolamento §4.2.4.1.3.2 NTC18

X	Comb.	Sfruttamento	Classe	Obblig.	Mx,Ed	Mb,Rd,x	χ,LT	λ adim. LT	L,LT	M,critico	Verifica
100	SLU 132	0.033	1	Si	-19785.8	598018.7	0.93	0.57	200	2075773.7	Si

Verifica a svergolamento SLD §4.2.4.1.3.2 NTC18

X	Comb.	Sfruttamento	Classe	Obblig.	Mx,Ed	Mb,Rd,x	χ,LT	λ adim. LT	L,LT	M,critico	Verifica
100	SLD 14	0.003	1	Si	-1523.6	598018.7	0.93	0.57	200	2075773.7	Si

Verifica a svergolamento con trazione §4.2.4.1.3.2 NTC18 - §5.5.3 ENV 1993-1-1:1994

X	Comb.	Sfruttamento	Classe	Obblig.	NEd	Mx,Ed	Mx,Eff,Ed	Mb,Rd,x	χ,LT	λ adim. LT	L,LT	M,critico	Verifica
100	SLV 9	0.002	1	Si	40.1	-1523.6	-1364.2	598018.7	0.93	0.57	200	2075773.7	Si

Verifica di stabilità a taglio anima Y §4.2.4.1.2.4 [4.2.27] NTC18

η	hw	tw	hw/tw max	Verifica
1.2	13.4	0.6	55.46	Si

Verifica di stabilità a taglio anima Y SLD §4.2.4.1.2.4 [4.2.27] NTC18

η	hw	tw	hw/tw max	Verifica
1.2	13.4	0.6	55.46	Si

Verifiche a deformabilità

Mensola X: No; Mensola Y: No.

Frecce lungo X

Ascissa freccia	Combinazione	Freccia	Luce	L/f	L/f,min	Tipo	Verifica
120	SLE RA 1	0	200	10000	250	Totale	Si
93.3	SLE RA 31	0	200	10000	250	Totale	Si
93.3	SLE RA 30	0	200	10000	250	Totale	Si
93.3	SLE RA 29	0	200	10000	250	Totale	Si
93.3	SLE RA 28	0	200	10000	250	Totale	Si
6.7	SLE RA 2	0	200	10000	350	Variabile	Si
106.7	SLE RA 31	0	200	10000	350	Variabile	Si
106.7	SLE RA 30	0	200	10000	350	Variabile	Si
106.7	SLE RA 29	0	200	10000	350	Variabile	Si
106.7	SLE RA 28	0	200	10000	350	Variabile	Si

Frecce lungo Y

Ascissa freccia	Combinazione	Freccia	Luce	L/f	L/f,min	Tipo	Verifica
100	SLE RA 1	-0.002	200	10000	250	Totale	Si
100	SLE RA 31	-0.018	200	10000	250	Totale	Si
100	SLE RA 30	-0.018	200	10000	250	Totale	Si
100	SLE RA 29	-0.015	200	10000	250	Totale	Si
100	SLE RA 28	-0.015	200	10000	250	Totale	Si
13.3	SLE RA 2	0	200	10000	350	Variabile	Si
100	SLE RA 31	-0.016	200	10000	350	Variabile	Si
100	SLE RA 30	-0.016	200	10000	350	Variabile	Si
100	SLE RA 29	-0.013	200	10000	350	Variabile	Si
100	SLE RA 28	-0.013	200	10000	350	Variabile	Si

Superelemento in acciaio composto dall'asta 217

Caratteristiche del materiale

Acciaio: S275, fyk = 2750

Caratteristiche geometriche

Lunghezza: 200
Nodo iniziale: 40 Nodo finale: 36
Cerniera iniziale: Svincolo: M2, M3 Cerniera finale: Svincolo: M2, M3
Sovraresistenza: 0% Sisma Z: No

Caratteristiche della sezione

Sezione	Rotazione	Area	Jx	Jy	ix	iy	Wx	Wy	Wplx	Wply
HEA160	0	38.82	1674.7	615.62	6.57	3.98	220.36	76.95	245.43	117.67

Verifiche di resistenza

Verifiche a forza assiale §4.2.4.1.2.1 - §4.2.4.1.2.2 NTC18

X	Comb.	Sfruttamento	Classe	NEd	Nc,Rd	Nt,Rd	Riduzione da taglio	ρx	ρy	Verifica
146.7	SLV 7	0.003		329.5		101662.9	1	0	0	Si

Verifiche a forza assiale SLD §4.2.4.1.2.1 - §4.2.4.1.2.2 NTC18

X	Comb.	Sfruttamento	Classe	NEd	Nc,Rd	Nt,Rd	Riduzione da taglio	ρx	ρy	Verifica
200	SLD 8	0.002		227.6		101662.9	1	0	0	Si

Verifica a taglio Y §4.2.4.1.2.4 NTC18

X	Comb.	Sfruttamento	VEd	Vc,Rd	Av	Interazione taglio-torsione	Riduzione torsione	Verifica
0	SLU 132	0.014	275.3	20030.8	13.26	Considerata	1	Si

Verifica a taglio Y SLD §4.2.4.1.2.4 NTC18

X	Comb.	Sfruttamento	VEd	Vc,Rd	Av	Interazione taglio-torsione	Riduzione torsione	Verifica
200	SLD 14	0.002	-30.5	20026.7	13.26	Considerata	1	Si

Verifica a torsione §4.2.4.1.2.5 NTC18

X	Comb.	Sfruttamento torsione	TEd	TRd	Riduzione taglio resistente	Sfruttamento taglio-torsione	τEd,totale	τRd	Verifica
100	SLV 13	0.004	-65.9	14685.6	Considerata				Si

Verifica a torsione SLD §4.2.4.1.2.5 NTC18

X	Comb.	Sfruttamento torsione	TEd	TRd	Riduzione taglio resistente	Sfruttamento taglio-torsione	τEd,totale	τRd	Verifica
100	SLD 14	0.002	-34.6	14685.6	Considerata				Si

Verifica a flessione semplice X §§ 4.2.4.1.2.3 - 4.2.4.1.2.6 - 4.2.4.1.2.7 - 4.2.4.1.2.8 NTC18

X	Comb.	Sfruttamento	Classe	Mx,Ed	Mx,Rd	Rid. Mx,Rd da VEd	ρx	ρy	Verifica
100	SLV 6	0.002	1	-1523.6	642783.4	1	0	0	Si

Verifica a presso/tenso flessione retta X §§ 4.2.4.1.2.3 - 4.2.4.1.2.6 - 4.2.4.1.2.7 - 4.2.4.1.2.8 NTC18

Verifiche eseguite utilizzando la formula conservativa (6.2) §6.2.1 EN 1993-1-1:2005.

X	Comb.	Sfruttamento	Classe	NEd	NRd	Rid. NRd da VEd	Mx,Ed	Mx,Rd	Rid. Mx,Rd da VEd	Rid. Mx,Rd da NEd	ρx	ρy	Verifica
100	SLU 131	0.026	1	304.4	101662.9	1	-14771	642783	1		0	0	Si

Verifica a presso/tenso flessione retta X SLD §§ 4.2.4.1.2.3 - 4.2.4.1.2.6 - 4.2.4.1.2.7 - 4.2.4.1.2.8 NTC18

Verifiche eseguite utilizzando la formula conservativa (6.2) §6.2.1 EN 1993-1-1:2005.

X	Comb.	Sfruttamento	Classe	NEd	NRd	Rid. NRd da VEd	Mx,Ed	Mx,Rd	Rid. Mx,Rd da VEd	Rid. Mx,Rd da NEd	ρx	ρy	Verifica
100	SLD 8	0.005	1	227.6	101662.9	1	-1524	642783	1		0	0	Si

Verifiche ad instabilità

Caratteristiche iniziali

Membratura principale per controllo snellezza; Calcolo di snellezze ed N critici condotti secondo gli assi principali;
Curva X: b; Curva Y: c; Svergolamento: Carico all'estradosso; Curva svergolamento: b;

Dati per instabilità attorno a x

Numero rit.	Presente	Ascissa	Campata	βx/m	Vincolo a entrambi estremi	λx/m	λVer
1	Si	0					
			1-2	1	Si	30.4	Si, (<200)
2	Si	200					

Dati per instabilità attorno a y

Numero rit.	Presente	Ascissa	Campata	βy/n	k,LT	kw,LT	Vincolo a entrambi estremi	λy/n	λVer
1	Si	0							
			1-2	1	1	1	Si	50.2	Si, (<200)
2	Si	200							

Verifica a svergolamento §4.2.4.1.3.2 NTC18

X	Comb.	Sfruttamento	Classe	Obblig.	Mx,Ed	Mb,Rd,x	χ,LT	λ adim. LT	L,LT	M,critico	Verifica
100	SLV 6	0.003	1	Si	-1523.6	598018.7	0.93	0.57	200	2075773.7	Si

Verifica a svergolamento con trazione §4.2.4.1.3.2 NTC18 - §5.5.3 ENV 1993-1-1:1994

X	Comb.	Sfruttamento	Classe	Obblig.	NEd	Mx,Ed	Mx,Eff,Ed	Mb,Rd,x	χ,LT	λ adim. LT	L,LT	M,critico	Verifica
100	SLU 130	0.023	1	Si	304.3	-14770.9	-13561.7	598018.7	0.93	0.57	200	2075773.7	Si

Verifica a svergolamento con trazione SLD §4.2.4.1.3.2 NTC18 - §5.5.3 ENV 1993-1-1:1994

X	Comb.	Sfruttamento	Classe	Obblig.	NEd	Mx,Ed	Mx,Eff,Ed	Mb,Rd,x	χ,LT	λ adim. LT	L,LT	M,critico	Verifica
100	SLD 10	0.002	1	Si	103	-1523.6	-1114.4	598018.7	0.93	0.57	200	2075773.7	Si

Verifica di stabilità a taglio anima Y §4.2.4.1.2.4 [4.2.27] NTC18

η	hw	tw	hw/tw max	Verifica
1.2	13.4	0.6	55.46	Si

Verifica di stabilità a taglio anima Y SLD §4.2.4.1.2.4 [4.2.27] NTC18

η	hw	tw	hw/tw max	Verifica
1.2	13.4	0.6	55.46	Si

Verifiche a deformabilità

Mensola X: No; Mensola Y: No.

Frecce lungo X

Ascissa freccia	Combinazione	Freccia	Luce	L/f	L/f,min	Tipo	Verifica
193.3	SLE RA 1	0	200	10000	250	Totale	Si
186.7	SLE RA 31	0	200	10000	250	Totale	Si
186.7	SLE RA 30	0	200	10000	250	Totale	Si
186.7	SLE RA 29	0	200	10000	250	Totale	Si
186.7	SLE RA 28	0	200	10000	250	Totale	Si

Ascissa freccia	Combinazione	Freccia	Luce	L/f	L/f,min	Tipo	Verifica
46.7	SLE RA 2	0	200	10000	350	Variabile	Si
153.3	SLE RA 31	0	200	10000	350	Variabile	Si
153.3	SLE RA 30	0	200	10000	350	Variabile	Si
153.3	SLE RA 29	0	200	10000	350	Variabile	Si
153.3	SLE RA 28	0	200	10000	350	Variabile	Si

Frecce lungo Y

Ascissa freccia	Combinazione	Freccia	Luce	L/f	L/f,min	Tipo	Verifica
100	SLE RA 1	-0.002	200	10000	250	Totale	Si
100	SLE RA 31	-0.013	200	10000	250	Totale	Si
100	SLE RA 30	-0.013	200	10000	250	Totale	Si
100	SLE RA 29	-0.011	200	10000	250	Totale	Si
100	SLE RA 28	-0.011	200	10000	250	Totale	Si
6.7	SLE RA 2	0	200	10000	350	Variabile	Si
100	SLE RA 31	-0.011	200	10000	350	Variabile	Si
100	SLE RA 30	-0.011	200	10000	350	Variabile	Si
100	SLE RA 29	-0.009	200	10000	350	Variabile	Si
100	SLE RA 28	-0.009	200	10000	350	Variabile	Si

Superelemento in acciaio composto dall'asta 218

Caratteristiche del materiale

Acciaio: S275, fyk = 2750

Caratteristiche geometriche

Lunghezza: 200
Nodo iniziale: 98 Nodo finale: 96
Cerniera iniziale: Svincolo: M2, M3 Cerniera finale: Svincolo: M2, M3
Sovraresistenza: 0% Sisma Z: No

Caratteristiche della sezione

Sezione	Rotazione	Area	Jx	Jy	ix	iy	Wx	Wy	Wplx	Wply
HEA160	0	38.82	1674.7	615.62	6.57	3.98	220.36	76.95	245.43	117.67

Verifiche di resistenza

Verifiche a forza assiale §4.2.4.1.2.1 - §4.2.4.1.2.2 NTC18

X	Comb.	Sfruttamento	Classe	NEd	Nc,Rd	Nt,Rd	Riduzione da taglio	ρx	ρy	Verifica
106.7	SLV 5	0.002	1	-174.5	101662.9		1	0	0	Si

Verifiche a forza assiale SLD §4.2.4.1.2.1 - §4.2.4.1.2.2 NTC18

X	Comb.	Sfruttamento	Classe	NEd	Nc,Rd	Nt,Rd	Riduzione da taglio	ρx	ρy	Verifica
0	SLD 5	0.001	1	-69.3	101662.9		1	0	0	Si

Verifica a taglio Y §4.2.4.1.2.4 NTC18

X	Comb.	Sfruttamento	VEd	Vc,Rd	Av	Interazione taglio-torsione	Riduzione torsione	Verifica
0	SLU 131	0.031	616.8	19957.6	13.26	Considerata	1	Si

Verifica a taglio Y SLD §4.2.4.1.2.4 NTC18

X	Comb.	Sfruttamento	VEd	Vc,Rd	Av	Interazione taglio-torsione	Riduzione torsione	Verifica
200	SLD 14	0.002	-30.5	20011.8	13.26	Considerata	1	Si

Verifica a torsione §4.2.4.1.2.5 NTC18

X	Comb.	Sfruttamento torsione	TEd	TRd	Riduzione taglio resistente	Sfruttamento taglio-torsione	τEd,totale	τRd	Verifica
166.7	SLU 98	0.011	160.9	14685.6	Considerata				Si

Verifica a torsione SLD §4.2.4.1.2.5 NTC18

X	Comb.	Sfruttamento torsione	TEd	TRd	Riduzione taglio resistente	Sfruttamento taglio-torsione	τEd,totale	τRd	Verifica
0	SLD 14	0.004	62	14685.6	Considerata				Si

Verifica a flessione semplice X §§ 4.2.4.1.2.3 - 4.2.4.1.2.6 - 4.2.4.1.2.7 - 4.2.4.1.2.8 NTC18

X	Comb.	Sfruttamento	Classe	Mx,Ed	Mx,Rd	Rid. Mx,Rd da VEd	ρx	ρy	Verifica
100	SLU 97	0.048	1	-30777.2	642783.4	1	0	0	Si

Verifica a flessione semplice X SLD §§ 4.2.4.1.2.3 - 4.2.4.1.2.6 - 4.2.4.1.2.7 - 4.2.4.1.2.8 NTC18

X	Comb.	Sfruttamento	Classe	Mx,Ed	Mx,Rd	Rid. Mx,Rd da VEd	ρx	ρy	Verifica
100	SLD 3	0.002	1	-1523.6	642783.4	1	0	0	Si

Verifica a presso/tenso flessione retta X §§ 4.2.4.1.2.3 - 4.2.4.1.2.6 - 4.2.4.1.2.7 - 4.2.4.1.2.8 NTC18

Verifiche eseguite utilizzando la formula conservativa (6.2) §6.2.1 EN 1993-1-1:2005.

X	Comb.	Sfruttamento	Classe	NEd	NRd	Rid. NRd da VEd	Mx,Ed	Mx,Rd	Rid. Mx,Rd da VEd	Rid. Mx,Rd da NEd	ρx	ρy	Verifica
100	SLV 6	0.004	1	-174.5	101662.9	1	-1524	642783	1		0	0	Si

Verifica a presso/tenso flessione retta X SLD §§ 4.2.4.1.2.3 - 4.2.4.1.2.6 - 4.2.4.1.2.7 - 4.2.4.1.2.8 NTC18

Verifiche eseguite utilizzando la formula conservativa (6.2) §6.2.1 EN 1993-1-1:2005.

X	Comb.	Sfruttamento	Classe	NEd	NRd	Rid. NRd da VEd	Mx,Ed	Mx,Rd	Rid. Mx,Rd da VEd	Rid. Mx,Rd da NEd	ρx	ρy	Verifica
100	SLD 6	0.003	1	-69.3	101662.9	1	-1524	642783	1		0	0	Si

Verifiche ad instabilità

Caratteristiche iniziali

Membratura principale per controllo snellezza; Calcolo di snellezze ed N critici condotti secondo gli assi principali;
Curva X: b; Curva Y: c; Svergolamento: Carico all'estradosso; Curva svergolamento: b;

Dati per instabilità attorno a x

Numero rit.	Presente	Ascissa	Campata	βx/m	Vincolo a entrambi estremi	λx/m	λVer
1	Si	0					
			1-2	1	Si	30.4	Si, (<200)
2	Si	200					

Dati per instabilità attorno a y

Numero rit.	Presente	Ascissa	Campata	βy/n	k,LT	kw,LT	Vincolo a entrambi estremi	λy/n	λVer
1	Si	0							
			1-2	1	1	1	Si	50.2	Si, (<200)
2	Si	200							

Verifica a svergolamento §4.2.4.1.3.2 NTC18

X	Comb.	Sfruttamento	Classe	Obblig.	Mx,Ed	Mb,Rd,x	χ,LT	λ adim. LT	L,LT	M,critico	Verifica
100	SLU 97	0.051	1	Si	-30777.2	598018.7	0.93	0.57	200	2075773.7	Si

Verifica a svergolamento SLD §4.2.4.1.3.2 NTC18

X	Comb.	Sfruttamento	Classe	Obblig.	Mx,Ed	Mb,Rd,x	χ,LT	λ adim. LT	L,LT	M,critico	Verifica
100	SLD 3	0.003	1	Si	-1523.6	598018.7	0.93	0.57	200	2075773.7	Si

Verifica a svergolamento con trazione §4.2.4.1.3.2 NTC18 - §5.5.3 ENV 1993-1-1:1994

X	Comb.	Sfruttamento	Classe	Obblig.	NEd	Mx,Ed	Mx,Eff,Ed	Mb,Rd,x	χ,LT	λ adim. LT	L,LT	M,critico	Verifica
100	SLV 3	0.002	1	Si	45.7	-1523.6	-1342	598018.7	0.93	0.57	200	2075773.7	Si

Verifica a svergolamento con trazione SLD §4.2.4.1.3.2 NTC18 - §5.5.3 ENV 1993-1-1:1994

X	Comb.	Sfruttamento	Classe	Obblig.	NEd	Mx,Ed	Mx,Eff,Ed	Mb,Rd,x	χ,LT	λ adim. LT	L,LT	M,critico	Verifica
100	SLD 8	0.002	1	Si	59.1	-1523.6	-1288.6	598018.7	0.93	0.57	200	2075773.7	Si

Verifica di stabilità per pressoflessione §C.4.2.4.1.3.3.2 NTC18

X	Comb.	Sfruttamento	Classe	NEd	NRk	Mx,Ed max	Mx,Rk	My,Ed max	My,Rk	χ,x	χ,y	kxx	kxy	kyx	kyy	χ,LT	Verifica
200	SLV 6	0.005	1	-174.5	106746.1	1523.6	674922.6	0	323595.1	0.945	0.798	0.95	0.36	1	0.601	0.93	Si

Verifica di stabilità per pressoflessione SLD §C.4.2.4.1.3.3.2 NTC18

X	Comb.	Sfruttamento	Classe	NEd	NRk	Mx,Ed max	Mx,Rk	My,Ed max	My,Rk	χ,x	χ,y	kxx	kxy	kyx	kyy	χ,LT	Verifica
0	SLD 5	0.003	1	-69.3	106746.1	1523.6	674922.6	0	323595.1	0.945	0.798	0.95	0.36	1	0.6	0.93	Si

Verifica di stabilità a taglio anima Y §4.2.4.1.2.4 [4.2.27] NTC18

η	hw	tw	hw/tw max	Verifica
1.2	13.4	0.6	55.46	Si

Verifica di stabilità a taglio anima Y SLD §4.2.4.1.2.4 [4.2.27] NTC18

η	hw	tw	hw/tw max	Verifica
1.2	13.4	0.6	55.46	Si

Verifiche a deformabilità

Mensola X: No; Mensola Y: No.

Frecce lungo X

Ascissa freccia	Combinazione	Freccia	Luce	L/f	L/f,min	Tipo	Verifica
26.7	SLE RA 1	0	200	10000	250	Totale	Si
26.7	SLE RA 31	0	200	10000	250	Totale	Si
173.3	SLE RA 30	0	200	10000	250	Totale	Si
26.7	SLE RA 29	0	200	10000	250	Totale	Si
160	SLE RA 28	0	200	10000	250	Totale	Si
13.3	SLE RA 2	0	200	10000	350	Variabile	Si
13.3	SLE RA 31	0	200	10000	350	Variabile	Si
160	SLE RA 30	0	200	10000	350	Variabile	Si
160	SLE RA 29	0	200	10000	350	Variabile	Si
160	SLE RA 28	0	200	10000	350	Variabile	Si

Frecce lungo Y

Ascissa freccia	Combinazione	Freccia	Luce	L/f	L/f,min	Tipo	Verifica
100	SLE RA 30	-0.027	200	7273.7	250	Totale	Si
100	SLE RA 32	-0.027	200	7273.7	250	Totale	Si
100	SLE RA 33	-0.027	200	7273.7	250	Totale	Si
100	SLE RA 31	-0.027	200	7273.7	250	Totale	Si
100	SLE RA 28	-0.023	200	8863	250	Totale	Si
100	SLE RA 30	-0.025	200	7851	350	Variabile	Si
100	SLE RA 32	-0.025	200	7851	350	Variabile	Si
100	SLE RA 33	-0.025	200	7851	350	Variabile	Si
100	SLE RA 31	-0.025	200	7851	350	Variabile	Si
100	SLE RA 26	-0.021	200	9735.2	350	Variabile	Si

Superelemento in acciaio composto dall'asta 219

Caratteristiche del materiale

Acciaio: S275, fyk = 2750

Caratteristiche geometriche

Lunghezza: 200
Nodo iniziale: 97 Nodo finale: 95
Cerniera iniziale: Svincolo: M2, M3 Cerniera finale: Svincolo: M2, M3
Sovraresistenza: 0% Sisma Z: No

Caratteristiche della sezione

Sezione	Rotazione	Area	Jx	Jy	ix	iy	Wx	Wy	Wplx	Wply
HEA160	0	38.82	1674.7	615.62	6.57	3.98	220.36	76.95	245.43	117.67

Verifiche di resistenza

Verifiche a forza assiale §4.2.4.1.2.1 - §4.2.4.1.2.2 NTC18

X	Comb.	Sfruttamento	Classe	NEd	Nc,Rd	Nt,Rd	Riduzione da taglio	ρx	ρy	Verifica
200	SLV 10	0.002	1	-174.5	101662.9		1	0	0	Si

Verifiche a forza assiale SLD §4.2.4.1.2.1 - §4.2.4.1.2.2 NTC18

X	Comb.	Sfruttamento	Classe	NEd	Nc,Rd	Nt,Rd	Riduzione da taglio	ρx	ρy	Verifica
0	SLD 9	0.001	1	-69.3	101662.9		1	0	0	Si

Verifica a taglio Y §4.2.4.1.2.4 NTC18

X	Comb.	Sfruttamento	VEd	Vc,Rd	Av	Interazione taglio-torsione	Riduzione torsione	Verifica
200	SLU 131	0.031	-618.9	19957.6	13.26	Considerata	1	Si

Verifica a taglio Y SLD §4.2.4.1.2.4 NTC18

X	Comb.	Sfruttamento	VEd	Vc,Rd	Av	Interazione taglio-torsione	Riduzione torsione	Verifica
200	SLD 2	0.002	-30.5	20011.8	13.26	Considerata	1	Si

Verifica a torsione §4.2.4.1.2.5 NTC18

X	Comb.	Sfruttamento torsione	TEd	TRd	Riduzione taglio resistente	Sfruttamento taglio-torsione	τEd,totale	τRd	Verifica
133.3	SLU 98	0.011	-160.9	14685.6	Considerata				Si

Verifica a torsione SLD §4.2.4.1.2.5 NTC18

X	Comb.	Sfruttamento torsione	TEd	TRd	Riduzione taglio resistente	Sfruttamento taglio-torsione	τEd,totale	τRd	Verifica
0	SLD 1	0.004	-62	14685.6	Considerata				Si

Verifica a flessione semplice X §§ 4.2.4.1.2.3 - 4.2.4.1.2.6 - 4.2.4.1.2.7 - 4.2.4.1.2.8 NTC18

X	Comb.	Sfruttamento	Classe	Mx,Ed	Mx,Rd	Rid. Mx,Rd da VEd	ρx	ρy	Verifica
100	SLU 99	0.048	1	-30942.9	642783.4	1	0	0	Si

Verifica a flessione semplice X SLD §§ 4.2.4.1.2.3 - 4.2.4.1.2.6 - 4.2.4.1.2.7 - 4.2.4.1.2.8 NTC18

X	Comb.	Sfruttamento	Classe	Mx,Ed	Mx,Rd	Rid. Mx,Rd da VEd	ρx	ρy	Verifica
100	SLD 13	0.002	1	-1523.6	642783.4	1	0	0	Si

Verifica a presso/tenso flessione retta X §§ 4.2.4.1.2.3 - 4.2.4.1.2.6 - 4.2.4.1.2.7 - 4.2.4.1.2.8 NTC18

Verifiche eseguite utilizzando la formula conservativa (6.2) §6.2.1 EN 1993-1-1:2005.

X	Comb.	Sfruttamento	Classe	NEd	NRd	Rid. NRd da VEd	Mx,Ed	Mx,Rd	Rid. Mx,Rd da VEd	Rid. Mx,Rd da NEd	ρx	ρy	Verifica
100	SLV 9	0.004	1	-174.5	101662.9	1	-1524	642783	1		0	0	Si

Verifica a presso/tenso flessione retta X SLD §§ 4.2.4.1.2.3 - 4.2.4.1.2.6 - 4.2.4.1.2.7 - 4.2.4.1.2.8 NTC18

Verifiche eseguite utilizzando la formula conservativa (6.2) §6.2.1 EN 1993-1-1:2005.

X	Comb.	Sfruttamento	Classe	NEd	NRd	Rid. NRd da VEd	Mx,Ed	Mx,Rd	Rid. Mx,Rd da VEd	Rid. Mx,Rd da NEd	ρx	ρy	Verifica
100	SLD 10	0.003	1	-69.3	101662.9	1	-1524	642783	1		0	0	Si

Verifiche ad instabilità

Caratteristiche iniziali

Membratura principale per controllo snellezza; Calcolo di snellezze ed N critici condotti secondo gli assi principali;
Curva X: b; Curva Y: c; Svergolamento: Carico all'estradosso; Curva svergolamento: b;

Dati per instabilità attorno a x

Numero rit.	Presente	Ascissa	Campata	βx/m	Vincolo a entrambi estremi	λx/m	λVer
1	Si	0					
			1-2	1	Si	30.4	Si, (<200)
2	Si	200					

Dati per instabilità attorno a y

Numero rit.	Presente	Ascissa	Campata	βy/n	k,LT	kw,LT	Vincolo a entrambi estremi	λy/n	λVer
1	Si	0							
			1-2	1	1	1	Si	50.2	Si, (<200)
2	Si	200							

Verifica a svergolamento §4.2.4.1.3.2 NTC18

X	Comb.	Sfruttamento	Classe	Obblig.	Mx,Ed	Mb,Rd,x	χ,LT	λ adim. LT	L,LT	M,critico	Verifica
100	SLU 99	0.052	1	Si	-30942.9	598018.7	0.93	0.57	200	2075773.7	Si

Verifica a svergolamento SLD §4.2.4.1.3.2 NTC18

X	Comb.	Sfruttamento	Classe	Obblig.	Mx,Ed	Mb,Rd,x	χ,LT	λ adim. LT	L,LT	M,critico	Verifica
100	SLD 13	0.003	1	Si	-1523.6	598018.7	0.93	0.57	200	2075773.7	Si

Verifica a svergolamento con trazione §4.2.4.1.3.2 NTC18 - §5.5.3 ENV 1993-1-1:1994

X	Comb.	Sfruttamento	Classe	Obblig.	NEd	Mx,Ed	Mx,Eff,Ed	Mb,Rd,x	χ,LT	λ adim. LT	L,LT	M,critico	Verifica
100	SLV 15	0.002	1	Si	45.7	-1523.6	-1342	598018.7	0.93	0.57	200	2075773.7	Si

Verifica a svergolamento con trazione SLD §4.2.4.1.3.2 NTC18 - §5.5.3 ENV 1993-1-1:1994

X	Comb.	Sfruttamento	Classe	Obblig.	NEd	Mx,Ed	Mx,Eff,Ed	Mb,Rd,x	χ,LT	λ adim. LT	L,LT	M,critico	Verifica
100	SLD 11	0.002	1	Si	59.1	-1523.6	-1288.6	598018.7	0.93	0.57	200	2075773.7	Si

Verifica di stabilità per pressoflessione §C.4.2.4.1.3.3.2 NTC18

X	Comb.	Sfruttamento	Classe	NEd	NRk	Mx,Ed max	Mx,Rk	My,Ed max	My,Rk	χ,x	χ,y	kxx	kxy	kyx	kyy	χ,LT	Verifica
186.7	SLV 10	0.005	1	-174.5	106746.1	1523.6	674922.6	0	323595.1	0.945	0.798	0.95	0.36	1	0.601	0.93	Si

Verifica di stabilità per pressoflessione SLD §C.4.2.4.1.3.3.2 NTC18

X	Comb.	Sfruttamento	Classe	NEd	NRk	Mx,Ed max	Mx,Rk	My,Ed max	My,Rk	χ,x	χ,y	kxx	kxy	kyx	kyy	χ,LT	Verifica
200	SLD 10	0.003	1	-69.3	106746.1	1523.6	674922.6	0	323595.1	0.945	0.798	0.95	0.36	1	0.6	0.93	Si

Verifica di stabilità a taglio anima Y §4.2.4.1.2.4 [4.2.27] NTC18

η	hw	tw	hw/tw max	Verifica
1.2	13.4	0.6	55.46	Si

Verifica di stabilità a taglio anima Y SLD §4.2.4.1.2.4 [4.2.27] NTC18

η	hw	tw	hw/tw max	Verifica
1.2	13.4	0.6	55.46	Si

Verifiche a deformabilità

Mensola X: No; Mensola Y: No.

Frecce lungo X

Ascissa freccia	Combinazione	Freccia	Luce	L/f	L/f,min	Tipo	Verifica
26.7	SLE RA 1	0	200	10000	250	Totale	Si
193.3	SLE RA 31	0	200	10000	250	Totale	Si
193.3	SLE RA 30	0	200	10000	250	Totale	Si
193.3	SLE RA 29	0	200	10000	250	Totale	Si
173.3	SLE RA 28	0	200	10000	250	Totale	Si
13.3	SLE RA 2	0	200	10000	350	Variabile	Si
193.3	SLE RA 31	0	200	10000	350	Variabile	Si
193.3	SLE RA 30	0	200	10000	350	Variabile	Si
193.3	SLE RA 29	0	200	10000	350	Variabile	Si
193.3	SLE RA 28	0	200	10000	350	Variabile	Si

Frecce lungo Y

Ascissa freccia	Combinazione	Freccia	Luce	L/f	L/f,min	Tipo	Verifica
100	SLE RA 30	-0.028	200	7235.2	250	Totale	Si
100	SLE RA 32	-0.028	200	7235.2	250	Totale	Si
100	SLE RA 33	-0.028	200	7235.2	250	Totale	Si
100	SLE RA 31	-0.028	200	7235.2	250	Totale	Si
100	SLE RA 28	-0.023	200	8816.8	250	Totale	Si
100	SLE RA 30	-0.026	200	7806.1	350	Variabile	Si
100	SLE RA 32	-0.026	200	7806.1	350	Variabile	Si
100	SLE RA 33	-0.026	200	7806.1	350	Variabile	Si
100	SLE RA 31	-0.026	200	7806.1	350	Variabile	Si
100	SLE RA 26	-0.021	200	9679.5	350	Variabile	Si

Superelemento in acciaio composto dall'asta 220

Caratteristiche del materiale

Acciaio: S275, fyk = 2750

Caratteristiche geometriche

Lunghezza: 200
Nodo iniziale: 116 Nodo finale: 115
Cerniera iniziale: Svincolo: M2, M3 Cerniera finale: Svincolo: M2, M3
Sovraresistenza: 0% Sisma Z: No

Caratteristiche della sezione

Sezione	Rotazione	Area	Jx	Jy	ix	iy	Wx	Wy	Wplx	Wply
HEA160	0	38.82	1674.7	615.62	6.57	3.98	220.36	76.95	245.43	117.67

Verifiche di resistenza

Verifiche a forza assiale §4.2.4.1.2.1 - §4.2.4.1.2.2 NTC18

X	Comb.	Sfruttamento	Classe	NEd	Nc,Rd	Nt,Rd	Riduzione da taglio	ρx	ρy	Verifica
106.7	SLV 5	0.008		832.6		101662.9	1	0	0	Si

Verifiche a forza assiale SLD §4.2.4.1.2.1 - §4.2.4.1.2.2 NTC18

X	Comb.	Sfruttamento	Classe	NEd	Nc,Rd	Nt,Rd	Riduzione da taglio	ρx	ρy	Verifica
106.7	SLD 5	0.003		316.2		101662.9	1	0	0	Si

Verifica a taglio Y §4.2.4.1.2.4 NTC18

X	Comb.	Sfruttamento	VEd	Vc,Rd	Av	Interazione taglio-torsione	Riduzione torsione	Verifica
0	SLU 132	0.042	833.3	20045.7	13.26	Considerata	1	Si

Verifica a taglio Y SLD §4.2.4.1.2.4 NTC18

X	Comb.	Sfruttamento	VEd	Vc,Rd	Av	Interazione taglio-torsione	Riduzione torsione	Verifica
200	SLD 16	0.002	-30.5	20033.2	13.26	Considerata	1	Si

Verifica a torsione §4.2.4.1.2.5 NTC18

X	Comb.	Sfruttamento torsione	TEd	TRd	Riduzione taglio resistente	Sfruttamento taglio-torsione	τEd,totale	τRd	Verifica
200	SLV 16	0.003	50.7	14685.6	Considerata				Si

Verifica a torsione SLD §4.2.4.1.2.5 NTC18

X	Comb.	Sfruttamento torsione	TEd	TRd	Riduzione taglio resistente	Sfruttamento taglio-torsione	τEd,totale	τRd	Verifica
200	SLD 16	0.002	22.7	14685.6	Considerata				Si

Verifica a flessione semplice X §§ 4.2.4.1.2.3 - 4.2.4.1.2.6 - 4.2.4.1.2.7 - 4.2.4.1.2.8 NTC18

X	Comb.	Sfruttamento	Classe	Mx,Ed	Mx,Rd	Rid. Mx,Rd da VEd	ρx	ρy	Verifica
100	SLU 97	0.065	1	-41662.8	642783.4	1	0	0	Si

Verifica a presso/tenso flessione retta X §§ 4.2.4.1.2.3 - 4.2.4.1.2.6 - 4.2.4.1.2.7 - 4.2.4.1.2.8 NTC18

Verifiche eseguite utilizzando la formula conservativa (6.2) §6.2.1 EN 1993-1-1:2005.

X	Comb.	Sfruttamento	Classe	NEd	NRd	Rid. NRd da VEd	Mx,Ed	Mx,Rd	Rid. Mx,Rd da VEd	Rid. Mx,Rd da NEd	ρx	ρy	Verifica
100	SLV 6	0.011	1	832.6	101662.9	1	-1524	642783	1		0	0	Si

Verifica a presso/tenso flessione retta X SLD §§ 4.2.4.1.2.3 - 4.2.4.1.2.6 - 4.2.4.1.2.7 - 4.2.4.1.2.8 NTC18

Verifiche eseguite utilizzando la formula conservativa (6.2) §6.2.1 EN 1993-1-1:2005.

X	Comb.	Sfruttamento	Classe	NEd	NRd	Rid. NRd da VEd	Mx,Ed	Mx,Rd	Rid. Mx,Rd da VEd	Rid. Mx,Rd da NEd	ρx	ρy	Verifica
100	SLD 6	0.005	1	316.2	101662.9	1	-1524	642783	1		0	0	Si

Verifiche ad instabilità

Caratteristiche iniziali

Membratura principale per controllo snellezza; Calcolo di snellezze ed N critici condotti secondo gli assi principali;
Curva X: b; Curva Y: c; Svergolamento: Carico all'estradosso; Curva svergolamento: b;

Dati per instabilità attorno a x

Numero rit.	Presente	Ascissa	Campata	βx/m	Vincolo a entrambi estremi	λx/m	λVer
1	Si	0					
			1-2	1	Si	30.4	Si, (<200)
2	Si	200					

Dati per instabilità attorno a y

Numero rit.	Presente	Ascissa	Campata	βy/n	k,LT	kw,LT	Vincolo a entrambi estremi	λy/n	λVer
1	Si	0							
			1-2	1	1	1	Si	50.2	Si, (<200)
2	Si	200							

Verifica a svergolamento §4.2.4.1.3.2 NTC18

X	Comb.	Sfruttamento	Classe	Obblig.	Mx,Ed	Mb,Rd,x	χ,LT	λ adim. LT	L,LT	M,critico	Verifica
100	SLU 97	0.07	1	Si	-41662.8	598018.7	0.93	0.57	200	2075773.7	Si

Verifica a svergolamento con trazione §4.2.4.1.3.2 NTC18 - §5.5.3 ENV 1993-1-1:1994

X	Comb.	Sfruttamento	Classe	Obblig.	NEd	Mx,Ed	Mx,Eff,Ed	Mb,Rd,x	χ,LT	λ adim. LT	L,LT	M,critico	Verifica
100	SLV 14	0.001	1	Si	250.4	-1523.6	-528.5	598018.7	0.93	0.57	200	2075773.7	Si

Verifica a svergolamento con trazione SLD §4.2.4.1.3.2 NTC18 - §5.5.3 ENV 1993-1-1:1994

X	Comb.	Sfruttamento	Classe	Obblig.	NEd	Mx,Ed	Mx,Eff,Ed	Mb,Rd,x	χ,LT	λ adim. LT	L,LT	M,critico	Verifica
100	SLD 14	0.002	1	Si	95.5	-1523.6	-1144.1	598018.7	0.93	0.57	200	2075773.7	Si

Verifica di stabilità per pressoflessione §C.4.2.4.1.3.3.2 NTC18

X	Comb.	Sfruttamento	Classe	NEd	NRk	Mx,Ed max	Mx,Rk	My,Ed max	My,Rk	χ,x	χ,y	kxx	kxy	kyx	kyy	χ,LT	Verifica
186.7	SLV 12	0.013	1	-830.8	106746.1	1523.6	674922.6	0	323595.1	0.945	0.798	0.951	0.362	0.999	0.603	0.93	Si

Verifica di stabilità per pressoflessione SLD §C.4.2.4.1.3.3.2 NTC18

X	Comb.	Sfruttamento	Classe	NEd	NRk	Mx,Ed max	Mx,Rk	My,Ed max	My,Rk	χ,x	χ,y	kxx	kxy	kyx	kyy	χ,LT	Verifica
186.7	SLD 12	0.006	1	-314.4	106746.1	1523.6	674922.6	0	323595.1	0.945	0.798	0.95	0.361	1	0.601	0.93	Si

Verifica di stabilità a taglio anima Y §4.2.4.1.2.4 [4.2.27] NTC18

η	hw	tw	hw/tw max	Verifica
1.2	13.4	0.6	55.46	Si

Verifica di stabilità a taglio anima Y SLD §4.2.4.1.2.4 [4.2.27] NTC18

η	hw	tw	hw/tw max	Verifica
1.2	13.4	0.6	55.46	Si

Verifiche a deformabilità

Mensola X: No; Mensola Y: No.

Frecce lungo X

Ascissa freccia	Combinazione	Freccia	Luce	L/f	L/f,min	Tipo	Verifica
100	SLE RA 1	0	200	10000	250	Totale	Si
186.7	SLE RA 31	0	200	10000	250	Totale	Si
186.7	SLE RA 30	0	200	10000	250	Totale	Si
186.7	SLE RA 29	0	200	10000	250	Totale	Si
186.7	SLE RA 28	0	200	10000	250	Totale	Si
193.3	SLE RA 2	0	200	10000	350	Variabile	Si

Ascissa freccia	Combinazione	Freccia	Luce	L/f	L/f,min	Tipo	Verifica
186.7	SLE RA 31	0	200	10000	350	Variabile	Si
186.7	SLE RA 30	0	200	10000	350	Variabile	Si
186.7	SLE RA 29	0	200	10000	350	Variabile	Si
186.7	SLE RA 28	0	200	10000	350	Variabile	Si

Frecce lungo Y

Ascissa freccia	Combinazione	Freccia	Luce	L/f	L/f,min	Tipo	Verifica
100	SLE RA 31	-0.037	200	5387.1	250	Totale	Si
100	SLE RA 33	-0.037	200	5387.1	250	Totale	Si
100	SLE RA 30	-0.037	200	5387.1	250	Totale	Si
100	SLE RA 32	-0.037	200	5387.1	250	Totale	Si
100	SLE RA 27	-0.03	200	6593.8	250	Totale	Si
100	SLE RA 31	-0.035	200	5697.3	350	Variabile	Si
100	SLE RA 33	-0.035	200	5697.3	350	Variabile	Si
100	SLE RA 30	-0.035	200	5697.3	350	Variabile	Si
100	SLE RA 32	-0.035	200	5697.3	350	Variabile	Si
100	SLE RA 27	-0.028	200	7064.7	350	Variabile	Si

Superelemento in acciaio composto dall'asta 221

Caratteristiche del materiale

Acciaio: S275, fyk = 2750

Caratteristiche geometriche

Lunghezza: 200
Nodo iniziale: 74 Nodo finale: 72
Cerniera iniziale: Svincolo: M2, M3 Cerniera finale: Svincolo: M2, M3
Sovraresistenza: 0% Sisma Z: No

Caratteristiche della sezione

Sezione	Rotazione	Area	Jx	Jy	ix	iy	Wx	Wy	Wplx	Wply
HEA160	0	38.82	1674.7	615.62	6.57	3.98	220.36	76.95	245.43	117.67

Verifiche di resistenza

Verifica a taglio Y §4.2.4.1.2.4 NTC18

X	Comb.	Sfruttamento	VEd	Vc,Rd	Av	Interazione taglio-torsione	Riduzione torsione	Verifica
200	SLU 129	0.02	-395.7	20034.4	13.26	Considerata	1	Si

Verifica a taglio Y SLD §4.2.4.1.2.4 NTC18

X	Comb.	Sfruttamento	VEd	Vc,Rd	Av	Interazione taglio-torsione	Riduzione torsione	Verifica
0	SLD 1	0.002	30.5	20045.7	13.26	Considerata	1	Si

Verifica a torsione §4.2.4.1.2.5 NTC18

X	Comb.	Sfruttamento torsione	TEd	TRd	Riduzione taglio resistente	Sfruttamento taglio-torsione	τEd,totale	τRd	Verifica
193.3	SLU 96	0.001	20.6	14685.6	Considerata				Si

Verifica a flessione semplice X §§ 4.2.4.1.2.3 - 4.2.4.1.2.6 - 4.2.4.1.2.7 - 4.2.4.1.2.8 NTC18

X	Comb.	Sfruttamento	Classe	Mx,Ed	Mx,Rd	Rid. Mx,Rd da VEd	ρx	ρy	Verifica
100	SLU 131	0.031	1	-19785.8	642783.4	1	0	0	Si

Verifica a flessione semplice X SLD §§ 4.2.4.1.2.3 - 4.2.4.1.2.6 - 4.2.4.1.2.7 - 4.2.4.1.2.8 NTC18

X	Comb.	Sfruttamento	Classe	Mx,Ed	Mx,Rd	Rid. Mx,Rd da VEd	ρx	ρy	Verifica
100	SLD 3	0.002	1	-1523.6	642783.4	1	0	0	Si

Verifiche ad instabilità

Caratteristiche iniziali

Membratura principale per controllo snellezza; Calcolo di snellezze ed N critici condotti secondo gli assi principali;
Curva X: b; Curva Y: c; Svergolamento: Carico all'estradosso; Curva svergolamento: b;

Dati per instabilità attorno a x

Numero rit.	Presente	Ascissa	Campata	βx/m	Vincolo a entrambi estremi	λx/m	λVer
1	Si	0					
			1-2	1	Si	30.4	Si, (<200)
2	Si	200					

Dati per instabilità attorno a y

Numero rit.	Presente	Ascissa	Campata	βy/n	k,LT	kw,LT	Vincolo a entrambi estremi	λy/n	λVer
1	Si	0							
			1-2	1	1	1	Si	50.2	Si, (<200)
2	Si	200							

Verifica a svergolamento §4.2.4.1.3.2 NTC18

X	Comb.	Sfruttamento	Classe	Obblig.	Mx,Ed	Mb,Rd,x	χ,LT	λ adim. LT	L,LT	M,critico	Verifica
100	SLU 131	0.033	1	Si	-19785.8	598018.7	0.93	0.57	200	2075773.7	Si

Verifica a svergolamento SLD §4.2.4.1.3.2 NTC18

X	Comb.	Sfruttamento	Classe	Obblig.	Mx,Ed	Mb,Rd,x	χ,LT	λ adim. LT	L,LT	M,critico	Verifica
100	SLD 3	0.003	1	Si	-1523.6	598018.7	0.93	0.57	200	2075773.7	Si

Verifica di stabilità a taglio anima Y §4.2.4.1.2.4 [4.2.27] NTC18

η	hw	tw	hw/tw max	Verifica
1.2	13.4	0.6	55.46	Si

Verifica di stabilità a taglio anima Y SLD §4.2.4.1.2.4 [4.2.27] NTC18

η	hw	tw	hw/tw max	Verifica
1.2	13.4	0.6	55.46	Si

Verifiche a deformabilità

Mensola X: No; Mensola Y: No.

Frecce lungo X

Ascissa freccia	Combinazione	Freccia	Luce	L/f	L/f,min	Tipo	Verifica
13.3	SLE RA 1	0	200	10000	250	Totale	Si
166.7	SLE RA 31	0	200	10000	250	Totale	Si
166.7	SLE RA 30	0	200	10000	250	Totale	Si
166.7	SLE RA 29	0	200	10000	250	Totale	Si
166.7	SLE RA 28	0	200	10000	250	Totale	Si
26.7	SLE RA 2	0	200	10000	350	Variabile	Si
173.3	SLE RA 31	0	200	10000	350	Variabile	Si
173.3	SLE RA 30	0	200	10000	350	Variabile	Si
173.3	SLE RA 29	0	200	10000	350	Variabile	Si
173.3	SLE RA 28	0	200	10000	350	Variabile	Si

Frecce lungo Y

Ascissa freccia	Combinazione	Freccia	Luce	L/f	L/f,min	Tipo	Verifica
100	SLE RA 1	-0.002	200	10000	250	Totale	Si
100	SLE RA 31	-0.018	200	10000	250	Totale	Si
100	SLE RA 30	-0.018	200	10000	250	Totale	Si
100	SLE RA 29	-0.015	200	10000	250	Totale	Si
100	SLE RA 28	-0.015	200	10000	250	Totale	Si
153.3	SLE RA 2	0	200	10000	350	Variabile	Si
100	SLE RA 31	-0.016	200	10000	350	Variabile	Si
100	SLE RA 30	-0.016	200	10000	350	Variabile	Si
100	SLE RA 29	-0.013	200	10000	350	Variabile	Si
100	SLE RA 28	-0.013	200	10000	350	Variabile	Si

Superelemento in acciaio composto dall'asta 222

Caratteristiche del materiale

Acciaio: S275, fyk = 2750

Caratteristiche geometriche

Lunghezza: 200
Nodo iniziale: 73 Nodo finale: 71
Cerniera iniziale: Svincolo: M2, M3 Cerniera finale: Svincolo: M2, M3
Sovraresistenza: 0% Sisma Z: No

Caratteristiche della sezione

Sezione	Rotazione	Area	Jx	Jy	ix	iy	Wx	Wy	Wplx	Wply
HEA160	0	38.82	1674.7	615.62	6.57	3.98	220.36	76.95	245.43	117.67

Verifiche di resistenza

Verifica a taglio Y §4.2.4.1.2.4 NTC18

X	Comb.	Sfruttamento	VEd	Vc,Rd	Av	Interazione taglio-torsione	Riduzione torsione	Verifica
200	SLU 129	0.02	-395.7	20034.4	13.26	Considerata	1	Si

Verifica a taglio Y SLD §4.2.4.1.2.4 NTC18

X	Comb.	Sfruttamento	VEd	Vc,Rd	Av	Interazione taglio-torsione	Riduzione torsione	Verifica
200	SLD 2	0.002	-30.5	20045.7	13.26	Considerata	1	Si

Verifica a torsione §4.2.4.1.2.5 NTC18

X	Comb.	Sfruttamento torsione	TEd	TRd	Riduzione taglio resistente	Sfruttamento taglio-torsione	τEd,totale	τRd	Verifica
193.3	SLU 96	0.001	-20.6	14685.6	Considerata				Si

Verifica a flessione semplice X §§ 4.2.4.1.2.3 - 4.2.4.1.2.6 - 4.2.4.1.2.7 - 4.2.4.1.2.8 NTC18

X	Comb.	Sfruttamento	Classe	Mx,Ed	Mx,Rd	Rid. Mx,Rd da VEd	ρx	ρy	Verifica
100	SLU 131	0.031	1	-19785.8	642783.4	1	0	0	Si

Verifica a flessione semplice X SLD §§ 4.2.4.1.2.3 - 4.2.4.1.2.6 - 4.2.4.1.2.7 - 4.2.4.1.2.8 NTC18

X	Comb.	Sfruttamento	Classe	Mx,Ed	Mx,Rd	Rid. Mx,Rd da VEd	ρx	ρy	Verifica
100	SLD 14	0.002	1	-1523.6	642783.4	1	0	0	Si

Verifiche ad instabilità

Caratteristiche iniziali

Membratura principale per controllo snellezza; Calcolo di snellezze ed N critici condotti secondo gli assi principali;
Curva X: b; Curva Y: c; Svergolamento: Carico all'estradosso; Curva svergolamento: b;

Dati per instabilità attorno a x

Numero rit.	Presente	Ascissa	Campata	βx/m	Vincolo a entrambi estremi	λx/m	λVer
1	Si	0					
			1-2	1	Si	30.4	Si, (<200)
2	Si	200					

Dati per instabilità attorno a y

Numero rit.	Presente	Ascissa	Campata	βy/n	k,LT	kw,LT	Vincolo a entrambi estremi	λy/n	λVer
1	Si	0							
			1-2	1	1	1	Si	50.2	Si, (<200)
2	Si	200							

Verifica a svergolamento §4.2.4.1.3.2 NTC18

X	Comb.	Sfruttamento	Classe	Obblig.	Mx,Ed	Mb,Rd,x	χ,LT	λ adim. LT	L,LT	M,critico	Verifica
100	SLU 131	0.033	1	Si	-19785.8	598018.7	0.93	0.57	200	2075773.7	Si

Verifica a svergolamento SLD §4.2.4.1.3.2 NTC18

X	Comb.	Sfruttamento	Classe	Obblig.	Mx,Ed	Mb,Rd,x	χ,LT	λ adim. LT	L,LT	M,critico	Verifica
100	SLD 14	0.003	1	Si	-1523.6	598018.7	0.93	0.57	200	2075773.7	Si

Verifica di stabilità a taglio anima Y §4.2.4.1.2.4 [4.2.27] NTC18

η	hw	tw	hw/tw max	Verifica
1.2	13.4	0.6	55.46	Si

Verifica di stabilità a taglio anima Y SLD §4.2.4.1.2.4 [4.2.27] NTC18

η	hw	tw	hw/tw max	Verifica
1.2	13.4	0.6	55.46	Si

Verifiche a deformabilità

Mensola X: No; Mensola Y: No.

Frecce lungo X

Ascissa freccia	Combinazione	Freccia	Luce	L/f	L/f,min	Tipo	Verifica
13.3	SLE RA 1	0	200	10000	250	Totale	Si
13.3	SLE RA 31	0	200	10000	250	Totale	Si
13.3	SLE RA 30	0	200	10000	250	Totale	Si
13.3	SLE RA 29	0	200	10000	250	Totale	Si
13.3	SLE RA 28	0	200	10000	250	Totale	Si
26.7	SLE RA 2	0	200	10000	350	Variabile	Si
180	SLE RA 31	0	200	10000	350	Variabile	Si
180	SLE RA 30	0	200	10000	350	Variabile	Si
180	SLE RA 29	0	200	10000	350	Variabile	Si
180	SLE RA 28	0	200	10000	350	Variabile	Si

Frecce lungo Y

Ascissa freccia	Combinazione	Freccia	Luce	L/f	L/f,min	Tipo	Verifica
100	SLE RA 1	-0.002	200	10000	250	Totale	Si
100	SLE RA 31	-0.018	200	10000	250	Totale	Si
100	SLE RA 30	-0.018	200	10000	250	Totale	Si
100	SLE RA 29	-0.015	200	10000	250	Totale	Si
100	SLE RA 28	-0.015	200	10000	250	Totale	Si
153.3	SLE RA 2	0	200	10000	350	Variabile	Si
100	SLE RA 31	-0.016	200	10000	350	Variabile	Si
100	SLE RA 30	-0.016	200	10000	350	Variabile	Si
100	SLE RA 29	-0.013	200	10000	350	Variabile	Si
100	SLE RA 28	-0.013	200	10000	350	Variabile	Si

Superelemento in acciaio composto dall'asta 223

Caratteristiche del materiale

Acciaio: S275, fyk = 2750

Caratteristiche geometriche

Lunghezza: 200
Nodo iniziale: 36 Nodo finale: 32
Cerniera iniziale: Svincolo: M2, M3 Cerniera finale: Svincolo: M2, M3
Sovraresistenza: 0% Sisma Z: No

Caratteristiche della sezione

Sezione	Rotazione	Area	Jx	Jy	ix	iy	Wx	Wy	Wplx	Wply
HEA160	0	38.82	1674.7	615.62	6.57	3.98	220.36	76.95	245.43	117.67

Verifiche di resistenza

Verifiche a forza assiale §4.2.4.1.2.1 - §4.2.4.1.2.2 NTC18

X	Comb.	Sfruttamento	Classe	NEd	Nc,Rd	Nt,Rd	Riduzione da taglio	ρx	ρy	Verifica
93.3	SLU 98	0.008		808.4		101662.9	1	0	0	Si

Verifiche a forza assiale SLD §4.2.4.1.2.1 - §4.2.4.1.2.2 NTC18

X	Comb.	Sfruttamento	Classe	NEd	Nc,Rd	Nt,Rd	Riduzione da taglio	ρx	ρy	Verifica
200	SLD 8	0.004		442.2		101662.9	1	0	0	Si

Verifica a taglio Y §4.2.4.1.2.4 NTC18

X	Comb.	Sfruttamento	VEd	Vc,Rd	Av	Interazione taglio-torsione	Riduzione torsione	Verifica
0	SLU 99	0.014	276.3	20045.7	13.26	Considerata	1	Si

Verifica a taglio Y SLD §4.2.4.1.2.4 NTC18

X	Comb.	Sfruttamento	VEd	Vc,Rd	Av	Interazione taglio-torsione	Riduzione torsione	Verifica
200	SLD 16	0.002	-30.5	20045.7	13.26	Considerata	1	Si

Verifica a presso/tenso flessione retta X §§ 4.2.4.1.2.3 - 4.2.4.1.2.6 - 4.2.4.1.2.7 - 4.2.4.1.2.8 NTC18

Verifiche eseguite utilizzando la formula conservativa (6.2) §6.2.1 EN 1993-1-1:2005.

X	Comb.	Sfruttamento	Classe	NEd	NRd	Rid. NRd da VEd	Mx,Ed	Mx,Rd	Rid. Mx,Rd da VEd	Rid. Mx,Rd da NEd	ρx	ρy	Verifica
100	SLU 131	0.031	1	808.4	101662.9	1	-14779	642783	1		0	0	Si

Verifica a presso/tenso flessione retta X SLD §§ 4.2.4.1.2.3 - 4.2.4.1.2.6 - 4.2.4.1.2.7 - 4.2.4.1.2.8 NTC18

Verifiche eseguite utilizzando la formula conservativa (6.2) §6.2.1 EN 1993-1-1:2005.

X	Comb.	Sfruttamento	Classe	NEd	NRd	Rid. NRd da VEd	Mx,Ed	Mx,Rd	Rid. Mx,Rd da VEd	Rid. Mx,Rd da NEd	ρx	ρy	Verifica
100	SLD 8	0.007	1	442.2	101662.9	1	-1524	642783	1		0	0	Si

Verifiche ad instabilità

Caratteristiche iniziali

Membratura principale per controllo snellezza; Calcolo di snellezze ed N critici condotti secondo gli assi principali;
Curva X: b; Curva Y: c; Svergolamento: Carico all'estradosso; Curva svergolamento: b;

Dati per instabilità attorno a x

Numero rit.	Presente	Ascissa	Campata	βx/m	Vincolo a entrambi estremi	λx/m	λVer
1	Si	0					
			1-2	1	Si	30.4	Si, (<200)
2	Si	200					

Dati per instabilità attorno a y

Numero rit.	Presente	Ascissa	Campata	βy/n	k,LT	kw,LT	Vincolo a entrambi estremi	λy/n	λVer
1	Si	0							
			1-2	1	1	1	Si	50.2	Si, (<200)
2	Si	200							

Verifica a svergolamento con trazione §4.2.4.1.3.2 NTC18 - §5.5.3 ENV 1993-1-1:1994

X	Comb.	Sfruttamento	Classe	Obblig.	NEd	Mx,Ed	Mx,Eff,Ed	Mb,Rd,x	χ,LT	λ adim. LT	L,LT	M,critico	Verifica
100	SLU 64	0.019	1	Si	677	-14321.7	-11631.3	598018.7	0.93	0.57	200	2075773.7	Si

Verifica di stabilità a taglio anima Y §4.2.4.1.2.4 [4.2.27] NTC18

η	hw	tw	hw/tw max	Verifica
1.2	13.4	0.6	55.46	Si

Verifica di stabilità a taglio anima Y SLD §4.2.4.1.2.4 [4.2.27] NTC18

η	hw	tw	hw/tw max	Verifica
1.2	13.4	0.6	55.46	Si

Verifiche a deformabilità

Mensola X: No; Mensola Y: No.

Frecce lungo X

Ascissa freccia	Combinazione	Freccia	Luce	L/f	L/f,min	Tipo	Verifica
53.3	SLE RA 1	0	200	10000	250	Totale	Si
173.3	SLE RA 31	0	200	10000	250	Totale	Si
173.3	SLE RA 30	0	200	10000	250	Totale	Si
173.3	SLE RA 29	0	200	10000	250	Totale	Si
173.3	SLE RA 28	0	200	10000	250	Totale	Si
33.3	SLE RA 2	0	200	10000	350	Variabile	Si
173.3	SLE RA 31	0	200	10000	350	Variabile	Si
173.3	SLE RA 30	0	200	10000	350	Variabile	Si
173.3	SLE RA 29	0	200	10000	350	Variabile	Si
173.3	SLE RA 28	0	200	10000	350	Variabile	Si

Frecce lungo Y

Ascissa freccia	Combinazione	Freccia	Luce	L/f	L/f,min	Tipo	Verifica
100	SLE RA 1	-0.002	200	10000	250	Totale	Si
100	SLE RA 31	-0.013	200	10000	250	Totale	Si
100	SLE RA 30	-0.013	200	10000	250	Totale	Si
100	SLE RA 29	-0.011	200	10000	250	Totale	Si
100	SLE RA 28	-0.011	200	10000	250	Totale	Si
46.7	SLE RA 2	0	200	10000	350	Variabile	Si
100	SLE RA 31	-0.011	200	10000	350	Variabile	Si
100	SLE RA 30	-0.011	200	10000	350	Variabile	Si

Ascissa freccia	Combinazione	Freccia	Luce	L/f	L/f,min	Tipo	Verifica
100	SLE RA 29	-0.009	200	10000	350	Variabile	Si
100	SLE RA 28	-0.009	200	10000	350	Variabile	Si

Superelemento in acciaio composto dall'asta 224

Caratteristiche del materiale

Acciaio: S275, fyk = 2750

Caratteristiche geometriche

Lunghezza: 200
Nodo iniziale: 96 Nodo finale: 94
Cerniera iniziale: Svincolo: M2, M3 Cerniera finale: Svincolo: M2, M3
Sovraresistenza: 0% Sisma Z: No

Caratteristiche della sezione

Sezione	Rotazione	Area	Jx	Jy	ix	iy	Wx	Wy	Wplx	Wply
HEA160	0	38.82	1674.7	615.62	6.57	3.98	220.36	76.95	245.43	117.67

Verifiche di resistenza

Verifiche a forza assiale §4.2.4.1.2.1 - §4.2.4.1.2.2 NTC18

X	Comb.	Sfruttamento	Classe	NEd	Nc,Rd	Nt,Rd	Riduzione da taglio	ρx	ρy	Verifica
0	SLV 5	0.001	1	-116.9	101662.9		1	0	0	Si

Verifiche a forza assiale SLD §4.2.4.1.2.1 - §4.2.4.1.2.2 NTC18

X	Comb.	Sfruttamento	Classe	NEd	Nc,Rd	Nt,Rd	Riduzione da taglio	ρx	ρy	Verifica
0	SLD 5	0	1	-47.3	101662.9		1	0	0	Si

Verifica a taglio Y §4.2.4.1.2.4 NTC18

X	Comb.	Sfruttamento	VEd	Vc,Rd	Av	Interazione taglio-torsione	Riduzione torsione	Verifica
0	SLU 129	0.168	3366.1	20009.5	13.26	Considerata	1	Si

Verifica a taglio Y SLD §4.2.4.1.2.4 NTC18

X	Comb.	Sfruttamento	VEd	Vc,Rd	Av	Interazione taglio-torsione	Riduzione torsione	Verifica
200	SLD 16	0.002	-30.5	20045.7	13.26	Considerata	1	Si

Verifica a torsione §4.2.4.1.2.5 NTC18

X	Comb.	Sfruttamento torsione	TEd	TRd	Riduzione taglio resistente	Sfruttamento taglio-torsione	τEd,totale	τRd	Verifica
93.3	SLU 96	0.005	66.1	14685.6	Considerata				Si

Verifica a flessione semplice X §§ 4.2.4.1.2.3 - 4.2.4.1.2.6 - 4.2.4.1.2.7 - 4.2.4.1.2.8 NTC18

X	Comb.	Sfruttamento	Classe	Mx,Ed	Mx,Rd	Rid. Mx,Rd da VEd	ρx	ρy	Verifica
100	SLU 99	0.262	1	-168245.4	642783.4	1	0	0	Si

Verifica a flessione semplice X SLD §§ 4.2.4.1.2.3 - 4.2.4.1.2.6 - 4.2.4.1.2.7 - 4.2.4.1.2.8 NTC18

X	Comb.	Sfruttamento	Classe	Mx,Ed	Mx,Rd	Rid. Mx,Rd da VEd	ρx	ρy	Verifica
100	SLD 2	0.002	1	-1523.6	642783.4	1	0	0	Si

Verifica a presso/tenso flessione retta X §§ 4.2.4.1.2.3 - 4.2.4.1.2.6 - 4.2.4.1.2.7 - 4.2.4.1.2.8 NTC18

Verifiche eseguite utilizzando la formula conservativa (6.2) §6.2.1 EN 1993-1-1:2005.

X	Comb.	Sfruttamento	Classe	NEd	NRd	Rid. NRd da VEd	Mx,Ed	Mx,Rd	Rid. Mx,Rd da VEd	Rid. Mx,Rd da NEd	ρx	ρy	Verifica
100	SLV 6	0.004	1	-116.9	101662.9	1	-1524	642783	1		0	0	Si

Verifica a presso/tenso flessione retta X SLD §§ 4.2.4.1.2.3 - 4.2.4.1.2.6 - 4.2.4.1.2.7 - 4.2.4.1.2.8 NTC18

Verifiche eseguite utilizzando la formula conservativa (6.2) §6.2.1 EN 1993-1-1:2005.

X	Comb.	Sfruttamento	Classe	NEd	NRd	Rid. NRd da VEd	Mx,Ed	Mx,Rd	Rid. Mx,Rd da VEd	Rid. Mx,Rd da NEd	ρx	ρy	Verifica
100	SLD 6	0.003	1	-47.3	101662.9	1	-1524	642783	1		0	0	Si

Verifiche ad instabilità

Caratteristiche iniziali

Membratura principale per controllo snellezza; Calcolo di snellezze ed N critici condotti secondo gli assi principali;
Curva X: b; Curva Y: c; Svergolamento: Carico all'estradosso; Curva svergolamento: b;

Dati per instabilità attorno a x

Numero rit.	Presente	Ascissa	Campata	βx/m	Vincolo a entrambi estremi	λx/m	λVer
1	Si	0					
			1-2	1	Si	30.4	Si, (<200)
2	Si	200					

Dati per instabilità attorno a y

Numero rit.	Presente	Ascissa	Campata	βy/n	k,LT	kw,LT	Vincolo a entrambi estremi	λy/n	λVer
1	Si	0							
			1-2	1	1	1	Si	50.2	Si, (<200)
2	Si	200							

Verifica a svergolamento §4.2.4.1.3.2 NTC18

X	Comb.	Sfruttamento	Classe	Obblig.	Mx,Ed	Mb,Rd,x	χ,LT	λ adim. LT	L,LT	M,critico	Verifica
100	SLU 99	0.281	1	Si	-168245.4	598018.7	0.93	0.57	200	2075773.7	Si

Verifica a svergolamento SLD §4.2.4.1.3.2 NTC18

X	Comb.	Sfruttamento	Classe	Obblig.	Mx,Ed	Mb,Rd,x	χ,LT	λ adim. LT	L,LT	M,critico	Verifica
100	SLD 2	0.003	1	Si	-1523.6	598018.7	0.93	0.57	200	2075773.7	Si

Verifica a svergolamento con trazione §4.2.4.1.3.2 NTC18 - §5.5.3 ENV 1993-1-1:1994

X	Comb.	Sfruttamento	Classe	Obblig.	NEd	Mx,Ed	Mx,Eff,Ed	Mb,Rd,x	χ,LT	λ adim. LT	L,LT	M,critico	Verifica
100	SLV 8	0.002	1	Si	107.3	-1523.6	-1097.2	598018.7	0.93	0.57	200	2075773.7	Si

Verifica di stabilità per pressoflessione §C.4.2.4.1.3.3.2 NTC18

X	Comb.	Sfruttamento	Classe	NEd	NRk	Mx,Ed max	Mx,Rk	My,Ed max	My,Rk	χ,x	χ,y	kxx	kxy	kyx	kyy	χ,LT	Verifica
0	SLV 5	0.004	1	-116.9	106746.1	1523.6	674922.6	0	323595.1	0.945	0.798	0.95	0.36	1	0.6	0.93	Si

Verifica di stabilità per pressoflessione SLD §C.4.2.4.1.3.3.2 NTC18

X	Comb.	Sfruttamento	Classe	NEd	NRk	Mx,Ed max	Mx,Rk	My,Ed max	My,Rk	χ,x	χ,y	kxx	kxy	kyx	kyy	χ,LT	Verifica
0	SLD 5	0.003	1	-47.3	106746.1	1523.6	674922.6	0	323595.1	0.945	0.798	0.95	0.36	1	0.6	0.93	Si

Verifica di stabilità a taglio anima Y §4.2.4.1.2.4 [4.2.27] NTC18

η	hw	tw	hw/tw max	Verifica
1.2	13.4	0.6	55.46	Si

Verifica di stabilità a taglio anima Y SLD §4.2.4.1.2.4 [4.2.27] NTC18

η	hw	tw	hw/tw max	Verifica
1.2	13.4	0.6	55.46	Si

Verifiche a deformabilità

Mensola X: No; Mensola Y: No.

Frecce lungo X

Ascissa freccia	Combinazione	Freccia	Luce	L/f	L/f,min	Tipo	Verifica
193.3	SLE RA 1	0	200	10000	250	Totale	Si
186.7	SLE RA 31	0	200	10000	250	Totale	Si
186.7	SLE RA 30	0	200	10000	250	Totale	Si
186.7	SLE RA 29	0	200	10000	250	Totale	Si
186.7	SLE RA 28	0	200	10000	250	Totale	Si
40	SLE RA 2	0	200	10000	350	Variabile	Si
140	SLE RA 31	0	200	10000	350	Variabile	Si
140	SLE RA 30	0	200	10000	350	Variabile	Si
140	SLE RA 29	0	200	10000	350	Variabile	Si
140	SLE RA 28	0	200	10000	350	Variabile	Si

Frecce lungo Y

Ascissa freccia	Combinazione	Freccia	Luce	L/f	L/f,min	Tipo	Verifica
100	SLE RA 30	-0.149	200	1341.3	250	Totale	Si
100	SLE RA 32	-0.149	200	1341.3	250	Totale	Si
100	SLE RA 33	-0.149	200	1341.3	250	Totale	Si
100	SLE RA 31	-0.149	200	1341.3	250	Totale	Si
100	SLE RA 26	-0.141	200	1420.7	250	Totale	Si
100	SLE RA 30	-0.147	200	1359.8	350	Variabile	Si
100	SLE RA 32	-0.147	200	1359.8	350	Variabile	Si
100	SLE RA 33	-0.147	200	1359.8	350	Variabile	Si
100	SLE RA 31	-0.147	200	1359.8	350	Variabile	Si
100	SLE RA 26	-0.139	200	1441.4	350	Variabile	Si

Superelemento in acciaio composto dall'asta 225

Caratteristiche del materiale

Acciaio: S275, fyk = 2750

Caratteristiche geometriche

Lunghezza: 200
Nodo iniziale: 95 Nodo finale: 93
Cerniera iniziale: Svincolo: M2, M3 Cerniera finale: Svincolo: M2, M3
Sovraresistenza: 0% Sisma Z: No

Caratteristiche della sezione

Sezione	Rotazione	Area	Jx	Jy	ix	iy	Wx	Wy	Wplx	Wply
HEA160	0	38.82	1674.7	615.62	6.57	3.98	220.36	76.95	245.43	117.67

Verifiche di resistenza

Verifiche a forza assiale §4.2.4.1.2.1 - §4.2.4.1.2.2 NTC18

X	Comb.	Sfruttamento	Classe	NEd	Nc,Rd	Nt,Rd	Riduzione da taglio	ρx	ρy	Verifica
0	SLV 9	0.001	1	-116.9	101662.9		1	0	0	Si

Verifiche a forza assiale SLD §4.2.4.1.2.1 - §4.2.4.1.2.2 NTC18

X	Comb.	Sfruttamento	Classe	NEd	Nc,Rd	Nt,Rd	Riduzione da taglio	ρx	ρy	Verifica
200	SLD 10	0	1	-47.3	101662.9		1	0	0	Si

Verifica a taglio Y §4.2.4.1.2.4 NTC18

X	Comb.	Sfruttamento	VEd	Vc,Rd	Av	Interazione taglio-torsione	Riduzione torsione	Verifica
0	SLU 129	0.168	3368.4	20009.5	13.26	Considerata	1	Si

Verifica a taglio Y SLD §4.2.4.1.2.4 NTC18

X	Comb.	Sfruttamento	VEd	Vc,Rd	Av	Interazione taglio-torsione	Riduzione torsione	Verifica
200	SLD 2	0.002	-30.5	20045.7	13.26	Considerata	1	Si

Verifica a torsione §4.2.4.1.2.5 NTC18

X	Comb.	Sfruttamento torsione	TEd	TRd	Riduzione taglio resistente	Sfruttamento taglio-torsione	τEd,totale	τRd	Verifica
93.3	SLU 96	0.005	-66.1	14685.6	Considerata				Si

Verifica a flessione semplice X §§ 4.2.4.1.2.3 - 4.2.4.1.2.6 - 4.2.4.1.2.7 - 4.2.4.1.2.8 NTC18

X	Comb.	Sfruttamento	Classe	Mx,Ed	Mx,Rd	Rid. Mx,Rd da VEd	ρx	ρy	Verifica
100	SLU 131	0.262	1	-168422.3	642783.4	1	0	0	Si

Verifica a flessione semplice X SLD §§ 4.2.4.1.2.3 - 4.2.4.1.2.6 - 4.2.4.1.2.7 - 4.2.4.1.2.8 NTC18

X	Comb.	Sfruttamento	Classe	Mx,Ed	Mx,Rd	Rid. Mx,Rd da VEd	ρx	ρy	Verifica
100	SLD 14	0.002	1	-1523.6	642783.4	1	0	0	Si

Verifica a presso/tenso flessione retta X §§ 4.2.4.1.2.3 - 4.2.4.1.2.6 - 4.2.4.1.2.7 - 4.2.4.1.2.8 NTC18

Verifiche eseguite utilizzando la formula conservativa (6.2) §6.2.1 EN 1993-1-1:2005.

X	Comb.	Sfruttamento	Classe	NEd	NRd	Rid. NRd da VEd	Mx,Ed	Mx,Rd	Rid. Mx,Rd da VEd	Rid. Mx,Rd da NEd	ρx	ρy	Verifica
100	SLV 10	0.004	1	-116.9	101662.9	1	-1524	642783	1		0	0	Si

Verifica a presso/tenso flessione retta X SLD §§ 4.2.4.1.2.3 - 4.2.4.1.2.6 - 4.2.4.1.2.7 - 4.2.4.1.2.8 NTC18

Verifiche eseguite utilizzando la formula conservativa (6.2) §6.2.1 EN 1993-1-1:2005.

X	Comb.	Sfruttamento	Classe	NEd	NRd	Rid. NRd da VEd	Mx,Ed	Mx,Rd	Rid. Mx,Rd da VEd	Rid. Mx,Rd da NEd	ρx	ρy	Verifica
100	SLD 9	0.003	1	-47.3	101662.9	1	-1524	642783	1		0	0	Si

Verifiche ad instabilità

Caratteristiche iniziali

Membratura principale per controllo snellezza; Calcolo di snellezze ed N critici condotti secondo gli assi principali;
Curva X: b; Curva Y: c; Svergolamento: Carico all'estradosso; Curva svergolamento: b;

Dati per instabilità attorno a x

Numero rit.	Presente	Ascissa	Campata	βx/m	Vincolo a entrambi estremi	λx/m	λVer
1	Si	0					
			1-2	1	Si	30.4	Si, (<200)
2	Si	200					

Dati per instabilità attorno a y

Numero rit.	Presente	Ascissa	Campata	βy/n	k,LT	kw,LT	Vincolo a entrambi estremi	λy/n	λVer
1	Si	0							
			1-2	1	1	1	Si	50.2	Si, (<200)
2	Si	200							

Verifica a svergolamento §4.2.4.1.3.2 NTC18

X	Comb.	Sfruttamento	Classe	Obblig.	Mx,Ed	Mb,Rd,x	χ,LT	λ adim. LT	L,LT	M,critico	Verifica
100	SLU 131	0.282	1	Si	-168422.3	598018.7	0.93	0.57	200	2075773.7	Si

Verifica a svergolamento SLD §4.2.4.1.3.2 NTC18

X	Comb.	Sfruttamento	Classe	Obblig.	Mx,Ed	Mb,Rd,x	χ,LT	λ adim. LT	L,LT	M,critico	Verifica
100	SLD 14	0.003	1	Si	-1523.6	598018.7	0.93	0.57	200	2075773.7	Si

Verifica a svergolamento con trazione §4.2.4.1.3.2 NTC18 - §5.5.3 ENV 1993-1-1:1994

X	Comb.	Sfruttamento	Classe	Obblig.	NEd	Mx,Ed	Mx,Eff,Ed	Mb,Rd,x	χ,LT	λ adim. LT	L,LT	M,critico	Verifica
100	SLV 11	0.002	1	Si	107.3	-1523.6	-1097.2	598018.7	0.93	0.57	200	2075773.7	Si

Verifica di stabilità per pressoflessione §C.4.2.4.1.3.3.2 NTC18

X	Comb.	Sfruttamento	Classe	NEd	NRk	Mx,Ed max	Mx,Rk	My,Ed max	My,Rk	χ,x	χ,y	kxx	kxy	kyx	kyy	χ,LT	Verifica
200	SLV 10	0.004	1	-116.9	106746.1	1523.6	674922.6	0	323595.1	0.945	0.798	0.95	0.36	1	0.6	0.93	Si

Verifica di stabilità per pressoflessione SLD §C.4.2.4.1.3.3.2 NTC18

X	Comb.	Sfruttamento	Classe	NEd	NRk	Mx,Ed max	Mx,Rk	My,Ed max	My,Rk	χ,x	χ,y	kxx	kxy	kyx	kyy	χ,LT	Verifica
200	SLD 10	0.003	1	-47.3	106746.1	1523.6	674922.6	0	323595.1	0.945	0.798	0.95	0.36	1	0.6	0.93	Si

Verifica di stabilità a taglio anima Y §4.2.4.1.2.4 [4.2.27] NTC18

η	hw	tw	hw/tw max	Verifica
1.2	13.4	0.6	55.46	Si

Verifica di stabilità a taglio anima Y SLD §4.2.4.1.2.4 [4.2.27] NTC18

η	hw	tw	hw/tw max	Verifica
1.2	13.4	0.6	55.46	Si

Verifiche a deformabilità

Mensola X: No; Mensola Y: No.

Frecce lungo X

Ascissa freccia	Combinazione	Freccia	Luce	L/f	L/f,min	Tipo	Verifica
193.3	SLE RA 1	0	200	10000	250	Totale	Si
186.7	SLE RA 31	0	200	10000	250	Totale	Si

Ascissa freccia	Combinazione	Freccia	Luce	L/f	L/f,min	Tipo	Verifica
186.7	SLE RA 30	0	200	10000	250	Totale	Si
186.7	SLE RA 29	0	200	10000	250	Totale	Si
186.7	SLE RA 28	0	200	10000	250	Totale	Si
40	SLE RA 2	0	200	10000	350	Variabile	Si
186.7	SLE RA 31	0	200	10000	350	Variabile	Si
186.7	SLE RA 30	0	200	10000	350	Variabile	Si
186.7	SLE RA 29	0	200	10000	350	Variabile	Si
186.7	SLE RA 28	0	200	10000	350	Variabile	Si

Frecce lungo Y

Ascissa freccia	Combinazione	Freccia	Luce	L/f	L/f,min	Tipo	Verifica
100	SLE RA 30	-0.149	200	1339.9	250	Totale	Si
100	SLE RA 32	-0.149	200	1339.9	250	Totale	Si
100	SLE RA 33	-0.149	200	1339.9	250	Totale	Si
100	SLE RA 31	-0.149	200	1339.9	250	Totale	Si
100	SLE RA 26	-0.141	200	1419.4	250	Totale	Si
100	SLE RA 30	-0.147	200	1358.3	350	Variabile	Si
100	SLE RA 32	-0.147	200	1358.3	350	Variabile	Si
100	SLE RA 33	-0.147	200	1358.3	350	Variabile	Si
100	SLE RA 31	-0.147	200	1358.3	350	Variabile	Si
100	SLE RA 26	-0.139	200	1440	350	Variabile	Si

Superelemento in acciaio composto dall'asta 226

Caratteristiche del materiale

Acciaio: S275, fyk = 2750

Caratteristiche geometriche

Lunghezza: 200
Nodo iniziale: 115 Nodo finale: 114
Cerniera iniziale: Svincolo: M2, M3 Cerniera finale: Svincolo: M2, M3
Sovraresistenza: 0% Sisma Z: No

Caratteristiche della sezione

Sezione	Rotazione	Area	Jx	Jy	ix	iy	Wx	Wy	Wplx	Wply
HEA160	0	38.82	1674.7	615.62	6.57	3.98	220.36	76.95	245.43	117.67

Verifiche di resistenza

Verifiche a forza assiale §4.2.4.1.2.1 - §4.2.4.1.2.2 NTC18

X	Comb.	Sfruttamento	Classe	NEd	Nc,Rd	Nt,Rd	Riduzione da taglio	ρx	ρy	Verifica
106.7	SLV 5	0.005		554		101662.9	1	0	0	Si

Verifiche a forza assiale SLD §4.2.4.1.2.1 - §4.2.4.1.2.2 NTC18

X	Comb.	Sfruttamento	Classe	NEd	Nc,Rd	Nt,Rd	Riduzione da taglio	ρx	ρy	Verifica
106.7	SLD 5	0.002		210.6		101662.9	1	0	0	Si

Verifica a taglio Y §4.2.4.1.2.4 NTC18

X	Comb.	Sfruttamento	VEd	Vc,Rd	Av	Interazione taglio-torsione	Riduzione torsione	Verifica
0	SLU 129	0.316	6332.4	20045.7	13.26	Considerata	1	Si

Verifica a taglio Y SLD §4.2.4.1.2.4 NTC18

X	Comb.	Sfruttamento	VEd	Vc,Rd	Av	Interazione taglio-torsione	Riduzione torsione	Verifica
0	SLD 1	0.002	30.5	20045.7	13.26	Considerata	1	Si

Verifica a flessione semplice X §§ 4.2.4.1.2.3 - 4.2.4.1.2.6 - 4.2.4.1.2.7 - 4.2.4.1.2.8 NTC18

X	Comb.	Sfruttamento	Classe	Mx,Ed	Mx,Rd	Rid. Mx,Rd da VEd	ρx	ρy	Verifica
100	SLU 132	0.493	1	-316621.6	642783.4	1	0	0	Si

Verifica a presso/tenso flessione retta X §§ 4.2.4.1.2.3 - 4.2.4.1.2.6 - 4.2.4.1.2.7 - 4.2.4.1.2.8 NTC18

Verifiche eseguite utilizzando la formula conservativa (6.2) §6.2.1 EN 1993-1-1:2005.

X	Comb.	Sfruttamento	Classe	NEd	NRd	Rid. NRd da VEd	Mx,Ed	Mx,Rd	Rid. Mx,Rd da VEd	Rid. Mx,Rd da NEd	ρx	ρy	Verifica
100	SLV 6	0.008	1	554	101662.9	1	-1524	642783	1		0	0	Si

Verifica a presso/tenso flessione retta X SLD §§ 4.2.4.1.2.3 - 4.2.4.1.2.6 - 4.2.4.1.2.7 - 4.2.4.1.2.8 NTC18

Verifiche eseguite utilizzando la formula conservativa (6.2) §6.2.1 EN 1993-1-1:2005.

X	Comb.	Sfruttamento	Classe	NEd	NRd	Rid. NRd da VEd	Mx,Ed	Mx,Rd	Rid. Mx,Rd da VEd	Rid. Mx,Rd da NEd	ρx	ρy	Verifica
100	SLD 5	0.004	1	210.6	101662.9	1	-1524	642783	1		0	0	Si

Verifiche ad instabilità

Caratteristiche iniziali

Membratura principale per controllo snellezza; Calcolo di snellezze ed N critici condotti secondo gli assi principali;
Curva X: b; Curva Y: c; Svergolamento: Carico all'estradosso; Curva svergolamento: b;

Dati per instabilità attorno a x

Numero rit.	Presente	Ascissa	Campata	βx/m	Vincolo a entrambi estremi	λx/m	λVer
1	Si	0					

Numero rit.	Presente	Ascissa	Campata	βx/m	Vincolo a entrambi estremi	λx/m	λVer
			1-2	1	Si	30.4	Si, (<200)
2	Si	200					

Dati per instabilità attorno a y

Numero rit.	Presente	Ascissa	Campata	βy/n	k,LT	kw,LT	Vincolo a entrambi estremi	λy/n	λVer
1	Si	0							
			1-2	1	1	1	Si	50.2	Si, (<200)
2	Si	200							

Verifica a svergolamento §4.2.4.1.3.2 NTC18

X	Comb.	Sfruttamento	Classe	Obblig.	Mx,Ed	Mb,Rd,x	χ,LT	λ adim. LT	L,LT	M,critico	Verifica
100	SLU 132	0.529	1	Si	-316621.6	598018.7	0.93	0.57	200	2075773.7	Si

Verifica a svergolamento con trazione §4.2.4.1.3.2 NTC18 - §5.5.3 ENV 1993-1-1:1994

X	Comb.	Sfruttamento	Classe	Obblig.	NEd	Mx,Ed	Mx,Eff,Ed	Mb,Rd,x	χ,LT	λ adim. LT	L,LT	M,critico	Verifica
100	SLV 13	0.001	1	Si	166.8	-1523.6	-860.6	598018.7	0.93	0.57	200	2075773.7	Si

Verifica a svergolamento con trazione SLD §4.2.4.1.3.2 NTC18 - §5.5.3 ENV 1993-1-1:1994

X	Comb.	Sfruttamento	Classe	Obblig.	NEd	Mx,Ed	Mx,Eff,Ed	Mb,Rd,x	χ,LT	λ adim. LT	L,LT	M,critico	Verifica
100	SLD 14	0.002	1	Si	63.8	-1523.6	-1270.1	598018.7	0.93	0.57	200	2075773.7	Si

Verifica di stabilità per pressoflessione §C.4.2.4.1.3.3.2 NTC18

X	Comb.	Sfruttamento	Classe	NEd	NRk	Mx,Ed max	Mx,Rk	My,Ed max	My,Rk	χ,x	χ,y	kxx	kxy	kyx	kyy	χ,LT	Verifica
186.7	SLV 12	0.009	1	-552.3	106746.1	1523.6	674922.6	0	323595.1	0.945	0.798	0.951	0.361	0.999	0.602	0.93	Si

Verifica di stabilità per pressoflessione SLD §C.4.2.4.1.3.3.2 NTC18

X	Comb.	Sfruttamento	Classe	NEd	NRk	Mx,Ed max	Mx,Rk	My,Ed max	My,Rk	χ,x	χ,y	kxx	kxy	kyx	kyy	χ,LT	Verifica
186.7	SLD 12	0.005	1	-208.9	106746.1	1523.6	674922.6	0	323595.1	0.945	0.798	0.95	0.361	1	0.601	0.93	Si

Verifica di stabilità a taglio anima Y §4.2.4.1.2.4 [4.2.27] NTC18

η	hw	tw	hw/tw max	Verifica
1.2	13.4	0.6	55.46	Si

Verifica di stabilità a taglio anima Y SLD §4.2.4.1.2.4 [4.2.27] NTC18

η	hw	tw	hw/tw max	Verifica
1.2	13.4	0.6	55.46	Si

Verifiche a deformabilità

Mensola X: No; Mensola Y: No.

Frecce lungo X

Ascissa freccia	Combinazione	Freccia	Luce	L/f	L/f,min	Tipo	Verifica
100	SLE RA 1	0	200	10000	250	Totale	Si
20	SLE RA 31	0	200	10000	250	Totale	Si
20	SLE RA 30	0	200	10000	250	Totale	Si
166.7	SLE RA 29	0	200	10000	250	Totale	Si
166.7	SLE RA 28	0	200	10000	250	Totale	Si
6.7	SLE RA 2	0	200	10000	350	Variabile	Si
20	SLE RA 31	0	200	10000	350	Variabile	Si
20	SLE RA 30	0	200	10000	350	Variabile	Si
166.7	SLE RA 29	0	200	10000	350	Variabile	Si
166.7	SLE RA 28	0	200	10000	350	Variabile	Si

Frecce lungo Y

Ascissa freccia	Combinazione	Freccia	Luce	L/f	L/f,min	Tipo	Verifica
100	SLE RA 33	-0.28	200	713.4	250	Totale	Si
100	SLE RA 31	-0.28	200	713.4	250	Totale	Si
100	SLE RA 30	-0.28	200	713.4	250	Totale	Si
100	SLE RA 32	-0.28	200	713.4	250	Totale	Si
100	SLE RA 29	-0.267	200	749.7	250	Totale	Si
100	SLE RA 33	-0.278	200	718.5	350	Variabile	Si
100	SLE RA 31	-0.278	200	718.5	350	Variabile	Si
100	SLE RA 30	-0.278	200	718.5	350	Variabile	Si
100	SLE RA 32	-0.278	200	718.5	350	Variabile	Si
100	SLE RA 29	-0.265	200	755.4	350	Variabile	Si

Superelemento in acciaio composto dall'asta 227

Caratteristiche del materiale

Acciaio: S275, fyk = 2750

Caratteristiche geometriche

Lunghezza: 200
Nodo iniziale: 72 Nodo finale: 70
Cerniera iniziale: Svincolo: M2, M3 Cerniera finale: Svincolo: M2, M3
Sovraresistenza: 0% Sisma Z: No

Caratteristiche della sezione

Sezione	Rotazione	Area	Jx	Jy	ix	iy	Wx	Wy	Wplx	Wply
HEA160	0	38.82	1674.7	615.62	6.57	3.98	220.36	76.95	245.43	117.67

Verifiche di resistenza

Verifica a taglio Y §4.2.4.1.2.4 NTC18

X	Comb.	Sfruttamento	VEd	Vc,Rd	Av	Interazione taglio-torsione	Riduzione torsione	Verifica
200	SLU 130	0.02	-395.7	20032.3	13.26	Considerata	1	Si

Verifica a taglio Y SLD §4.2.4.1.2.4 NTC18

X	Comb.	Sfruttamento	VEd	Vc,Rd	Av	Interazione taglio-torsione	Riduzione torsione	Verifica
0	SLD 1	0.002	30.5	20045.7	13.26	Considerata	1	Si

Verifica a torsione §4.2.4.1.2.5 NTC18

X	Comb.	Sfruttamento torsione	TEd	TRd	Riduzione taglio resistente	Sfruttamento taglio-torsione	τEd,totale	τRd	Verifica
200	SLU 97	0.002	-24.5	14685.6	Considerata				Si

Verifica a flessione semplice X §§ 4.2.4.1.2.3 - 4.2.4.1.2.6 - 4.2.4.1.2.7 - 4.2.4.1.2.8 NTC18

X	Comb.	Sfruttamento	Classe	Mx,Ed	Mx,Rd	Rid. Mx,Rd da VEd	ρx	ρy	Verifica
100	SLU 131	0.031	1	-19785.8	642783.4	1	0	0	Si

Verifica a flessione semplice X SLD §§ 4.2.4.1.2.3 - 4.2.4.1.2.6 - 4.2.4.1.2.7 - 4.2.4.1.2.8 NTC18

X	Comb.	Sfruttamento	Classe	Mx,Ed	Mx,Rd	Rid. Mx,Rd da VEd	ρx	ρy	Verifica
100	SLD 3	0.002	1	-1523.6	642783.4	1	0	0	Si

Verifiche ad instabilità

Caratteristiche iniziali

Membratura principale per controllo snellezza; Calcolo di snellezze ed N critici condotti secondo gli assi principali;
Curva X: b; Curva Y: c; Svergolamento: Carico all'estradosso; Curva svergolamento: b;

Dati per instabilità attorno a x

Numero rit.	Presente	Ascissa	Campata	βx/m	Vincolo a entrambi estremi	λx/m	λVer
1	Si	0					
			1-2	1	Si	30.4	Si, (<200)
2	Si	200					

Dati per instabilità attorno a y

Numero rit.	Presente	Ascissa	Campata	βy/n	k,LT	kw,LT	Vincolo a entrambi estremi	λy/n	λVer
1	Si	0							
			1-2	1	1	1	Si	50.2	Si, (<200)
2	Si	200							

Verifica a svergolamento §4.2.4.1.3.2 NTC18

X	Comb.	Sfruttamento	Classe	Obblig.	Mx,Ed	Mb,Rd,x	χ,LT	λ adim. LT	L,LT	M,critico	Verifica
100	SLU 131	0.033	1	Si	-19785.8	598018.7	0.93	0.57	200	2075773.7	Si

Verifica a svergolamento SLD §4.2.4.1.3.2 NTC18

X	Comb.	Sfruttamento	Classe	Obblig.	Mx,Ed	Mb,Rd,x	χ,LT	λ adim. LT	L,LT	M,critico	Verifica
100	SLD 3	0.003	1	Si	-1523.6	598018.7	0.93	0.57	200	2075773.7	Si

Verifica di stabilità a taglio anima Y §4.2.4.1.2.4 [4.2.27] NTC18

η	hw	tw	hw/tw max	Verifica
1.2	13.4	0.6	55.46	Si

Verifica di stabilità a taglio anima Y SLD §4.2.4.1.2.4 [4.2.27] NTC18

η	hw	tw	hw/tw max	Verifica
1.2	13.4	0.6	55.46	Si

Verifiche a deformabilità

Mensola X: No; Mensola Y: No.

Frecce lungo X

Ascissa freccia	Combinazione	Freccia	Luce	L/f	L/f,min	Tipo	Verifica
33.3	SLE RA 1	0	200	10000	250	Totale	Si
6.7	SLE RA 31	0	200	10000	250	Totale	Si
6.7	SLE RA 30	0	200	10000	250	Totale	Si
6.7	SLE RA 29	0	200	10000	250	Totale	Si
6.7	SLE RA 28	0	200	10000	250	Totale	Si
6.7	SLE RA 2	0	200	10000	350	Variabile	Si
6.7	SLE RA 31	0	200	10000	350	Variabile	Si
6.7	SLE RA 30	0	200	10000	350	Variabile	Si
6.7	SLE RA 29	0	200	10000	350	Variabile	Si
6.7	SLE RA 28	0	200	10000	350	Variabile	Si

Frecce lungo Y

Ascissa freccia	Combinazione	Freccia	Luce	L/f	L/f,min	Tipo	Verifica
100	SLE RA 1	-0.002	200	10000	250	Totale	Si
100	SLE RA 31	-0.018	200	10000	250	Totale	Si
100	SLE RA 30	-0.018	200	10000	250	Totale	Si
100	SLE RA 29	-0.015	200	10000	250	Totale	Si
100	SLE RA 28	-0.015	200	10000	250	Totale	Si
166.7	SLE RA 2	0	200	10000	350	Variabile	Si
100	SLE RA 31	-0.016	200	10000	350	Variabile	Si
100	SLE RA 30	-0.016	200	10000	350	Variabile	Si
100	SLE RA 29	-0.013	200	10000	350	Variabile	Si
100	SLE RA 28	-0.013	200	10000	350	Variabile	Si

Superelemento in acciaio composto dall'asta 228

Caratteristiche del materiale

Acciaio: S275, fyk = 2750

Caratteristiche geometriche

Lunghezza: 200
Nodo iniziale: 71 Nodo finale: 69
Cerniera iniziale: Svincolo: M2, M3 Cerniera finale: Svincolo: M2, M3
Sovraresistenza: 0% Sisma Z: No

Caratteristiche della sezione

Sezione	Rotazione	Area	Jx	Jy	ix	iy	Wx	Wy	Wplx	Wply
HEA160	0	38.82	1674.7	615.62	6.57	3.98	220.36	76.95	245.43	117.67

Verifiche di resistenza

Verifica a taglio Y §4.2.4.1.2.4 NTC18

X	Comb.	Sfruttamento	VEd	Vc,Rd	Av	Interazione taglio-torsione	Riduzione torsione	Verifica
200	SLU 130	0.02	-395.7	20032.2	13.26	Considerata	1	Si

Verifica a taglio Y SLD §4.2.4.1.2.4 NTC18

X	Comb.	Sfruttamento	VEd	Vc,Rd	Av	Interazione taglio-torsione	Riduzione torsione	Verifica
200	SLD 2	0.002	-30.5	20045.7	13.26	Considerata	1	Si

Verifica a torsione §4.2.4.1.2.5 NTC18

X	Comb.	Sfruttamento torsione	TEd	TRd	Riduzione taglio resistente	Sfruttamento taglio-torsione	τEd,totale	τRd	Verifica
200	SLU 97	0.002	24.6	14685.6	Considerata				Si

Verifica a flessione semplice X §§ 4.2.4.1.2.3 - 4.2.4.1.2.6 - 4.2.4.1.2.7 - 4.2.4.1.2.8 NTC18

X	Comb.	Sfruttamento	Classe	Mx,Ed	Mx,Rd	Rid. Mx,Rd da VEd	ρx	ρy	Verifica
100	SLU 131	0.031	1	-19785.8	642783.4	1	0	0	Si

Verifica a flessione semplice X SLD §§ 4.2.4.1.2.3 - 4.2.4.1.2.6 - 4.2.4.1.2.7 - 4.2.4.1.2.8 NTC18

X	Comb.	Sfruttamento	Classe	Mx,Ed	Mx,Rd	Rid. Mx,Rd da VEd	ρx	ρy	Verifica
100	SLD 14	0.002	1	-1523.6	642783.4	1	0	0	Si

Verifiche ad instabilità

Caratteristiche iniziali

Membratura principale per controllo snellezza; Calcolo di snellezze ed N critici condotti secondo gli assi principali;
Curva X: b; Curva Y: c; Svergolamento: Carico all'estradosso; Curva svergolamento: b;

Dati per instabilità attorno a x

Numero rit.	Presente	Ascissa	Campata	βx/m	Vincolo a entrambi estremi	λx/m	λVer
1	Si	0					
			1-2	1	Si	30.4	Si, (<200)
2	Si	200					

Dati per instabilità attorno a y

Numero rit.	Presente	Ascissa	Campata	βy/n	k,LT	kw,LT	Vincolo a entrambi estremi	λy/n	λVer
1	Si	0							
			1-2	1	1	1	Si	50.2	Si, (<200)
2	Si	200							

Verifica a svergolamento §4.2.4.1.3.2 NTC18

X	Comb.	Sfruttamento	Classe	Obblig.	Mx,Ed	Mb,Rd,x	χ,LT	λ adim. LT	L,LT	M,critico	Verifica
100	SLU 131	0.033	1	Si	-19785.8	598018.7	0.93	0.57	200	2075773.7	Si

Verifica a svergolamento SLD §4.2.4.1.3.2 NTC18

X	Comb.	Sfruttamento	Classe	Obblig.	Mx,Ed	Mb,Rd,x	χ,LT	λ adim. LT	L,LT	M,critico	Verifica
100	SLD 14	0.003	1	Si	-1523.6	598018.7	0.93	0.57	200	2075773.7	Si

Verifica di stabilità a taglio anima Y §4.2.4.1.2.4 [4.2.27] NTC18

η	hw	tw	hw/tw max	Verifica
1.2	13.4	0.6	55.46	Si

Verifica di stabilità a taglio anima Y SLD §4.2.4.1.2.4 [4.2.27] NTC18

η	hw	tw	hw/tw max	Verifica
1.2	13.4	0.6	55.46	Si

Verifiche a deformabilità

Mensola X: No; Mensola Y: No.

Frecce lungo X

Ascissa freccia	Combinazione	Freccia	Luce	L/f	L/f,min	Tipo	Verifica
33.3	SLE RA 1	0	200	10000	250	Totale	Si
146.7	SLE RA 31	0	200	10000	250	Totale	Si
146.7	SLE RA 30	0	200	10000	250	Totale	Si
146.7	SLE RA 29	0	200	10000	250	Totale	Si

Ascissa freccia	Combinazione	Freccia	Luce	L/f	L/f,min	Tipo	Verifica
146.7	SLE RA 28	0	200	10000	250	Totale	Si
6.7	SLE RA 2	0	200	10000	350	Variabile	Si
146.7	SLE RA 31	0	200	10000	350	Variabile	Si
146.7	SLE RA 30	0	200	10000	350	Variabile	Si
180	SLE RA 29	0	200	10000	350	Variabile	Si
180	SLE RA 28	0	200	10000	350	Variabile	Si

Frecce lungo Y

Ascissa freccia	Combinazione	Freccia	Luce	L/f	L/f,min	Tipo	Verifica
100	SLE RA 1	-0.002	200	10000	250	Totale	Si
100	SLE RA 31	-0.018	200	10000	250	Totale	Si
100	SLE RA 30	-0.018	200	10000	250	Totale	Si
100	SLE RA 29	-0.015	200	10000	250	Totale	Si
100	SLE RA 28	-0.015	200	10000	250	Totale	Si
166.7	SLE RA 2	0	200	10000	350	Variabile	Si
100	SLE RA 31	-0.016	200	10000	350	Variabile	Si
100	SLE RA 30	-0.016	200	10000	350	Variabile	Si
100	SLE RA 29	-0.013	200	10000	350	Variabile	Si
100	SLE RA 28	-0.013	200	10000	350	Variabile	Si

Superelemento in acciaio composto dall'asta 229

Caratteristiche del materiale

Acciaio: S275, fyk = 2750

Caratteristiche geometriche

Lunghezza: 200
Nodo iniziale: 32 Nodo finale: 27
Cerniera iniziale: Svincolo: M2, M3 Cerniera finale: Svincolo: M2, M3
Sovraresistenza: 0% Sisma Z: No

Caratteristiche della sezione

Sezione	Rotazione	Area	Jx	Jy	ix	iy	Wx	Wy	Wplx	Wply
HEA160	0	38.82	1674.7	615.62	6.57	3.98	220.36	76.95	245.43	117.67

Verifiche di resistenza

Verifiche a forza assiale §4.2.4.1.2.1 - §4.2.4.1.2.2 NTC18

X	Comb.	Sfruttamento	Classe	NEd	Nc,Rd	Nt,Rd	Riduzione da taglio	ρx	ρy	Verifica
93.3	SLU 98	0.022		2224.3		101662.9	1	0	0	Si

Verifiche a forza assiale SLD §4.2.4.1.2.1 - §4.2.4.1.2.2 NTC18

X	Comb.	Sfruttamento	Classe	NEd	Nc,Rd	Nt,Rd	Riduzione da taglio	ρx	ρy	Verifica
193.3	SLD 6	0.012		1253.2		101662.9	1	0	0	Si

Verifica a taglio Y §4.2.4.1.2.4 NTC18

X	Comb.	Sfruttamento	VEd	Vc,Rd	Av	Interazione taglio-torsione	Riduzione torsione	Verifica
0	SLU 99	0.014	275.3	20040.3	13.26	Considerata	1	Si

Verifica a taglio Y SLD §4.2.4.1.2.4 NTC18

X	Comb.	Sfruttamento	VEd	Vc,Rd	Av	Interazione taglio-torsione	Riduzione torsione	Verifica
200	SLD 16	0.002	-30.5	20045.7	13.26	Considerata	1	Si

Verifica a torsione §4.2.4.1.2.5 NTC18

X	Comb.	Sfruttamento torsione	TEd	TRd	Riduzione taglio resistente	Sfruttamento taglio-torsione	τEd,totale	τRd	Verifica
200	SLU 66	0.001	9.8	14685.6	Considerata				Si

Verifica a presso/tenso flessione retta X §§ 4.2.4.1.2.3 - 4.2.4.1.2.6 - 4.2.4.1.2.7 - 4.2.4.1.2.8 NTC18

Verifiche eseguite utilizzando la formula conservativa (6.2) §6.2.1 EN 1993-1-1:2005.

X	Comb.	Sfruttamento	Classe	NEd	NRd	Rid. NRd da VEd	Mx,Ed	Mx,Rd	Rid. Mx,Rd da VEd	Rid. Mx,Rd da NEd	ρx	ρy	Verifica
100	SLU 98	0.045	1	2224.3	101662.9	1	-14773	642783	1		0	0	Si

Verifica a presso/tenso flessione retta X SLD §§ 4.2.4.1.2.3 - 4.2.4.1.2.6 - 4.2.4.1.2.7 - 4.2.4.1.2.8 NTC18

Verifiche eseguite utilizzando la formula conservativa (6.2) §6.2.1 EN 1993-1-1:2005.

X	Comb.	Sfruttamento	Classe	NEd	NRd	Rid. NRd da VEd	Mx,Ed	Mx,Rd	Rid. Mx,Rd da VEd	Rid. Mx,Rd da NEd	ρx	ρy	Verifica
100	SLD 6	0.015	1	1253.2	101662.9	1	-1524	642783	1		0	0	Si

Verifiche ad instabilità

Caratteristiche iniziali

Membratura principale per controllo snellezza; Calcolo di snellezze ed N critici condotti secondo gli assi principali;
Curva X: b; Curva Y: c; Svergolamento: Carico all'estradosso; Curva svergolamento: b;

Dati per instabilità attorno a x

Numero rit.	Presente	Ascissa	Campata	βx/m	Vincolo a entrambi estremi	λx/m	λVer
1	Si	0					
			1-2	1	Si	30.4	Si, (<200)

Numero rit.	Presente	Ascissa	Campata	βx/m	Vincolo a entrambi estremi	λx/m	λVer
2	Si	200					

Dati per instabilità attorno a y

Numero rit.	Presente	Ascissa	Campata	βy/n	k,LT	kw,LT	Vincolo a entrambi estremi	λy/n	λVer
1	Si	0							
			1-2	1	1	1	Si	50.2	Si, (<200)
2	Si	200							

Verifica a svergolamento con trazione §4.2.4.1.3.2 NTC18 - §5.5.3 ENV 1993-1-1:1994

X	Comb.	Sfruttamento	Classe	Obblig.	NEd	Mx,Ed	Mx,Eff,Ed	Mb,Rd,x	χ,LT	λ adim. LT	L,LT	M,critico	Verifica
100	SLU 31	0.012	1	Si	1863.3	-14315.5	-6911.3	598018.7	0.93	0.57	200	2075773.7	Si

Verifica di stabilità a taglio anima Y §4.2.4.1.2.4 [4.2.27] NTC18

η	hw	tw	hw/tw max	Verifica
1.2	13.4	0.6	55.46	Si

Verifica di stabilità a taglio anima Y SLD §4.2.4.1.2.4 [4.2.27] NTC18

η	hw	tw	hw/tw max	Verifica
1.2	13.4	0.6	55.46	Si

Verifiche a deformabilità

Mensola X: No; Mensola Y: No.

Frecce lungo X

Ascissa freccia	Combinazione	Freccia	Luce	L/f	L/f,min	Tipo	Verifica
46.7	SLE RA 1	0	200	10000	250	Totale	Si
33.3	SLE RA 31	0	200	10000	250	Totale	Si
33.3	SLE RA 30	0	200	10000	250	Totale	Si
33.3	SLE RA 29	0	200	10000	250	Totale	Si
33.3	SLE RA 28	0	200	10000	250	Totale	Si
6.7	SLE RA 2	0	200	10000	350	Variabile	Si
33.3	SLE RA 31	0	200	10000	350	Variabile	Si
33.3	SLE RA 30	0	200	10000	350	Variabile	Si
33.3	SLE RA 29	0	200	10000	350	Variabile	Si
33.3	SLE RA 28	0	200	10000	350	Variabile	Si

Frecce lungo Y

Ascissa freccia	Combinazione	Freccia	Luce	L/f	L/f,min	Tipo	Verifica
100	SLE RA 1	-0.002	200	10000	250	Totale	Si
100	SLE RA 31	-0.013	200	10000	250	Totale	Si
100	SLE RA 30	-0.013	200	10000	250	Totale	Si
100	SLE RA 29	-0.011	200	10000	250	Totale	Si
100	SLE RA 28	-0.011	200	10000	250	Totale	Si
86.7	SLE RA 2	0	200	10000	350	Variabile	Si
100	SLE RA 31	-0.011	200	10000	350	Variabile	Si
100	SLE RA 30	-0.011	200	10000	350	Variabile	Si
100	SLE RA 29	-0.009	200	10000	350	Variabile	Si
100	SLE RA 28	-0.009	200	10000	350	Variabile	Si

Superelemento in acciaio composto dall'asta 230

Caratteristiche del materiale

Acciaio: S275, fyk = 2750

Caratteristiche geometriche

Lunghezza: 200
Nodo iniziale: 94 Nodo finale: 92
Cerniera iniziale: Svincolo: M2, M3 Cerniera finale: Svincolo: M2, M3
Sovraresistenza: 0% Sisma Z: No

Caratteristiche della sezione

Sezione	Rotazione	Area	Jx	Jy	ix	iy	Wx	Wy	Wplx	Wply
HEA160	0	38.82	1674.7	615.62	6.57	3.98	220.36	76.95	245.43	117.67

Verifiche di resistenza

Verifiche a forza assiale §4.2.4.1.2.1 - §4.2.4.1.2.2 NTC18

X	Comb.	Sfruttamento	Classe	NEd	Nc,Rd	Nt,Rd	Riduzione da taglio	ρx	ρy	Verifica
0	SLV 5	0.001	1	-59.9	101662.9		1	0	0	Si

Verifica a taglio Y §4.2.4.1.2.4 NTC18

X	Comb.	Sfruttamento	VEd	Vc,Rd	Av	Interazione taglio-torsione	Riduzione torsione	Verifica
0	SLU 99	0.168	3366.1	20004.3	13.26	Considerata	1	Si

Verifica a taglio Y SLD §4.2.4.1.2.4 NTC18

X	Comb.	Sfruttamento	VEd	Vc,Rd	Av	Interazione taglio-torsione	Riduzione torsione	Verifica
200	SLD 16	0.002	-30.5	20045.7	13.26	Considerata	1	Si

Verifica a torsione §4.2.4.1.2.5 NTC18

X	Comb.	Sfruttamento torsione	TEd	TRd	Riduzione taglio resistente	Sfruttamento taglio-torsione	τEd,totale	τRd	Verifica
200	SLU 132	0.005	-75.7	14685.6	Considerata				Si

Verifica a flessione semplice X §§ 4.2.4.1.2.3 - 4.2.4.1.2.6 - 4.2.4.1.2.7 - 4.2.4.1.2.8 NTC18

X	Comb.	Sfruttamento	Classe	Mx,Ed	Mx,Rd	Rid. Mx,Rd da VEd	ρx	ρy	Verifica
100	SLU 99	0.262	1	-168245.4	642783.4	1	0	0	Si

Verifica a flessione semplice X SLD §§ 4.2.4.1.2.3 - 4.2.4.1.2.6 - 4.2.4.1.2.7 - 4.2.4.1.2.8 NTC18

X	Comb.	Sfruttamento	Classe	Mx,Ed	Mx,Rd	Rid. Mx,Rd da VEd	ρx	ρy	Verifica
100	SLD 3	0.002	1	-1523.6	642783.4	1	0	0	Si

Verifica a presso/tenso flessione retta X §§ 4.2.4.1.2.3 - 4.2.4.1.2.6 - 4.2.4.1.2.7 - 4.2.4.1.2.8 NTC18

Verifiche eseguite utilizzando la formula conservativa (6.2) §6.2.1 EN 1993-1-1:2005.

X	Comb.	Sfruttamento	Classe	NEd	NRd	Rid. NRd da VEd	Mx,Ed	Mx,Rd	Rid. Mx,Rd da VEd	Rid. Mx,Rd da NEd	ρx	ρy	Verifica
100	SLV 6	0.003	1	-59.9	101662.9	1	-1524	642783	1		0	0	Si

Verifiche ad instabilità

Caratteristiche iniziali

Membratura principale per controllo snellezza; Calcolo di snellezze ed N critici condotti secondo gli assi principali;
Curva X: b; Curva Y: c; Svergolamento: Carico all'estradosso; Curva svergolamento: b;

Dati per instabilità attorno a x

Numero rit.	Presente	Ascissa	Campata	βx/m	Vincolo a entrambi estremi	λx/m	λVer
1	Si	0					
			1-2	1	Si	30.4	Si, (<200)
2	Si	200					

Dati per instabilità attorno a y

Numero rit.	Presente	Ascissa	Campata	βy/n	k,LT	kw,LT	Vincolo a entrambi estremi	λy/n	λVer
1	Si	0							
			1-2	1	1	1	Si	50.2	Si, (<200)
2	Si	200							

Verifica a svergolamento §4.2.4.1.3.2 NTC18

X	Comb.	Sfruttamento	Classe	Obblig.	Mx,Ed	Mb,Rd,x	χ,LT	λ adim. LT	L,LT	M,critico	Verifica
100	SLU 99	0.281	1	Si	-168245.4	598018.7	0.93	0.57	200	2075773.7	Si

Verifica a svergolamento SLD §4.2.4.1.3.2 NTC18

X	Comb.	Sfruttamento	Classe	Obblig.	Mx,Ed	Mb,Rd,x	χ,LT	λ adim. LT	L,LT	M,critico	Verifica
100	SLD 3	0.003	1	Si	-1523.6	598018.7	0.93	0.57	200	2075773.7	Si

Verifica a svergolamento con trazione §4.2.4.1.3.2 NTC18 - §5.5.3 ENV 1993-1-1:1994

X	Comb.	Sfruttamento	Classe	Obblig.	NEd	Mx,Ed	Mx,Eff,Ed	Mb,Rd,x	χ,LT	λ adim. LT	L,LT	M,critico	Verifica
100	SLV 8	0.002	1	Si	52.7	-1523.6	-1314.3	598018.7	0.93	0.57	200	2075773.7	Si

Verifica di stabilità per pressoflessione §C.4.2.4.1.3.3.2 NTC18

X	Comb.	Sfruttamento	Classe	NEd	NRk	Mx,Ed max	Mx,Rk	My,Ed max	My,Rk	χ,x	χ,y	kxx	kxy	kyx	kyy	χ,LT	Verifica
0	SLV 5	0.003	1	-59.9	106746.1	1523.6	674922.6	0	323595.1	0.945	0.798	0.95	0.36	1	0.6	0.93	Si

Verifica di stabilità a taglio anima Y §4.2.4.1.2.4 [4.2.27] NTC18

η	hw	tw	hw/tw max	Verifica
1.2	13.4	0.6	55.46	Si

Verifica di stabilità a taglio anima Y SLD §4.2.4.1.2.4 [4.2.27] NTC18

η	hw	tw	hw/tw max	Verifica
1.2	13.4	0.6	55.46	Si

Verifiche a deformabilità

Mensola X: No; Mensola Y: No.

Frecce lungo X

Ascissa freccia	Combinazione	Freccia	Luce	L/f	L/f,min	Tipo	Verifica
193.3	SLE RA 1	0	200	10000	250	Totale	Si
73.3	SLE RA 31	0	200	10000	250	Totale	Si
73.3	SLE RA 30	0	200	10000	250	Totale	Si
73.3	SLE RA 29	0	200	10000	250	Totale	Si
73.3	SLE RA 28	0	200	10000	250	Totale	Si
100	SLE RA 2	0	200	10000	350	Variabile	Si
33.3	SLE RA 31	0	200	10000	350	Variabile	Si
33.3	SLE RA 30	0	200	10000	350	Variabile	Si
33.3	SLE RA 29	0	200	10000	350	Variabile	Si
33.3	SLE RA 28	0	200	10000	350	Variabile	Si

Frecce lungo Y

Ascissa freccia	Combinazione	Freccia	Luce	L/f	L/f,min	Tipo	Verifica
100	SLE RA 30	-0.149	200	1341.3	250	Totale	Si
100	SLE RA 32	-0.149	200	1341.3	250	Totale	Si
100	SLE RA 31	-0.149	200	1341.3	250	Totale	Si
100	SLE RA 33	-0.149	200	1341.3	250	Totale	Si
100	SLE RA 26	-0.141	200	1420.7	250	Totale	Si
100	SLE RA 30	-0.147	200	1359.8	350	Variabile	Si
100	SLE RA 32	-0.147	200	1359.8	350	Variabile	Si
100	SLE RA 31	-0.147	200	1359.8	350	Variabile	Si
100	SLE RA 33	-0.147	200	1359.8	350	Variabile	Si
100	SLE RA 26	-0.139	200	1441.4	350	Variabile	Si

Superelemento in acciaio composto dall'asta 231

Caratteristiche del materiale

Acciaio: S275, fyk = 2750

Caratteristiche geometriche

Lunghezza: 200
Nodo iniziale: 93 Nodo finale: 91
Cerniera iniziale: Svincolo: M2, M3 Cerniera finale: Svincolo: M2, M3
Sovraresistenza: 0% Sisma Z: No

Caratteristiche della sezione

Sezione	Rotazione	Area	Jx	Jy	ix	iy	Wx	Wy	Wplx	Wply
HEA160	0	38.82	1674.7	615.62	6.57	3.98	220.36	76.95	245.43	117.67

Verifiche di resistenza

Verifiche a forza assiale §4.2.4.1.2.1 - §4.2.4.1.2.2 NTC18

X	Comb.	Sfruttamento	Classe	NEd	Nc,Rd	Nt,Rd	Riduzione da taglio	ρx	ρy	Verifica
0	SLV 9	0.001	1	-59.9	101662.9		1	0	0	Si

Verifica a taglio Y §4.2.4.1.2.4 NTC18

X	Comb.	Sfruttamento	VEd	Vc,Rd	Av	Interazione taglio-torsione	Riduzione torsione	Verifica
0	SLU 132	0.168	3368.4	20004.3	13.26	Considerata	1	Si

Verifica a taglio Y SLD §4.2.4.1.2.4 NTC18

X	Comb.	Sfruttamento	VEd	Vc,Rd	Av	Interazione taglio-torsione	Riduzione torsione	Verifica
200	SLD 2	0.002	-30.5	20045.7	13.26	Considerata	1	Si

Verifica a torsione §4.2.4.1.2.5 NTC18

X	Comb.	Sfruttamento torsione	TEd	TRd	Riduzione taglio resistente	Sfruttamento taglio-torsione	τEd,totale	τRd	Verifica
200	SLU 132	0.005	75.7	14685.6	Considerata				Si

Verifica a flessione semplice X §§ 4.2.4.1.2.3 - 4.2.4.1.2.6 - 4.2.4.1.2.7 - 4.2.4.1.2.8 NTC18

X	Comb.	Sfruttamento	Classe	Mx,Ed	Mx,Rd	Rid. Mx,Rd da VEd	ρx	ρy	Verifica
100	SLU 131	0.262	1	-168422.3	642783.4	1	0	0	Si

Verifica a flessione semplice X SLD §§ 4.2.4.1.2.3 - 4.2.4.1.2.6 - 4.2.4.1.2.7 - 4.2.4.1.2.8 NTC18

X	Comb.	Sfruttamento	Classe	Mx,Ed	Mx,Rd	Rid. Mx,Rd da VEd	ρx	ρy	Verifica
100	SLD 14	0.002	1	-1523.6	642783.4	1	0	0	Si

Verifica a presso/tenso flessione retta X §§ 4.2.4.1.2.3 - 4.2.4.1.2.6 - 4.2.4.1.2.7 - 4.2.4.1.2.8 NTC18

Verifiche eseguite utilizzando la formula conservativa (6.2) §6.2.1 EN 1993-1-1:2005.

X	Comb.	Sfruttamento	Classe	NEd	NRd	Rid. NRd da VEd	Mx,Ed	Mx,Rd	Rid. Mx,Rd da VEd	Rid. Mx,Rd da NEd	ρx	ρy	Verifica
100	SLV 10	0.003	1	-59.9	101662.9	1	-1524	642783	1		0	0	Si

Verifiche ad instabilità

Caratteristiche iniziali

Membratura principale per controllo snellezza; Calcolo di snellezze ed N critici condotti secondo gli assi principali;
Curva X: b; Curva Y: c; Svergolamento: Carico all'estradosso; Curva svergolamento: b;

Dati per instabilità attorno a x

Numero rit.	Presente	Ascissa	Campata	βx/m	Vincolo a entrambi estremi	λx/m	λVer
1	Si	0					
			1-2	1	Si	30.4	Si, (<200)
2	Si	200					

Dati per instabilità attorno a y

Numero rit.	Presente	Ascissa	Campata	βy/n	k,LT	kw,LT	Vincolo a entrambi estremi	λy/n	λVer
1	Si	0							
			1-2	1	1	1	Si	50.2	Si, (<200)
2	Si	200							

Verifica a svergolamento §4.2.4.1.3.2 NTC18

X	Comb.	Sfruttamento	Classe	Obblig.	Mx,Ed	Mb,Rd,x	χ,LT	λ adim. LT	L,LT	M,critico	Verifica
100	SLU 131	0.282	1	Si	-168422.3	598018.7	0.93	0.57	200	2075773.7	Si

Verifica a svergolamento SLD §4.2.4.1.3.2 NTC18

X	Comb.	Sfruttamento	Classe	Obblig.	Mx,Ed	Mb,Rd,x	χ,LT	λ adim. LT	L,LT	M,critico	Verifica
100	SLD 14	0.003	1	Si	-1523.6	598018.7	0.93	0.57	200	2075773.7	Si

Verifica a svergolamento con trazione §4.2.4.1.3.2 NTC18 - §5.5.3 ENV 1993-1-1:1994

X	Comb.	Sfruttamento	Classe	Obblig.	NEd	Mx,Ed	Mx,Eff,Ed	Mb,Rd,x	χ,LT	λ adim. LT	L,LT	M,critico	Verifica
100	SLV 11	0.002	1	Si	52.7	-1523.6	-1314.3	598018.7	0.93	0.57	200	2075773.7	Si

Verifica di stabilità per pressoflessione §C.4.2.4.1.3.3.2 NTC18

X	Comb.	Sfruttamento	Classe	NEd	NRk	Mx,Ed max	Mx,Rk	My,Ed max	My,Rk	χ,x	χ,y	kxx	kxy	kyx	kyy	χ,LT	Verifica
200	SLV 10	0.003	1	-59.9	106746.1	1523.6	674922.6	0	323595.1	0.945	0.798	0.95	0.36	1	0.6	0.93	Si

Verifica di stabilità a taglio anima Y §4.2.4.1.2.4 [4.2.27] NTC18

η	hw	tw	hw/tw max	Verifica
1.2	13.4	0.6	55.46	Si

Verifica di stabilità a taglio anima Y SLD §4.2.4.1.2.4 [4.2.27] NTC18

η	hw	tw	hw/tw max	Verifica
1.2	13.4	0.6	55.46	Si

Verifiche a deformabilità

Mensola X: No; Mensola Y: No.

Frecce lungo X

Ascissa freccia	Combinazione	Freccia	Luce	L/f	L/f,min	Tipo	Verifica
193.3	SLE RA 1	0	200	10000	250	Totale	Si
6.7	SLE RA 31	0	200	10000	250	Totale	Si
6.7	SLE RA 30	0	200	10000	250	Totale	Si
6.7	SLE RA 29	0	200	10000	250	Totale	Si
6.7	SLE RA 28	0	200	10000	250	Totale	Si
100	SLE RA 2	0	200	10000	350	Variabile	Si
6.7	SLE RA 31	0	200	10000	350	Variabile	Si
6.7	SLE RA 30	0	200	10000	350	Variabile	Si
6.7	SLE RA 29	0	200	10000	350	Variabile	Si
6.7	SLE RA 28	0	200	10000	350	Variabile	Si

Frecce lungo Y

Ascissa freccia	Combinazione	Freccia	Luce	L/f	L/f,min	Tipo	Verifica
100	SLE RA 30	-0.149	200	1339.9	250	Totale	Si
100	SLE RA 32	-0.149	200	1339.9	250	Totale	Si
100	SLE RA 31	-0.149	200	1339.9	250	Totale	Si
100	SLE RA 33	-0.149	200	1339.9	250	Totale	Si
100	SLE RA 26	-0.141	200	1419.4	250	Totale	Si
100	SLE RA 30	-0.147	200	1358.3	350	Variabile	Si
100	SLE RA 32	-0.147	200	1358.3	350	Variabile	Si
100	SLE RA 31	-0.147	200	1358.3	350	Variabile	Si
100	SLE RA 33	-0.147	200	1358.3	350	Variabile	Si
100	SLE RA 26	-0.139	200	1440	350	Variabile	Si

Superelemento in acciaio composto dall'asta 232

Caratteristiche del materiale

Acciaio: S275, fyk = 2750

Caratteristiche geometriche

Lunghezza: 200
Nodo iniziale: 114 Nodo finale: 113
Cerniera iniziale: Svincolo: M2, M3 Cerniera finale: Svincolo: M2, M3
Sovraresistenza: 0% Sisma Z: No

Caratteristiche della sezione

Sezione	Rotazione	Area	Jx	Jy	ix	iy	Wx	Wy	Wplx	Wply
HEA160	0	38.82	1674.7	615.62	6.57	3.98	220.36	76.95	245.43	117.67

Verifiche di resistenza

Verifiche a forza assiale §4.2.4.1.2.1 - §4.2.4.1.2.2 NTC18

X	Comb.	Sfruttamento	Classe	NEd	Nc,Rd	Nt,Rd	Riduzione da taglio	ρx	ρy	Verifica
106.7	SLV 5	0.003		276.5		101662.9	1	0	0	Si

Verifiche a forza assiale SLD §4.2.4.1.2.1 - §4.2.4.1.2.2 NTC18

X	Comb.	Sfruttamento	Classe	NEd	Nc,Rd	Nt,Rd	Riduzione da taglio	ρx	ρy	Verifica
0	SLD 5	0.001		105.3		101662.9	1	0	0	Si

Verifica a taglio Y §4.2.4.1.2.4 NTC18

X	Comb.	Sfruttamento	VEd	Vc,Rd	Av	Interazione taglio-torsione	Riduzione torsione	Verifica
0	SLU 129	0.316	6332.4	20045.7	13.26	Considerata	1	Si

Verifica a taglio Y SLD §4.2.4.1.2.4 NTC18

X	Comb.	Sfruttamento	VEd	Vc,Rd	Av	Interazione taglio-torsione	Riduzione torsione	Verifica
0	SLD 1	0.002	30.5	20045.7	13.26	Considerata	1	Si

Verifica a flessione semplice X §§ 4.2.4.1.2.3 - 4.2.4.1.2.6 - 4.2.4.1.2.7 - 4.2.4.1.2.8 NTC18

X	Comb.	Sfruttamento	Classe	Mx,Ed	Mx,Rd	Rid. Mx,Rd da VEd	ρx	ρy	Verifica
100	SLU 132	0.493	1	-316621.6	642783.4	1	0	0	Si

Verifica a flessione semplice X SLD §§ 4.2.4.1.2.3 - 4.2.4.1.2.6 - 4.2.4.1.2.7 - 4.2.4.1.2.8 NTC18

X	Comb.	Sfruttamento	Classe	Mx,Ed	Mx,Rd	Rid. Mx,Rd da VEd	ρx	ρy	Verifica
100	SLD 4	0.002	1	-1523.6	642783.4	1	0	0	Si

Verifica a presso/tenso flessione retta X §§ 4.2.4.1.2.3 - 4.2.4.1.2.6 - 4.2.4.1.2.7 - 4.2.4.1.2.8 NTC18

Verifiche eseguite utilizzando la formula conservativa (6.2) §6.2.1 EN 1993-1-1:2005.

X	Comb.	Sfruttamento	Classe	NEd	NRd	Rid. NRd da VEd	Mx,Ed	Mx,Rd	Rid. Mx,Rd da VEd	Rid. Mx,Rd da NEd	ρx	ρy	Verifica
100	SLV 6	0.005	1	276.5	101662.9	1	-1524	642783	1		0	0	Si

Verifica a presso/tenso flessione retta X SLD §§ 4.2.4.1.2.3 - 4.2.4.1.2.6 - 4.2.4.1.2.7 - 4.2.4.1.2.8 NTC18

Verifiche eseguite utilizzando la formula conservativa (6.2) §6.2.1 EN 1993-1-1:2005.

X	Comb.	Sfruttamento	Classe	NEd	NRd	Rid. NRd da VEd	Mx,Ed	Mx,Rd	Rid. Mx,Rd da VEd	Rid. Mx,Rd da NEd	ρx	ρy	Verifica
100	SLD 6	0.003	1	105.3	101662.9	1	-1524	642783	1		0	0	Si

Verifiche ad instabilità

Caratteristiche iniziali

Membratura principale per controllo snellezza; Calcolo di snellezze ed N critici condotti secondo gli assi principali;
Curva X: b; Curva Y: c; Svergolamento: Carico all'estradosso; Curva svergolamento: b;

Dati per instabilità attorno a x

Numero rit.	Presente	Ascissa	Campata	βx/m	Vincolo a entrambi estremi	λx/m	λVer
1	Si	0					
			1-2	1	Si	30.4	Si, (<200)
2	Si	200					

Dati per instabilità attorno a y

Numero rit.	Presente	Ascissa	Campata	βy/n	k,LT	kw,LT	Vincolo a entrambi estremi	λy/n	λVer
1	Si	0							
			1-2	1	1	1	Si	50.2	Si, (<200)
2	Si	200							

Verifica a svergolamento §4.2.4.1.3.2 NTC18

X	Comb.	Sfruttamento	Classe	Obblig.	Mx,Ed	Mb,Rd,x	χ,LT	λ adim. LT	L,LT	M,critico	Verifica
100	SLU 132	0.529	1	Si	-316621.6	598018.7	0.93	0.57	200	2075773.7	Si

Verifica a svergolamento SLD §4.2.4.1.3.2 NTC18

X	Comb.	Sfruttamento	Classe	Obblig.	Mx,Ed	Mb,Rd,x	χ,LT	λ adim. LT	L,LT	M,critico	Verifica
100	SLD 4	0.003	1	Si	-1523.6	598018.7	0.93	0.57	200	2075773.7	Si

Verifica a svergolamento con trazione §4.2.4.1.3.2 NTC18 - §5.5.3 ENV 1993-1-1:1994

X	Comb.	Sfruttamento	Classe	Obblig.	NEd	Mx,Ed	Mx,Eff,Ed	Mb,Rd,x	χ,LT	λ adim. LT	L,LT	M,critico	Verifica
100	SLV 13	0.002	1	Si	83.4	-1523.6	-1191.9	598018.7	0.93	0.57	200	2075773.7	Si

Verifica a svergolamento con trazione SLD §4.2.4.1.3.2 NTC18 - §5.5.3 ENV 1993-1-1:1994

X	Comb.	Sfruttamento	Classe	Obblig.	NEd	Mx,Ed	Mx,Eff,Ed	Mb,Rd,x	χ,LT	λ adim. LT	L,LT	M,critico	Verifica
100	SLD 9	0.002	1	Si	105.3	-1523.6	-1105.2	598018.7	0.93	0.57	200	2075773.7	Si

Verifica di stabilità per pressoflessione §C.4.2.4.1.3.3.2 NTC18

X	Comb.	Sfruttamento	Classe	NEd	NRk	Mx,Ed max	Mx,Rk	My,Ed max	My,Rk	χ,x	χ,y	kxx	kxy	kyx	kyy	χ,LT	Verifica
186.7	SLV 12	0.006	1	-275.2	106746.1	1523.6	674922.6	0	323595.1	0.945	0.798	0.95	0.361	1	0.601	0.93	Si

Verifica di stabilità per pressoflessione SLD §C.4.2.4.1.3.3.2 NTC18

X	Comb.	Sfruttamento	Classe	NEd	NRk	Mx,Ed max	Mx,Rk	My,Ed max	My,Rk	χ,x	χ,y	kxx	kxy	kyx	kyy	χ,LT	Verifica
200	SLD 12	0.004	1	-103.9	106746.1	1523.6	674922.6	0	323595.1	0.945	0.798	0.95	0.36	1	0.6	0.93	Si

Verifica di stabilità a taglio anima Y §4.2.4.1.2.4 [4.2.27] NTC18

η	hw	tw	hw/tw max	Verifica
1.2	13.4	0.6	55.46	Si

Verifica di stabilità a taglio anima Y SLD §4.2.4.1.2.4 [4.2.27] NTC18

η	hw	tw	hw/tw max	Verifica
1.2	13.4	0.6	55.46	Si

Verifiche a deformabilità

Mensola X: No; Mensola Y: No.

Frecce lungo X

Ascissa freccia	Combinazione	Freccia	Luce	L/f	L/f,min	Tipo	Verifica
100	SLE RA 1	0	200	10000	250	Totale	Si
13.3	SLE RA 31	0	200	10000	250	Totale	Si
13.3	SLE RA 30	0	200	10000	250	Totale	Si
13.3	SLE RA 29	0	200	10000	250	Totale	Si
13.3	SLE RA 28	0	200	10000	250	Totale	Si
193.3	SLE RA 2	0	200	10000	350	Variabile	Si
13.3	SLE RA 31	0	200	10000	350	Variabile	Si
13.3	SLE RA 30	0	200	10000	350	Variabile	Si
13.3	SLE RA 29	0	200	10000	350	Variabile	Si
13.3	SLE RA 28	0	200	10000	350	Variabile	Si

Frecce lungo Y

Ascissa freccia	Combinazione	Freccia	Luce	L/f	L/f,min	Tipo	Verifica
100	SLE RA 33	-0.28	200	713.4	250	Totale	Si
100	SLE RA 32	-0.28	200	713.4	250	Totale	Si
100	SLE RA 31	-0.28	200	713.4	250	Totale	Si
100	SLE RA 30	-0.28	200	713.4	250	Totale	Si
100	SLE RA 29	-0.267	200	749.7	250	Totale	Si
100	SLE RA 33	-0.278	200	718.5	350	Variabile	Si
100	SLE RA 32	-0.278	200	718.5	350	Variabile	Si
100	SLE RA 31	-0.278	200	718.5	350	Variabile	Si

Ascissa freccia	Combinazione	Freccia	Luce	L/f	L/f,min	Tipo	Verifica
100	SLE RA 30	-0.278	200	718.5	350	Variabile	Si
100	SLE RA 29	-0.265	200	755.4	350	Variabile	Si

Superelemento in acciaio composto dall'asta 233

Caratteristiche del materiale

Acciaio: S275, fyk = 2750

Caratteristiche geometriche

Lunghezza: 200
Nodo iniziale: 37 Nodo finale: 33
Cerniera iniziale: Svincolo: M2, M3 Cerniera finale: Svincolo: M2, M3
Sovraresistenza: 0% Sisma Z: No

Caratteristiche della sezione

Sezione	Rotazione	Area	Jx	Jy	ix	iy	Wx	Wy	Wplx	Wply
HEA160	0	38.82	1674.7	615.62	6.57	3.98	220.36	76.95	245.43	117.67

Verifiche di resistenza

Verifiche a forza assiale §4.2.4.1.2.1 - §4.2.4.1.2.2 NTC18

X	Comb.	Sfruttamento	Classe	NEd	Nc,Rd	Nt,Rd	Riduzione da taglio	ρx	ρy	Verifica
200	SLV 12	0.003		329.5		101662.9	1	0	0	Si

Verifiche a forza assiale SLD §4.2.4.1.2.1 - §4.2.4.1.2.2 NTC18

X	Comb.	Sfruttamento	Classe	NEd	Nc,Rd	Nt,Rd	Riduzione da taglio	ρx	ρy	Verifica
200	SLD 11	0.002		227.6		101662.9	1	0	0	Si

Verifica a taglio Y §4.2.4.1.2.4 NTC18

X	Comb.	Sfruttamento	VEd	Vc,Rd	Av	Interazione taglio-torsione	Riduzione torsione	Verifica
200	SLU 99	0.014	-276.3	20031	13.26	Considerata	1	Si

Verifica a taglio Y SLD §4.2.4.1.2.4 NTC18

X	Comb.	Sfruttamento	VEd	Vc,Rd	Av	Interazione taglio-torsione	Riduzione torsione	Verifica
200	SLD 2	0.002	-30.5	20026.7	13.26	Considerata	1	Si

Verifica a torsione §4.2.4.1.2.5 NTC18

X	Comb.	Sfruttamento torsione	TEd	TRd	Riduzione taglio resistente	Sfruttamento taglio-torsione	τEd,totale	τRd	Verifica
140	SLV 2	0.004	65.9	14685.6	Considerata				Si

Verifica a torsione SLD §4.2.4.1.2.5 NTC18

X	Comb.	Sfruttamento torsione	TEd	TRd	Riduzione taglio resistente	Sfruttamento taglio-torsione	τEd,totale	τRd	Verifica
0	SLD 1	0.002	34.6	14685.6	Considerata				Si

Verifica a flessione semplice X §§ 4.2.4.1.2.3 - 4.2.4.1.2.6 - 4.2.4.1.2.7 - 4.2.4.1.2.8 NTC18

X	Comb.	Sfruttamento	Classe	Mx,Ed	Mx,Rd	Rid. Mx,Rd da VEd	ρx	ρy	Verifica
100	SLV 9	0.002	1	-1523.6	642783.4	1	0	0	Si

Verifica a presso/tenso flessione retta X §§ 4.2.4.1.2.3 - 4.2.4.1.2.6 - 4.2.4.1.2.7 - 4.2.4.1.2.8 NTC18

Verifiche eseguite utilizzando la formula conservativa (6.2) §6.2.1 EN 1993-1-1:2005.

X	Comb.	Sfruttamento	Classe	NEd	NRd	Rid. NRd da VEd	Mx,Ed	Mx,Rd	Rid. Mx,Rd da VEd	Rid. Mx,Rd da NEd	ρx	ρy	Verifica
100	SLU 98	0.026	1	304.5	101662.9	1	-14780	642783	1		0	0	Si

Verifica a presso/tenso flessione retta X SLD §§ 4.2.4.1.2.3 - 4.2.4.1.2.6 - 4.2.4.1.2.7 - 4.2.4.1.2.8 NTC18

Verifiche eseguite utilizzando la formula conservativa (6.2) §6.2.1 EN 1993-1-1:2005.

X	Comb.	Sfruttamento	Classe	NEd	NRd	Rid. NRd da VEd	Mx,Ed	Mx,Rd	Rid. Mx,Rd da VEd	Rid. Mx,Rd da NEd	ρx	ρy	Verifica
100	SLD 12	0.005	1	227.6	101662.9	1	-1524	642783	1		0	0	Si

Verifiche ad instabilità

Caratteristiche iniziali

Membratura principale per controllo snellezza; Calcolo di snellezze ed N critici condotti secondo gli assi principali;
Curva X: b; Curva Y: c; Svergolamento: Carico all'estradosso; Curva svergolamento: b;

Dati per instabilità attorno a x

Numero rit.	Presente	Ascissa	Campata	βx/m	Vincolo a entrambi estremi	λx/m	λVer
1	Si	0					
			1-2	1	Si	30.4	Si, (<200)
2	Si	200					

Dati per instabilità attorno a y

Numero rit.	Presente	Ascissa	Campata	βy/n	k,LT	kw,LT	Vincolo a entrambi estremi	λy/n	λVer
1	Si	0							
			1-2	1	1	1	Si	50.2	Si, (<200)
2	Si	200							

Verifica a svergolamento §4.2.4.1.3.2 NTC18

X	Comb.	Sfruttamento	Classe	Obblig.	Mx,Ed	Mb,Rd,x	χ,LT	λ adim. LT	L,LT	M,critico	Verifica
100	SLV 9	0.003	1	Si	-1523.6	598018.7	0.93	0.57	200	2075773.7	Si

Verifica a svergolamento con trazione §4.2.4.1.3.2 NTC18 - §5.5.3 ENV 1993-1-1:1994

X	Comb.	Sfruttamento	Classe	Obblig.	NEd	Mx,Ed	Mx,Eff,Ed	Mb,Rd,x	χ,LT	λ adim. LT	L,LT	M,critico	Verifica
100	SLU 130	0.023	1	Si	304.3	-14780.1	-13570.7	598018.7	0.93	0.57	200	2075773.7	Si

Verifica a svergolamento con trazione SLD §4.2.4.1.3.2 NTC18 - §5.5.3 ENV 1993-1-1:1994

X	Comb.	Sfruttamento	Classe	Obblig.	NEd	Mx,Ed	Mx,Eff,Ed	Mb,Rd,x	χ,LT	λ adim. LT	L,LT	M,critico	Verifica
100	SLD 5	0.002	1	Si	103	-1523.6	-1114.4	598018.7	0.93	0.57	200	2075773.7	Si

Verifica di stabilità a taglio anima Y §4.2.4.1.2.4 [4.2.27] NTC18

η	hw	tw	hw/tw max	Verifica
1.2	13.4	0.6	55.46	Si

Verifica di stabilità a taglio anima Y SLD §4.2.4.1.2.4 [4.2.27] NTC18

η	hw	tw	hw/tw max	Verifica
1.2	13.4	0.6	55.46	Si

Verifiche a deformabilità

Mensola X: No; Mensola Y: No.

Frecce lungo X

Ascissa freccia	Combinazione	Freccia	Luce	L/f	L/f,min	Tipo	Verifica
193.3	SLE RA 1	0	200	10000	250	Totale	Si
166.7	SLE RA 31	0	200	10000	250	Totale	Si
166.7	SLE RA 30	0	200	10000	250	Totale	Si
166.7	SLE RA 29	0	200	10000	250	Totale	Si
166.7	SLE RA 28	0	200	10000	250	Totale	Si
46.7	SLE RA 2	0	200	10000	350	Variabile	Si
180	SLE RA 31	0	200	10000	350	Variabile	Si
180	SLE RA 30	0	200	10000	350	Variabile	Si
180	SLE RA 29	0	200	10000	350	Variabile	Si
180	SLE RA 28	0	200	10000	350	Variabile	Si

Frecce lungo Y

Ascissa freccia	Combinazione	Freccia	Luce	L/f	L/f,min	Tipo	Verifica
100	SLE RA 1	-0.002	200	10000	250	Totale	Si
100	SLE RA 31	-0.013	200	10000	250	Totale	Si
100	SLE RA 30	-0.013	200	10000	250	Totale	Si
100	SLE RA 29	-0.011	200	10000	250	Totale	Si
100	SLE RA 28	-0.011	200	10000	250	Totale	Si
6.7	SLE RA 2	0	200	10000	350	Variabile	Si
100	SLE RA 31	-0.011	200	10000	350	Variabile	Si
100	SLE RA 30	-0.011	200	10000	350	Variabile	Si
100	SLE RA 29	-0.009	200	10000	350	Variabile	Si
100	SLE RA 28	-0.009	200	10000	350	Variabile	Si

Superelemento in acciaio composto dall'asta 234

Caratteristiche del materiale

Acciaio: S275, fyk = 2750

Caratteristiche geometriche

Lunghezza: 200
Nodo iniziale: 33 Nodo finale: 29
Cerniera iniziale: Svincolo: M2, M3 Cerniera finale: Svincolo: M2, M3
Sovraresistenza: 0% Sisma Z: No

Caratteristiche della sezione

Sezione	Rotazione	Area	Jx	Jy	ix	iy	Wx	Wy	Wplx	Wply
HEA160	0	38.82	1674.7	615.62	6.57	3.98	220.36	76.95	245.43	117.67

Verifiche di resistenza

Verifiche a forza assiale §4.2.4.1.2.1 - §4.2.4.1.2.2 NTC18

X	Comb.	Sfruttamento	Classe	NEd	Nc,Rd	Nt,Rd	Riduzione da taglio	ρx	ρy	Verifica
160	SLU 98	0.008		808.5		101662.9	1	0	0	Si

Verifiche a forza assiale SLD §4.2.4.1.2.1 - §4.2.4.1.2.2 NTC18

X	Comb.	Sfruttamento	Classe	NEd	Nc,Rd	Nt,Rd	Riduzione da taglio	ρx	ρy	Verifica
200	SLD 11	0.004		442.2		101662.9	1	0	0	Si

Verifica a taglio Y §4.2.4.1.2.4 NTC18

X	Comb.	Sfruttamento	VEd	Vc,Rd	Av	Interazione taglio-torsione	Riduzione torsione	Verifica
200	SLU 99	0.014	-276.4	20045.7	13.26	Considerata	1	Si

Verifica a taglio Y SLD §4.2.4.1.2.4 NTC18

X	Comb.	Sfruttamento	VEd	Vc,Rd	Av	Interazione taglio-torsione	Riduzione torsione	Verifica
200	SLD 2	0.002	-30.5	20045.7	13.26	Considerata	1	Si

Verifica a presso/tenso flessione retta X §§ 4.2.4.1.2.3 - 4.2.4.1.2.6 - 4.2.4.1.2.7 - 4.2.4.1.2.8 NTC18

Verifiche eseguite utilizzando la formula conservativa (6.2) §6.2.1 EN 1993-1-1:2005.

X	Comb.	Sfruttamento	Classe	NEd	NRd	Rid. NRd da VEd	Mx,Ed	Mx,Rd	Rid. Mx,Rd da VEd	Rid. Mx,Rd da NEd	ρx	ρy	Verifica
100	SLU 131	0.031	1	808.5	101662.9	1	-14785	642783	1		0	0	Si

Verifica a presso/tenso flessione retta X SLD §§ 4.2.4.1.2.3 - 4.2.4.1.2.6 - 4.2.4.1.2.7 - 4.2.4.1.2.8 NTC18

Verifiche eseguite utilizzando la formula conservativa (6.2) §6.2.1 EN 1993-1-1:2005.

X	Comb.	Sfruttamento	Classe	NEd	NRd	Rid. NRd da VEd	Mx,Ed	Mx,Rd	Rid. Mx,Rd da VEd	Rid. Mx,Rd da NEd	ρx	ρy	Verifica
100	SLD 12	0.007	1	442.2	101662.9	1	-1524	642783	1		0	0	Si

Verifiche ad instabilità

Caratteristiche iniziali

Membratura principale per controllo snellezza; Calcolo di snellezze ed N critici condotti secondo gli assi principali;
Curva X: b; Curva Y: c; Svergolamento: Carico all'estradosso; Curva svergolamento: b;

Dati per instabilità attorno a x

Numero rit.	Presente	Ascissa	Campata	βx/m	Vincolo a entrambi estremi	λx/m	λVer
1	Si	0					
			1-2	1	Si	30.4	Si, (<200)
2	Si	200					

Dati per instabilità attorno a y

Numero rit.	Presente	Ascissa	Campata	βy/n	k,LT	kw,LT	Vincolo a entrambi estremi	λy/n	λVer
1	Si	0							
			1-2	1	1	1	Si	50.2	Si, (<200)
2	Si	200							

Verifica a svergolamento con trazione §4.2.4.1.3.2 NTC18 - §5.5.3 ENV 1993-1-1:1994

X	Comb.	Sfruttamento	Classe	Obblig.	NEd	Mx,Ed	Mx,Eff,Ed	Mb,Rd,x	χ,LT	λ adim. LT	L,LT	M,critico	Verifica
100	SLU 31	0.019	1	Si	677.1	-14327.8	-11637.1	598018.7	0.93	0.57	200	2075773.7	Si

Verifica di stabilità a taglio anima Y §4.2.4.1.2.4 [4.2.27] NTC18

η	hw	tw	hw/tw max	Verifica
1.2	13.4	0.6	55.46	Si

Verifica di stabilità a taglio anima Y SLD §4.2.4.1.2.4 [4.2.27] NTC18

η	hw	tw	hw/tw max	Verifica
1.2	13.4	0.6	55.46	Si

Verifiche a deformabilità

Mensola X: No; Mensola Y: No.

Frecce lungo X

Ascissa freccia	Combinazione	Freccia	Luce	L/f	L/f,min	Tipo	Verifica
53.3	SLE RA 1	0	200	10000	250	Totale	Si
106.7	SLE RA 31	0	200	10000	250	Totale	Si
106.7	SLE RA 30	0	200	10000	250	Totale	Si
106.7	SLE RA 29	0	200	10000	250	Totale	Si
106.7	SLE RA 28	0	200	10000	250	Totale	Si
33.3	SLE RA 2	0	200	10000	350	Variabile	Si
106.7	SLE RA 31	0	200	10000	350	Variabile	Si
106.7	SLE RA 30	0	200	10000	350	Variabile	Si
106.7	SLE RA 29	0	200	10000	350	Variabile	Si
106.7	SLE RA 28	0	200	10000	350	Variabile	Si

Frecce lungo Y

Ascissa freccia	Combinazione	Freccia	Luce	L/f	L/f,min	Tipo	Verifica
100	SLE RA 1	-0.002	200	10000	250	Totale	Si
100	SLE RA 31	-0.013	200	10000	250	Totale	Si
100	SLE RA 30	-0.013	200	10000	250	Totale	Si
100	SLE RA 29	-0.011	200	10000	250	Totale	Si
100	SLE RA 28	-0.011	200	10000	250	Totale	Si
46.7	SLE RA 2	0	200	10000	350	Variabile	Si
100	SLE RA 31	-0.011	200	10000	350	Variabile	Si
100	SLE RA 30	-0.011	200	10000	350	Variabile	Si
100	SLE RA 29	-0.009	200	10000	350	Variabile	Si
100	SLE RA 28	-0.009	200	10000	350	Variabile	Si

Superelemento in acciaio composto dall'asta 235

Caratteristiche del materiale

Acciaio: S275, fyk = 2750

Caratteristiche geometriche

Lunghezza: 100
Nodo iniziale: 29 Nodo finale: 28
Cerniera iniziale: Svincolo: M2, M3 Cerniera finale: No
Sovraresistenza: 0% Sisma Z: No

Caratteristiche della sezione

Sezione	Rotazione	Area	Jx	Jy	ix	iy	Wx	Wy	Wplx	Wply
HEA160	0	38.82	1674.7	615.62	6.57	3.98	220.36	76.95	245.43	117.67

Verifiche di resistenza

Verifiche a forza assiale §4.2.4.1.2.1 - §4.2.4.1.2.2 NTC18

X	Comb.	Sfruttamento	Classe	NEd	Nc,Rd	Nt,Rd	Riduzione da taglio	ρx	ρy	Verifica
46.7	SLU 98	0.022		2224.5		101662.9	1	0	0	Si

Verifiche a forza assiale SLD §4.2.4.1.2.1 - §4.2.4.1.2.2 NTC18

X	Comb.	Sfruttamento	Classe	NEd	Nc,Rd	Nt,Rd	Riduzione da taglio	ρx	ρy	Verifica
93.3	SLD 10	0.012		1253.4		101662.9	1	0	0	Si

Verifica a taglio Y §4.2.4.1.2.4 NTC18

X	Comb.	Sfruttamento	VEd	Vc,Rd	Av	Interazione taglio-torsione	Riduzione torsione	Verifica
0	SLU 98	0.014	276.3	20045.7	13.26	Considerata	1	Si

Verifica a taglio Y SLD §4.2.4.1.2.4 NTC18

X	Comb.	Sfruttamento	VEd	Vc,Rd	Av	Interazione taglio-torsione	Riduzione torsione	Verifica
0	SLD 16	0.002	30.5	20045.7	13.26	Considerata	1	Si

Verifica a presso/tenso flessione retta X §§ 4.2.4.1.2.3 - 4.2.4.1.2.6 - 4.2.4.1.2.7 - 4.2.4.1.2.8 NTC18

Verifiche eseguite utilizzando la formula conservativa (6.2) §6.2.1 EN 1993-1-1:2005.

X	Comb.	Sfruttamento	Classe	NEd	NRd	Rid. NRd da VEd	Mx,Ed	Mx,Rd	Rid. Mx,Rd da VEd	Rid. Mx,Rd da NEd	ρx	ρy	Verifica
100	SLU 131	0.045	1	2224.5	101662.9	1	-14779	642783	1		0	0	Si

Verifica a presso/tenso flessione retta X SLD §§ 4.2.4.1.2.3 - 4.2.4.1.2.6 - 4.2.4.1.2.7 - 4.2.4.1.2.8 NTC18

Verifiche eseguite utilizzando la formula conservativa (6.2) §6.2.1 EN 1993-1-1:2005.

X	Comb.	Sfruttamento	Classe	NEd	NRd	Rid. NRd da VEd	Mx,Ed	Mx,Rd	Rid. Mx,Rd da VEd	Rid. Mx,Rd da NEd	ρx	ρy	Verifica
100	SLD 10	0.015	1	1253.4	101662.9	1	-1524	642783	1		0	0	Si

Verifica a presso/tenso flessione deviata §§ 4.2.4.1.2.3 - 4.2.4.1.2.6 - 4.2.4.1.2.7 - 4.2.4.1.2.8 NTC18

Verifiche eseguite utilizzando la formula conservativa (6.2) §6.2.1 EN 1993-1-1:2005.

X	Comb.	Sfruttamento	Classe	NEd	NRd	Rid. NRd da VEd	Mx,Ed	Mx,Rd	My,Ed	My,Rd	Rid. Mx,Rd da VEd	Rid. Mx,Rd da NEd	Rid. My,Rd da VEd	Rid. My,Rd da NEd	α	β	ρx	ρy	Verifica
100	SLV 14	0.015	1	1252.8	101662.9	1	-1524	642783	231	308186	1		1				0	0	Si

Verifica a presso/tenso flessione deviata SLD §§ 4.2.4.1.2.3 - 4.2.4.1.2.6 - 4.2.4.1.2.7 - 4.2.4.1.2.8 NTC18

Verifiche eseguite utilizzando la formula conservativa (6.2) §6.2.1 EN 1993-1-1:2005.

X	Comb.	Sfruttamento	Classe	NEd	NRd	Rid. NRd da VEd	Mx,Ed	Mx,Rd	My,Ed	My,Rd	Rid. Mx,Rd da VEd	Rid. Mx,Rd da NEd	Rid. My,Rd da VEd	Rid. My,Rd da NEd	α	β	ρx	ρy	Verifica
100	SLD 13	0.015	1	1222.8	101662.9	1	-1524	642783	104	308186	1		1				0	0	Si

Verifiche ad instabilità

Caratteristiche iniziali

Membratura principale per controllo snellezza; Calcolo di snellezze ed N critici condotti secondo gli assi principali;
Curva X: b; Curva Y: c; Svergolamento: Carico all'estradosso; Curva svergolamento: b;

Dati per instabilità attorno a x

Numero rit.	Presente	Ascissa	Campata	βx/m	Vincolo a entrambi estremi	λx/m	λVer
1	Si	0					
			1-2	1	Si	15.2	Si, (<200)
2	Si	100					

Dati per instabilità attorno a y

Numero rit.	Presente	Ascissa	Campata	βy/n	k,LT	kw,LT	Vincolo a entrambi estremi	λy/n	λVer
1	Si	0							
			1-2	1	1	1	Si	25.1	Si, (<200)
2	Si	100							

Verifica a svergolamento con trazione §4.2.4.1.3.2 NTC18 - §5.5.3 ENV 1993-1-1:1994

X	Comb.	Sfruttamento	Classe	Obblig.	NEd	Mx,Ed	Mx,Eff,Ed	Mb,Rd,x	χ,LT	λ adim. LT	L,LT	M,critico	Verifica
100	SLU 31	0.011	1	Si	1863.5	-14321.7	-6916.5	642783.4	1	0.193	100	18039334.6	Si

Verifica di stabilità a taglio anima Y §4.2.4.1.2.4 [4.2.27] NTC18

η	hw	tw	hw/tw max	Verifica
1.2	13.4	0.6	55.46	Si

Verifica di stabilità a taglio anima Y SLD §4.2.4.1.2.4 [4.2.27] NTC18

η	hw	tw	hw/tw max	Verifica
1.2	13.4	0.6	55.46	Si

Verifiche a deformabilità

Mensola X: No; Mensola Y: No.

Frecce lungo X

Ascissa freccia	Combinazione	Freccia	Luce	L/f	L/f,min	Tipo	Verifica
10	SLE RA 1	0	100	10000	250	Totale	Si
10	SLE RA 31	0	100	10000	250	Totale	Si
10	SLE RA 30	0	100	10000	250	Totale	Si

Ascissa freccia	Combinazione	Freccia	Luce	L/f	L/f,min	Tipo	Verifica
23.3	SLE RA 29	0	100	10000	250	Totale	Si
3.3	SLE RA 28	0	100	10000	250	Totale	Si
6.7	SLE RA 2	0	100	10000	350	Variabile	Si
93.3	SLE RA 31	0	100	10000	350	Variabile	Si
93.3	SLE RA 30	0	100	10000	350	Variabile	Si
93.3	SLE RA 29	0	100	10000	350	Variabile	Si
93.3	SLE RA 28	0	100	10000	350	Variabile	Si

Frecce lungo Y

Ascissa freccia	Combinazione	Freccia	Luce	L/f	L/f,min	Tipo	Verifica
53.3	SLE RA 1	0	100	10000	250	Totale	Si
56.7	SLE RA 31	-0.003	100	10000	250	Totale	Si
56.7	SLE RA 30	-0.003	100	10000	250	Totale	Si
56.7	SLE RA 29	-0.002	100	10000	250	Totale	Si
56.7	SLE RA 28	-0.002	100	10000	250	Totale	Si
63.3	SLE RA 2	0	100	10000	350	Variabile	Si
56.7	SLE RA 31	-0.002	100	10000	350	Variabile	Si
56.7	SLE RA 30	-0.002	100	10000	350	Variabile	Si
56.7	SLE RA 29	-0.002	100	10000	350	Variabile	Si
56.7	SLE RA 28	-0.002	100	10000	350	Variabile	Si

Superelemento in acciaio composto dall'asta 236

Caratteristiche del materiale

Acciaio: S275, fyk = 2750

Caratteristiche geometriche

Lunghezza: 196.8
Nodo iniziale: 39 Nodo finale: 116
Cerniera iniziale: No Cerniera finale: No
Sovraresistenza: 0% Sisma Z: No

Caratteristiche della sezione

Sezione	Rotazione	Area	Jx	Jy	ix	iy	Wx	Wy	Wplx	Wply
HEA160	0	38.82	1674.7	615.62	6.57	3.98	220.36	76.95	245.43	117.67

Verifiche di resistenza

Verifiche a forza assiale §4.2.4.1.2.1 - §4.2.4.1.2.2 NTC18

X	Comb.	Sfruttamento	Classe	NEd	Nc,Rd	Nt,Rd	Riduzione da taglio	ρx	ρy	Verifica
0	SLU 118	0.245	1	-24949.6	101662.9		1	0	0	Si

Verifiche a forza assiale SLD §4.2.4.1.2.1 - §4.2.4.1.2.2 NTC18

X	Comb.	Sfruttamento	Classe	NEd	Nc,Rd	Nt,Rd	Riduzione da taglio	ρx	ρy	Verifica
0	SLD 14	0.056	1	-5732.7	101662.9		1	0	0	Si

Verifica a taglio X §4.2.4.1.2.4 NTC18

X	Comb.	Sfruttamento	VEd	Vc,Rd	Av	Interazione taglio-torsione	Riduzione torsione	Verifica
0	SLV 9	0.001	-53.1	46333.5	30.78	Considerata	1	Si

Verifica a taglio Y §4.2.4.1.2.4 NTC18

X	Comb.	Sfruttamento	VEd	Vc,Rd	Av	Interazione taglio-torsione	Riduzione torsione	Verifica
0	SLU 118	0.021	420.8	20045.7	13.26	Considerata	1	Si

Verifica a taglio Y SLD §4.2.4.1.2.4 NTC18

X	Comb.	Sfruttamento	VEd	Vc,Rd	Av	Interazione taglio-torsione	Riduzione torsione	Verifica
0	SLD 13	0.004	73	20035.7	13.26	Considerata	1	Si

Verifica a torsione §4.2.4.1.2.5 NTC18

X	Comb.	Sfruttamento torsione	TEd	TRd	Riduzione taglio resistente	Sfruttamento taglio-torsione	τEd,totale	τRd	Verifica
91.8	SLV 12	0.011	160.9	14685.6	Considerata				Si

Verifica a torsione SLD §4.2.4.1.2.5 NTC18

X	Comb.	Sfruttamento torsione	TEd	TRd	Riduzione taglio resistente	Sfruttamento taglio-torsione	τEd,totale	τRd	Verifica
91.8	SLD 12	0.004	61	14685.6	Considerata				Si

Verifica a presso/tenso flessione retta X §§ 4.2.4.1.2.3 - 4.2.4.1.2.6 - 4.2.4.1.2.7 - 4.2.4.1.2.8 NTC18

Verifiche eseguite utilizzando la formula conservativa (6.2) §6.2.1 EN 1993-1-1:2005.

X	Comb.	Sfruttamento	Classe	NEd	NRd	Rid. NRd da VEd	Mx,Ed	Mx,Rd	Rid. Mx,Rd da VEd	Rid. Mx,Rd da NEd	ρx	ρy	Verifica
196.8	SLU 118	0.323	1	-24910	101662.9	1	-49901	642783	1		0	0	Si

Verifica a presso/tenso flessione retta Y §§ 4.2.4.1.2.3 - 4.2.4.1.2.6 - 4.2.4.1.2.7 - 4.2.4.1.2.8 NTC18

Verifiche eseguite utilizzando la formula conservativa (6.2) §6.2.1 EN 1993-1-1:2005.

X	Comb.	Sfruttamento	Classe	NEd	NRd	Rid. NRd da VEd	My,Ed	My,Rd	Rid. My,Rd da VEd	Rid. My,Rd da NEd	ρx	ρy	Verifica
45.9	SLV 12	0.091	1	-5304.4	101662.9	1	12072	308186	1		0	0	Si

Verifica a presso/tenso flessione retta Y SLD §§ 4.2.4.1.2.3 - 4.2.4.1.2.6 - 4.2.4.1.2.7 - 4.2.4.1.2.8 NTC18

Verifiche eseguite utilizzando la formula conservativa (6.2) §6.2.1 EN 1993-1-1:2005.

X	Comb.	Sfruttamento	Classe	NEd	NRd	Rid. NRd da VEd	My,Ed	My,Rd	Rid. My,Rd da VEd	Rid. My,Rd da NEd	ρx	ρy	Verifica
39.4	SLD 11	0.063	1	-4892.8	101662.9	1	4446	308186	1		0	0	Si

Verifica a presso/tenso flessione deviata §§ 4.2.4.1.2.3 - 4.2.4.1.2.6 - 4.2.4.1.2.7 - 4.2.4.1.2.8 NTC18

Verifiche eseguite utilizzando la formula conservativa (6.2) §6.2.1 EN 1993-1-1:2005.

X	Comb.	Sfruttamento	Classe	NEd	NRd	Rid. NRd da VEd	Mx,Ed	Mx,Rd	My,Ed	My,Rd	Rid. Mx,Rd da VEd	Rid. Mx,Rd da NEd	Rid. My,Rd da VEd	Rid. My,Rd da NEd	α	β	ρx	ρy	Verifica
196.8	SLV 10	0.126	1	-5281.1	101662.9	1	-5756	642783	-20076	308186	1		1				0	0	Si

Verifica a presso/tenso flessione deviata SLD §§ 4.2.4.1.2.3 - 4.2.4.1.2.6 - 4.2.4.1.2.7 - 4.2.4.1.2.8 NTC18

Verifiche eseguite utilizzando la formula conservativa (6.2) §6.2.1 EN 1993-1-1:2005.

X	Comb.	Sfruttamento	Classe	NEd	NRd	Rid. NRd da VEd	Mx,Ed	Mx,Rd	My,Ed	My,Rd	Rid. Mx,Rd da VEd	Rid. Mx,Rd da NEd	Rid. My,Rd da VEd	Rid. My,Rd da NEd	α	β	ρx	ρy	Verifica
196.8	SLD 9	0.081	1	-4868.5	101662.9	1	-5425	642783	-7614	308186	1		1				0	0	Si

Verifiche ad instabilità

Caratteristiche iniziali

Membratura principale per controllo snellezza; Calcolo di snellezze ed N critici condotti secondo gli assi principali;
Curva X: b; Curva Y: c; Svergolamento: Carico all'estradosso; Curva svergolamento: b;

Dati per instabilità attorno a x

Numero rit.	Presente	Ascissa	Campata	βx/m	Vincolo a entrambi estremi	λx/m	λVer
1	Si	0					
			1-2	1	Si	30	Si, (<200)
2	Si	196.8					

Dati per instabilità attorno a y

Numero rit.	Presente	Ascissa	Campata	βy/n	k,LT	kw,LT	Vincolo a entrambi estremi	λy/n	λVer
1	Si	0							
			1-2	1	1	1	Si	49.4	Si, (<200)
2	Si	196.8							

Verifica di stabilità per pressoflessione §C.4.2.4.1.3.3.2 NTC18

X	Comb.	Sfruttamento	Classe	NEd	NRk	Mx,Ed max	Mx,Rk	My,Ed max	My,Rk	χ,x	χ,y	kxx	kxy	kyx	kyy	χ,LT	Verifica
0	SLU 85	0.38	1	-24949.6	106746.1	49900.9	674922.6	4.5	323595.1	0.947	0.803	0.431	0.279	0.895	0.466	0.934	Si

Verifica di stabilità per pressoflessione SLD §C.4.2.4.1.3.3.2 NTC18

X	Comb.	Sfruttamento	Classe	NEd	NRk	Mx,Ed max	Mx,Rk	My,Ed max	My,Rk	χ,x	χ,y	kxx	kxy	kyx	kyy	χ,LT	Verifica
0	SLD 9	0.089	1	-4898.9	106746.1	5424.9	674922.6	7613.7	323595.1	0.947	0.803	0.629	0.49	0.991	0.817	0.934	Si

Verifica di stabilità a taglio anima Y §4.2.4.1.2.4 [4.2.27] NTC18

η	hw	tw	hw/tw max	Verifica
1.2	13.4	0.6	55.46	Si

Verifica di stabilità a taglio anima Y SLD §4.2.4.1.2.4 [4.2.27] NTC18

η	hw	tw	hw/tw max	Verifica
1.2	13.4	0.6	55.46	Si

Verifiche a deformabilità

Mensola X: No; Mensola Y: No.

Frecce lungo X

Ascissa freccia	Combinazione	Freccia	Luce	L/f	L/f,min	Tipo	Verifica
124.6	SLE RA 1	0	196.8	10000	250	Totale	Si
131.2	SLE RA 31	0	196.8	10000	250	Totale	Si
131.2	SLE RA 30	0	196.8	10000	250	Totale	Si
131.2	SLE RA 29	0	196.8	10000	250	Totale	Si
131.2	SLE RA 28	0	196.8	10000	250	Totale	Si
91.8	SLE RA 2	0	196.8	10000	350	Variabile	Si
78.7	SLE RA 31	0	196.8	10000	350	Variabile	Si
45.9	SLE RA 30	0	196.8	10000	350	Variabile	Si
78.7	SLE RA 29	0	196.8	10000	350	Variabile	Si
52.5	SLE RA 28	0	196.8	10000	350	Variabile	Si

Frecce lungo Y

Ascissa freccia	Combinazione	Freccia	Luce	L/f	L/f,min	Tipo	Verifica
118.1	SLE RA 1	-0.004	196.8	10000	250	Totale	Si
131.2	SLE RA 31	-0.012	196.8	10000	250	Totale	Si
118.1	SLE RA 30	-0.004	196.8	10000	250	Totale	Si
131.2	SLE RA 29	-0.012	196.8	10000	250	Totale	Si
118.1	SLE RA 28	-0.004	196.8	10000	250	Totale	Si
131.2	SLE RA 2	-0.011	196.8	10000	350	Variabile	Si
131.2	SLE RA 31	-0.008	196.8	10000	350	Variabile	Si
124.6	SLE RA 30	0	196.8	10000	350	Variabile	Si
131.2	SLE RA 29	-0.008	196.8	10000	350	Variabile	Si
118.1	SLE RA 28	0	196.8	10000	350	Variabile	Si

Superelemento in acciaio composto dall'asta 237

Caratteristiche del materiale

Acciaio: S275, fyk = 2750

Caratteristiche geometriche

Lunghezza: 196.8
Nodo iniziale: 38 Nodo finale: 116
Cerniera iniziale: No Cerniera finale: No
Sovraresistenza: 0% Sisma Z: No

Caratteristiche della sezione

Sezione	Rotazione	Area	Jx	Jy	ix	iy	Wx	Wy	Wplx	Wply
HEA160	0	38.82	1674.7	615.62	6.57	3.98	220.36	76.95	245.43	117.67

Verifiche di resistenza

Verifiche a forza assiale §4.2.4.1.2.1 - §4.2.4.1.2.2 NTC18

X	Comb.	Sfruttamento	Classe	NEd	Nc,Rd	Nt,Rd	Riduzione da taglio	ρx	ρy	Verifica
0	SLU 118	0.245	1	-24948.8	101662.9		1	0	0	Si

Verifiche a forza assiale SLD §4.2.4.1.2.1 - §4.2.4.1.2.2 NTC18

X	Comb.	Sfruttamento	Classe	NEd	Nc,Rd	Nt,Rd	Riduzione da taglio	ρx	ρy	Verifica
0	SLD 1	0.056	1	-5732.7	101662.9		1	0	0	Si

Verifica a taglio X §4.2.4.1.2.4 NTC18

X	Comb.	Sfruttamento	VEd	Vc,Rd	Av	Interazione taglio-torsione	Riduzione torsione	Verifica
0	SLV 5	0.001	53.1	46333.5	30.78	Considerata	1	Si

Verifica a taglio Y §4.2.4.1.2.4 NTC18

X	Comb.	Sfruttamento	VEd	Vc,Rd	Av	Interazione taglio-torsione	Riduzione torsione	Verifica
0	SLU 118	0.021	420.8	20045.7	13.26	Considerata	1	Si

Verifica a taglio Y SLD §4.2.4.1.2.4 NTC18

X	Comb.	Sfruttamento	VEd	Vc,Rd	Av	Interazione taglio-torsione	Riduzione torsione	Verifica
0	SLD 1	0.004	73	20035.7	13.26	Considerata	1	Si

Verifica a torsione §4.2.4.1.2.5 NTC18

X	Comb.	Sfruttamento torsione	TEd	TRd	Riduzione taglio resistente	Sfruttamento taglio-torsione	τEd,totale	τRd	Verifica
196.8	SLV 8	0.011	-160.9	14685.6	Considerata				Si

Verifica a torsione SLD §4.2.4.1.2.5 NTC18

X	Comb.	Sfruttamento torsione	TEd	TRd	Riduzione taglio resistente	Sfruttamento taglio-torsione	τEd,totale	τRd	Verifica
196.8	SLD 8	0.004	-61	14685.6	Considerata				Si

Verifica a presso/tenso flessione retta X §§ 4.2.4.1.2.3 - 4.2.4.1.2.6 - 4.2.4.1.2.7 - 4.2.4.1.2.8 NTC18

Verifiche eseguite utilizzando la formula conservativa (6.2) §6.2.1 EN 1993-1-1:2005.

X	Comb.	Sfruttamento	Classe	NEd	NRd	Rid. NRd da VEd	Mx,Ed	Mx,Rd	Rid. Mx,Rd da VEd	Rid. Mx,Rd da NEd	ρx	ρy	Verifica
196.8	SLU 118	0.323	1	-24909.2	101662.9	1	-49905	642783	1		0	0	Si

Verifica a presso/tenso flessione retta Y §§ 4.2.4.1.2.3 - 4.2.4.1.2.6 - 4.2.4.1.2.7 - 4.2.4.1.2.8 NTC18

Verifiche eseguite utilizzando la formula conservativa (6.2) §6.2.1 EN 1993-1-1:2005.

X	Comb.	Sfruttamento	Classe	NEd	NRd	Rid. NRd da VEd	My,Ed	My,Rd	Rid. My,Rd da VEd	Rid. My,Rd da NEd	ρx	ρy	Verifica
45.9	SLV 7	0.091	1	-5304.4	101662.9	1	-12072	308186	1		0	0	Si

Verifica a presso/tenso flessione retta Y SLD §§ 4.2.4.1.2.3 - 4.2.4.1.2.6 - 4.2.4.1.2.7 - 4.2.4.1.2.8 NTC18

Verifiche eseguite utilizzando la formula conservativa (6.2) §6.2.1 EN 1993-1-1:2005.

X	Comb.	Sfruttamento	Classe	NEd	NRd	Rid. NRd da VEd	My,Ed	My,Rd	Rid. My,Rd da VEd	Rid. My,Rd da NEd	ρx	ρy	Verifica
39.4	SLD 7	0.063	1	-4892.8	101662.9	1	-4446	308186	1		0	0	Si

Verifica a presso/tenso flessione deviata §§ 4.2.4.1.2.3 - 4.2.4.1.2.6 - 4.2.4.1.2.7 - 4.2.4.1.2.8 NTC18

Verifiche eseguite utilizzando la formula conservativa (6.2) §6.2.1 EN 1993-1-1:2005.

X	Comb.	Sfruttamento	Classe	NEd	NRd	Rid. NRd da VEd	Mx,Ed	Mx,Rd	My,Ed	My,Rd	Rid. Mx,Rd da VEd	Rid. Mx,Rd da NEd	Rid. My,Rd da VEd	Rid. My,Rd da NEd	α	β	ρx	ρy	Verifica
196.8	SLV 5	0.126	1	-5281.1	101662.9	1	-5756	642783	20076	308186	1		1				0	0	Si

Verifica a presso/tenso flessione deviata SLD §§ 4.2.4.1.2.3 - 4.2.4.1.2.6 - 4.2.4.1.2.7 - 4.2.4.1.2.8 NTC18

Verifiche eseguite utilizzando la formula conservativa (6.2) §6.2.1 EN 1993-1-1:2005.

X	Comb.	Sfruttamento	Classe	NEd	NRd	Rid. NRd da VEd	Mx,Ed	Mx,Rd	My,Ed	My,Rd	Rid. Mx,Rd da VEd	Rid. Mx,Rd da NEd	Rid. My,Rd da VEd	Rid. My,Rd da NEd	α	β	ρx	ρy	Verifica
196.8	SLD 6	0.081	1	-4868.5	101662.9	1	-5425	642783	7614	308186	1		1				0	0	Si

Verifiche ad instabilità

Caratteristiche iniziali

Membratura principale per controllo snellezza; Calcolo di snellezze ed N critici condotti secondo gli assi principali;
Curva X: b; Curva Y: c; Svergolamento: Carico all'estradosso; Curva svergolamento: b;

Dati per instabilità attorno a x

Numero rit.	Presente	Ascissa	Campata	βx/m	Vincolo a entrambi estremi	λx/m	λVer
1	Si	0					
			1-2	1	Si	30	Si, (<200)
2	Si	196.8					

Dati per instabilità attorno a y

Numero rit.	Presente	Ascissa	Campata	βy/n	k,LT	kw,LT	Vincolo a entrambi estremi	λy/n	λVer
1	Si	0							
			1-2	1	1	1	Si	49.4	Si, (<200)
2	Si	196.8							

Verifica di stabilità per pressoflessione §C.4.2.4.1.3.3.2 NTC18

X	Comb.	Sfruttamento	Classe	NEd	NRk	Mx,Ed max	Mx,Rk	My,Ed max	My,Rk	χ,x	χ,y	kxx	kxy	kyx	kyy	χ,LT	Verifica
0	SLU 85	0.38	1	-24948.8	106746.1	49905.4	674922.6	4.5	323595.1	0.947	0.803	0.431	0.279	0.895	0.466	0.934	Si

Verifica di stabilità per pressoflessione SLD §C.4.2.4.1.3.3.2 NTC18

X	Comb.	Sfruttamento	Classe	NEd	NRk	Mx,Ed max	Mx,Rk	My,Ed max	My,Rk	χ,x	χ,y	kxx	kxy	kyx	kyy	χ,LT	Verifica
0	SLD 5	0.089	1	-4898.9	106746.1	5424.9	674922.6	7613.7	323595.1	0.947	0.803	0.629	0.49	0.991	0.817	0.934	Si

Verifica di stabilità a taglio anima Y §4.2.4.1.2.4 [4.2.27] NTC18

η	hw	tw	hw/tw max	Verifica
1.2	13.4	0.6	55.46	Si

Verifica di stabilità a taglio anima Y SLD §4.2.4.1.2.4 [4.2.27] NTC18

η	hw	tw	hw/tw max	Verifica
1.2	13.4	0.6	55.46	Si

Verifiche a deformabilità

Mensola X: No; Mensola Y: No.

Frecce lungo X

Ascissa freccia	Combinazione	Freccia	Luce	L/f	L/f,min	Tipo	Verifica
124.6	SLE RA 1	0	196.8	10000	250	Totale	Si
131.2	SLE RA 31	0	196.8	10000	250	Totale	Si
124.6	SLE RA 30	0	196.8	10000	250	Totale	Si
131.2	SLE RA 29	0	196.8	10000	250	Totale	Si
124.6	SLE RA 28	0	196.8	10000	250	Totale	Si
91.8	SLE RA 2	0	196.8	10000	350	Variabile	Si
78.7	SLE RA 31	0	196.8	10000	350	Variabile	Si
150.9	SLE RA 30	0	196.8	10000	350	Variabile	Si
78.7	SLE RA 29	0	196.8	10000	350	Variabile	Si
150.9	SLE RA 28	0	196.8	10000	350	Variabile	Si

Frecce lungo Y

Ascissa freccia	Combinazione	Freccia	Luce	L/f	L/f,min	Tipo	Verifica
118.1	SLE RA 1	-0.004	196.8	10000	250	Totale	Si
131.2	SLE RA 31	-0.012	196.8	10000	250	Totale	Si
118.1	SLE RA 30	-0.005	196.8	10000	250	Totale	Si
131.2	SLE RA 29	-0.012	196.8	10000	250	Totale	Si
118.1	SLE RA 28	-0.004	196.8	10000	250	Totale	Si
131.2	SLE RA 2	-0.011	196.8	10000	350	Variabile	Si
131.2	SLE RA 31	-0.008	196.8	10000	350	Variabile	Si
124.6	SLE RA 30	0	196.8	10000	350	Variabile	Si
131.2	SLE RA 29	-0.008	196.8	10000	350	Variabile	Si
118.1	SLE RA 28	0	196.8	10000	350	Variabile	Si

Superelemento in acciaio composto dall'asta 238

Caratteristiche del materiale

Acciaio: S275, fyk = 2750

Caratteristiche geometriche

Lunghezza: 196.8
Nodo iniziale: 43 Nodo finale: 117
Cerniera iniziale: No Cerniera finale: No
Sovraresistenza: 0% Sisma Z: No

Caratteristiche della sezione

Sezione	Rotazione	Area	Jx	Jy	ix	iy	Wx	Wy	Wplx	Wply
HEA160	0	38.82	1674.7	615.62	6.57	3.98	220.36	76.95	245.43	117.67

Verifiche di resistenza

Verifiche a forza assiale §4.2.4.1.2.1 - §4.2.4.1.2.2 NTC18

X	Comb.	Sfruttamento	Classe	NEd	Nc,Rd	Nt,Rd	Riduzione da taglio	ρx	ρy	Verifica
0	SLU 118	0.427	1	-43409.2	101662.9		1	0	0	Si

Verifiche a forza assiale SLD §4.2.4.1.2.1 - §4.2.4.1.2.2 NTC18

X	Comb.	Sfruttamento	Classe	NEd	Nc,Rd	Nt,Rd	Riduzione da taglio	ρx	ρy	Verifica
0	SLD 16	0.057	1	-5762.5	101662.9		1	0	0	Si

Verifica a taglio X §4.2.4.1.2.4 NTC18

X	Comb.	Sfruttamento	VEd	Vc,Rd	Av	Interazione taglio-torsione	Riduzione torsione	Verifica
0	SLV 5	0.001	-52.8	46333.4	30.78	Considerata	1	Si

Verifica a taglio Y §4.2.4.1.2.4 NTC18

X	Comb.	Sfruttamento	VEd	Vc,Rd	Av	Interazione taglio-torsione	Riduzione torsione	Verifica
0	SLU 85	0.038	759.5	20045.7	13.26	Considerata	1	Si

Verifica a taglio Y SLD §4.2.4.1.2.4 NTC18

X	Comb.	Sfruttamento	VEd	Vc,Rd	Av	Interazione taglio-torsione	Riduzione torsione	Verifica
0	SLD 16	0.004	73.3	20035.7	13.26	Considerata	1	Si

Verifica a torsione §4.2.4.1.2.5 NTC18

X	Comb.	Sfruttamento torsione	TEd	TRd	Riduzione taglio resistente	Sfruttamento taglio-torsione	τEd,totale	τRd	Verifica
196.8	SLV 8	0.011	160.9	14685.6	Considerata				Si

Verifica a torsione SLD §4.2.4.1.2.5 NTC18

X	Comb.	Sfruttamento torsione	TEd	TRd	Riduzione taglio resistente	Sfruttamento taglio-torsione	τEd,totale	τRd	Verifica
196.8	SLD 8	0.004	61	14685.6	Considerata				Si

Verifica a presso/tenso flessione retta X §§ 4.2.4.1.2.3 - 4.2.4.1.2.6 - 4.2.4.1.2.7 - 4.2.4.1.2.8 NTC18

Verifiche eseguite utilizzando la formula conservativa (6.2) §6.2.1 EN 1993-1-1:2005.

X	Comb.	Sfruttamento	Classe	NEd	NRd	Rid. NRd da VEd	Mx,Ed	Mx,Rd	Rid. Mx,Rd da VEd	Rid. Mx,Rd da NEd	ρx	ρy	Verifica
196.8	SLU 85	0.571	1	-43369.6	101662.9	1	-92759	642783	1		0	0	Si

Verifica a presso/tenso flessione retta Y §§ 4.2.4.1.2.3 - 4.2.4.1.2.6 - 4.2.4.1.2.7 - 4.2.4.1.2.8 NTC18

Verifiche eseguite utilizzando la formula conservativa (6.2) §6.2.1 EN 1993-1-1:2005.

X	Comb.	Sfruttamento	Classe	NEd	NRd	Rid. NRd da VEd	My,Ed	My,Rd	Rid. My,Rd da VEd	Rid. My,Rd da NEd	ρx	ρy	Verifica
45.9	SLV 9	0.092	1	-5332.4	101662.9	1	-12057	308186	1		0	0	Si

Verifica a presso/tenso flessione retta Y SLD §§ 4.2.4.1.2.3 - 4.2.4.1.2.6 - 4.2.4.1.2.7 - 4.2.4.1.2.8 NTC18

Verifiche eseguite utilizzando la formula conservativa (6.2) §6.2.1 EN 1993-1-1:2005.

X	Comb.	Sfruttamento	Classe	NEd	NRd	Rid. NRd da VEd	My,Ed	My,Rd	Rid. My,Rd da VEd	Rid. My,Rd da NEd	ρx	ρy	Verifica
39.4	SLD 9	0.063	1	-4918.9	101662.9	1	-4440	308186	1		0	0	Si

Verifica a presso/tenso flessione deviata §§ 4.2.4.1.2.3 - 4.2.4.1.2.6 - 4.2.4.1.2.7 - 4.2.4.1.2.8 NTC18

Verifiche eseguite utilizzando la formula conservativa (6.2) §6.2.1 EN 1993-1-1:2005.

X	Comb.	Sfruttamento	Classe	NEd	NRd	Rid. NRd da VEd	Mx,Ed	Mx,Rd	My,Ed	My,Rd	Rid. Mx,Rd da VEd	Rid. Mx,Rd da NEd	Rid. My,Rd da VEd	Rid. My,Rd da NEd	α	β	ρx	ρy	Verifica
196.8	SLV 10	0.126	1	-5309	101662.9	1	-5795	642783	-20024	308186	1		1				0	0	Si

Verifica a presso/tenso flessione deviata SLD §§ 4.2.4.1.2.3 - 4.2.4.1.2.6 - 4.2.4.1.2.7 - 4.2.4.1.2.8 NTC18

Verifiche eseguite utilizzando la formula conservativa (6.2) §6.2.1 EN 1993-1-1:2005.

X	Comb.	Sfruttamento	Classe	NEd	NRd	Rid. NRd da VEd	Mx,Ed	Mx,Rd	My,Ed	My,Rd	Rid. Mx,Rd da VEd	Rid. Mx,Rd da NEd	Rid. My,Rd da VEd	Rid. My,Rd da NEd	α	β	ρx	ρy	Verifica
196.8	SLD 9	0.081	1	-4894.5	101662.9	1	-5463	642783	-7593	308186	1		1				0	0	Si

Verifiche ad instabilità

Caratteristiche iniziali

Membratura principale per controllo snellezza; Calcolo di snellezze ed N critici condotti secondo gli assi principali;
Curva X: b; Curva Y: c; Svergolamento: Carico all'estradosso; Curva svergolamento: b;

Dati per instabilità attorno a x

Numero rit.	Presente	Ascissa	Campata	βx/m	Vincolo a entrambi estremi	λx/m	λVer
1	Si	0					
			1-2	1	Si	30	Si, (<200)
2	Si	196.8					

Dati per instabilità attorno a y

Numero rit.	Presente	Ascissa	Campata	βy/n	k,LT	kw,LT	Vincolo a entrambi estremi	λy/n	λVer
1	Si	0							
			1-2	1	1	1	Si	49.4	Si, (<200)
2	Si	196.8							

Verifica di stabilità per pressoflessione §C.4.2.4.1.3.3.2 NTC18

X	Comb.	Sfruttamento	Classe	NEd	NRk	Mx,Ed max	Mx,Rk	My,Ed max	My,Rk	χ,x	χ,y	kxx	kxy	kyx	kyy	χ,LT	Verifica
0	SLU 85	0.655	1	-43409.2	106746.1	92759.1	674922.6	1.7	323595.1	0.947	0.803	0.426	0.333	0.798	0.554	0.934	Si

Verifica di stabilità per pressoflessione SLD §C.4.2.4.1.3.3.2 NTC18

X	Comb.	Sfruttamento	Classe	NEd	NRk	Mx,Ed max	Mx,Rk	My,Ed max	My,Rk	χ,x	χ,y	kxx	kxy	kyx	kyy	χ,LT	Verifica
0	SLD 9	0.089	1	-4924.9	106746.1	5462.8	674922.6	7593	323595.1	0.947	0.803	0.628	0.491	0.991	0.818	0.934	Si

Verifica di stabilità a taglio anima Y §4.2.4.1.2.4 [4.2.27] NTC18

η	hw	tw	hw/tw max	Verifica
1.2	13.4	0.6	55.46	Si

Verifica di stabilità a taglio anima Y SLD §4.2.4.1.2.4 [4.2.27] NTC18

η	hw	tw	hw/tw max	Verifica
1.2	13.4	0.6	55.46	Si

Verifiche a deformabilità

Mensola X: No; Mensola Y: No.

Frecce lungo X

Ascissa freccia	Combinazione	Freccia	Luce	L/f	L/f,min	Tipo	Verifica
118.1	SLE RA 1	0	196.8	10000	250	Totale	Si
118.1	SLE RA 31	0	196.8	10000	250	Totale	Si
111.5	SLE RA 30	0	196.8	10000	250	Totale	Si
118.1	SLE RA 29	0	196.8	10000	250	Totale	Si
111.5	SLE RA 28	0	196.8	10000	250	Totale	Si
91.8	SLE RA 2	0	196.8	10000	350	Variabile	Si
124.6	SLE RA 31	0	196.8	10000	350	Variabile	Si
65.6	SLE RA 30	0	196.8	10000	350	Variabile	Si
124.6	SLE RA 29	0	196.8	10000	350	Variabile	Si
59	SLE RA 28	0	196.8	10000	350	Variabile	Si

Frecce lungo Y

Ascissa freccia	Combinazione	Freccia	Luce	L/f	L/f,min	Tipo	Verifica
131.2	SLE RA 19	-0.026	196.8	7675.5	250	Totale	Si
131.2	SLE RA 18	-0.026	196.8	7675.5	250	Totale	Si
131.2	SLE RA 7	-0.025	196.8	7720.6	250	Totale	Si
131.2	SLE RA 6	-0.025	196.8	7720.6	250	Totale	Si
131.2	SLE RA 15	-0.025	196.8	7748.9	250	Totale	Si
131.2	SLE RA 19	-0.022	196.8	9080.5	350	Variabile	Si
131.2	SLE RA 18	-0.022	196.8	9080.5	350	Variabile	Si
131.2	SLE RA 7	-0.022	196.8	9143.7	350	Variabile	Si
131.2	SLE RA 6	-0.022	196.8	9143.7	350	Variabile	Si
131.2	SLE RA 15	-0.021	196.8	9183.4	350	Variabile	Si

Superelemento in acciaio composto dall'asta 239

Caratteristiche del materiale

Acciaio: S275, fyk = 2750

Caratteristiche geometriche

Lunghezza: 196.8
Nodo iniziale: 42 Nodo finale: 117
Cerniera iniziale: No Cerniera finale: No
Sovraresistenza: 0% Sisma Z: No

Caratteristiche della sezione

Sezione	Rotazione	Area	Jx	Jy	ix	iy	Wx	Wy	Wplx	Wply
HEA160	0	38.82	1674.7	615.62	6.57	3.98	220.36	76.95	245.43	117.67

Verifiche di resistenza

Verifiche a forza assiale §4.2.4.1.2.1 - §4.2.4.1.2.2 NTC18

X	Comb.	Sfruttamento	Classe	NEd	Nc,Rd	Nt,Rd	Riduzione da taglio	ρx	ρy	Verifica
0	SLU 118	0.429	1	-43574.3	101662.9		1	0	0	Si

Verifiche a forza assiale SLD §4.2.4.1.2.1 - §4.2.4.1.2.2 NTC18

X	Comb.	Sfruttamento	Classe	NEd	Nc,Rd	Nt,Rd	Riduzione da taglio	ρx	ρy	Verifica
0	SLD 3	0.057	1	-5762.5	101662.9		1	0	0	Si

Verifica a taglio X §4.2.4.1.2.4 NTC18

X	Comb.	Sfruttamento	VEd	Vc,Rd	Av	Interazione taglio-torsione	Riduzione torsione	Verifica
0	SLV 9	0.001	52.8	46333.4	30.78	Considerata	1	Si

Verifica a taglio Y §4.2.4.1.2.4 NTC18

X	Comb.	Sfruttamento	VEd	Vc,Rd	Av	Interazione taglio-torsione	Riduzione torsione	Verifica
0	SLU 73	0.038	755.7	20045.7	13.26	Considerata	1	Si

Verifica a taglio Y SLD §4.2.4.1.2.4 NTC18

X	Comb.	Sfruttamento	VEd	Vc,Rd	Av	Interazione taglio-torsione	Riduzione torsione	Verifica
0	SLD 3	0.004	73.3	20035.7	13.26	Considerata	1	Si

Verifica a torsione §4.2.4.1.2.5 NTC18

X	Comb.	Sfruttamento torsione	TEd	TRd	Riduzione taglio resistente	Sfruttamento taglio-torsione	τEd,totale	τRd	Verifica
91.8	SLV 12	0.011	-160.9	14685.6	Considerata				Si

Verifica a torsione SLD §4.2.4.1.2.5 NTC18

X	Comb.	Sfruttamento torsione	TEd	TRd	Riduzione taglio resistente	Sfruttamento taglio-torsione	τEd,totale	τRd	Verifica
91.8	SLD 12	0.004	-61	14685.6	Considerata				Si

Verifica a presso/tenso flessione retta X §§ 4.2.4.1.2.3 - 4.2.4.1.2.6 - 4.2.4.1.2.7 - 4.2.4.1.2.8 NTC18

Verifiche eseguite utilizzando la formula conservativa (6.2) §6.2.1 EN 1993-1-1:2005.

X	Comb.	Sfruttamento	Classe	NEd	NRd	Rid. NRd da VEd	Mx,Ed	Mx,Rd	Rid. Mx,Rd da VEd	Rid. Mx,Rd da NEd	ρx	ρy	Verifica
196.8	SLU 118	0.571	1	-43534.7	101662.9	1	-91833	642783	1		0	0	Si

Verifica a presso/tenso flessione retta Y §§ 4.2.4.1.2.3 - 4.2.4.1.2.6 - 4.2.4.1.2.7 - 4.2.4.1.2.8 NTC18

Verifiche eseguite utilizzando la formula conservativa (6.2) §6.2.1 EN 1993-1-1:2005.

X	Comb.	Sfruttamento	Classe	NEd	NRd	Rid. NRd da VEd	My,Ed	My,Rd	Rid. My,Rd da VEd	Rid. My,Rd da NEd	ρx	ρy	Verifica
45.9	SLV 5	0.092	1	-5332.4	101662.9	1	12057	308186	1		0	0	Si

Verifica a presso/tenso flessione retta Y SLD §§ 4.2.4.1.2.3 - 4.2.4.1.2.6 - 4.2.4.1.2.7 - 4.2.4.1.2.8 NTC18

Verifiche eseguite utilizzando la formula conservativa (6.2) §6.2.1 EN 1993-1-1:2005.

X	Comb.	Sfruttamento	Classe	NEd	NRd	Rid. NRd da VEd	My,Ed	My,Rd	Rid. My,Rd da VEd	Rid. My,Rd da NEd	ρx	ρy	Verifica
39.4	SLD 5	0.063	1	-4918.9	101662.9	1	4440	308186	1		0	0	Si

Verifica a presso/tenso flessione deviata §§ 4.2.4.1.2.3 - 4.2.4.1.2.6 - 4.2.4.1.2.7 - 4.2.4.1.2.8 NTC18

Verifiche eseguite utilizzando la formula conservativa (6.2) §6.2.1 EN 1993-1-1:2005.

X	Comb.	Sfruttamento	Classe	NEd	NRd	Rid. NRd da VEd	Mx,Ed	Mx,Rd	My,Ed	My,Rd	Rid. Mx,Rd da VEd	Rid. Mx,Rd da NEd	Rid. My,Rd da VEd	Rid. My,Rd da NEd	α	β	ρx	ρy	Verifica
196.8	SLV 6	0.126	1	-5309	101662.9	1	-5795	642783	20024	308186	1		1				0	0	Si

Verifica a presso/tenso flessione deviata SLD §§ 4.2.4.1.2.3 - 4.2.4.1.2.6 - 4.2.4.1.2.7 - 4.2.4.1.2.8 NTC18

Verifiche eseguite utilizzando la formula conservativa (6.2) §6.2.1 EN 1993-1-1:2005.

X	Comb.	Sfruttamento	Classe	NEd	NRd	Rid. NRd da VEd	Mx,Ed	Mx,Rd	My,Ed	My,Rd	Rid. Mx,Rd da VEd	Rid. Mx,Rd da NEd	Rid. My,Rd da VEd	Rid. My,Rd da NEd	α	β	ρx	ρy	Verifica
196.8	SLD 6	0.081	1	-4894.5	101662.9	1	-5463	642783	7593	308186	1		1				0	0	Si

Verifiche ad instabilità

Caratteristiche iniziali

Membratura principale per controllo snellezza; Calcolo di snellezze ed N critici condotti secondo gli assi principali;
Curva X: b; Curva Y: c; Svergolamento: Carico all'estradosso; Curva svergolamento: b;

Dati per instabilità attorno a x

Numero rit.	Presente	Ascissa	Campata	βx/m	Vincolo a entrambi estremi	λx/m	λVer
1	Si	0					
			1-2	1	Si	30	Si, (<200)
2	Si	196.8					

Dati per instabilità attorno a y

Numero rit.	Presente	Ascissa	Campata	βy/n	k,LT	kw,LT	Vincolo a entrambi estremi	λy/n	λVer
1	Si	0							
			1-2	1	1	1	Si	49.4	Si, (<200)
2	Si	196.8							

Verifica di stabilità per pressoflessione §C.4.2.4.1.3.3.2 NTC18

X	Comb.	Sfruttamento	Classe	NEd	NRk	Mx,Ed max	Mx,Rk	My,Ed max	My,Rk	χ,x	χ,y	kxx	kxy	kyx	kyy	χ,LT	Verifica
0	SLU 85	0.656	1	-43574.3	106746.1	91833.1	674922.6	1.8	323595.1	0.947	0.803	0.426	0.336	0.798	0.561	0.934	Si

Verifica di stabilità per pressoflessione SLD §C.4.2.4.1.3.3.2 NTC18

X	Comb.	Sfruttamento	Classe	NEd	NRk	Mx,Ed max	Mx,Rk	My,Ed max	My,Rk	χ,x	χ,y	kxx	kxy	kyx	kyy	χ,LT	Verifica
0	SLD 5	0.089	1	-4924.9	106746.1	5462.8	674922.6	7593	323595.1	0.947	0.803	0.628	0.491	0.991	0.818	0.934	Si

Verifica di stabilità a taglio anima Y §4.2.4.1.2.4 [4.2.27] NTC18

η	hw	tw	hw/tw max	Verifica
1.2	13.4	0.6	55.46	Si

Verifica di stabilità a taglio anima Y SLD §4.2.4.1.2.4 [4.2.27] NTC18

η	hw	tw	hw/tw max	Verifica
1.2	13.4	0.6	55.46	Si

Verifiche a deformabilità

Mensola X: No; Mensola Y: No.

Frecce lungo X

Ascissa freccia	Combinazione	Freccia	Luce	L/f	L/f,min	Tipo	Verifica
118.1	SLE RA 1	0	196.8	10000	250	Totale	Si
118.1	SLE RA 31	0	196.8	10000	250	Totale	Si
111.5	SLE RA 30	0	196.8	10000	250	Totale	Si
118.1	SLE RA 29	0	196.8	10000	250	Totale	Si
111.5	SLE RA 28	0	196.8	10000	250	Totale	Si
91.8	SLE RA 2	0	196.8	10000	350	Variabile	Si
124.6	SLE RA 31	0	196.8	10000	350	Variabile	Si

Ascissa freccia	Combinazione	Freccia	Luce	L/f	L/f,min	Tipo	Verifica
65.6	SLE RA 30	0	196.8	10000	350	Variabile	Si
124.6	SLE RA 29	0	196.8	10000	350	Variabile	Si
65.6	SLE RA 28	0	196.8	10000	350	Variabile	Si

Frecce lungo Y

Ascissa freccia	Combinazione	Freccia	Luce	L/f	L/f,min	Tipo	Verifica
131.2	SLE RA 7	-0.025	196.8	7758.8	250	Totale	Si
131.2	SLE RA 6	-0.025	196.8	7758.8	250	Totale	Si
131.2	SLE RA 19	-0.025	196.8	7777	250	Totale	Si
131.2	SLE RA 18	-0.025	196.8	7777	250	Totale	Si
131.2	SLE RA 3	-0.025	196.8	7794.9	250	Totale	Si
131.2	SLE RA 7	-0.021	196.8	9197.3	350	Variabile	Si
131.2	SLE RA 6	-0.021	196.8	9197.3	350	Variabile	Si
131.2	SLE RA 19	-0.021	196.8	9222.9	350	Variabile	Si
131.2	SLE RA 18	-0.021	196.8	9222.9	350	Variabile	Si
131.2	SLE RA 3	-0.021	196.8	9248	350	Variabile	Si

Superelemento in acciaio composto dall'asta 240

Caratteristiche del materiale

Acciaio: S275, fyk = 2750

Caratteristiche geometriche

Lunghezza: 196.8
Nodo iniziale: 47 Nodo finale: 118
Cerniera iniziale: No Cerniera finale: No
Sovraresistenza: 0% Sisma Z: No

Caratteristiche della sezione

Sezione	Rotazione	Area	Jx	Jy	ix	iy	Wx	Wy	Wplx	Wply
HEA160	0	38.82	1674.7	615.62	6.57	3.98	220.36	76.95	245.43	117.67

Verifiche di resistenza

Verifiche a forza assiale §4.2.4.1.2.1 - §4.2.4.1.2.2 NTC18

X	Comb.	Sfruttamento	Classe	NEd	Nc,Rd	Nt,Rd	Riduzione da taglio	ρx	ρy	Verifica
0	SLU 118	0.539	1	-54807.3	101662.9		1	0	0	Si

Verifiche a forza assiale SLD §4.2.4.1.2.1 - §4.2.4.1.2.2 NTC18

X	Comb.	Sfruttamento	Classe	NEd	Nc,Rd	Nt,Rd	Riduzione da taglio	ρx	ρy	Verifica
0	SLD 14	0.057	1	-5762.5	101662.9		1	0	0	Si

Verifica a taglio X §4.2.4.1.2.4 NTC18

X	Comb.	Sfruttamento	VEd	Vc,Rd	Av	Interazione taglio-torsione	Riduzione torsione	Verifica
0	SLV 11	0.001	52.7	46333.4	30.78	Considerata	1	Si

Verifica a taglio Y §4.2.4.1.2.4 NTC18

X	Comb.	Sfruttamento	VEd	Vc,Rd	Av	Interazione taglio-torsione	Riduzione torsione	Verifica
0	SLU 118	0.048	957.1	20045.7	13.26	Considerata	1	Si

Verifica a taglio Y SLD §4.2.4.1.2.4 NTC18

X	Comb.	Sfruttamento	VEd	Vc,Rd	Av	Interazione taglio-torsione	Riduzione torsione	Verifica
0	SLD 13	0.004	73.3	20035.7	13.26	Considerata	1	Si

Verifica a torsione §4.2.4.1.2.5 NTC18

X	Comb.	Sfruttamento torsione	TEd	TRd	Riduzione taglio resistente	Sfruttamento taglio-torsione	τEd,totale	τRd	Verifica
196.8	SLV 11	0.011	160.9	14685.6	Considerata				Si

Verifica a torsione SLD §4.2.4.1.2.5 NTC18

X	Comb.	Sfruttamento torsione	TEd	TRd	Riduzione taglio resistente	Sfruttamento taglio-torsione	τEd,totale	τRd	Verifica
196.8	SLD 11	0.004	61	14685.6	Considerata				Si

Verifica a presso/tenso flessione retta X §§ 4.2.4.1.2.3 - 4.2.4.1.2.6 - 4.2.4.1.2.7 - 4.2.4.1.2.8 NTC18

Verifiche eseguite utilizzando la formula conservativa (6.2) §6.2.1 EN 1993-1-1:2005.

X	Comb.	Sfruttamento	Classe	NEd	NRd	Rid. NRd da VEd	Mx,Ed	Mx,Rd	Rid. Mx,Rd da VEd	Rid. Mx,Rd da NEd	ρx	ρy	Verifica
196.8	SLU 118	0.722	1	-54767.6	101662.9	1	-117971	642783	1		0	0	Si

Verifica a presso/tenso flessione retta Y §§ 4.2.4.1.2.3 - 4.2.4.1.2.6 - 4.2.4.1.2.7 - 4.2.4.1.2.8 NTC18

Verifiche eseguite utilizzando la formula conservativa (6.2) §6.2.1 EN 1993-1-1:2005.

X	Comb.	Sfruttamento	Classe	NEd	NRd	Rid. NRd da VEd	My,Ed	My,Rd	Rid. My,Rd da VEd	Rid. My,Rd da NEd	ρx	ρy	Verifica
45.9	SLV 9	0.092	1	-5332.4	101662.9	1	-12051	308186	1		0	0	Si

Verifica a presso/tenso flessione retta Y SLD §§ 4.2.4.1.2.3 - 4.2.4.1.2.6 - 4.2.4.1.2.7 - 4.2.4.1.2.8 NTC18

Verifiche eseguite utilizzando la formula conservativa (6.2) §6.2.1 EN 1993-1-1:2005.

X	Comb.	Sfruttamento	Classe	NEd	NRd	Rid. NRd da VEd	My,Ed	My,Rd	Rid. My,Rd da VEd	Rid. My,Rd da NEd	ρx	ρy	Verifica
39.4	SLD 9	0.063	1	-4918.9	101662.9	1	-4438	308186	1		0	0	Si

Verifica a presso/tenso flessione deviata §§ 4.2.4.1.2.3 - 4.2.4.1.2.6 - 4.2.4.1.2.7 - 4.2.4.1.2.8 NTC18

Verifiche eseguite utilizzando la formula conservativa (6.2) §6.2.1 EN 1993-1-1:2005.

X	Comb.	Sfruttamento	Classe	NEd	NRd	Rid. NRd da VEd	Mx,Ed	Mx,Rd	My,Ed	My,Rd	Rid. Mx,Rd da VEd	Rid. Mx,Rd da NEd	Rid. My,Rd da VEd	Rid. My,Rd da NEd	α	β	ρx	ρy	Verifica
196.8	SLV 12	0.126	1	-5309	101662.9	1	-5795	642783	20006	308186	1		1				0	0	Si

Verifica a presso/tenso flessione deviata SLD §§ 4.2.4.1.2.3 - 4.2.4.1.2.6 - 4.2.4.1.2.7 - 4.2.4.1.2.8 NTC18

Verifiche eseguite utilizzando la formula conservativa (6.2) §6.2.1 EN 1993-1-1:2005.

X	Comb.	Sfruttamento	Classe	NEd	NRd	Rid. NRd da VEd	Mx,Ed	Mx,Rd	My,Ed	My,Rd	Rid. Mx,Rd da VEd	Rid. Mx,Rd da NEd	Rid. My,Rd da VEd	Rid. My,Rd da NEd	α	β	ρx	ρy	Verifica
196.8	SLD 11	0.081	1	-4894.5	101662.9	1	-5463	642783	7585	308186	1		1				0	0	Si

Verifiche ad instabilità

Caratteristiche iniziali

Membratura principale per controllo snellezza; Calcolo di snellezze ed N critici condotti secondo gli assi principali;
Curva X: b; Curva Y: c; Svergolamento: Carico all'estradosso; Curva svergolamento: b;

Dati per instabilità attorno a x

Numero rit.	Presente	Ascissa	Campata	βx/m	Vincolo a entrambi estremi	λx/m	λVer
1	Si	0					
			1-2	1	Si	30	Si, (<200)
2	Si	196.8					

Dati per instabilità attorno a y

Numero rit.	Presente	Ascissa	Campata	βy/n	k,LT	kw,LT	Vincolo a entrambi estremi	λy/n	λVer
1	Si	0							
			1-2	1	1	1	Si	49.4	Si, (<200)
2	Si	196.8							

Verifica di stabilità per pressoflessione §C.4.2.4.1.3.3.2 NTC18

X	Comb.	Sfruttamento	Classe	NEd	NRk	Mx,Ed max	Mx,Rk	My,Ed max	My,Rk	χ,x	χ,y	kxx	kxy	kyx	kyy	χ,LT	Verifica
0	SLU 117	0.818	1	-54807.3	106746.1	117971	674922.6	0.6	323595.1	0.947	0.803	0.433	0.602	0.745	1.003	0.934	Si

Verifica di stabilità per pressoflessione SLD §C.4.2.4.1.3.3.2 NTC18

X	Comb.	Sfruttamento	Classe	NEd	NRk	Mx,Ed max	Mx,Rk	My,Ed max	My,Rk	χ,x	χ,y	kxx	kxy	kyx	kyy	χ,LT	Verifica
0	SLD 9	0.089	1	-4924.9	106746.1	5462.8	674922.6	7585.1	323595.1	0.947	0.803	0.628	0.491	0.991	0.818	0.934	Si

Verifica di stabilità a taglio anima Y §4.2.4.1.2.4 [4.2.27] NTC18

η	hw	tw	hw/tw max	Verifica
1.2	13.4	0.6	55.46	Si

Verifica di stabilità a taglio anima Y SLD §4.2.4.1.2.4 [4.2.27] NTC18

η	hw	tw	hw/tw max	Verifica
1.2	13.4	0.6	55.46	Si

Verifiche a deformabilità

Mensola X: No; Mensola Y: No.

Frecce lungo X

Ascissa freccia	Combinazione	Freccia	Luce	L/f	L/f,min	Tipo	Verifica
118.1	SLE RA 1	0	196.8	10000	250	Totale	Si
124.6	SLE RA 31	0	196.8	10000	250	Totale	Si
144.3	SLE RA 30	0	196.8	10000	250	Totale	Si
124.6	SLE RA 29	0	196.8	10000	250	Totale	Si
144.3	SLE RA 28	0	196.8	10000	250	Totale	Si
91.8	SLE RA 2	0	196.8	10000	350	Variabile	Si
124.6	SLE RA 31	0	196.8	10000	350	Variabile	Si
144.3	SLE RA 30	0	196.8	10000	350	Variabile	Si
124.6	SLE RA 29	0	196.8	10000	350	Variabile	Si
144.3	SLE RA 28	0	196.8	10000	350	Variabile	Si

Frecce lungo Y

Ascissa freccia	Combinazione	Freccia	Luce	L/f	L/f,min	Tipo	Verifica
131.2	SLE RA 19	-0.032	196.8	6129.7	250	Totale	Si
131.2	SLE RA 18	-0.032	196.8	6129.7	250	Totale	Si
131.2	SLE RA 7	-0.032	196.8	6160.1	250	Totale	Si
131.2	SLE RA 6	-0.032	196.8	6160.1	250	Totale	Si
131.2	SLE RA 15	-0.032	196.8	6191.2	250	Totale	Si
131.2	SLE RA 19	-0.028	196.8	6993.9	350	Variabile	Si
131.2	SLE RA 18	-0.028	196.8	6993.9	350	Variabile	Si
131.2	SLE RA 7	-0.028	196.8	7033.5	350	Variabile	Si
131.2	SLE RA 6	-0.028	196.8	7033.5	350	Variabile	Si
131.2	SLE RA 15	-0.028	196.8	7074	350	Variabile	Si

Superelemento in acciaio composto dall'asta 241

Caratteristiche del materiale

Acciaio: S275, fyk = 2750

Caratteristiche geometriche

Lunghezza: 196.8
Nodo iniziale: 46 Nodo finale: 118
Cerniera iniziale: No Cerniera finale: No
Sovraresistenza: 0% Sisma Z: No

Caratteristiche della sezione

Sezione	Rotazione	Area	Jx	Jy	ix	iy	Wx	Wy	Wplx	Wply
HEA160	0	38.82	1674.7	615.62	6.57	3.98	220.36	76.95	245.43	117.67

Verifiche di resistenza

Verifiche a forza assiale §4.2.4.1.2.1 - §4.2.4.1.2.2 NTC18

X	Comb.	Sfruttamento	Classe	NEd	Nc,Rd	Nt,Rd	Riduzione da taglio	ρx	ρy	Verifica
0	SLU 85	0.541	1	-54972.4	101662.9		1	0	0	Si

Verifiche a forza assiale SLD §4.2.4.1.2.1 - §4.2.4.1.2.2 NTC18

X	Comb.	Sfruttamento	Classe	NEd	Nc,Rd	Nt,Rd	Riduzione da taglio	ρx	ρy	Verifica
0	SLD 1	0.057	1	-5762.5	101662.9		1	0	0	Si

Verifica a taglio X §4.2.4.1.2.4 NTC18

X	Comb.	Sfruttamento	VEd	Vc,Rd	Av	Interazione taglio-torsione	Riduzione torsione	Verifica
0	SLV 8	0.001	-52.7	46333.4	30.78	Considerata	1	Si

Verifica a taglio Y §4.2.4.1.2.4 NTC18

X	Comb.	Sfruttamento	VEd	Vc,Rd	Av	Interazione taglio-torsione	Riduzione torsione	Verifica
0	SLU 106	0.048	952.2	20045.7	13.26	Considerata	1	Si

Verifica a taglio Y SLD §4.2.4.1.2.4 NTC18

X	Comb.	Sfruttamento	VEd	Vc,Rd	Av	Interazione taglio-torsione	Riduzione torsione	Verifica
0	SLD 1	0.004	73.3	20035.7	13.26	Considerata	1	Si

Verifica a torsione §4.2.4.1.2.5 NTC18

X	Comb.	Sfruttamento torsione	TEd	TRd	Riduzione taglio resistente	Sfruttamento taglio-torsione	τEd,totale	τRd	Verifica
196.8	SLV 8	0.011	-160.9	14685.6	Considerata				Si

Verifica a torsione SLD §4.2.4.1.2.5 NTC18

X	Comb.	Sfruttamento torsione	TEd	TRd	Riduzione taglio resistente	Sfruttamento taglio-torsione	τEd,totale	τRd	Verifica
196.8	SLD 8	0.004	-61	14685.6	Considerata				Si

Verifica a presso/tenso flessione retta X §§ 4.2.4.1.2.3 - 4.2.4.1.2.6 - 4.2.4.1.2.7 - 4.2.4.1.2.8 NTC18

Verifiche eseguite utilizzando la formula conservativa (6.2) §6.2.1 EN 1993-1-1:2005.

X	Comb.	Sfruttamento	Classe	NEd	NRd	Rid. NRd da VEd	Mx,Ed	Mx,Rd	Rid. Mx,Rd da VEd	Rid. Mx,Rd da NEd	ρx	ρy	Verifica
196.8	SLU 118	0.722	1	-54932.8	101662.9	1	-117045	642783	1		0	0	Si

Verifica a presso/tenso flessione retta Y §§ 4.2.4.1.2.3 - 4.2.4.1.2.6 - 4.2.4.1.2.7 - 4.2.4.1.2.8 NTC18

Verifiche eseguite utilizzando la formula conservativa (6.2) §6.2.1 EN 1993-1-1:2005.

X	Comb.	Sfruttamento	Classe	NEd	NRd	Rid. NRd da VEd	My,Ed	My,Rd	Rid. My,Rd da VEd	Rid. My,Rd da NEd	ρx	ρy	Verifica
45.9	SLV 5	0.092	1	-5332.4	101662.9	1	12051	308186	1		0	0	Si

Verifica a presso/tenso flessione retta Y SLD §§ 4.2.4.1.2.3 - 4.2.4.1.2.6 - 4.2.4.1.2.7 - 4.2.4.1.2.8 NTC18

Verifiche eseguite utilizzando la formula conservativa (6.2) §6.2.1 EN 1993-1-1:2005.

X	Comb.	Sfruttamento	Classe	NEd	NRd	Rid. NRd da VEd	My,Ed	My,Rd	Rid. My,Rd da VEd	Rid. My,Rd da NEd	ρx	ρy	Verifica
39.4	SLD 5	0.063	1	-4918.9	101662.9	1	4438	308186	1		0	0	Si

Verifica a presso/tenso flessione deviata §§ 4.2.4.1.2.3 - 4.2.4.1.2.6 - 4.2.4.1.2.7 - 4.2.4.1.2.8 NTC18

Verifiche eseguite utilizzando la formula conservativa (6.2) §6.2.1 EN 1993-1-1:2005.

X	Comb.	Sfruttamento	Classe	NEd	NRd	Rid. NRd da VEd	Mx,Ed	Mx,Rd	My,Ed	My,Rd	Rid. Mx,Rd da VEd	Rid. Mx,Rd da NEd	Rid. My,Rd da VEd	Rid. My,Rd da NEd	α	β	ρx	ρy	Verifica
196.8	SLV 7	0.126	1	-5309	101662.9	1	-5795	642783	-20006	308186	1		1				0	0	Si

Verifica a presso/tenso flessione deviata SLD §§ 4.2.4.1.2.3 - 4.2.4.1.2.6 - 4.2.4.1.2.7 - 4.2.4.1.2.8 NTC18

Verifiche eseguite utilizzando la formula conservativa (6.2) §6.2.1 EN 1993-1-1:2005.

X	Comb.	Sfruttamento	Classe	NEd	NRd	Rid. NRd da VEd	Mx,Ed	Mx,Rd	My,Ed	My,Rd	Rid. Mx,Rd da VEd	Rid. Mx,Rd da NEd	Rid. My,Rd da VEd	Rid. My,Rd da NEd	α	β	ρx	ρy	Verifica
196.8	SLD 8	0.081	1	-4894.5	101662.9	1	-5463	642783	-7585	308186	1		1				0	0	Si

Verifiche ad instabilità

Caratteristiche iniziali

Membratura principale per controllo snellezza; Calcolo di snellezze ed N critici condotti secondo gli assi principali;
Curva X: b; Curva Y: c; Svergolamento: Carico all'estradosso; Curva svergolamento: b;

Dati per instabilità attorno a x

Numero rit.	Presente	Ascissa	Campata	βx/m	Vincolo a entrambi estremi	λx/m	λVer
1	Si	0					
			1-2	1	Si	30	Si, (<200)

Numero rit.	Presente	Ascissa	Campata	βx/m	Vincolo a entrambi estremi	λx/m	λVer
2	Si	196.8					

Dati per instabilità attorno a y

Numero rit.	Presente	Ascissa	Campata	βy/n	k,LT	kw,LT	Vincolo a entrambi estremi	λy/n	λVer
1	Si	0							
			1-2	1	1	1	Si	49.4	Si, (<200)
2	Si	196.8							

Verifica di stabilità per pressoflessione §C.4.2.4.1.3.3.2 NTC18

X	Comb.	Sfruttamento	Classe	NEd	NRk	Mx,Ed max	Mx,Rk	My,Ed max	My,Rk	χ,x	χ,y	kxx	kxy	kyx	kyy	χ,LT	Verifica
0	SLU 84	0.818	1	-54972.4	106746.1	117045	674922.6	0.6	323595.1	0.947	0.803	0.433	0.613	0.745	1.022	0.934	Si

Verifica di stabilità per pressoflessione SLD §C.4.2.4.1.3.3.2 NTC18

X	Comb.	Sfruttamento	Classe	NEd	NRk	Mx,Ed max	Mx,Rk	My,Ed max	My,Rk	χ,x	χ,y	kxx	kxy	kyx	kyy	χ,LT	Verifica
0	SLD 7	0.089	1	-4924.9	106746.1	5462.8	674922.6	7585.1	323595.1	0.947	0.803	0.628	0.491	0.991	0.818	0.934	Si

Verifica di stabilità a taglio anima Y §4.2.4.1.2.4 [4.2.27] NTC18

η	hw	tw	hw/tw max	Verifica
1.2	13.4	0.6	55.46	Si

Verifica di stabilità a taglio anima Y SLD §4.2.4.1.2.4 [4.2.27] NTC18

η	hw	tw	hw/tw max	Verifica
1.2	13.4	0.6	55.46	Si

Verifiche a deformabilità

Mensola X: No; Mensola Y: No.

Frecce lungo X

Ascissa freccia	Combinazione	Freccia	Luce	L/f	L/f,min	Tipo	Verifica
118.1	SLE RA 1	0	196.8	10000	250	Totale	Si
124.6	SLE RA 31	0	196.8	10000	250	Totale	Si
144.3	SLE RA 30	0	196.8	10000	250	Totale	Si
124.6	SLE RA 29	0	196.8	10000	250	Totale	Si
144.3	SLE RA 28	0	196.8	10000	250	Totale	Si
91.8	SLE RA 2	0	196.8	10000	350	Variabile	Si
124.6	SLE RA 31	0	196.8	10000	350	Variabile	Si
144.3	SLE RA 30	0	196.8	10000	350	Variabile	Si
124.6	SLE RA 29	0	196.8	10000	350	Variabile	Si
144.3	SLE RA 28	0	196.8	10000	350	Variabile	Si

Frecce lungo Y

Ascissa freccia	Combinazione	Freccia	Luce	L/f	L/f,min	Tipo	Verifica
131.2	SLE RA 7	-0.032	196.8	6184.4	250	Totale	Si
131.2	SLE RA 6	-0.032	196.8	6184.4	250	Totale	Si
131.2	SLE RA 19	-0.032	196.8	6194.3	250	Totale	Si
131.2	SLE RA 18	-0.032	196.8	6194.3	250	Totale	Si
131.2	SLE RA 3	-0.032	196.8	6222.2	250	Totale	Si
131.2	SLE RA 7	-0.028	196.8	7065.2	350	Variabile	Si
131.2	SLE RA 6	-0.028	196.8	7065.2	350	Variabile	Si
131.2	SLE RA 19	-0.028	196.8	7078.1	350	Variabile	Si
131.2	SLE RA 18	-0.028	196.8	7078.1	350	Variabile	Si
131.2	SLE RA 3	-0.028	196.8	7114.6	350	Variabile	Si

Superelemento in acciaio composto dall'asta 242

Caratteristiche del materiale

Acciaio: S275, fyk = 2750

Caratteristiche geometriche

Lunghezza: 196.8
Nodo iniziale: 51 Nodo finale: 119
Cerniera iniziale: No Cerniera finale: No
Sovraresistenza: 0% Sisma Z: No

Caratteristiche della sezione

Sezione	Rotazione	Area	Jx	Jy	ix	iy	Wx	Wy	Wplx	Wply
HEA160	0	38.82	1674.7	615.62	6.57	3.98	220.36	76.95	245.43	117.67

Verifiche di resistenza

Verifiche a forza assiale §4.2.4.1.2.1 - §4.2.4.1.2.2 NTC18

X	Comb.	Sfruttamento	Classe	NEd	Nc,Rd	Nt,Rd	Riduzione da taglio	ρx	ρy	Verifica
0	SLU 85	0.65	1	-66104.2	101662.9		1	0	0	Si

Verifiche a forza assiale SLD §4.2.4.1.2.1 - §4.2.4.1.2.2 NTC18

X	Comb.	Sfruttamento	Classe	NEd	Nc,Rd	Nt,Rd	Riduzione da taglio	ρx	ρy	Verifica
0	SLD 14	0.057	1	-5762.5	101662.9		1	0	0	Si

Verifica a taglio X §4.2.4.1.2.4 NTC18

X	Comb.	Sfruttamento	VEd	Vc,Rd	Av	Interazione taglio-torsione	Riduzione torsione	Verifica
52.5	SLV 8	0.001	52.8	46333.4	30.78	Considerata	1	Si

Verifica a taglio Y §4.2.4.1.2.4 NTC18

X	Comb.	Sfruttamento	VEd	Vc,Rd	Av	Interazione taglio-torsione	Riduzione torsione	Verifica
0	SLU 85	0.057	1148.4	20045.7	13.26	Considerata	1	Si

Verifica a taglio Y SLD §4.2.4.1.2.4 NTC18

X	Comb.	Sfruttamento	VEd	Vc,Rd	Av	Interazione taglio-torsione	Riduzione torsione	Verifica
0	SLD 13	0.004	73.3	20035.7	13.26	Considerata	1	Si

Verifica a torsione §4.2.4.1.2.5 NTC18

X	Comb.	Sfruttamento torsione	TEd	TRd	Riduzione taglio resistente	Sfruttamento taglio-torsione	τEd,totale	τRd	Verifica
105	SLV 5	0.011	-160.9	14685.6	Considerata				Si

Verifica a torsione SLD §4.2.4.1.2.5 NTC18

X	Comb.	Sfruttamento torsione	TEd	TRd	Riduzione taglio resistente	Sfruttamento taglio-torsione	τEd,totale	τRd	Verifica
105	SLD 5	0.004	-61	14685.6	Considerata				Si

Verifica a presso/tenso flessione retta X §§ 4.2.4.1.2.3 - 4.2.4.1.2.6 - 4.2.4.1.2.7 - 4.2.4.1.2.8 NTC18

Verifiche eseguite utilizzando la formula conservativa (6.2) §6.2.1 EN 1993-1-1:2005.

X	Comb.	Sfruttamento	Classe	NEd	NRd	Rid. NRd da VEd	Mx,Ed	Mx,Rd	Rid. Mx,Rd da VEd	Rid. Mx,Rd da NEd	ρx	ρy	Verifica
196.8	SLU 85	0.871	1	-66064.6	101662.9	1	-142297	642783	1		0	0	Si

Verifica a presso/tenso flessione retta Y §§ 4.2.4.1.2.3 - 4.2.4.1.2.6 - 4.2.4.1.2.7 - 4.2.4.1.2.8 NTC18

Verifiche eseguite utilizzando la formula conservativa (6.2) §6.2.1 EN 1993-1-1:2005.

X	Comb.	Sfruttamento	Classe	NEd	NRd	Rid. NRd da VEd	My,Ed	My,Rd	Rid. My,Rd da VEd	Rid. My,Rd da NEd	ρx	ρy	Verifica
45.9	SLV 12	0.092	1	-5332.4	101662.9	1	12057	308186	1		0	0	Si

Verifica a presso/tenso flessione retta Y SLD §§ 4.2.4.1.2.3 - 4.2.4.1.2.6 - 4.2.4.1.2.7 - 4.2.4.1.2.8 NTC18

Verifiche eseguite utilizzando la formula conservativa (6.2) §6.2.1 EN 1993-1-1:2005.

X	Comb.	Sfruttamento	Classe	NEd	NRd	Rid. NRd da VEd	My,Ed	My,Rd	Rid. My,Rd da VEd	Rid. My,Rd da NEd	ρx	ρy	Verifica
39.4	SLD 11	0.063	1	-4918.9	101662.9	1	4440	308186	1		0	0	Si

Verifica a presso/tenso flessione deviata §§ 4.2.4.1.2.3 - 4.2.4.1.2.6 - 4.2.4.1.2.7 - 4.2.4.1.2.8 NTC18

Verifiche eseguite utilizzando la formula conservativa (6.2) §6.2.1 EN 1993-1-1:2005.

X	Comb.	Sfruttamento	Classe	NEd	NRd	Rid. NRd da VEd	Mx,Ed	Mx,Rd	My,Ed	My,Rd	Rid. Mx,Rd da VEd	Rid. Mx,Rd da NEd	Rid. My,Rd da VEd	Rid. My,Rd da NEd	α	β	ρx	ρy	Verifica
196.8	SLV 12	0.126	1	-5309	101662.9	1	-5795	642783	20024	308186	1		1				0	0	Si

Verifica a presso/tenso flessione deviata SLD §§ 4.2.4.1.2.3 - 4.2.4.1.2.6 - 4.2.4.1.2.7 - 4.2.4.1.2.8 NTC18

Verifiche eseguite utilizzando la formula conservativa (6.2) §6.2.1 EN 1993-1-1:2005.

X	Comb.	Sfruttamento	Classe	NEd	NRd	Rid. NRd da VEd	Mx,Ed	Mx,Rd	My,Ed	My,Rd	Rid. Mx,Rd da VEd	Rid. Mx,Rd da NEd	Rid. My,Rd da VEd	Rid. My,Rd da NEd	α	β	ρx	ρy	Verifica
196.8	SLD 12	0.081	1	-4894.5	101662.9	1	-5463	642783	7593	308186	1		1				0	0	Si

Verifiche ad instabilità

Caratteristiche iniziali

Membratura principale per controllo snellezza; Calcolo di snellezze ed N critici condotti secondo gli assi principali;
Curva X: b; Curva Y: c; Svergolamento: Carico all'estradosso; Curva svergolamento: b;

Dati per instabilità attorno a x

Numero rit.	Presente	Ascissa	Campata	βx/m	Vincolo a entrambi estremi	λx/m	λVer
1	Si	0					
			1-2	1	Si	30	Si, (<200)
2	Si	196.8					

Dati per instabilità attorno a y

Numero rit.	Presente	Ascissa	Campata	βy/n	k,LT	kw,LT	Vincolo a entrambi estremi	λy/n	λVer
1	Si	0							
			1-2	1	1	1	Si	49.4	Si, (<200)
2	Si	196.8							

Verifica di stabilità per pressoflessione §C.4.2.4.1.3.3.2 NTC18

X	Comb.	Sfruttamento	Classe	NEd	NRk	Mx,Ed max	Mx,Rk	My,Ed max	My,Rk	χ,x	χ,y	kxx	kxy	kyx	kyy	χ,LT	Verifica
0	SLU 118	0.974	1	-66104.2	106746.1	142297.2	674922.6	2.5	323595.1	0.947	0.803	0.44	0.376	0.693	0.626	0.934	Si

Verifica di stabilità per pressoflessione SLD §C.4.2.4.1.3.3.2 NTC18

X	Comb.	Sfruttamento	Classe	NEd	NRk	Mx,Ed max	Mx,Rk	My,Ed max	My,Rk	χ,x	χ,y	kxx	kxy	kyx	kyy	χ,LT	Verifica
0	SLD 12	0.089	1	-4924.9	106746.1	5462.8	674922.6	7593	323595.1	0.947	0.803	0.628	0.491	0.991	0.818	0.934	Si

Verifica di stabilità a taglio anima Y §4.2.4.1.2.4 [4.2.27] NTC18

η	hw	tw	hw/tw max	Verifica
1.2	13.4	0.6	55.46	Si

Verifica di stabilità a taglio anima Y SLD §4.2.4.1.2.4 [4.2.27] NTC18

η	hw	tw	hw/tw max	Verifica
1.2	13.4	0.6	55.46	Si

Verifiche a deformabilità

Mensola X: No; Mensola Y: No.

Frecce lungo X

Ascissa freccia	Combinazione	Freccia	Luce	L/f	L/f,min	Tipo	Verifica
118.1	SLE RA 1	0	196.8	10000	250	Totale	Si
124.6	SLE RA 31	0	196.8	10000	250	Totale	Si
124.6	SLE RA 30	0	196.8	10000	250	Totale	Si
124.6	SLE RA 29	0	196.8	10000	250	Totale	Si
124.6	SLE RA 28	0	196.8	10000	250	Totale	Si
91.8	SLE RA 2	0	196.8	10000	350	Variabile	Si
144.3	SLE RA 31	0	196.8	10000	350	Variabile	Si
137.8	SLE RA 30	0	196.8	10000	350	Variabile	Si
150.9	SLE RA 29	0	196.8	10000	350	Variabile	Si
137.8	SLE RA 28	0	196.8	10000	350	Variabile	Si

Frecce lungo Y

Ascissa freccia	Combinazione	Freccia	Luce	L/f	L/f,min	Tipo	Verifica
131.2	SLE RA 19	-0.038	196.8	5138.5	250	Totale	Si
131.2	SLE RA 18	-0.038	196.8	5138.5	250	Totale	Si
131.2	SLE RA 7	-0.038	196.8	5138.5	250	Totale	Si
131.2	SLE RA 6	-0.038	196.8	5138.5	250	Totale	Si
131.2	SLE RA 15	-0.038	196.8	5178.3	250	Totale	Si
131.2	SLE RA 19	-0.034	196.8	5732.3	350	Variabile	Si
131.2	SLE RA 18	-0.034	196.8	5732.3	350	Variabile	Si
131.2	SLE RA 7	-0.034	196.8	5732.3	350	Variabile	Si
131.2	SLE RA 6	-0.034	196.8	5732.3	350	Variabile	Si
131.2	SLE RA 15	-0.034	196.8	5781.9	350	Variabile	Si

Superelemento in acciaio composto dall'asta 243

Caratteristiche del materiale

Acciaio: S275, fyk = 2750

Caratteristiche geometriche

Lunghezza: 196.8
Nodo iniziale: 50 Nodo finale: 119
Cerniera iniziale: No Cerniera finale: No
Sovraresistenza: 0% Sisma Z: No

Caratteristiche della sezione

Sezione	Rotazione	Area	Jx	Jy	ix	iy	Wx	Wy	Wplx	Wply
HEA160	0	38.82	1674.7	615.62	6.57	3.98	220.36	76.95	245.43	117.67

Verifiche di resistenza

Verifiche a forza assiale §4.2.4.1.2.1 - §4.2.4.1.2.2 NTC18

X	Comb.	Sfruttamento	Classe	NEd	Nc,Rd	Nt,Rd	Riduzione da taglio	ρx	ρy	Verifica
0	SLU 118	0.65	1	-66104.2	101662.9		1	0	0	Si

Verifiche a forza assiale SLD §4.2.4.1.2.1 - §4.2.4.1.2.2 NTC18

X	Comb.	Sfruttamento	Classe	NEd	Nc,Rd	Nt,Rd	Riduzione da taglio	ρx	ρy	Verifica
0	SLD 1	0.057	1	-5762.5	101662.9		1	0	0	Si

Verifica a taglio X §4.2.4.1.2.4 NTC18

X	Comb.	Sfruttamento	VEd	Vc,Rd	Av	Interazione taglio-torsione	Riduzione torsione	Verifica
32.8	SLV 11	0.001	-52.8	46333.4	30.78	Considerata	1	Si

Verifica a taglio Y §4.2.4.1.2.4 NTC18

X	Comb.	Sfruttamento	VEd	Vc,Rd	Av	Interazione taglio-torsione	Riduzione torsione	Verifica
0	SLU 106	0.057	1148.4	20045.7	13.26	Considerata	1	Si

Verifica a taglio Y SLD §4.2.4.1.2.4 NTC18

X	Comb.	Sfruttamento	VEd	Vc,Rd	Av	Interazione taglio-torsione	Riduzione torsione	Verifica
0	SLD 1	0.004	73.3	20035.7	13.26	Considerata	1	Si

Verifica a torsione §4.2.4.1.2.5 NTC18

X	Comb.	Sfruttamento torsione	TEd	TRd	Riduzione taglio resistente	Sfruttamento taglio-torsione	τEd,totale	τRd	Verifica
196.8	SLV 10	0.011	160.9	14685.6	Considerata				Si

Verifica a torsione SLD §4.2.4.1.2.5 NTC18

X	Comb.	Sfruttamento torsione	TEd	TRd	Riduzione taglio resistente	Sfruttamento taglio-torsione	τEd,totale	τRd	Verifica
196.8	SLD 10	0.004	61	14685.6	Considerata				Si

Verifica a presso/tenso flessione retta X §§ 4.2.4.1.2.3 - 4.2.4.1.2.6 - 4.2.4.1.2.7 - 4.2.4.1.2.8 NTC18

Verifiche eseguite utilizzando la formula conservativa (6.2) §6.2.1 EN 1993-1-1:2005.

X	Comb.	Sfruttamento	Classe	NEd	NRd	Rid. NRd da VEd	Mx,Ed	Mx,Rd	Rid. Mx,Rd da VEd	Rid. Mx,Rd da NEd	ρx	ρy	Verifica
196.8	SLU 118	0.871	1	-66064.6	101662.9	1	-142297	642783	1		0	0	Si

Verifica a presso/tenso flessione retta Y §§ 4.2.4.1.2.3 - 4.2.4.1.2.6 - 4.2.4.1.2.7 - 4.2.4.1.2.8 NTC18

Verifiche eseguite utilizzando la formula conservativa (6.2) §6.2.1 EN 1993-1-1:2005.

X	Comb.	Sfruttamento	Classe	NEd	NRd	Rid. NRd da VEd	My,Ed	My,Rd	Rid. My,Rd da VEd	Rid. My,Rd da NEd	ρx	ρy	Verifica
45.9	SLV 7	0.092	1	-5332.4	101662.9	1	-12057	308186	1		0	0	Si

Verifica a presso/tenso flessione retta Y SLD §§ 4.2.4.1.2.3 - 4.2.4.1.2.6 - 4.2.4.1.2.7 - 4.2.4.1.2.8 NTC18

Verifiche eseguite utilizzando la formula conservativa (6.2) §6.2.1 EN 1993-1-1:2005.

X	Comb.	Sfruttamento	Classe	NEd	NRd	Rid. NRd da VEd	My,Ed	My,Rd	Rid. My,Rd da VEd	Rid. My,Rd da NEd	ρx	ρy	Verifica
39.4	SLD 7	0.063	1	-4918.9	101662.9	1	-4440	308186	1		0	0	Si

Verifica a presso/tenso flessione deviata §§ 4.2.4.1.2.3 - 4.2.4.1.2.6 - 4.2.4.1.2.7 - 4.2.4.1.2.8 NTC18

Verifiche eseguite utilizzando la formula conservativa (6.2) §6.2.1 EN 1993-1-1:2005.

X	Comb.	Sfruttamento	Classe	NEd	NRd	Rid. NRd da VEd	Mx,Ed	Mx,Rd	My,Ed	My,Rd	Rid. Mx,Rd da VEd	Rid. Mx,Rd da NEd	Rid. My,Rd da VEd	Rid. My,Rd da NEd	α	β	ρx	ρy	Verifica
196.8	SLV 7	0.126	1	-5309	101662.9	1	-5795	642783	-20024	308186	1		1				0	0	Si

Verifica a presso/tenso flessione deviata SLD §§ 4.2.4.1.2.3 - 4.2.4.1.2.6 - 4.2.4.1.2.7 - 4.2.4.1.2.8 NTC18

Verifiche eseguite utilizzando la formula conservativa (6.2) §6.2.1 EN 1993-1-1:2005.

X	Comb.	Sfruttamento	Classe	NEd	NRd	Rid. NRd da VEd	Mx,Ed	Mx,Rd	My,Ed	My,Rd	Rid. Mx,Rd da VEd	Rid. Mx,Rd da NEd	Rid. My,Rd da VEd	Rid. My,Rd da NEd	α	β	ρx	ρy	Verifica
196.8	SLD 8	0.081	1	-4894.5	101662.9	1	-5463	642783	-7593	308186	1		1				0	0	Si

Verifiche ad instabilità

Caratteristiche iniziali

Membratura principale per controllo snellezza; Calcolo di snellezze ed N critici condotti secondo gli assi principali;
Curva X: b; Curva Y: c; Svergolamento: Carico all'estradosso; Curva svergolamento: b;

Dati per instabilità attorno a x

Numero rit.	Presente	Ascissa	Campata	βx/m	Vincolo a entrambi estremi	λx/m	λVer
1	Si	0					
			1-2	1	Si	30	Si, (<200)
2	Si	196.8					

Dati per instabilità attorno a y

Numero rit.	Presente	Ascissa	Campata	βy/n	k,LT	kw,LT	Vincolo a entrambi estremi	λy/n	λVer
1	Si	0							
			1-2	1	1	1	Si	49.4	Si, (<200)
2	Si	196.8							

Verifica di stabilità per pressoflessione §C.4.2.4.1.3.3.2 NTC18

X	Comb.	Sfruttamento	Classe	NEd	NRk	Mx,Ed max	Mx,Rk	My,Ed max	My,Rk	χ,x	χ,y	kxx	kxy	kyx	kyy	χ,LT	Verifica
0	SLU 85	0.974	1	-66104.2	106746.1	142296.9	674922.6	2.5	323595.1	0.947	0.803	0.44	0.377	0.693	0.628	0.934	Si

Verifica di stabilità per pressoflessione SLD §C.4.2.4.1.3.3.2 NTC18

X	Comb.	Sfruttamento	Classe	NEd	NRk	Mx,Ed max	Mx,Rk	My,Ed max	My,Rk	χ,x	χ,y	kxx	kxy	kyx	kyy	χ,LT	Verifica
0	SLD 7	0.089	1	-4924.9	106746.1	5462.8	674922.6	7593	323595.1	0.947	0.803	0.628	0.491	0.991	0.818	0.934	Si

Verifica di stabilità a taglio anima Y §4.2.4.1.2.4 [4.2.27] NTC18

η	hw	tw	hw/tw max	Verifica
1.2	13.4	0.6	55.46	Si

Verifica di stabilità a taglio anima Y SLD §4.2.4.1.2.4 [4.2.27] NTC18

η	hw	tw	hw/tw max	Verifica
1.2	13.4	0.6	55.46	Si

Verifiche a deformabilità

Mensola X: No; Mensola Y: No.

Frecce lungo X

Ascissa freccia	Combinazione	Freccia	Luce	L/f	L/f,min	Tipo	Verifica
118.1	SLE RA 1	0	196.8	10000	250	Totale	Si
124.6	SLE RA 31	0	196.8	10000	250	Totale	Si
124.6	SLE RA 30	0	196.8	10000	250	Totale	Si
124.6	SLE RA 29	0	196.8	10000	250	Totale	Si
124.6	SLE RA 28	0	196.8	10000	250	Totale	Si
91.8	SLE RA 2	0	196.8	10000	350	Variabile	Si
144.3	SLE RA 31	0	196.8	10000	350	Variabile	Si
131.2	SLE RA 30	0	196.8	10000	350	Variabile	Si
150.9	SLE RA 29	0	196.8	10000	350	Variabile	Si
131.2	SLE RA 28	0	196.8	10000	350	Variabile	Si

Frecce lungo Y

Ascissa freccia	Combinazione	Freccia	Luce	L/f	L/f,min	Tipo	Verifica
131.2	SLE RA 7	-0.038	196.8	5138.5	250	Totale	Si
131.2	SLE RA 6	-0.038	196.8	5138.5	250	Totale	Si
131.2	SLE RA 19	-0.038	196.8	5138.6	250	Totale	Si
131.2	SLE RA 18	-0.038	196.8	5138.6	250	Totale	Si

Ascissa freccia	Combinazione	Freccia	Luce	L/f	L/f,min	Tipo	Verifica
131.2	SLE RA 3	-0.038	196.8	5178.3	250	Totale	Si
131.2	SLE RA 7	-0.034	196.8	5732.3	350	Variabile	Si
131.2	SLE RA 6	-0.034	196.8	5732.3	350	Variabile	Si
131.2	SLE RA 19	-0.034	196.8	5732.3	350	Variabile	Si
131.2	SLE RA 18	-0.034	196.8	5732.3	350	Variabile	Si
131.2	SLE RA 3	-0.034	196.8	5781.9	350	Variabile	Si

Superelemento in acciaio composto dall'asta 244

Caratteristiche del materiale

Acciaio: S275, fyk = 2750

Caratteristiche geometriche

Lunghezza: 196.8
Nodo iniziale: 55 Nodo finale: 120
Cerniera iniziale: No Cerniera finale: No
Sovraresistenza: 0% Sisma Z: No

Caratteristiche della sezione

Sezione	Rotazione	Area	Jx	Jy	ix	iy	Wx	Wy	Wplx	Wply
HEA160	0	38.82	1674.7	615.62	6.57	3.98	220.36	76.95	245.43	117.67

Verifiche di resistenza

Verifiche a forza assiale §4.2.4.1.2.1 - §4.2.4.1.2.2 NTC18

X	Comb.	Sfruttamento	Classe	NEd	Nc,Rd	Nt,Rd	Riduzione da taglio	ρx	ρy	Verifica
0	SLU 85	0.36	1	-36635.6	101662.9		1	0	0	Si

Verifiche a forza assiale SLD §4.2.4.1.2.1 - §4.2.4.1.2.2 NTC18

X	Comb.	Sfruttamento	Classe	NEd	Nc,Rd	Nt,Rd	Riduzione da taglio	ρx	ρy	Verifica
0	SLD 16	0.056	1	-5732.7	101662.9		1	0	0	Si

Verifica a taglio X §4.2.4.1.2.4 NTC18

X	Comb.	Sfruttamento	VEd	Vc,Rd	Av	Interazione taglio-torsione	Riduzione torsione	Verifica
196.8	SLV 12	0.001	53.1	46333.5	30.78	Considerata	1	Si

Verifica a taglio Y §4.2.4.1.2.4 NTC18

X	Comb.	Sfruttamento	VEd	Vc,Rd	Av	Interazione taglio-torsione	Riduzione torsione	Verifica
0	SLU 118	0.031	623.5	20045.7	13.26	Considerata	1	Si

Verifica a taglio Y SLD §4.2.4.1.2.4 NTC18

X	Comb.	Sfruttamento	VEd	Vc,Rd	Av	Interazione taglio-torsione	Riduzione torsione	Verifica
0	SLD 16	0.004	73	20035.7	13.26	Considerata	1	Si

Verifica a torsione §4.2.4.1.2.5 NTC18

X	Comb.	Sfruttamento torsione	TEd	TRd	Riduzione taglio resistente	Sfruttamento taglio-torsione	τEd,totale	τRd	Verifica
196.8	SLV 10	0.011	-160.9	14685.6	Considerata				Si

Verifica a torsione SLD §4.2.4.1.2.5 NTC18

X	Comb.	Sfruttamento torsione	TEd	TRd	Riduzione taglio resistente	Sfruttamento taglio-torsione	τEd,totale	τRd	Verifica
196.8	SLD 10	0.004	-61	14685.6	Considerata				Si

Verifica a presso/tenso flessione retta X §§ 4.2.4.1.2.3 - 4.2.4.1.2.6 - 4.2.4.1.2.7 - 4.2.4.1.2.8 NTC18

Verifiche eseguite utilizzando la formula conservativa (6.2) §6.2.1 EN 1993-1-1:2005.

X	Comb.	Sfruttamento	Classe	NEd	NRd	Rid. NRd da VEd	Mx,Ed	Mx,Rd	Rid. Mx,Rd da VEd	Rid. Mx,Rd da NEd	ρx	ρy	Verifica
196.8	SLU 85	0.478	1	-36596	101662.9	1	-75754	642783	1		0	0	Si

Verifica a presso/tenso flessione retta Y §§ 4.2.4.1.2.3 - 4.2.4.1.2.6 - 4.2.4.1.2.7 - 4.2.4.1.2.8 NTC18

Verifiche eseguite utilizzando la formula conservativa (6.2) §6.2.1 EN 1993-1-1:2005.

X	Comb.	Sfruttamento	Classe	NEd	NRd	Rid. NRd da VEd	My,Ed	My,Rd	Rid. My,Rd da VEd	Rid. My,Rd da NEd	ρx	ρy	Verifica
45.9	SLV 9	0.091	1	-5304.4	101662.9	1	-12072	308186	1		0	0	Si

Verifica a presso/tenso flessione retta Y SLD §§ 4.2.4.1.2.3 - 4.2.4.1.2.6 - 4.2.4.1.2.7 - 4.2.4.1.2.8 NTC18

Verifiche eseguite utilizzando la formula conservativa (6.2) §6.2.1 EN 1993-1-1:2005.

X	Comb.	Sfruttamento	Classe	NEd	NRd	Rid. NRd da VEd	My,Ed	My,Rd	Rid. My,Rd da VEd	Rid. My,Rd da NEd	ρx	ρy	Verifica
39.4	SLD 9	0.063	1	-4892.8	101662.9	1	-4446	308186	1		0	0	Si

Verifica a presso/tenso flessione deviata §§ 4.2.4.1.2.3 - 4.2.4.1.2.6 - 4.2.4.1.2.7 - 4.2.4.1.2.8 NTC18

Verifiche eseguite utilizzando la formula conservativa (6.2) §6.2.1 EN 1993-1-1:2005.

X	Comb.	Sfruttamento	Classe	NEd	NRd	Rid. NRd da VEd	Mx,Ed	Mx,Rd	My,Ed	My,Rd	Rid. Mx,Rd da VEd	Rid. Mx,Rd da NEd	Rid. My,Rd da VEd	Rid. My,Rd da NEd	α	β	ρx	ρy	Verifica
196.8	SLV 12	0.126	1	-5281.1	101662.9	1	-5756	642783	20076	308186	1		1				0	0	Si

Verifica a presso/tenso flessione deviata SLD §§ 4.2.4.1.2.3 - 4.2.4.1.2.6 - 4.2.4.1.2.7 - 4.2.4.1.2.8 NTC18

Verifiche eseguite utilizzando la formula conservativa (6.2) §6.2.1 EN 1993-1-1:2005.

X	Comb.	Sfruttamento	Classe	NEd	NRd	Rid. NRd da VEd	Mx,Ed	Mx,Rd	My,Ed	My,Rd	Rid. Mx,Rd da VEd	Rid. Mx,Rd da NEd	Rid. My,Rd da VEd	Rid. My,Rd da NEd	α	β	ρx	ρy	Verifica
196.8	SLD 12	0.081	1	-4868.5	101662.9	1	-5425	642783	7614	308186	1		1				0	0	Si

Verifiche ad instabilità

Caratteristiche iniziali

Membratura principale per controllo snellezza; Calcolo di snellezze ed N critici condotti secondo gli assi principali;
Curva X: b; Curva Y: c; Svergolamento: Carico all'estradosso; Curva svergolamento: b;

Dati per instabilità attorno a x

Numero rit.	Presente	Ascissa	Campata	βx/m	Vincolo a entrambi estremi	λx/m	λVer
1	Si	0					
			1-2	1	Si	30	Si, (<200)
2	Si	196.8					

Dati per instabilità attorno a y

Numero rit.	Presente	Ascissa	Campata	βy/n	k,LT	kw,LT	Vincolo a entrambi estremi	λy/n	λVer
1	Si	0							
			1-2	1	1	1	Si	49.4	Si, (<200)
2	Si	196.8							

Verifica di stabilità per pressoflessione §C.4.2.4.1.3.3.2 NTC18

X	Comb.	Sfruttamento	Classe	NEd	NRk	Mx,Ed max	Mx,Rk	My,Ed max	My,Rk	χ,x	χ,y	kxx	kxy	kyx	kyy	χ,LT	Verifica
0	SLU 118	0.554	1	-36635.6	106746.1	75754.2	674922.6	4.7	323595.1	0.947	0.803	0.427	0.298	0.835	0.497	0.934	Si

Verifica di stabilità per pressoflessione SLD §C.4.2.4.1.3.3.2 NTC18

X	Comb.	Sfruttamento	Classe	NEd	NRk	Mx,Ed max	Mx,Rk	My,Ed max	My,Rk	χ,x	χ,y	kxx	kxy	kyx	kyy	χ,LT	Verifica
0	SLD 12	0.089	1	-4898.9	106746.1	5424.9	674922.6	7613.7	323595.1	0.947	0.803	0.629	0.49	0.991	0.817	0.934	Si

Verifica di stabilità a taglio anima Y §4.2.4.1.2.4 [4.2.27] NTC18

η	hw	tw	hw/tw max	Verifica
1.2	13.4	0.6	55.46	Si

Verifica di stabilità a taglio anima Y SLD §4.2.4.1.2.4 [4.2.27] NTC18

η	hw	tw	hw/tw max	Verifica
1.2	13.4	0.6	55.46	Si

Verifiche a deformabilità

Mensola X: No; Mensola Y: No.

Frecce lungo X

Ascissa freccia	Combinazione	Freccia	Luce	L/f	L/f,min	Tipo	Verifica
124.6	SLE RA 1	0	196.8	10000	250	Totale	Si
137.8	SLE RA 31	0	196.8	10000	250	Totale	Si
131.2	SLE RA 30	0	196.8	10000	250	Totale	Si
137.8	SLE RA 29	0	196.8	10000	250	Totale	Si
131.2	SLE RA 28	0	196.8	10000	250	Totale	Si
91.8	SLE RA 2	0	196.8	10000	350	Variabile	Si
59	SLE RA 31	0	196.8	10000	350	Variabile	Si
137.8	SLE RA 30	0	196.8	10000	350	Variabile	Si
59	SLE RA 29	0	196.8	10000	350	Variabile	Si
137.8	SLE RA 28	0	196.8	10000	350	Variabile	Si

Frecce lungo Y

Ascissa freccia	Combinazione	Freccia	Luce	L/f	L/f,min	Tipo	Verifica
131.2	SLE RA 19	-0.021	196.8	9168.3	250	Totale	Si
131.2	SLE RA 18	-0.021	196.8	9207	250	Totale	Si
131.2	SLE RA 7	-0.021	196.8	9218.1	250	Totale	Si
131.2	SLE RA 6	-0.021	196.8	9257.2	250	Totale	Si
131.2	SLE RA 15	-0.021	196.8	9295.2	250	Totale	Si
131.2	SLE RA 2	-0.017	196.8	10000	350	Variabile	Si
131.2	SLE RA 31	-0.013	196.8	10000	350	Variabile	Si
131.2	SLE RA 30	-0.001	196.8	10000	350	Variabile	Si
131.2	SLE RA 29	-0.013	196.8	10000	350	Variabile	Si
131.2	SLE RA 28	0	196.8	10000	350	Variabile	Si

Superelemento in acciaio composto dall'asta 245

Caratteristiche del materiale

Acciaio: S275, fyk = 2750

Caratteristiche geometriche

Lunghezza: 196.8
Nodo iniziale: 54 Nodo finale: 120
Cerniera iniziale: No Cerniera finale: No
Sovraresistenza: 0% Sisma Z: No

Caratteristiche della sezione

Sezione	Rotazione	Area	Jx	Jy	ix	iy	Wx	Wy	Wplx	Wply
HEA160	0	38.82	1674.7	615.62	6.57	3.98	220.36	76.95	245.43	117.67

Verifiche di resistenza

Verifiche a forza assiale §4.2.4.1.2.1 - §4.2.4.1.2.2 NTC18

X	Comb.	Sfruttamento	Classe	NEd	Nc,Rd	Nt,Rd	Riduzione da taglio	ρx	ρy	Verifica
0	SLU 85	0.36	1	-36630.9	101662.9		1	0	0	Si

Verifiche a forza assiale SLD §4.2.4.1.2.1 - §4.2.4.1.2.2 NTC18

X	Comb.	Sfruttamento	Classe	NEd	Nc,Rd	Nt,Rd	Riduzione da taglio	ρx	ρy	Verifica
0	SLD 3	0.056	1	-5732.7	101662.9		1	0	0	Si

Verifica a taglio X §4.2.4.1.2.4 NTC18

X	Comb.	Sfruttamento	VEd	Vc,Rd	Av	Interazione taglio-torsione	Riduzione torsione	Verifica
196.8	SLV 8	0.001	-53.1	46333.5	30.78	Considerata	1	Si

Verifica a taglio Y §4.2.4.1.2.4 NTC18

X	Comb.	Sfruttamento	VEd	Vc,Rd	Av	Interazione taglio-torsione	Riduzione torsione	Verifica
0	SLU 85	0.031	623.7	20045.7	13.26	Considerata	1	Si

Verifica a taglio Y SLD §4.2.4.1.2.4 NTC18

X	Comb.	Sfruttamento	VEd	Vc,Rd	Av	Interazione taglio-torsione	Riduzione torsione	Verifica
0	SLD 3	0.004	73	20035.7	13.26	Considerata	1	Si

Verifica a torsione §4.2.4.1.2.5 NTC18

X	Comb.	Sfruttamento torsione	TEd	TRd	Riduzione taglio resistente	Sfruttamento taglio-torsione	τEd,totale	τRd	Verifica
105	SLV 5	0.011	160.9	14685.6	Considerata				Si

Verifica a torsione SLD §4.2.4.1.2.5 NTC18

X	Comb.	Sfruttamento torsione	TEd	TRd	Riduzione taglio resistente	Sfruttamento taglio-torsione	τEd,totale	τRd	Verifica
105	SLD 5	0.004	61	14685.6	Considerata				Si

Verifica a presso/tenso flessione retta X §§ 4.2.4.1.2.3 - 4.2.4.1.2.6 - 4.2.4.1.2.7 - 4.2.4.1.2.8 NTC18

Verifiche eseguite utilizzando la formula conservativa (6.2) §6.2.1 EN 1993-1-1:2005.

X	Comb.	Sfruttamento	Classe	NEd	NRd	Rid. NRd da VEd	Mx,Ed	Mx,Rd	Rid. Mx,Rd da VEd	Rid. Mx,Rd da NEd	ρx	ρy	Verifica
196.8	SLU 118	0.478	1	-36591.3	101662.9	1	-75781	642783	1		0	0	Si

Verifica a presso/tenso flessione retta Y §§ 4.2.4.1.2.3 - 4.2.4.1.2.6 - 4.2.4.1.2.7 - 4.2.4.1.2.8 NTC18

Verifiche eseguite utilizzando la formula conservativa (6.2) §6.2.1 EN 1993-1-1:2005.

X	Comb.	Sfruttamento	Classe	NEd	NRd	Rid. NRd da VEd	My,Ed	My,Rd	Rid. My,Rd da VEd	Rid. My,Rd da NEd	ρx	ρy	Verifica
45.9	SLV 5	0.091	1	-5304.4	101662.9	1	12072	308186	1		0	0	Si

Verifica a presso/tenso flessione retta Y SLD §§ 4.2.4.1.2.3 - 4.2.4.1.2.6 - 4.2.4.1.2.7 - 4.2.4.1.2.8 NTC18

Verifiche eseguite utilizzando la formula conservativa (6.2) §6.2.1 EN 1993-1-1:2005.

X	Comb.	Sfruttamento	Classe	NEd	NRd	Rid. NRd da VEd	My,Ed	My,Rd	Rid. My,Rd da VEd	Rid. My,Rd da NEd	ρx	ρy	Verifica
39.4	SLD 5	0.063	1	-4892.8	101662.9	1	4446	308186	1		0	0	Si

Verifica a presso/tenso flessione deviata §§ 4.2.4.1.2.3 - 4.2.4.1.2.6 - 4.2.4.1.2.7 - 4.2.4.1.2.8 NTC18

Verifiche eseguite utilizzando la formula conservativa (6.2) §6.2.1 EN 1993-1-1:2005.

X	Comb.	Sfruttamento	Classe	NEd	NRd	Rid. NRd da VEd	Mx,Ed	Mx,Rd	My,Ed	My,Rd	Rid. Mx,Rd da VEd	Rid. Mx,Rd da NEd	Rid. My,Rd da VEd	Rid. My,Rd da NEd	α	β	ρx	ρy	Verifica
196.8	SLV 8	0.126	1	-5281.1	101662.9	1	-5756	642783	-20076	308186	1		1				0	0	Si

Verifica a presso/tenso flessione deviata SLD §§ 4.2.4.1.2.3 - 4.2.4.1.2.6 - 4.2.4.1.2.7 - 4.2.4.1.2.8 NTC18

Verifiche eseguite utilizzando la formula conservativa (6.2) §6.2.1 EN 1993-1-1:2005.

X	Comb.	Sfruttamento	Classe	NEd	NRd	Rid. NRd da VEd	Mx,Ed	Mx,Rd	My,Ed	My,Rd	Rid. Mx,Rd da VEd	Rid. Mx,Rd da NEd	Rid. My,Rd da VEd	Rid. My,Rd da NEd	α	β	ρx	ρy	Verifica
196.8	SLD 8	0.081	1	-4868.5	101662.9	1	-5425	642783	-7614	308186	1		1				0	0	Si

Verifiche ad instabilità

Caratteristiche iniziali

Membratura principale per controllo snellezza; Calcolo di snellezze ed N critici condotti secondo gli assi principali;
Curva X: b; Curva Y: c; Svergolamento: Carico all'estradosso; Curva svergolamento: b;

Dati per instabilità attorno a x

Numero rit.	Presente	Ascissa	Campata	βx/m	Vincolo a entrambi estremi	λx/m	λVer
1	Si	0					
			1-2	1	Si	30	Si, (<200)
2	Si	196.8					

Dati per instabilità attorno a y

Numero rit.	Presente	Ascissa	Campata	βy/n	k,LT	kw,LT	Vincolo a entrambi estremi	λy/n	λVer
1	Si	0							
			1-2	1	1	1	Si	49.4	Si, (<200)
2	Si	196.8							

Verifica di stabilità per pressoflessione §C.4.2.4.1.3.3.2 NTC18

X	Comb.	Sfruttamento	Classe	NEd	NRk	Mx,Ed max	Mx,Rk	My,Ed max	My,Rk	χ,x	χ,y	kxx	kxy	kyx	kyy	χ,LT	Verifica
0	SLU 85	0.554	1	-36630.9	106746.1	75780.6	674922.6	4.7	323595.1	0.947	0.803	0.427	0.298	0.835	0.497	0.934	Si

Verifica di stabilità per pressoflessione SLD §C.4.2.4.1.3.3.2 NTC18

X	Comb.	Sfruttamento	Classe	NEd	NRk	Mx,Ed max	Mx,Rk	My,Ed max	My,Rk	χ,x	χ,y	kxx	kxy	kyx	kyy	χ,LT	Verifica
0	SLD 7	0.089	1	-4898.9	106746.1	5424.9	674922.6	7613.7	323595.1	0.947	0.803	0.629	0.49	0.991	0.817	0.934	Si

Verifica di stabilità a taglio anima Y §4.2.4.1.2.4 [4.2.27] NTC18

η	hw	tw	hw/tw max	Verifica
1.2	13.4	0.6	55.46	Si

Verifica di stabilità a taglio anima Y SLD §4.2.4.1.2.4 [4.2.27] NTC18

η	hw	tw	hw/tw max	Verifica
1.2	13.4	0.6	55.46	Si

Verifiche a deformabilità

Mensola X: No; Mensola Y: No.

Frecce lungo X

Ascissa freccia	Combinazione	Freccia	Luce	L/f	L/f,min	Tipo	Verifica
124.6	SLE RA 1	0	196.8	10000	250	Totale	Si
137.8	SLE RA 31	0	196.8	10000	250	Totale	Si
131.2	SLE RA 30	0	196.8	10000	250	Totale	Si
137.8	SLE RA 29	0	196.8	10000	250	Totale	Si
131.2	SLE RA 28	0	196.8	10000	250	Totale	Si
91.8	SLE RA 2	0	196.8	10000	350	Variabile	Si
59	SLE RA 31	0	196.8	10000	350	Variabile	Si
137.8	SLE RA 30	0	196.8	10000	350	Variabile	Si
59	SLE RA 29	0	196.8	10000	350	Variabile	Si
137.8	SLE RA 28	0	196.8	10000	350	Variabile	Si

Frecce lungo Y

Ascissa freccia	Combinazione	Freccia	Luce	L/f	L/f,min	Tipo	Verifica
131.2	SLE RA 19	-0.021	196.8	9164.2	250	Totale	Si
131.2	SLE RA 18	-0.021	196.8	9202.9	250	Totale	Si
131.2	SLE RA 7	-0.021	196.8	9216.6	250	Totale	Si
131.2	SLE RA 6	-0.021	196.8	9255.7	250	Totale	Si
131.2	SLE RA 15	-0.021	196.8	9292.6	250	Totale	Si
131.2	SLE RA 2	-0.017	196.8	10000	350	Variabile	Si
131.2	SLE RA 31	-0.013	196.8	10000	350	Variabile	Si
131.2	SLE RA 30	-0.001	196.8	10000	350	Variabile	Si
131.2	SLE RA 29	-0.013	196.8	10000	350	Variabile	Si
131.2	SLE RA 28	0	196.8	10000	350	Variabile	Si

Superelemento in acciaio composto dall'asta 246

Caratteristiche del materiale

Acciaio: S275, fyk = 2750

Caratteristiche geometriche

Lunghezza: 100
Nodo iniziale: 28 Nodo finale: 24
Cerniera iniziale: No Cerniera finale: Svincolo: M2, M3
Sovraresistenza: 0% Sisma Z: No

Caratteristiche della sezione

Sezione	Rotazione	Area	Jx	Jy	ix	iy	Wx	Wy	Wplx	Wply
HEA160	0	38.82	1674.7	615.62	6.57	3.98	220.36	76.95	245.43	117.67

Verifiche di resistenza

Verifiche a forza assiale §4.2.4.1.2.1 - §4.2.4.1.2.2 NTC18

X	Comb.	Sfruttamento	Classe	NEd	Nc,Rd	Nt,Rd	Riduzione da taglio	ρx	ρy	Verifica
46.7	SLU 98	0.022		2224.5		101662.9	1	0	0	Si

Verifiche a forza assiale SLD §4.2.4.1.2.1 - §4.2.4.1.2.2 NTC18

X	Comb.	Sfruttamento	Classe	NEd	Nc,Rd	Nt,Rd	Riduzione da taglio	ρx	ρy	Verifica
93.3	SLD 10	0.012		1253.1		101662.9	1	0	0	Si

Verifica a taglio Y §4.2.4.1.2.4 NTC18

X	Comb.	Sfruttamento	VEd	Vc,Rd	Av	Interazione taglio-torsione	Riduzione torsione	Verifica
100	SLU 99	0.014	-275.4	20045.7	13.26	Considerata	1	Si

Verifica a taglio Y SLD §4.2.4.1.2.4 NTC18

X	Comb.	Sfruttamento	VEd	Vc,Rd	Av	Interazione taglio-torsione	Riduzione torsione	Verifica
100	SLD 16	0.002	-30.5	20045.7	13.26	Considerata	1	Si

Verifica a presso/tenso flessione retta X §§ 4.2.4.1.2.3 - 4.2.4.1.2.6 - 4.2.4.1.2.7 - 4.2.4.1.2.8 NTC18

Verifiche eseguite utilizzando la formula conservativa (6.2) §6.2.1 EN 1993-1-1:2005.

X	Comb.	Sfruttamento	Classe	NEd	NRd	Rid. NRd da VEd	Mx,Ed	Mx,Rd	Rid. Mx,Rd da VEd	Rid. Mx,Rd da NEd	ρx	ρy	Verifica
0	SLU 98	0.045	1	2224.5	101662.9	1	-14779	642783	1		0	0	Si

Verifica a presso/tenso flessione retta X SLD §§ 4.2.4.1.2.3 - 4.2.4.1.2.6 - 4.2.4.1.2.7 - 4.2.4.1.2.8 NTC18

Verifiche eseguite utilizzando la formula conservativa (6.2) §6.2.1 EN 1993-1-1:2005.

X	Comb.	Sfruttamento	Classe	NEd	NRd	Rid. NRd da VEd	Mx,Ed	Mx,Rd	Rid. Mx,Rd da VEd	Rid. Mx,Rd da NEd	ρx	ρy	Verifica
0	SLD 10	0.015	1	1253.1	101662.9	1	-1524	642783	1		0	0	Si

Verifica a presso/tenso flessione deviata §§ 4.2.4.1.2.3 - 4.2.4.1.2.6 - 4.2.4.1.2.7 - 4.2.4.1.2.8 NTC18

Verifiche eseguite utilizzando la formula conservativa (6.2) §6.2.1 EN 1993-1-1:2005.

X	Comb.	Sfruttamento	Classe	NEd	NRd	Rid. NRd da VEd	Mx,Ed	Mx,Rd	My,Ed	My,Rd	Rid. Mx,Rd da VEd	Rid. Mx,Rd da NEd	Rid. My,Rd da VEd	Rid. My,Rd da NEd	α	β	ρx	ρy	Verifica
0	SLV 13	0.015	1	1252.5	101662.9	1	-1524	642783	231	308186	1		1				0	0	Si

Verifica a presso/tenso flessione deviata SLD §§ 4.2.4.1.2.3 - 4.2.4.1.2.6 - 4.2.4.1.2.7 - 4.2.4.1.2.8 NTC18

Verifiche eseguite utilizzando la formula conservativa (6.2) §6.2.1 EN 1993-1-1:2005.

X	Comb.	Sfruttamento	Classe	NEd	NRd	Rid. NRd da VEd	Mx,Ed	Mx,Rd	My,Ed	My,Rd	Rid. Mx,Rd da VEd	Rid. Mx,Rd da NEd	Rid. My,Rd da VEd	Rid. My,Rd da NEd	α	β	ρx	ρy	Verifica
0	SLD 13	0.015	1	1222.7	101662.9	1	-1524	642783	104	308186	1		1				0	0	Si

Verifiche ad instabilità

Caratteristiche iniziali

Membratura principale per controllo snellezza; Calcolo di snellezze ed N critici condotti secondo gli assi principali;
Curva X: b; Curva Y: c; Svergolamento: Carico all'estradosso; Curva svergolamento: b;

Dati per instabilità attorno a x

Numero rit.	Presente	Ascissa	Campata	βx/m	Vincolo a entrambi estremi	λx/m	λVer
1	Si	0					
			1-2	1	Si	15.2	Si, (<200)
2	Si	100					

Dati per instabilità attorno a y

Numero rit.	Presente	Ascissa	Campata	βy/n	k,LT	kw,LT	Vincolo a entrambi estremi	λy/n	λVer
1	Si	0							
			1-2	1	1	1	Si	25.1	Si, (<200)
2	Si	100							

Verifica a svergolamento con trazione §4.2.4.1.3.2 NTC18 - §5.5.3 ENV 1993-1-1:1994

X	Comb.	Sfruttamento	Classe	Obblig.	NEd	Mx,Ed	Mx,Eff,Ed	Mb,Rd,x	χ,LT	λ adim. LT	L,LT	M,critico	Verifica
0	SLU 31	0.011	1	Si	1863.5	-14321.7	-6916.5	642783.4	1	0.193	100	18039334.6	Si

Verifica di stabilità a taglio anima Y §4.2.4.1.2.4 [4.2.27] NTC18

η	hw	tw	hw/tw max	Verifica
1.2	13.4	0.6	55.46	Si

Verifica di stabilità a taglio anima Y SLD §4.2.4.1.2.4 [4.2.27] NTC18

η	hw	tw	hw/tw max	Verifica
1.2	13.4	0.6	55.46	Si

Verifiche a deformabilità

Mensola X: No; Mensola Y: No.

Frecce lungo X

Ascissa freccia	Combinazione	Freccia	Luce	L/f	L/f,min	Tipo	Verifica
90	SLE RA 1	0	100	10000	250	Totale	Si
10	SLE RA 31	0	100	10000	250	Totale	Si
10	SLE RA 30	0	100	10000	250	Totale	Si
10	SLE RA 29	0	100	10000	250	Totale	Si
10	SLE RA 28	0	100	10000	250	Totale	Si
93.3	SLE RA 2	0	100	10000	350	Variabile	Si
10	SLE RA 31	0	100	10000	350	Variabile	Si
10	SLE RA 30	0	100	10000	350	Variabile	Si
10	SLE RA 29	0	100	10000	350	Variabile	Si
10	SLE RA 28	0	100	10000	350	Variabile	Si

Frecce lungo Y

Ascissa freccia	Combinazione	Freccia	Luce	L/f	L/f,min	Tipo	Verifica
46.7	SLE RA 1	0	100	10000	250	Totale	Si
43.3	SLE RA 31	-0.003	100	10000	250	Totale	Si
43.3	SLE RA 30	-0.003	100	10000	250	Totale	Si
43.3	SLE RA 29	-0.002	100	10000	250	Totale	Si
43.3	SLE RA 28	-0.002	100	10000	250	Totale	Si
83.3	SLE RA 2	0	100	10000	350	Variabile	Si
43.3	SLE RA 31	-0.002	100	10000	350	Variabile	Si
43.3	SLE RA 30	-0.002	100	10000	350	Variabile	Si
43.3	SLE RA 29	-0.002	100	10000	350	Variabile	Si
43.3	SLE RA 28	-0.002	100	10000	350	Variabile	Si

Superelemento in acciaio composto dall'asta 247

Caratteristiche del materiale

Acciaio: S275, fyk = 2750

Caratteristiche geometriche

Lunghezza: 227.6
Nodo iniziale: 5 Nodo finale: 27
Cerniera iniziale: Svincolo: M2, M3 Cerniera finale: Svincolo: M2, M3
Sovraresistenza: 0% Sisma Z: No

Caratteristiche della sezione

Sezione	Rotazione	Area	Jx	Jy	ix	iy	Wx	Wy	Wplx	Wply
UPN200	0	32.19	1911.41	147.68	7.71	2.14	191.14	26.92	227.82	51.87

Verifiche di resistenza

Verifiche a forza assiale §4.2.4.1.2.1 - §4.2.4.1.2.2 NTC18

X	Comb.	Sfruttamento	Classe	NEd	Nc,Rd	Nt,Rd	Riduzione da taglio	ρx	ρy	Verifica
0	SLU 131	0.032	1	-2659.9	84315.5		1	0	0	Si

Verifiche a forza assiale SLD §4.2.4.1.2.1 - §4.2.4.1.2.2 NTC18

X	Comb.	Sfruttamento	Classe	NEd	Nc,Rd	Nt,Rd	Riduzione da taglio	ρx	ρy	Verifica
0	SLD 8	0.018	1	-1545.5	84315.5		1	0	0	Si

Verifica a taglio Y §4.2.4.1.2.4 NTC18

X	Comb.	Sfruttamento	VEd	Vc,Rd	Av	Interazione taglio-torsione	Riduzione torsione	Verifica
0	SLU 97	0.009	239.5	26073.6	17.24	Considerata	1	Si

Verifica a taglio Y SLD §4.2.4.1.2.4 NTC18

X	Comb.	Sfruttamento	VEd	Vc,Rd	Av	Interazione taglio-torsione	Riduzione torsione	Verifica
227.6	SLD 8	0.001	-25.8	26038.1	17.24	Considerata	1	Si

Verifica a torsione §4.2.4.1.2.5 NTC18

X	Comb.	Sfruttamento torsione	TEd	TRd	Riduzione taglio resistente	Sfruttamento taglio-torsione	τEd,totale	τRd	Verifica
227.6	SLV 8	0.008	-112.8	14125.9	Considerata				Si

Verifica a torsione SLD §4.2.4.1.2.5 NTC18

X	Comb.	Sfruttamento torsione	TEd	TRd	Riduzione taglio resistente	Sfruttamento taglio-torsione	τEd,totale	τRd	Verifica
227.6	SLD 8	0.003	-48	14125.9	Considerata				Si

Verifica a presso/tenso flessione retta X §§ 4.2.4.1.2.3 - 4.2.4.1.2.6 - 4.2.4.1.2.7 - 4.2.4.1.2.8 NTC18

Verifiche eseguite utilizzando la formula conservativa (6.2) §6.2.1 EN 1993-1-1:2005.

X	Comb.	Sfruttamento	Classe	NEd	NRd	Rid. NRd da VEd	Mx,Ed	Mx,Rd	Rid. Mx,Rd da VEd	Rid. Mx,Rd da NEd	ρx	ρy	Verifica
98.6	SLU 98	0.051	1	-2549.6	84315.5	1	-12516	596667	1		0	0	Si

Verifica a presso/tenso flessione retta X SLD §§ 4.2.4.1.2.3 - 4.2.4.1.2.6 - 4.2.4.1.2.7 - 4.2.4.1.2.8 NTC18

Verifiche eseguite utilizzando la formula conservativa (6.2) §6.2.1 EN 1993-1-1:2005.

X	Comb.	Sfruttamento	Classe	NEd	NRd	Rid. NRd da VEd	Mx,Ed	Mx,Rd	Rid. Mx,Rd da VEd	Rid. Mx,Rd da NEd	ρx	ρy	Verifica
113.8	SLD 7	0.021	1	-1532.8	84315.5	1	-1470	596667	1		0	0	Si

Verifiche ad instabilità

Caratteristiche iniziali

Membratura principale per controllo snellezza; Calcolo di snellezze ed N critici condotti secondo gli assi principali;
Curva X: c; Curva Y: c;
Svergolamento: Nessuno; la verifica a instabilità flesso-torsionale (svergolamento) non verrà eseguita.

Dati per instabilità attorno a x

Numero rit.	Presente	Ascissa	Campata	βx/m	Vincolo a entrambi estremi	λx/m	λVer
1	Si	0					
			1-2	1	Si	29.5	Si, (<200)
2	Si	227.6					

Dati per instabilità attorno a y

Numero rit.	Presente	Ascissa	Campata	βy/n	k,LT	kw,LT	Vincolo a entrambi estremi
1	Si	0					
			1-2	1	Si	106.3	Si, (<200)
2	Si	227.6					

Verifica di stabilità per pressoflessione §C.4.2.4.1.3.3.1 NTC18

X	Comb.	Sfruttamento	Classe	NEd	MxEq,Ed	MyEq,Ed	Area	Wx	Wy	χ,min	λ adim. x/m	λ adim. y/n	N,crit x/m	N,crit y/n	Verifica
0	SLU 98	0.093	1	-2659.9	-11000	0	32.19	227.8	51.9	0.422	0.34	1.224	764699.9	59081.4	Si

Verifica di stabilità per pressoflessione SLD §C.4.2.4.1.3.3.1 NTC18

X	Comb.	Sfruttamento	Classe	NEd	MxEq,Ed	MyEq,Ed	Area	Wx	Wy	χ,min	λ adim. x/m	λ adim. y/n	N,crit x/m	N,crit y/n	Verifica
0	SLD 8	0.046	1	-1545.5	-1273	0	32.19	227.8	51.9	0.422	0.34	1.224	764699.9	59081.4	Si

Verifica di stabilità a taglio anima Y §4.2.4.1.2.4 [4.2.27] NTC18

η	hw	tw	hw/tw max	Verifica
1.2	17.2	0.9	55.46	Si

Verifica di stabilità a taglio anima Y SLD §4.2.4.1.2.4 [4.2.27] NTC18

η	hw	tw	hw/tw max	Verifica
1.2	17.2	0.9	55.46	Si

Verifiche a deformabilità

Mensola X: No; Mensola Y: No.

Frecce lungo X

Ascissa freccia	Combinazione	Freccia	Luce	L/f	L/f,min	Tipo	Verifica
212.4	SLE RA 1	0	227.6	10000	250	Totale	Si
204.8	SLE RA 31	0	227.6	10000	250	Totale	Si
204.8	SLE RA 30	0	227.6	10000	250	Totale	Si
204.8	SLE RA 29	0	227.6	10000	250	Totale	Si
204.8	SLE RA 28	0	227.6	10000	250	Totale	Si
212.4	SLE RA 2	0	227.6	10000	350	Variabile	Si
189.7	SLE RA 31	0	227.6	10000	350	Variabile	Si
189.7	SLE RA 30	0	227.6	10000	350	Variabile	Si
189.7	SLE RA 29	0	227.6	10000	350	Variabile	Si
189.7	SLE RA 28	0	227.6	10000	350	Variabile	Si

Frecce lungo Y

Ascissa freccia	Combinazione	Freccia	Luce	L/f	L/f,min	Tipo	Verifica
113.8	SLE RA 1	-0.002	227.6	10000	250	Totale	Si
113.8	SLE RA 31	-0.012	227.6	10000	250	Totale	Si
113.8	SLE RA 30	-0.012	227.6	10000	250	Totale	Si
113.8	SLE RA 29	-0.01	227.6	10000	250	Totale	Si
113.8	SLE RA 28	-0.01	227.6	10000	250	Totale	Si
220	SLE RA 2	0	227.6	10000	350	Variabile	Si
113.8	SLE RA 31	-0.01	227.6	10000	350	Variabile	Si
113.8	SLE RA 30	-0.01	227.6	10000	350	Variabile	Si
113.8	SLE RA 29	-0.008	227.6	10000	350	Variabile	Si
113.8	SLE RA 28	-0.008	227.6	10000	350	Variabile	Si

Superelemento in acciaio composto dall'asta 248

Caratteristiche del materiale

Acciaio: S275, fyk = 2750

Caratteristiche geometriche

Lunghezza: 227.6
Nodo iniziale: 3 Nodo finale: 32
Cerniera iniziale: Svincolo: M2, M3 Cerniera finale: Svincolo: M2, M3
Sovraresistenza: 0% Sisma Z: No

Caratteristiche della sezione

Sezione	Rotazione	Area	Jx	Jy	ix	iy	Wx	Wy	Wplx	Wply
UPN200	180	32.19	1911.41	147.68	7.71	2.14	191.14	26.92	227.82	51.87

Verifiche di resistenza

Verifiche a forza assiale §4.2.4.1.2.1 - §4.2.4.1.2.2 NTC18

X	Comb.	Sfruttamento	Classe	NEd	Nc,Rd	Nt,Rd	Riduzione da taglio	ρx	ρy	Verifica
0	SLU 130	0.077	1	-6534.3	84315.5		1	0	0	Si

Verifiche a forza assiale SLD §4.2.4.1.2.1 - §4.2.4.1.2.2 NTC18

X	Comb.	Sfruttamento	Classe	NEd	Nc,Rd	Nt,Rd	Riduzione da taglio	ρx	ρy	Verifica
0	SLD 5	0.035	1	-2939.1	84315.5		1	0	0	Si

Verifica a taglio Y §4.2.4.1.2.4 NTC18

X	Comb.	Sfruttamento	VEd	Vc,Rd	Av	Interazione taglio-torsione	Riduzione torsione	Verifica
0	SLU 96	0.009	-239.4	26060.9	17.24	Considerata	1	Si

Verifica a taglio Y SLD §4.2.4.1.2.4 NTC18

X	Comb.	Sfruttamento	VEd	Vc,Rd	Av	Interazione taglio-torsione	Riduzione torsione	Verifica
227.6	SLD 5	0.001	25.8	26036.7	17.24	Considerata	1	Si

Verifica a torsione §4.2.4.1.2.5 NTC18

X	Comb.	Sfruttamento torsione	TEd	TRd	Riduzione taglio resistente	Sfruttamento taglio-torsione	τEd,totale	τRd	Verifica
113.8	SLV 6	0.008	119.6	14125.9	Considerata				Si

Verifica a torsione SLD §4.2.4.1.2.5 NTC18

X	Comb.	Sfruttamento torsione	TEd	TRd	Riduzione taglio resistente	Sfruttamento taglio-torsione	τEd,totale	τRd	Verifica
227.6	SLD 6	0.004	49.9	14125.9	Considerata				Si

Verifica a presso/tenso flessione retta X §§ 4.2.4.1.2.3 - 4.2.4.1.2.6 - 4.2.4.1.2.7 - 4.2.4.1.2.8 NTC18

Verifiche eseguite utilizzando la formula conservativa (6.2) §6.2.1 EN 1993-1-1:2005.

X	Comb.	Sfruttamento	Classe	NEd	NRd	Rid. NRd da VEd	Mx,Ed	Mx,Rd	Rid. Mx,Rd da VEd	Rid. Mx,Rd da NEd	ρx	ρy	Verifica
98.6	SLU 130	0.097	1	-6424.1	84315.5	1	12507	596667	1		0	0	Si

Verifica a presso/tenso flessione retta X SLD §§ 4.2.4.1.2.3 - 4.2.4.1.2.6 - 4.2.4.1.2.7 - 4.2.4.1.2.8 NTC18

Verifiche eseguite utilizzando la formula conservativa (6.2) §6.2.1 EN 1993-1-1:2005.

X	Comb.	Sfruttamento	Classe	NEd	NRd	Rid. NRd da VEd	Mx,Ed	Mx,Rd	Rid. Mx,Rd da VEd	Rid. Mx,Rd da NEd	ρx	ρy	Verifica
113.8	SLD 6	0.037	1	-2926.5	84315.5	1	1470	596667	1		0	0	Si

Verifiche ad instabilità

Caratteristiche iniziali

Membratura principale per controllo snellezza; Calcolo di snellezze ed N critici condotti secondo gli assi principali;
Curva X: c; Curva Y: c;
Svergolamento: Nessuno; la verifica a instabilità flesso-torsionale (svergolamento) non verrà eseguita.

Dati per instabilità attorno a x

Numero rit.	Presente	Ascissa	Campata	βx/m	Vincolo a entrambi estremi	λx/m	λVer
1	Si	0					
			1-2	1	Si	29.5	Si, (<200)
2	Si	227.6					

Dati per instabilità attorno a y

Numero rit.	Presente	Ascissa	Campata	βy/n	k,LT	kw,LT	Vincolo a entrambi estremi
1	Si	0					
			1-2	1	Si	106.3	Si, (<200)
2	Si	227.6					

Verifica di stabilità per pressoflessione §C.4.2.4.1.3.3.1 NTC18

X	Comb.	Sfruttamento	Classe	NEd	MxEq,Ed	MyEq,Ed	Area	Wx	Wy	χ,min	λ adim. x/m	λ adim. y/n	N,crit x/m	N,crit y/n	Verifica
0	SLU 130	0.202	1	-6534.3	10988	0	32.19	227.8	51.9	0.422	0.34	1.224	764699.9	59081.4	Si

Verifica di stabilità per pressoflessione SLD §C.4.2.4.1.3.3.1 NTC18

X	Comb.	Sfruttamento	Classe	NEd	MxEq,Ed	MyEq,Ed	Area	Wx	Wy	χ,min	λ adim. x/m	λ adim. y/n	N,crit x/m	N,crit y/n	Verifica
0	SLD 5	0.085	1	-2939.1	1273	0	32.19	227.8	51.9	0.422	0.34	1.224	764699.9	59081.4	Si

Verifica di stabilità a taglio anima Y §4.2.4.1.2.4 [4.2.27] NTC18

η	hw	tw	hw/tw max	Verifica
1.2	17.2	0.9	55.46	Si

Verifica di stabilità a taglio anima Y SLD §4.2.4.1.2.4 [4.2.27] NTC18

η	hw	tw	hw/tw max	Verifica
1.2	17.2	0.9	55.46	Si

Verifiche a deformabilità

Mensola X: No; Mensola Y: No.

Frecce lungo X

Ascissa freccia	Combinazione	Freccia	Luce	L/f	L/f,min	Tipo	Verifica
212.4	SLE RA 1	0	227.6	10000	250	Totale	Si
220	SLE RA 31	0	227.6	10000	250	Totale	Si
220	SLE RA 30	0	227.6	10000	250	Totale	Si
220	SLE RA 29	0	227.6	10000	250	Totale	Si
220	SLE RA 28	0	227.6	10000	250	Totale	Si
166.9	SLE RA 2	0	227.6	10000	350	Variabile	Si
220	SLE RA 31	0	227.6	10000	350	Variabile	Si
220	SLE RA 30	0	227.6	10000	350	Variabile	Si
182.1	SLE RA 29	0	227.6	10000	350	Variabile	Si
182.1	SLE RA 28	0	227.6	10000	350	Variabile	Si

Frecce lungo Y

Ascissa freccia	Combinazione	Freccia	Luce	L/f	L/f,min	Tipo	Verifica
113.8	SLE RA 1	0.002	227.6	10000	250	Totale	Si
113.8	SLE RA 31	0.012	227.6	10000	250	Totale	Si
113.8	SLE RA 30	0.012	227.6	10000	250	Totale	Si
113.8	SLE RA 29	0.01	227.6	10000	250	Totale	Si
113.8	SLE RA 28	0.01	227.6	10000	250	Totale	Si
182.1	SLE RA 2	0	227.6	10000	350	Variabile	Si
113.8	SLE RA 31	0.01	227.6	10000	350	Variabile	Si
113.8	SLE RA 30	0.01	227.6	10000	350	Variabile	Si
113.8	SLE RA 29	0.008	227.6	10000	350	Variabile	Si
113.8	SLE RA 28	0.008	227.6	10000	350	Variabile	Si

Superelemento in acciaio composto dall'asta 249

Caratteristiche del materiale

Acciaio: S275, fyk = 2750

Caratteristiche geometriche

Lunghezza: 227.6
Nodo iniziale: 7 Nodo finale: 32
Cerniera iniziale: Svincolo: M2, M3 Cerniera finale: Svincolo: M2, M3
Sovraresistenza: 0% Sisma Z: No

Caratteristiche della sezione

Sezione	Rotazione	Area	Jx	Jy	ix	iy	Wx	Wy	Wplx	Wply
UPN200	0	32.19	1911.41	147.68	7.71	2.14	191.14	26.92	227.82	51.87

Verifiche di resistenza

Verifiche a forza assiale §4.2.4.1.2.1 - §4.2.4.1.2.2 NTC18

X	Comb.	Sfruttamento	Classe	NEd	Nc,Rd	Nt,Rd	Riduzione da taglio	ρx	ρy	Verifica
0	SLU 131	0.058	1	-4925.9	84315.5		1	0	0	Si

Verifiche a forza assiale SLD §4.2.4.1.2.1 - §4.2.4.1.2.2 NTC18

X	Comb.	Sfruttamento	Classe	NEd	Nc,Rd	Nt,Rd	Riduzione da taglio	ρx	ρy	Verifica
0	SLD 8	0.025	1	-2068.6	84315.5		1	0	0	Si

Verifica a taglio Y §4.2.4.1.2.4 NTC18

X	Comb.	Sfruttamento	VEd	Vc,Rd	Av	Interazione taglio-torsione	Riduzione torsione	Verifica
0	SLU 131	0.009	238.4	26064.2	17.24	Considerata	1	Si

Verifica a taglio Y SLD §4.2.4.1.2.4 NTC18

X	Comb.	Sfruttamento	VEd	Vc,Rd	Av	Interazione taglio-torsione	Riduzione torsione	Verifica
227.6	SLD 8	0.001	-25.8	26039.5	17.24	Considerata	1	Si

Verifica a torsione §4.2.4.1.2.5 NTC18

X	Comb.	Sfruttamento torsione	TEd	TRd	Riduzione taglio resistente	Sfruttamento taglio-torsione	τEd,totale	τRd	Verifica
227.6	SLV 8	0.008	-111.5	14125.9	Considerata				Si

Verifica a torsione SLD §4.2.4.1.2.5 NTC18

X	Comb.	Sfruttamento torsione	TEd	TRd	Riduzione taglio resistente	Sfruttamento taglio-torsione	τEd,totale	τRd	Verifica
212.4	SLD 8	0.003	-46.1	14125.9	Considerata				Si

Verifica a presso/tenso flessione retta X §§ 4.2.4.1.2.3 - 4.2.4.1.2.6 - 4.2.4.1.2.7 - 4.2.4.1.2.8 NTC18

Verifiche eseguite utilizzando la formula conservativa (6.2) §6.2.1 EN 1993-1-1:2005.

X	Comb.	Sfruttamento	Classe	NEd	NRd	Rid. NRd da VEd	Mx,Ed	Mx,Rd	Rid. Mx,Rd da VEd	Rid. Mx,Rd da NEd	ρx	ρy	Verifica
98.6	SLU 98	0.078	1	-4815.6	84315.5	1	-12404	596667	1		0	0	Si

Verifica a presso/tenso flessione retta X SLD §§ 4.2.4.1.2.3 - 4.2.4.1.2.6 - 4.2.4.1.2.7 - 4.2.4.1.2.8 NTC18

Verifiche eseguite utilizzando la formula conservativa (6.2) §6.2.1 EN 1993-1-1:2005.

X	Comb.	Sfruttamento	Classe	NEd	NRd	Rid. NRd da VEd	Mx,Ed	Mx,Rd	Rid. Mx,Rd da VEd	Rid. Mx,Rd da NEd	ρx	ρy	Verifica
113.8	SLD 8	0.027	1	-2055.9	84315.5	1	-1470	596667	1		0	0	Si

Verifiche ad instabilità

Caratteristiche iniziali

Membratura principale per controllo snellezza; Calcolo di snellezze ed N critici condotti secondo gli assi principali;
Curva X: c; Curva Y: c;
Svergolamento: Nessuno; la verifica a instabilità flesso-torsionale (svergolamento) non verrà eseguita.

Dati per instabilità attorno a x

Numero rit.	Presente	Ascissa	Campata	βx/m	Vincolo a entrambi estremi	λx/m	λVer
1	Si	0					
			1-2	1	Si	29.5	Si, (<200)
2	Si	227.6					

Dati per instabilità attorno a y

Numero rit.	Presente	Ascissa	Campata	βy/n	k,LT	kw,LT	Vincolo a entrambi estremi
1	Si	0					
			1-2	1	Si	106.3	Si, (<200)
2	Si	227.6					

Verifica di stabilità per pressoflessione §C.4.2.4.1.3.3.1 NTC18

X	Comb.	Sfruttamento	Classe	NEd	MxEq,Ed	MyEq,Ed	Area	Wx	Wy	χ,min	λ adim. x/m	λ adim. y/n	N,crit x/m	N,crit y/n	Verifica
0	SLU 98	0.157	1	-4925.9	-10842	0	32.19	227.8	51.9	0.422	0.34	1.224	764699.9	59081.4	Si

Verifica di stabilità per pressoflessione SLD §C.4.2.4.1.3.3.1 NTC18

X	Comb.	Sfruttamento	Classe	NEd	MxEq,Ed	MyEq,Ed	Area	Wx	Wy	χ,min	λ adim. x/m	λ adim. y/n	N,crit x/m	N,crit y/n	Verifica
0	SLD 8	0.06	1	-2068.6	-1273	0	32.19	227.8	51.9	0.422	0.34	1.224	764699.9	59081.4	Si

Verifica di stabilità a taglio anima Y §4.2.4.1.2.4 [4.2.27] NTC18

η	hw	tw	hw/tw max	Verifica
1.2	17.2	0.9	55.46	Si

Verifica di stabilità a taglio anima Y SLD §4.2.4.1.2.4 [4.2.27] NTC18

η	hw	tw	hw/tw max	Verifica
1.2	17.2	0.9	55.46	Si

Verifiche a deformabilità

Mensola X: No; Mensola Y: No.

Frecce lungo X

Ascissa freccia	Combinazione	Freccia	Luce	L/f	L/f,min	Tipo	Verifica
212.4	SLE RA 1	0	227.6	10000	250	Totale	Si
220	SLE RA 31	0	227.6	10000	250	Totale	Si
220	SLE RA 30	0	227.6	10000	250	Totale	Si
220	SLE RA 29	0	227.6	10000	250	Totale	Si
220	SLE RA 28	0	227.6	10000	250	Totale	Si
204.8	SLE RA 2	0	227.6	10000	350	Variabile	Si

Ascissa freccia	Combinazione	Freccia	Luce	L/f	L/f,min	Tipo	Verifica
220	SLE RA 31	0	227.6	10000	350	Variabile	Si
220	SLE RA 30	0	227.6	10000	350	Variabile	Si
220	SLE RA 29	0	227.6	10000	350	Variabile	Si
220	SLE RA 28	0	227.6	10000	350	Variabile	Si

Frecce lungo Y

Ascissa freccia	Combinazione	Freccia	Luce	L/f	L/f,min	Tipo	Verifica
113.8	SLE RA 1	-0.002	227.6	10000	250	Totale	Si
113.8	SLE RA 31	-0.012	227.6	10000	250	Totale	Si
113.8	SLE RA 30	-0.012	227.6	10000	250	Totale	Si
113.8	SLE RA 29	-0.01	227.6	10000	250	Totale	Si
113.8	SLE RA 28	-0.01	227.6	10000	250	Totale	Si
204.8	SLE RA 2	0	227.6	10000	350	Variabile	Si
113.8	SLE RA 31	-0.01	227.6	10000	350	Variabile	Si
113.8	SLE RA 30	-0.01	227.6	10000	350	Variabile	Si
113.8	SLE RA 29	-0.008	227.6	10000	350	Variabile	Si
113.8	SLE RA 28	-0.008	227.6	10000	350	Variabile	Si

Superelemento in acciaio composto dall'asta 250

Caratteristiche del materiale

Acciaio: S275, fyk = 2750

Caratteristiche geometriche

Lunghezza: 227.6
Nodo iniziale: 5 Nodo finale: 36
Cerniera iniziale: Svincolo: M2, M3 Cerniera finale: Svincolo: M2, M3
Sovraresistenza: 0% Sisma Z: No

Caratteristiche della sezione

Sezione	Rotazione	Area	Jx	Jy	ix	iy	Wx	Wy	Wplx	Wply
UPN200	180	32.19	1911.41	147.68	7.71	2.14	191.14	26.92	227.82	51.87

Verifiche di resistenza

Verifiche a forza assiale §4.2.4.1.2.1 - §4.2.4.1.2.2 NTC18

X	Comb.	Sfruttamento	Classe	NEd	Nc,Rd	Nt,Rd	Riduzione da taglio	ρx	ρy	Verifica
0	SLU 97	0.059	1	-5014.6	84315.5		1	0	0	Si

Verifiche a forza assiale SLD §4.2.4.1.2.1 - §4.2.4.1.2.2 NTC18

X	Comb.	Sfruttamento	Classe	NEd	Nc,Rd	Nt,Rd	Riduzione da taglio	ρx	ρy	Verifica
0	SLD 5	0.032	1	-2661.4	84315.5		1	0	0	Si

Verifica a taglio Y §4.2.4.1.2.4 NTC18

X	Comb.	Sfruttamento	VEd	Vc,Rd	Av	Interazione taglio-torsione	Riduzione torsione	Verifica
0	SLU 96	0.009	-238.3	26073.6	17.24	Considerata	1	Si

Verifica a taglio Y SLD §4.2.4.1.2.4 NTC18

X	Comb.	Sfruttamento	VEd	Vc,Rd	Av	Interazione taglio-torsione	Riduzione torsione	Verifica
227.6	SLD 5	0.001	25.8	26039.5	17.24	Considerata	1	Si

Verifica a torsione §4.2.4.1.2.5 NTC18

X	Comb.	Sfruttamento torsione	TEd	TRd	Riduzione taglio resistente	Sfruttamento taglio-torsione	τEd,totale	τRd	Verifica
121.4	SLV 5	0.008	110.8	14125.9	Considerata				Si

Verifica a torsione SLD §4.2.4.1.2.5 NTC18

X	Comb.	Sfruttamento torsione	TEd	TRd	Riduzione taglio resistente	Sfruttamento taglio-torsione	τEd,totale	τRd	Verifica
227.6	SLD 6	0.003	46	14125.9	Considerata				Si

Verifica a presso/tenso flessione retta X §§ 4.2.4.1.2.3 - 4.2.4.1.2.6 - 4.2.4.1.2.7 - 4.2.4.1.2.8 NTC18

Verifiche eseguite utilizzando la formula conservativa (6.2) §6.2.1 EN 1993-1-1:2005.

X	Comb.	Sfruttamento	Classe	NEd	NRd	Rid. NRd da VEd	Mx,Ed	Mx,Rd	Rid. Mx,Rd da VEd	Rid. Mx,Rd da NEd	ρx	ρy	Verifica
98.6	SLU 97	0.079	1	-4904.4	84315.5	1	12395	596667	1		0	0	Si

Verifica a presso/tenso flessione retta X SLD §§ 4.2.4.1.2.3 - 4.2.4.1.2.6 - 4.2.4.1.2.7 - 4.2.4.1.2.8 NTC18

Verifiche eseguite utilizzando la formula conservativa (6.2) §6.2.1 EN 1993-1-1:2005.

X	Comb.	Sfruttamento	Classe	NEd	NRd	Rid. NRd da VEd	Mx,Ed	Mx,Rd	Rid. Mx,Rd da VEd	Rid. Mx,Rd da NEd	ρx	ρy	Verifica
113.8	SLD 5	0.034	1	-2648.7	84315.5	1	1470	596667	1		0	0	Si

Verifiche ad instabilità

Caratteristiche iniziali

Membratura principale per controllo snellezza; Calcolo di snellezze ed N critici condotti secondo gli assi principali;
Curva X: c; Curva Y: c;
Svergolamento: Nessuno; la verifica a instabilità flesso-torsionale (svergolamento) non verrà eseguita.

Dati per instabilità attorno a x

Numero rit.	Presente	Ascissa	Campata	βx/m	Vincolo a entrambi estremi	λx/m	λVer
1	Si	0					
			1-2	1	Si	29.5	Si, (<200)
2	Si	227.6					

Dati per instabilità attorno a y

Numero rit.	Presente	Ascissa	Campata	βy/n	k,LT	kw,LT	Vincolo a entrambi estremi
1	Si	0					
			1-2	1	Si	106.3	Si, (<200)
2	Si	227.6					

Verifica di stabilità per pressoflessione §C.4.2.4.1.3.3.1 NTC18

X	Comb.	Sfruttamento	Classe	NEd	MxEq,Ed	MyEq,Ed	Area	Wx	Wy	χ,min	λ adim. x/m	λ adim. y/n	N,crit x/m	N,crit y/n	Verifica
0	SLU 130	0.159	1	-5014.6	10831	0	32.19	227.8	51.9	0.422	0.34	1.224	764699.9	59081.4	Si

Verifica di stabilità per pressoflessione SLD §C.4.2.4.1.3.3.1 NTC18

X	Comb.	Sfruttamento	Classe	NEd	MxEq,Ed	MyEq,Ed	Area	Wx	Wy	χ,min	λ adim. x/m	λ adim. y/n	N,crit x/m	N,crit y/n	Verifica
0	SLD 5	0.077	1	-2661.4	1273	0	32.19	227.8	51.9	0.422	0.34	1.224	764699.9	59081.4	Si

Verifica di stabilità a taglio anima Y §4.2.4.1.2.4 [4.2.27] NTC18

η	hw	tw	hw/tw max	Verifica
1.2	17.2	0.9	55.46	Si

Verifica di stabilità a taglio anima Y SLD §4.2.4.1.2.4 [4.2.27] NTC18

η	hw	tw	hw/tw max	Verifica
1.2	17.2	0.9	55.46	Si

Verifiche a deformabilità

Mensola X: No; Mensola Y: No.

Frecce lungo X

Ascissa freccia	Combinazione	Freccia	Luce	L/f	L/f,min	Tipo	Verifica
220	SLE RA 1	0	227.6	10000	250	Totale	Si
220	SLE RA 31	0	227.6	10000	250	Totale	Si
220	SLE RA 30	0	227.6	10000	250	Totale	Si
220	SLE RA 29	0	227.6	10000	250	Totale	Si
220	SLE RA 28	0	227.6	10000	250	Totale	Si
197.3	SLE RA 2	0	227.6	10000	350	Variabile	Si
182.1	SLE RA 31	0	227.6	10000	350	Variabile	Si
182.1	SLE RA 30	0	227.6	10000	350	Variabile	Si
182.1	SLE RA 29	0	227.6	10000	350	Variabile	Si
182.1	SLE RA 28	0	227.6	10000	350	Variabile	Si

Frecce lungo Y

Ascissa freccia	Combinazione	Freccia	Luce	L/f	L/f,min	Tipo	Verifica
113.8	SLE RA 1	0.002	227.6	10000	250	Totale	Si
113.8	SLE RA 31	0.012	227.6	10000	250	Totale	Si
113.8	SLE RA 30	0.012	227.6	10000	250	Totale	Si
113.8	SLE RA 29	0.01	227.6	10000	250	Totale	Si
113.8	SLE RA 28	0.01	227.6	10000	250	Totale	Si
220	SLE RA 2	0	227.6	10000	350	Variabile	Si
113.8	SLE RA 31	0.01	227.6	10000	350	Variabile	Si
113.8	SLE RA 30	0.01	227.6	10000	350	Variabile	Si
113.8	SLE RA 29	0.008	227.6	10000	350	Variabile	Si
113.8	SLE RA 28	0.008	227.6	10000	350	Variabile	Si

Superelemento in acciaio composto dall'asta 251

Caratteristiche del materiale

Acciaio: S275, fyk = 2750

Caratteristiche geometriche

Lunghezza: 227.6
Nodo iniziale: 9 Nodo finale: 36
Cerniera iniziale: Svincolo: M2, M3 Cerniera finale: Svincolo: M2, M3
Sovraresistenza: 0% Sisma Z: No

Caratteristiche della sezione

Sezione	Rotazione	Area	Jx	Jy	ix	iy	Wx	Wy	Wplx	Wply
UPN200	0	32.19	1911.41	147.68	7.71	2.14	191.14	26.92	227.82	51.87

Verifiche di resistenza

Verifiche a forza assiale §4.2.4.1.2.1 - §4.2.4.1.2.2 NTC18

X	Comb.	Sfruttamento	Classe	NEd	Nc,Rd	Nt,Rd	Riduzione da taglio	ρx	ρy	Verifica
0	SLU 98	0.053	1	-4442.5	84315.5		1	0	0	Si

Verifiche a forza assiale SLD §4.2.4.1.2.1 - §4.2.4.1.2.2 NTC18

X	Comb.	Sfruttamento	Classe	NEd	Nc,Rd	Nt,Rd	Riduzione da taglio	ρx	ρy	Verifica
0	SLD 8	0.028	1	-2351.7	84315.5		1	0	0	Si

Verifica a taglio Y §4.2.4.1.2.4 NTC18

X	Comb.	Sfruttamento	VEd	Vc,Rd	Av	Interazione taglio-torsione	Riduzione torsione	Verifica
0	SLU 98	0.009	239.5	26059.3	17.24	Considerata	1	Si

Verifica a taglio Y SLD §4.2.4.1.2.4 NTC18

X	Comb.	Sfruttamento	VEd	Vc,Rd	Av	Interazione taglio-torsione	Riduzione torsione	Verifica
227.6	SLD 12	0.001	-25.8	26029.8	17.24	Considerata	1	Si

Verifica a torsione §4.2.4.1.2.5 NTC18

X	Comb.	Sfruttamento torsione	TEd	TRd	Riduzione taglio resistente	Sfruttamento taglio-torsione	τEd,totale	τRd	Verifica
220	SLV 12	0.01	-141.4	14125.9	Considerata				Si

Verifica a torsione SLD §4.2.4.1.2.5 NTC18

X	Comb.	Sfruttamento torsione	TEd	TRd	Riduzione taglio resistente	Sfruttamento taglio-torsione	τEd,totale	τRd	Verifica
0	SLD 11	0.004	-59.2	14125.9	Considerata				Si

Verifica a presso/tenso flessione retta X §§ 4.2.4.1.2.3 - 4.2.4.1.2.6 - 4.2.4.1.2.7 - 4.2.4.1.2.8 NTC18

Verifiche eseguite utilizzando la formula conservativa (6.2) §6.2.1 EN 1993-1-1:2005.

X	Comb.	Sfruttamento	Classe	NEd	NRd	Rid. NRd da VEd	Mx,Ed	Mx,Rd	Rid. Mx,Rd da VEd	Rid. Mx,Rd da NEd	ρx	ρy	Verifica
98.6	SLU 98	0.072	1	-4332.3	84315.5	1	-12516	596667	1		0	0	Si

Verifica a presso/tenso flessione retta X SLD §§ 4.2.4.1.2.3 - 4.2.4.1.2.6 - 4.2.4.1.2.7 - 4.2.4.1.2.8 NTC18

Verifiche eseguite utilizzando la formula conservativa (6.2) §6.2.1 EN 1993-1-1:2005.

X	Comb.	Sfruttamento	Classe	NEd	NRd	Rid. NRd da VEd	Mx,Ed	Mx,Rd	Rid. Mx,Rd da VEd	Rid. Mx,Rd da NEd	ρx	ρy	Verifica
113.8	SLD 8	0.03	1	-2339.1	84315.5	1	-1470	596667	1		0	0	Si

Verifiche ad instabilità

Caratteristiche iniziali

Membratura principale per controllo snellezza; Calcolo di snellezze ed N critici condotti secondo gli assi principali;
Curva X: c; Curva Y: c;
Svergolamento: Nessuno; la verifica a instabilità flesso-torsionale (svergolamento) non verrà eseguita.

Dati per instabilità attorno a x

Numero rit.	Presente	Ascissa	Campata	βx/m	Vincolo a entrambi estremi	λx/m	λVer
1	Si	0					
			1-2	1	Si	29.5	Si, (<200)
2	Si	227.6					

Dati per instabilità attorno a y

Numero rit.	Presente	Ascissa	Campata	βy/n	k,LT	kw,LT	Vincolo a entrambi estremi
1	Si	0					
			1-2	1	Si	106.3	Si, (<200)
2	Si	227.6					

Verifica di stabilità per pressoflessione §C.4.2.4.1.3.3.1 NTC18

X	Comb.	Sfruttamento	Classe	NEd	MxEq,Ed	MyEq,Ed	Area	Wx	Wy	χ,min	λ adim. x/m	λ adim. y/n	N,crit x/m	N,crit y/n	Verifica
0	SLU 131	0.143	1	-4442.5	-11000	0	32.19	227.8	51.9	0.422	0.34	1.224	764699.9	59081.4	Si

Verifica di stabilità per pressoflessione SLD §C.4.2.4.1.3.3.1 NTC18

X	Comb.	Sfruttamento	Classe	NEd	MxEq,Ed	MyEq,Ed	Area	Wx	Wy	χ,min	λ adim. x/m	λ adim. y/n	N,crit x/m	N,crit y/n	Verifica
0	SLD 8	0.068	1	-2351.7	-1273	0	32.19	227.8	51.9	0.422	0.34	1.224	764699.9	59081.4	Si

Verifica di stabilità a taglio anima Y §4.2.4.1.2.4 [4.2.27] NTC18

η	hw	tw	hw/tw max	Verifica
1.2	17.2	0.9	55.46	Si

Verifica di stabilità a taglio anima Y SLD §4.2.4.1.2.4 [4.2.27] NTC18

η	hw	tw	hw/tw max	Verifica
1.2	17.2	0.9	55.46	Si

Verifiche a deformabilità

Mensola X: No; Mensola Y: No.

Frecce lungo X

Ascissa freccia	Combinazione	Freccia	Luce	L/f	L/f,min	Tipo	Verifica
166.9	SLE RA 1	0	227.6	10000	250	Totale	Si
174.5	SLE RA 31	0	227.6	10000	250	Totale	Si
174.5	SLE RA 30	0	227.6	10000	250	Totale	Si
174.5	SLE RA 29	0	227.6	10000	250	Totale	Si
174.5	SLE RA 28	0	227.6	10000	250	Totale	Si
212.4	SLE RA 2	0	227.6	10000	350	Variabile	Si
174.5	SLE RA 31	0	227.6	10000	350	Variabile	Si
174.5	SLE RA 30	0	227.6	10000	350	Variabile	Si
174.5	SLE RA 29	0	227.6	10000	350	Variabile	Si
174.5	SLE RA 28	0	227.6	10000	350	Variabile	Si

Frecce lungo Y

Ascissa freccia	Combinazione	Freccia	Luce	L/f	L/f,min	Tipo	Verifica
113.8	SLE RA 1	-0.002	227.6	10000	250	Totale	Si
113.8	SLE RA 31	-0.012	227.6	10000	250	Totale	Si
113.8	SLE RA 30	-0.012	227.6	10000	250	Totale	Si
113.8	SLE RA 29	-0.01	227.6	10000	250	Totale	Si

Ascissa freccia	Combinazione	Freccia	Luce	L/f	L/f,min	Tipo	Verifica
113.8	SLE RA 28	-0.01	227.6	10000	250	Totale	Si
121.4	SLE RA 2	0	227.6	10000	350	Variabile	Si
113.8	SLE RA 31	-0.01	227.6	10000	350	Variabile	Si
113.8	SLE RA 30	-0.01	227.6	10000	350	Variabile	Si
113.8	SLE RA 29	-0.008	227.6	10000	350	Variabile	Si
113.8	SLE RA 28	-0.008	227.6	10000	350	Variabile	Si

Superelemento in acciaio composto dall'asta 252

Caratteristiche del materiale

Acciaio: S275, fyk = 2750

Caratteristiche geometriche

Lunghezza: 227.6
Nodo iniziale: 7 Nodo finale: 40
Cerniera iniziale: Svincolo: M2, M3 Cerniera finale: Svincolo: M2, M3
Sovraresistenza: 0% Sisma Z: No

Caratteristiche della sezione

Sezione	Rotazione	Area	Jx	Jy	ix	iy	Wx	Wy	Wplx	Wply
UPN200	180	32.19	1911.41	147.68	7.71	2.14	191.14	26.92	227.82	51.87

Verifiche di resistenza

Verifiche a forza assiale §4.2.4.1.2.1 - §4.2.4.1.2.2 NTC18

X	Comb.	Sfruttamento	Classe	NEd	Nc,Rd	Nt,Rd	Riduzione da taglio	ρx	ρy	Verifica
0	SLU 117	0.037	1	-3134.1	84315.5		1	0	0	Si

Verifiche a forza assiale SLD §4.2.4.1.2.1 - §4.2.4.1.2.2 NTC18

X	Comb.	Sfruttamento	Classe	NEd	Nc,Rd	Nt,Rd	Riduzione da taglio	ρx	ρy	Verifica
0	SLD 5	0.017	1	-1462	84315.5		1	0	0	Si

Verifica a taglio Y §4.2.4.1.2.4 NTC18

X	Comb.	Sfruttamento	VEd	Vc,Rd	Av	Interazione taglio-torsione	Riduzione torsione	Verifica
0	SLU 132	0.009	-239.4	26060.3	17.24	Considerata	1	Si

Verifica a taglio Y SLD §4.2.4.1.2.4 NTC18

X	Comb.	Sfruttamento	VEd	Vc,Rd	Av	Interazione taglio-torsione	Riduzione torsione	Verifica
227.6	SLD 12	0.001	25.8	26037.7	17.24	Considerata	1	Si

Verifica a torsione §4.2.4.1.2.5 NTC18

X	Comb.	Sfruttamento torsione	TEd	TRd	Riduzione taglio resistente	Sfruttamento taglio-torsione	τEd,totale	τRd	Verifica
227.6	SLV 12	0.009	-121.1	14125.9	Considerata				Si

Verifica a torsione SLD §4.2.4.1.2.5 NTC18

X	Comb.	Sfruttamento torsione	TEd	TRd	Riduzione taglio resistente	Sfruttamento taglio-torsione	τEd,totale	τRd	Verifica
113.8	SLD 11	0.003	-48.5	14125.9	Considerata				Si

Verifica a presso/tenso flessione retta X §§ 4.2.4.1.2.3 - 4.2.4.1.2.6 - 4.2.4.1.2.7 - 4.2.4.1.2.8 NTC18

Verifiche eseguite utilizzando la formula conservativa (6.2) §6.2.1 EN 1993-1-1:2005.

X	Comb.	Sfruttamento	Classe	NEd	NRd	Rid. NRd da VEd	Mx,Ed	Mx,Rd	Rid. Mx,Rd da VEd	Rid. Mx,Rd da NEd	ρx	ρy	Verifica
98.6	SLU 130	0.055	1	-2872.1	84315.5	1	12508	596667	1		0	0	Si

Verifica a presso/tenso flessione retta X SLD §§ 4.2.4.1.2.3 - 4.2.4.1.2.6 - 4.2.4.1.2.7 - 4.2.4.1.2.8 NTC18

Verifiche eseguite utilizzando la formula conservativa (6.2) §6.2.1 EN 1993-1-1:2005.

X	Comb.	Sfruttamento	Classe	NEd	NRd	Rid. NRd da VEd	Mx,Ed	Mx,Rd	Rid. Mx,Rd da VEd	Rid. Mx,Rd da NEd	ρx	ρy	Verifica
113.8	SLD 5	0.02	1	-1449.3	84315.5	1	1470	596667	1		0	0	Si

Verifiche ad instabilità

Caratteristiche iniziali

Membratura principale per controllo snellezza; Calcolo di snellezze ed N critici condotti secondo gli assi principali;
Curva X: c; Curva Y: c;
Svergolamento: Nessuno; la verifica a instabilità flesso-torsionale (svergolamento) non verrà eseguita.

Dati per instabilità attorno a x

Numero rit.	Presente	Ascissa	Campata	βx/m	Vincolo a entrambi estremi	λx/m	λVer
1	Si	0					
			1-2	1	Si	29.5	Si, (<200)
2	Si	227.6					

Dati per instabilità attorno a y

Numero rit.	Presente	Ascissa	Campata	βy/n	k,LT	kw,LT	Vincolo a entrambi estremi
1	Si	0					
			1-2	1	Si	106.3	Si, (<200)

Numero rit.	Presente	Ascissa	Campata	βy/n	k,LT	kw,LT	Vincolo a entrambi estremi
2	Si	227.6					

Verifica di stabilità per pressoflessione §C.4.2.4.1.3.3.1 NTC18

X	Comb.	Sfruttamento	Classe	NEd	MxEq,Ed	MyEq,Ed	Area	Wx	Wy	χ,min	λ adim. x/m	λ adim. y/n	N,crit x/m	N,crit y/n	Verifica
0	SLU 97	0.102	1	-2982.4	10989	0	32.19	227.8	51.9	0.422	0.34	1.224	764699.9	59081.4	Si

Verifica di stabilità per pressoflessione SLD §C.4.2.4.1.3.3.1 NTC18

X	Comb.	Sfruttamento	Classe	NEd	MxEq,Ed	MyEq,Ed	Area	Wx	Wy	χ,min	λ adim. x/m	λ adim. y/n	N,crit x/m	N,crit y/n	Verifica
0	SLD 5	0.043	1	-1462	1273	0	32.19	227.8	51.9	0.422	0.34	1.224	764699.9	59081.4	Si

Verifica di stabilità a taglio anima Y §4.2.4.1.2.4 [4.2.27] NTC18

η	hw	tw	hw/tw max	Verifica
1.2	17.2	0.9	55.46	Si

Verifica di stabilità a taglio anima Y SLD §4.2.4.1.2.4 [4.2.27] NTC18

η	hw	tw	hw/tw max	Verifica
1.2	17.2	0.9	55.46	Si

Verifiche a deformabilità

Mensola X: No; Mensola Y: No.

Frecce lungo X

Ascissa freccia	Combinazione	Freccia	Luce	L/f	L/f,min	Tipo	Verifica
189.7	SLE RA 1	0	227.6	10000	250	Totale	Si
174.5	SLE RA 31	0	227.6	10000	250	Totale	Si
189.7	SLE RA 30	0	227.6	10000	250	Totale	Si
174.5	SLE RA 29	0	227.6	10000	250	Totale	Si
189.7	SLE RA 28	0	227.6	10000	250	Totale	Si
174.5	SLE RA 2	0	227.6	10000	350	Variabile	Si
166.9	SLE RA 31	0	227.6	10000	350	Variabile	Si
212.4	SLE RA 30	0	227.6	10000	350	Variabile	Si
166.9	SLE RA 29	0	227.6	10000	350	Variabile	Si
166.9	SLE RA 28	0	227.6	10000	350	Variabile	Si

Frecce lungo Y

Ascissa freccia	Combinazione	Freccia	Luce	L/f	L/f,min	Tipo	Verifica
113.8	SLE RA 1	0.002	227.6	10000	250	Totale	Si
113.8	SLE RA 31	0.012	227.6	10000	250	Totale	Si
113.8	SLE RA 30	0.012	227.6	10000	250	Totale	Si
113.8	SLE RA 29	0.01	227.6	10000	250	Totale	Si
113.8	SLE RA 28	0.01	227.6	10000	250	Totale	Si
174.5	SLE RA 2	0	227.6	10000	350	Variabile	Si
113.8	SLE RA 31	0.01	227.6	10000	350	Variabile	Si
113.8	SLE RA 30	0.01	227.6	10000	350	Variabile	Si
113.8	SLE RA 29	0.008	227.6	10000	350	Variabile	Si
113.8	SLE RA 28	0.008	227.6	10000	350	Variabile	Si

Superelemento in acciaio composto dall'asta 253

Caratteristiche del materiale

Acciaio: S275, fyk = 2750

Caratteristiche geometriche

Lunghezza: 227.6
Nodo iniziale: 11 Nodo finale: 40
Cerniera iniziale: Svincolo: M2, M3 Cerniera finale: Svincolo: M2, M3
Sovraresistenza: 0% Sisma Z: No

Caratteristiche della sezione

Sezione	Rotazione	Area	Jx	Jy	ix	iy	Wx	Wy	Wplx	Wply
UPN200	0	32.19	1911.41	147.68	7.71	2.14	191.14	26.92	227.82	51.87

Verifiche di resistenza

Verifiche a forza assiale §4.2.4.1.2.1 - §4.2.4.1.2.2 NTC18

X	Comb.	Sfruttamento	Classe	NEd	Nc,Rd	Nt,Rd	Riduzione da taglio	ρx	ρy	Verifica
0	SLU 85	0.035	1	-2982.3	84315.5		1	0	0	Si

Verifiche a forza assiale SLD §4.2.4.1.2.1 - §4.2.4.1.2.2 NTC18

X	Comb.	Sfruttamento	Classe	NEd	Nc,Rd	Nt,Rd	Riduzione da taglio	ρx	ρy	Verifica
0	SLD 8	0.016	1	-1364.3	84315.5		1	0	0	Si

Verifica a taglio Y §4.2.4.1.2.4 NTC18

X	Comb.	Sfruttamento	VEd	Vc,Rd	Av	Interazione taglio-torsione	Riduzione torsione	Verifica
0	SLU 97	0.009	239.3	26054.8	17.24	Considerata	1	Si

Verifica a taglio Y SLD §4.2.4.1.2.4 NTC18

X	Comb.	Sfruttamento	VEd	Vc,Rd	Av	Interazione taglio-torsione	Riduzione torsione	Verifica
227.6	SLD 10	0.001	-25.8	26039.2	17.24	Considerata	1	Si

Verifica a torsione §4.2.4.1.2.5 NTC18

X	Comb.	Sfruttamento torsione	TEd	TRd	Riduzione taglio resistente	Sfruttamento taglio-torsione	τEd,totale	τRd	Verifica
212.4	SLV 9	0.009	120.2	14125.9	Considerata				Si

Verifica a torsione SLD §4.2.4.1.2.5 NTC18

X	Comb.	Sfruttamento torsione	TEd	TRd	Riduzione taglio resistente	Sfruttamento taglio-torsione	τEd,totale	τRd	Verifica
227.6	SLD 10	0.003	46.5	14125.9	Considerata				Si

Verifica a presso/tenso flessione retta X §§ 4.2.4.1.2.3 - 4.2.4.1.2.6 - 4.2.4.1.2.7 - 4.2.4.1.2.8 NTC18

Verifiche eseguite utilizzando la formula conservativa (6.2) §6.2.1 EN 1993-1-1:2005.

X	Comb.	Sfruttamento	Classe	NEd	NRd	Rid. NRd da VEd	Mx,Ed	Mx,Rd	Rid. Mx,Rd da VEd	Rid. Mx,Rd da NEd	ρx	ρy	Verifica
98.6	SLU 99	0.053	1	-2688.8	84315.5	1	-12465	596667	1		0	0	Si

Verifica a presso/tenso flessione retta X SLD §§ 4.2.4.1.2.3 - 4.2.4.1.2.6 - 4.2.4.1.2.7 - 4.2.4.1.2.8 NTC18

Verifiche eseguite utilizzando la formula conservativa (6.2) §6.2.1 EN 1993-1-1:2005.

X	Comb.	Sfruttamento	Classe	NEd	NRd	Rid. NRd da VEd	Mx,Ed	Mx,Rd	Rid. Mx,Rd da VEd	Rid. Mx,Rd da NEd	ρx	ρy	Verifica
113.8	SLD 8	0.018	1	-1351.7	84315.5	1	-1470	596667	1		0	0	Si

Verifiche ad instabilità

Caratteristiche iniziali

Membratura principale per controllo snellezza; Calcolo di snellezze ed N critici condotti secondo gli assi principali;
Curva X: c; Curva Y: c;
Svergolamento: Nessuno; la verifica a instabilità flesso-torsionale (svergolamento) non verrà eseguita.

Dati per instabilità attorno a x

Numero rit.	Presente	Ascissa	Campata	βx/m	Vincolo a entrambi estremi	λx/m	λVer
1	Si	0					
			1-2	1	Si	29.5	Si, (<200)
2	Si	227.6					

Dati per instabilità attorno a y

Numero rit.	Presente	Ascissa	Campata	βy/n	k,LT	kw,LT	Vincolo a entrambi estremi
1	Si	0					
			1-2	1	Si	106.3	Si, (<200)
2	Si	227.6					

Verifica di stabilità per pressoflessione §C.4.2.4.1.3.3.1 NTC18

X	Comb.	Sfruttamento	Classe	NEd	MxEq,Ed	MyEq,Ed	Area	Wx	Wy	χ,min	λ adim. x/m	λ adim. y/n	N,crit x/m	N,crit y/n	Verifica
0	SLU 132	0.097	1	-2799.2	-10959	0	32.19	227.8	51.9	0.422	0.34	1.224	764699.9	59081.4	Si

Verifica di stabilità per pressoflessione SLD §C.4.2.4.1.3.3.1 NTC18

X	Comb.	Sfruttamento	Classe	NEd	MxEq,Ed	MyEq,Ed	Area	Wx	Wy	χ,min	λ adim. x/m	λ adim. y/n	N,crit x/m	N,crit y/n	Verifica
0	SLD 8	0.04	1	-1364.3	-1273	0	32.19	227.8	51.9	0.422	0.34	1.224	764699.9	59081.4	Si

Verifica di stabilità a taglio anima Y §4.2.4.1.2.4 [4.2.27] NTC18

η	hw	tw	hw/tw max	Verifica
1.2	17.2	0.9	55.46	Si

Verifica di stabilità a taglio anima Y SLD §4.2.4.1.2.4 [4.2.27] NTC18

η	hw	tw	hw/tw max	Verifica
1.2	17.2	0.9	55.46	Si

Verifiche a deformabilità

Mensola X: No; Mensola Y: No.

Frecce lungo X

Ascissa freccia	Combinazione	Freccia	Luce	L/f	L/f,min	Tipo	Verifica
212.4	SLE RA 1	0	227.6	10000	250	Totale	Si
129	SLE RA 31	0	227.6	10000	250	Totale	Si
212.4	SLE RA 30	0	227.6	10000	250	Totale	Si
129	SLE RA 29	0	227.6	10000	250	Totale	Si
212.4	SLE RA 28	0	227.6	10000	250	Totale	Si
166.9	SLE RA 2	0	227.6	10000	350	Variabile	Si
166.9	SLE RA 31	0	227.6	10000	350	Variabile	Si
182.1	SLE RA 30	0	227.6	10000	350	Variabile	Si
197.3	SLE RA 29	0	227.6	10000	350	Variabile	Si
220	SLE RA 28	0	227.6	10000	350	Variabile	Si

Frecce lungo Y

Ascissa freccia	Combinazione	Freccia	Luce	L/f	L/f,min	Tipo	Verifica
113.8	SLE RA 1	-0.002	227.6	10000	250	Totale	Si
113.8	SLE RA 31	-0.012	227.6	10000	250	Totale	Si
113.8	SLE RA 30	-0.012	227.6	10000	250	Totale	Si
113.8	SLE RA 29	-0.01	227.6	10000	250	Totale	Si
113.8	SLE RA 28	-0.01	227.6	10000	250	Totale	Si
189.7	SLE RA 2	0	227.6	10000	350	Variabile	Si
113.8	SLE RA 31	-0.01	227.6	10000	350	Variabile	Si
113.8	SLE RA 30	-0.01	227.6	10000	350	Variabile	Si
113.8	SLE RA 29	-0.008	227.6	10000	350	Variabile	Si
113.8	SLE RA 28	-0.008	227.6	10000	350	Variabile	Si

Superelemento in acciaio composto dall'asta 254

Caratteristiche del materiale

Acciaio: S275, fyk = 2750

Caratteristiche geometriche

Lunghezza: 227.6
Nodo iniziale: 9 Nodo finale: 44
Cerniera iniziale: Svincolo: M2, M3 Cerniera finale: Svincolo: M2, M3
Sovraresistenza: 0% Sisma Z: No

Caratteristiche della sezione

Sezione	Rotazione	Area	Jx	Jy	ix	iy	Wx	Wy	Wplx	Wply
UPN200	180	32.19	1911.41	147.68	7.71	2.14	191.14	26.92	227.82	51.87

Verifiche di resistenza

Verifiche a forza assiale §4.2.4.1.2.1 - §4.2.4.1.2.2 NTC18

X	Comb.	Sfruttamento	Classe	NEd	Nc,Rd	Nt,Rd	Riduzione da taglio	ρx	ρy	Verifica
0	SLU 117	0.052	1	-4382.9	84315.5		1	0	0	Si

Verifiche a forza assiale SLD §4.2.4.1.2.1 - §4.2.4.1.2.2 NTC18

X	Comb.	Sfruttamento	Classe	NEd	Nc,Rd	Nt,Rd	Riduzione da taglio	ρx	ρy	Verifica
0	SLD 5	0.017	1	-1447.1	84315.5		1	0	0	Si

Verifica a taglio Y §4.2.4.1.2.4 NTC18

X	Comb.	Sfruttamento	VEd	Vc,Rd	Av	Interazione taglio-torsione	Riduzione torsione	Verifica
0	SLU 132	0.009	-239.3	26060	17.24	Considerata	1	Si

Verifica a taglio Y SLD §4.2.4.1.2.4 NTC18

X	Comb.	Sfruttamento	VEd	Vc,Rd	Av	Interazione taglio-torsione	Riduzione torsione	Verifica
227.6	SLD 12	0.001	25.8	26039.4	17.24	Considerata	1	Si

Verifica a torsione §4.2.4.1.2.5 NTC18

X	Comb.	Sfruttamento torsione	TEd	TRd	Riduzione taglio resistente	Sfruttamento taglio-torsione	τEd,totale	τRd	Verifica
220	SLV 11	0.008	-119.9	14125.9	Considerata				Si

Verifica a torsione SLD §4.2.4.1.2.5 NTC18

X	Comb.	Sfruttamento torsione	TEd	TRd	Riduzione taglio resistente	Sfruttamento taglio-torsione	τEd,totale	τRd	Verifica
106.2	SLD 12	0.003	-46.3	14125.9	Considerata				Si

Verifica a presso/tenso flessione retta X §§ 4.2.4.1.2.3 - 4.2.4.1.2.6 - 4.2.4.1.2.7 - 4.2.4.1.2.8 NTC18

Verifiche eseguite utilizzando la formula conservativa (6.2) §6.2.1 EN 1993-1-1:2005.

X	Comb.	Sfruttamento	Classe	NEd	NRd	Rid. NRd da VEd	Mx,Ed	Mx,Rd	Rid. Mx,Rd da VEd	Rid. Mx,Rd da NEd	ρx	ρy	Verifica
98.6	SLU 97	0.066	1	-3785.6	84315.5	1	12465	596667	1		0	0	Si

Verifica a presso/tenso flessione retta X SLD §§ 4.2.4.1.2.3 - 4.2.4.1.2.6 - 4.2.4.1.2.7 - 4.2.4.1.2.8 NTC18

Verifiche eseguite utilizzando la formula conservativa (6.2) §6.2.1 EN 1993-1-1:2005.

X	Comb.	Sfruttamento	Classe	NEd	NRd	Rid. NRd da VEd	Mx,Ed	Mx,Rd	Rid. Mx,Rd da VEd	Rid. Mx,Rd da NEd	ρx	ρy	Verifica
113.8	SLD 5	0.019	1	-1434.5	84315.5	1	1470	596667	1		0	0	Si

Verifiche ad instabilità

Caratteristiche iniziali

Membratura principale per controllo snellezza; Calcolo di snellezze ed N critici condotti secondo gli assi principali;
Curva X: c; Curva Y: c;
Svergolamento: Nessuno; la verifica a instabilità flesso-torsionale (svergolamento) non verrà eseguita.

Dati per instabilità attorno a x

Numero rit.	Presente	Ascissa	Campata	βx/m	Vincolo a entrambi estremi	λx/m	λVer
1	Si	0					
			1-2	1	Si	29.5	Si, (<200)
2	Si	227.6					

Dati per instabilità attorno a y

Numero rit.	Presente	Ascissa	Campata	βy/n	k,LT	kw,LT	Vincolo a entrambi estremi
1	Si	0					
			1-2	1	Si	106.3	Si, (<200)
2	Si	227.6					

Verifica di stabilità per pressoflessione §C.4.2.4.1.3.3.1 NTC18

X	Comb.	Sfruttamento	Classe	NEd	MxEq,Ed	MyEq,Ed	Area	Wx	Wy	χ,min	λ adim. x/m	λ adim. y/n	N,crit x/m	N,crit y/n	Verifica
0	SLU 117	0.134	1	-4382.9	6457	0	32.19	227.8	51.9	0.422	0.34	1.224	764699.9	59081.4	Si

Verifica di stabilità per pressoflessione SLD §C.4.2.4.1.3.3.1 NTC18

X	Comb.	Sfruttamento	Classe	NEd	MxEq,Ed	MyEq,Ed	Area	Wx	Wy	χ,min	λ adim. x/m	λ adim. y/n	N,crit x/m	N,crit y/n	Verifica
0	SLD 5	0.043	1	-1447.1	1273	0	32.19	227.8	51.9	0.422	0.34	1.224	764699.9	59081.4	Si

Verifica di stabilità a taglio anima Y §4.2.4.1.2.4 [4.2.27] NTC18

η	hw	tw	hw/tw max	Verifica
1.2	17.2	0.9	55.46	Si

Verifica di stabilità a taglio anima Y SLD §4.2.4.1.2.4 [4.2.27] NTC18

η	hw	tw	hw/tw max	Verifica
1.2	17.2	0.9	55.46	Si

Verifiche a deformabilità

Mensola X: No; Mensola Y: No.

Frecce lungo X

Ascissa freccia	Combinazione	Freccia	Luce	L/f	L/f,min	Tipo	Verifica
220	SLE RA 1	0	227.6	10000	250	Totale	Si
174.5	SLE RA 31	0	227.6	10000	250	Totale	Si
220	SLE RA 30	0	227.6	10000	250	Totale	Si
174.5	SLE RA 29	0	227.6	10000	250	Totale	Si
220	SLE RA 28	0	227.6	10000	250	Totale	Si
212.4	SLE RA 2	0	227.6	10000	350	Variabile	Si
174.5	SLE RA 31	0	227.6	10000	350	Variabile	Si
182.1	SLE RA 30	0	227.6	10000	350	Variabile	Si
212.4	SLE RA 29	0	227.6	10000	350	Variabile	Si
182.1	SLE RA 28	0	227.6	10000	350	Variabile	Si

Frecce lungo Y

Ascissa freccia	Combinazione	Freccia	Luce	L/f	L/f,min	Tipo	Verifica
113.8	SLE RA 1	0.002	227.6	10000	250	Totale	Si
113.8	SLE RA 31	0.012	227.6	10000	250	Totale	Si
113.8	SLE RA 30	0.012	227.6	10000	250	Totale	Si
113.8	SLE RA 29	0.01	227.6	10000	250	Totale	Si
113.8	SLE RA 28	0.01	227.6	10000	250	Totale	Si
212.4	SLE RA 2	0	227.6	10000	350	Variabile	Si
113.8	SLE RA 31	0.01	227.6	10000	350	Variabile	Si
113.8	SLE RA 30	0.01	227.6	10000	350	Variabile	Si
113.8	SLE RA 29	0.008	227.6	10000	350	Variabile	Si
113.8	SLE RA 28	0.008	227.6	10000	350	Variabile	Si

Superelemento in acciaio composto dall'asta 255

Caratteristiche del materiale

Acciaio: S275, fyk = 2750

Caratteristiche geometriche

Lunghezza: 227.6
Nodo iniziale: 13 Nodo finale: 44
Cerniera iniziale: Svincolo: M2, M3 Cerniera finale: Svincolo: M2, M3
Sovraresistenza: 0% Sisma Z: No

Caratteristiche della sezione

Sezione	Rotazione	Area	Jx	Jy	ix	iy	Wx	Wy	Wplx	Wply
UPN200	0	32.19	1911.41	147.68	7.71	2.14	191.14	26.92	227.82	51.87

Verifiche di resistenza

Verifiche a forza assiale §4.2.4.1.2.1 - §4.2.4.1.2.2 NTC18

X	Comb.	Sfruttamento	Classe	NEd	Nc,Rd	Nt,Rd	Riduzione da taglio	ρx	ρy	Verifica
0	SLU 85	0.051	1	-4324.7	84315.5		1	0	0	Si

Verifiche a forza assiale SLD §4.2.4.1.2.1 - §4.2.4.1.2.2 NTC18

X	Comb.	Sfruttamento	Classe	NEd	Nc,Rd	Nt,Rd	Riduzione da taglio	ρx	ρy	Verifica
0	SLD 8	0.017	1	-1410.7	84315.5		1	0	0	Si

Verifica a taglio Y §4.2.4.1.2.4 NTC18

X	Comb.	Sfruttamento	VEd	Vc,Rd	Av	Interazione taglio-torsione	Riduzione torsione	Verifica
0	SLU 97	0.009	239.3	26047.9	17.24	Considerata	1	Si

Verifica a taglio Y SLD §4.2.4.1.2.4 NTC18

X	Comb.	Sfruttamento	VEd	Vc,Rd	Av	Interazione taglio-torsione	Riduzione torsione	Verifica
227.6	SLD 10	0.001	-25.8	26039.2	17.24	Considerata	1	Si

Verifica a torsione §4.2.4.1.2.5 NTC18

X	Comb.	Sfruttamento torsione	TEd	TRd	Riduzione taglio resistente	Sfruttamento taglio-torsione	τEd,totale	τRd	Verifica
151.7	SLV 9	0.009	120.1	14125.9	Considerata				Si

Verifica a torsione SLD §4.2.4.1.2.5 NTC18

X	Comb.	Sfruttamento torsione	TEd	TRd	Riduzione taglio resistente	Sfruttamento taglio-torsione	τEd,totale	τRd	Verifica
227.6	SLD 10	0.003	46.6	14125.9	Considerata				Si

Verifica a presso/tenso flessione retta X §§ 4.2.4.1.2.3 - 4.2.4.1.2.6 - 4.2.4.1.2.7 - 4.2.4.1.2.8 NTC18

Verifiche eseguite utilizzando la formula conservativa (6.2) §6.2.1 EN 1993-1-1:2005.

X	Comb.	Sfruttamento	Classe	NEd	NRd	Rid. NRd da VEd	Mx,Ed	Mx,Rd	Rid. Mx,Rd da VEd	Rid. Mx,Rd da NEd	ρx	ρy	Verifica
98.6	SLU 99	0.065	1	-3713.6	84315.5	1	-12465	596667	1		0	0	Si

Verifica a presso/tenso flessione retta X SLD §§ 4.2.4.1.2.3 - 4.2.4.1.2.6 - 4.2.4.1.2.7 - 4.2.4.1.2.8 NTC18

Verifiche eseguite utilizzando la formula conservativa (6.2) §6.2.1 EN 1993-1-1:2005.

X	Comb.	Sfruttamento	Classe	NEd	NRd	Rid. NRd da VEd	Mx,Ed	Mx,Rd	Rid. Mx,Rd da VEd	Rid. Mx,Rd da NEd	ρx	ρy	Verifica
113.8	SLD 8	0.019	1	-1398.1	84315.5	1	-1470	596667	1		0	0	Si

Verifiche ad instabilità

Caratteristiche iniziali

Membratura principale per controllo snellezza; Calcolo di snellezze ed N critici condotti secondo gli assi principali;
Curva X: c; Curva Y: c;
Svergolamento: Nessuno; la verifica a instabilità flesso-torsionale (svergolamento) non verrà eseguita.

Dati per instabilità attorno a x

Numero rit.	Presente	Ascissa	Campata	βx/m	Vincolo a entrambi estremi	λx/m	λVer
1	Si	0					
			1-2	1	Si	29.5	Si, (<200)
2	Si	227.6					

Dati per instabilità attorno a y

Numero rit.	Presente	Ascissa	Campata	βy/n	k,LT	kw,LT	Vincolo a entrambi estremi
1	Si	0					
			1-2	1	Si	106.3	Si, (<200)
2	Si	227.6					

Verifica di stabilità per pressoflessione §C.4.2.4.1.3.3.1 NTC18

X	Comb.	Sfruttamento	Classe	NEd	MxEq,Ed	MyEq,Ed	Area	Wx	Wy	χ,min	λ adim. x/m	λ adim. y/n	N,crit x/m	N,crit y/n	Verifica
0	SLU 85	0.132	1	-4324.7	-6457	0	32.19	227.8	51.9	0.422	0.34	1.224	764699.9	59081.4	Si

Verifica di stabilità per pressoflessione SLD §C.4.2.4.1.3.3.1 NTC18

X	Comb.	Sfruttamento	Classe	NEd	MxEq,Ed	MyEq,Ed	Area	Wx	Wy	χ,min	λ adim. x/m	λ adim. y/n	N,crit x/m	N,crit y/n	Verifica
0	SLD 8	0.042	1	-1410.7	-1273	0	32.19	227.8	51.9	0.422	0.34	1.224	764699.9	59081.4	Si

Verifica di stabilità a taglio anima Y §4.2.4.1.2.4 [4.2.27] NTC18

η	hw	tw	hw/tw max	Verifica
1.2	17.2	0.9	55.46	Si

Verifica di stabilità a taglio anima Y SLD §4.2.4.1.2.4 [4.2.27] NTC18

η	hw	tw	hw/tw max	Verifica
1.2	17.2	0.9	55.46	Si

Verifiche a deformabilità

Mensola X: No; Mensola Y: No.

Frecce lungo X

Ascissa freccia	Combinazione	Freccia	Luce	L/f	L/f,min	Tipo	Verifica
136.6	SLE RA 1	0	227.6	10000	250	Totale	Si
189.7	SLE RA 31	0	227.6	10000	250	Totale	Si
212.4	SLE RA 30	0	227.6	10000	250	Totale	Si
189.7	SLE RA 29	0	227.6	10000	250	Totale	Si
136.6	SLE RA 28	0	227.6	10000	250	Totale	Si
189.7	SLE RA 2	0	227.6	10000	350	Variabile	Si
189.7	SLE RA 31	0	227.6	10000	350	Variabile	Si
197.3	SLE RA 30	0	227.6	10000	350	Variabile	Si
189.7	SLE RA 29	0	227.6	10000	350	Variabile	Si
182.1	SLE RA 28	0	227.6	10000	350	Variabile	Si

Frecce lungo Y

Ascissa freccia	Combinazione	Freccia	Luce	L/f	L/f,min	Tipo	Verifica
113.8	SLE RA 1	-0.002	227.6	10000	250	Totale	Si
113.8	SLE RA 31	-0.012	227.6	10000	250	Totale	Si
113.8	SLE RA 30	-0.012	227.6	10000	250	Totale	Si
113.8	SLE RA 29	-0.01	227.6	10000	250	Totale	Si
113.8	SLE RA 28	-0.01	227.6	10000	250	Totale	Si
220	SLE RA 2	0	227.6	10000	350	Variabile	Si
113.8	SLE RA 31	-0.01	227.6	10000	350	Variabile	Si
113.8	SLE RA 30	-0.01	227.6	10000	350	Variabile	Si
113.8	SLE RA 29	-0.008	227.6	10000	350	Variabile	Si
113.8	SLE RA 28	-0.008	227.6	10000	350	Variabile	Si

Superelemento in acciaio composto dall'asta 256

Caratteristiche del materiale

Acciaio: S275, fyk = 2750

Caratteristiche geometriche

Lunghezza: 227.6

Nodo iniziale: 11 Nodo finale: 48
Cerniera iniziale: Svincolo: M2, M3 Cerniera finale: Svincolo: M2, M3
Sovraresistenza: 0% Sisma Z: No

Caratteristiche della sezione

Sezione	Rotazione	Area	Jx	Jy	ix	iy	Wx	Wy	Wplx	Wply
UPN200	180	32.19	1911.41	147.68	7.71	2.14	191.14	26.92	227.82	51.87

Verifiche di resistenza

Verifiche a forza assiale §4.2.4.1.2.1 - §4.2.4.1.2.2 NTC18

X	Comb.	Sfruttamento	Classe	NEd	Nc,Rd	Nt,Rd	Riduzione da taglio	ρx	ρy	Verifica
0	SLU 117	0.064	1	-5363.6	84315.5		1	0	0	Si

Verifiche a forza assiale SLD §4.2.4.1.2.1 - §4.2.4.1.2.2 NTC18

X	Comb.	Sfruttamento	Classe	NEd	Nc,Rd	Nt,Rd	Riduzione da taglio	ρx	ρy	Verifica
0	SLD 5	0.017	1	-1431.6	84315.5		1	0	0	Si

Verifica a taglio Y §4.2.4.1.2.4 NTC18

X	Comb.	Sfruttamento	VEd	Vc,Rd	Av	Interazione taglio-torsione	Riduzione torsione	Verifica
0	SLU 132	0.009	-239.3	26050.7	17.24	Considerata	1	Si

Verifica a taglio Y SLD §4.2.4.1.2.4 NTC18

X	Comb.	Sfruttamento	VEd	Vc,Rd	Av	Interazione taglio-torsione	Riduzione torsione	Verifica
227.6	SLD 12	0.001	25.8	26039.2	17.24	Considerata	1	Si

Verifica a torsione §4.2.4.1.2.5 NTC18

X	Comb.	Sfruttamento torsione	TEd	TRd	Riduzione taglio resistente	Sfruttamento taglio-torsione	τEd,totale	τRd	Verifica
113.8	SLV 12	0.009	-120.1	14125.9	Considerata				Si

Verifica a torsione SLD §4.2.4.1.2.5 NTC18

X	Comb.	Sfruttamento torsione	TEd	TRd	Riduzione taglio resistente	Sfruttamento taglio-torsione	τEd,totale	τRd	Verifica
106.2	SLD 12	0.003	-46.6	14125.9	Considerata				Si

Verifica a presso/tenso flessione retta X §§ 4.2.4.1.2.3 - 4.2.4.1.2.6 - 4.2.4.1.2.7 - 4.2.4.1.2.8 NTC18

Verifiche eseguite utilizzando la formula conservativa (6.2) §6.2.1 EN 1993-1-1:2005.

X	Comb.	Sfruttamento	Classe	NEd	NRd	Rid. NRd da VEd	Mx,Ed	Mx,Rd	Rid. Mx,Rd da VEd	Rid. Mx,Rd da NEd	ρx	ρy	Verifica
98.6	SLU 84	0.075	1	-5299.8	84315.5	1	7342	596667	1		0	0	Si

Verifica a presso/tenso flessione retta X SLD §§ 4.2.4.1.2.3 - 4.2.4.1.2.6 - 4.2.4.1.2.7 - 4.2.4.1.2.8 NTC18

Verifiche eseguite utilizzando la formula conservativa (6.2) §6.2.1 EN 1993-1-1:2005.

X	Comb.	Sfruttamento	Classe	NEd	NRd	Rid. NRd da VEd	Mx,Ed	Mx,Rd	Rid. Mx,Rd da VEd	Rid. Mx,Rd da NEd	ρx	ρy	Verifica
113.8	SLD 5	0.019	1	-1419	84315.5	1	1470	596667	1		0	0	Si

Verifiche ad instabilità

Caratteristiche iniziali

Membratura principale per controllo snellezza; Calcolo di snellezze ed N critici condotti secondo gli assi principali;
Curva X: c; Curva Y: c;
Svergolamento: Nessuno; la verifica a instabilità flesso-torsionale (svergolamento) non verrà eseguita.

Dati per instabilità attorno a x

Numero rit.	Presente	Ascissa	Campata	βx/m	Vincolo a entrambi estremi	λx/m	λVer
1	Si	0					
			1-2	1	Si	29.5	Si, (<200)
2	Si	227.6					

Dati per instabilità attorno a y

Numero rit.	Presente	Ascissa	Campata	βy/n	k,LT	kw,LT	Vincolo a entrambi estremi
1	Si	0					
			1-2	1	Si	106.3	Si, (<200)
2	Si	227.6					

Verifica di stabilità per pressoflessione §C.4.2.4.1.3.3.1 NTC18

X	Comb.	Sfruttamento	Classe	NEd	MxEq,Ed	MyEq,Ed	Area	Wx	Wy	χ,min	λ adim. x/m	λ adim. y/n	N,crit x/m	N,crit y/n	Verifica
0	SLU 117	0.161	1	-5363.6	6457	0	32.19	227.8	51.9	0.422	0.34	1.224	764699.9	59081.4	Si

Verifica di stabilità per pressoflessione SLD §C.4.2.4.1.3.3.1 NTC18

X	Comb.	Sfruttamento	Classe	NEd	MxEq,Ed	MyEq,Ed	Area	Wx	Wy	χ,min	λ adim. x/m	λ adim. y/n	N,crit x/m	N,crit y/n	Verifica
0	SLD 5	0.042	1	-1431.6	1273	0	32.19	227.8	51.9	0.422	0.34	1.224	764699.9	59081.4	Si

Verifica di stabilità a taglio anima Y §4.2.4.1.2.4 [4.2.27] NTC18

η	hw	tw	hw/tw max	Verifica
1.2	17.2	0.9	55.46	Si

Verifica di stabilità a taglio anima Y SLD §4.2.4.1.2.4 [4.2.27] NTC18

η	hw	tw	hw/tw max	Verifica
1.2	17.2	0.9	55.46	Si

Verifiche a deformabilità

Mensola X: No; Mensola Y: No.

Frecce lungo X

Ascissa freccia	Combinazione	Freccia	Luce	L/f	L/f,min	Tipo	Verifica
204.8	SLE RA 1	0	227.6	10000	250	Totale	Si
204.8	SLE RA 31	0	227.6	10000	250	Totale	Si
204.8	SLE RA 30	0	227.6	10000	250	Totale	Si
204.8	SLE RA 29	0	227.6	10000	250	Totale	Si
204.8	SLE RA 28	0	227.6	10000	250	Totale	Si
220	SLE RA 2	0	227.6	10000	350	Variabile	Si
144.2	SLE RA 31	0	227.6	10000	350	Variabile	Si
197.3	SLE RA 30	0	227.6	10000	350	Variabile	Si
204.8	SLE RA 29	0	227.6	10000	350	Variabile	Si
197.3	SLE RA 28	0	227.6	10000	350	Variabile	Si

Frecce lungo Y

Ascissa freccia	Combinazione	Freccia	Luce	L/f	L/f,min	Tipo	Verifica
113.8	SLE RA 1	0.002	227.6	10000	250	Totale	Si
113.8	SLE RA 31	0.012	227.6	10000	250	Totale	Si
113.8	SLE RA 30	0.012	227.6	10000	250	Totale	Si
113.8	SLE RA 29	0.01	227.6	10000	250	Totale	Si
113.8	SLE RA 28	0.01	227.6	10000	250	Totale	Si
204.8	SLE RA 2	0	227.6	10000	350	Variabile	Si
113.8	SLE RA 31	0.01	227.6	10000	350	Variabile	Si
113.8	SLE RA 30	0.01	227.6	10000	350	Variabile	Si
113.8	SLE RA 29	0.008	227.6	10000	350	Variabile	Si
113.8	SLE RA 28	0.008	227.6	10000	350	Variabile	Si

Superelemento in acciaio composto dall'asta 257

Caratteristiche del materiale

Acciaio: S275, fyk = 2750

Caratteristiche geometriche

Lunghezza: 227.6
Nodo iniziale: 15 Nodo finale: 48
Cerniera iniziale: Svincolo: M2, M3 Cerniera finale: Svincolo: M2, M3
Sovraresistenza: 0% Sisma Z: No

Caratteristiche della sezione

Sezione	Rotazione	Area	Jx	Jy	ix	iy	Wx	Wy	Wplx	Wply
UPN200	0	32.19	1911.41	147.68	7.71	2.14	191.14	26.92	227.82	51.87

Verifiche di resistenza

Verifiche a forza assiale §4.2.4.1.2.1 - §4.2.4.1.2.2 NTC18

X	Comb.	Sfruttamento	Classe	NEd	Nc,Rd	Nt,Rd	Riduzione da taglio	ρx	ρy	Verifica
0	SLU 118	0.067	1	-5619.5	84315.5		1	0	0	Si

Verifiche a forza assiale SLD §4.2.4.1.2.1 - §4.2.4.1.2.2 NTC18

X	Comb.	Sfruttamento	Classe	NEd	Nc,Rd	Nt,Rd	Riduzione da taglio	ρx	ρy	Verifica
0	SLD 8	0.017	1	-1431.6	84315.5		1	0	0	Si

Verifica a taglio Y §4.2.4.1.2.4 NTC18

X	Comb.	Sfruttamento	VEd	Vc,Rd	Av	Interazione taglio-torsione	Riduzione torsione	Verifica
0	SLU 118	0.026	670.6	26032.6	17.24	Considerata	1	Si

Verifica a taglio Y SLD §4.2.4.1.2.4 NTC18

X	Comb.	Sfruttamento	VEd	Vc,Rd	Av	Interazione taglio-torsione	Riduzione torsione	Verifica
227.6	SLD 10	0.001	-25.8	26039.2	17.24	Considerata	1	Si

Verifica a torsione §4.2.4.1.2.5 NTC18

X	Comb.	Sfruttamento torsione	TEd	TRd	Riduzione taglio resistente	Sfruttamento taglio-torsione	τEd,totale	τRd	Verifica
227.6	SLV 9	0.009	120.1	14125.9	Considerata				Si

Verifica a torsione SLD §4.2.4.1.2.5 NTC18

X	Comb.	Sfruttamento torsione	TEd	TRd	Riduzione taglio resistente	Sfruttamento taglio-torsione	τEd,totale	τRd	Verifica
227.6	SLD 10	0.003	46.6	14125.9	Considerata				Si

Verifica a presso/tenso flessione retta X §§ 4.2.4.1.2.3 - 4.2.4.1.2.6 - 4.2.4.1.2.7 - 4.2.4.1.2.8 NTC18

Verifiche eseguite utilizzando la formula conservativa (6.2) §6.2.1 EN 1993-1-1:2005.

X	Comb.	Sfruttamento	Classe	NEd	NRd	Rid. NRd da VEd	Mx,Ed	Mx,Rd	Rid. Mx,Rd da VEd	Rid. Mx,Rd da NEd	ρx	ρy	Verifica
98.6	SLU 118	0.121	1	-5307.4	84315.5	1	-34665	596667	1		0	0	Si

Verifica a presso/tenso flessione retta X SLD §§ 4.2.4.1.2.3 - 4.2.4.1.2.6 - 4.2.4.1.2.7 - 4.2.4.1.2.8 NTC18

Verifiche eseguite utilizzando la formula conservativa (6.2) §6.2.1 EN 1993-1-1:2005.

X	Comb.	Sfruttamento	Classe	NEd	NRd	Rid. NRd da VEd	Mx,Ed	Mx,Rd	Rid. Mx,Rd da VEd	Rid. Mx,Rd da NEd	ρx	ρy	Verifica
113.8	SLD 8	0.019	1	-1419	84315.5	1	-1470	596667	1		0	0	Si

Verifiche ad instabilità

Caratteristiche iniziali

Membratura principale per controllo snellezza; Calcolo di snellezze ed N critici condotti secondo gli assi principali;
Curva X: c; Curva Y: c;
Svergolamento: Nessuno; la verifica a instabilità flesso-torsionale (svergolamento) non verrà eseguita.

Dati per instabilità attorno a x

Numero rit.	Presente	Ascissa	Campata	βx/m	Vincolo a entrambi estremi	λx/m	λVer
1	Si	0					
			1-2	1	Si	29.5	Si, (<200)
2	Si	227.6					

Dati per instabilità attorno a y

Numero rit.	Presente	Ascissa	Campata	βy/n	k,LT	kw,LT	Vincolo a entrambi estremi
1	Si	0					
			1-2	1	Si	106.3	Si, (<200)
2	Si	227.6					

Verifica di stabilità per pressoflessione §C.4.2.4.1.3.3.1 NTC18

X	Comb.	Sfruttamento	Classe	NEd	MxEq,Ed	MyEq,Ed	Area	Wx	Wy	χ,min	λ adim. x/m	λ adim. y/n	N,crit x/m	N,crit y/n	Verifica
0	SLU 85	0.209	1	-5619.5	-30467	0	32.19	227.8	51.9	0.422	0.34	1.224	764699.9	59081.4	Si

Verifica di stabilità per pressoflessione SLD §C.4.2.4.1.3.3.1 NTC18

X	Comb.	Sfruttamento	Classe	NEd	MxEq,Ed	MyEq,Ed	Area	Wx	Wy	χ,min	λ adim. x/m	λ adim. y/n	N,crit x/m	N,crit y/n	Verifica
0	SLD 8	0.042	1	-1431.6	-1273	0	32.19	227.8	51.9	0.422	0.34	1.224	764699.9	59081.4	Si

Verifica di stabilità a taglio anima Y §4.2.4.1.2.4 [4.2.27] NTC18

η	hw	tw	hw/tw max	Verifica
1.2	17.2	0.9	55.46	Si

Verifica di stabilità a taglio anima Y SLD §4.2.4.1.2.4 [4.2.27] NTC18

η	hw	tw	hw/tw max	Verifica
1.2	17.2	0.9	55.46	Si

Verifiche a deformabilità

Mensola X: No; Mensola Y: No.

Frecce lungo X

Ascissa freccia	Combinazione	Freccia	Luce	L/f	L/f,min	Tipo	Verifica
204.8	SLE RA 1	0	227.6	10000	250	Totale	Si
159.3	SLE RA 31	0	227.6	10000	250	Totale	Si
174.5	SLE RA 30	0	227.6	10000	250	Totale	Si
129	SLE RA 29	0	227.6	10000	250	Totale	Si
204.8	SLE RA 28	0	227.6	10000	250	Totale	Si
129	SLE RA 2	0	227.6	10000	350	Variabile	Si
204.8	SLE RA 31	0	227.6	10000	350	Variabile	Si
166.9	SLE RA 30	0	227.6	10000	350	Variabile	Si
189.7	SLE RA 29	0	227.6	10000	350	Variabile	Si
174.5	SLE RA 28	0	227.6	10000	350	Variabile	Si

Frecce lungo Y

Ascissa freccia	Combinazione	Freccia	Luce	L/f	L/f,min	Tipo	Verifica
113.8	SLE RA 18	-0.033	227.6	6841.6	250	Totale	Si
113.8	SLE RA 6	-0.033	227.6	6841.6	250	Totale	Si
113.8	SLE RA 7	-0.033	227.6	6841.6	250	Totale	Si
113.8	SLE RA 19	-0.033	227.6	6841.6	250	Totale	Si
113.8	SLE RA 15	-0.031	227.6	7267.4	250	Totale	Si
113.8	SLE RA 7	-0.031	227.6	7297.9	350	Variabile	Si
113.8	SLE RA 19	-0.031	227.6	7297.9	350	Variabile	Si
113.8	SLE RA 18	-0.031	227.6	7297.9	350	Variabile	Si
113.8	SLE RA 6	-0.031	227.6	7297.9	350	Variabile	Si
113.8	SLE RA 3	-0.029	227.6	7784.4	350	Variabile	Si

Superelemento in acciaio composto dall'asta 258

Caratteristiche del materiale

Acciaio: S275, fyk = 2750

Caratteristiche geometriche

Lunghezza: 227.6
Nodo iniziale: 13 Nodo finale: 52
Cerniera iniziale: Svincolo: M2, M3 Cerniera finale: Svincolo: M2, M3
Sovraresistenza: 0% Sisma Z: No

Caratteristiche della sezione

Sezione	Rotazione	Area	Jx	Jy	ix	iy	Wx	Wy	Wplx	Wply
UPN200	180	32.19	1911.41	147.68	7.71	2.14	191.14	26.92	227.82	51.87

Verifiche di resistenza

Verifiche a forza assiale §4.2.4.1.2.1 - §4.2.4.1.2.2 NTC18

X	Comb.	Sfruttamento	Classe	NEd	Nc,Rd	Nt,Rd	Riduzione da taglio	ρx	ρy	Verifica
0	SLU 84	0.078	1	-6585.4	84315.5		1	0	0	Si

Verifiche a forza assiale SLD §4.2.4.1.2.1 - §4.2.4.1.2.2 NTC18

X	Comb.	Sfruttamento	Classe	NEd	Nc,Rd	Nt,Rd	Riduzione da taglio	ρx	ρy	Verifica
0	SLD 5	0.017	1	-1410.7	84315.5		1	0	0	Si

Verifica a taglio Y §4.2.4.1.2.4 NTC18

X	Comb.	Sfruttamento	VEd	Vc,Rd	Av	Interazione taglio-torsione	Riduzione torsione	Verifica
0	SLU 106	0.026	-670.6	26035.8	17.24	Considerata	1	Si

Verifica a taglio Y SLD §4.2.4.1.2.4 NTC18

X	Comb.	Sfruttamento	VEd	Vc,Rd	Av	Interazione taglio-torsione	Riduzione torsione	Verifica
227.6	SLD 12	0.001	25.8	26039.2	17.24	Considerata	1	Si

Verifica a torsione §4.2.4.1.2.5 NTC18

X	Comb.	Sfruttamento torsione	TEd	TRd	Riduzione taglio resistente	Sfruttamento taglio-torsione	τEd,totale	τRd	Verifica
220	SLV 11	0.009	-120.1	14125.9	Considerata				Si

Verifica a torsione SLD §4.2.4.1.2.5 NTC18

X	Comb.	Sfruttamento torsione	TEd	TRd	Riduzione taglio resistente	Sfruttamento taglio-torsione	τEd,totale	τRd	Verifica
106.2	SLD 12	0.003	-46.6	14125.9	Considerata				Si

Verifica a presso/tenso flessione retta X §§ 4.2.4.1.2.3 - 4.2.4.1.2.6 - 4.2.4.1.2.7 - 4.2.4.1.2.8 NTC18

Verifiche eseguite utilizzando la formula conservativa (6.2) §6.2.1 EN 1993-1-1:2005.

X	Comb.	Sfruttamento	Classe	NEd	NRd	Rid. NRd da VEd	Mx,Ed	Mx,Rd	Rid. Mx,Rd da VEd	Rid. Mx,Rd da NEd	ρx	ρy	Verifica
98.6	SLU 84	0.132	1	-6273.3	84315.5	1	34665	596667	1		0	0	Si

Verifica a presso/tenso flessione retta X SLD §§ 4.2.4.1.2.3 - 4.2.4.1.2.6 - 4.2.4.1.2.7 - 4.2.4.1.2.8 NTC18

Verifiche eseguite utilizzando la formula conservativa (6.2) §6.2.1 EN 1993-1-1:2005.

X	Comb.	Sfruttamento	Classe	NEd	NRd	Rid. NRd da VEd	Mx,Ed	Mx,Rd	Rid. Mx,Rd da VEd	Rid. Mx,Rd da NEd	ρx	ρy	Verifica
113.8	SLD 5	0.019	1	-1398.1	84315.5	1	1470	596667	1		0	0	Si

Verifiche ad instabilità

Caratteristiche iniziali

Membratura principale per controllo snellezza; Calcolo di snellezze ed N critici condotti secondo gli assi principali;
Curva X: c; Curva Y: c;
Svergolamento: Nessuno; la verifica a instabilità flesso-torsionale (svergolamento) non verrà eseguita.

Dati per instabilità attorno a x

Numero rit.	Presente	Ascissa	Campata	βx/m	Vincolo a entrambi estremi	λx/m	λVer
1	Si	0					
			1-2	1	Si	29.5	Si, (<200)
2	Si	227.6					

Dati per instabilità attorno a y

Numero rit.	Presente	Ascissa	Campata	βy/n	k,LT	kw,LT	Vincolo a entrambi estremi
1	Si	0					
			1-2	1	Si	106.3	Si, (<200)
2	Si	227.6					

Verifica di stabilità per pressoflessione §C.4.2.4.1.3.3.1 NTC18

X	Comb.	Sfruttamento	Classe	NEd	MxEq,Ed	MyEq,Ed	Area	Wx	Wy	χ,min	λ adim. x/m	λ adim. y/n	N,crit x/m	N,crit y/n	Verifica
0	SLU 84	0.236	1	-6585.4	30467	0	32.19	227.8	51.9	0.422	0.34	1.224	764699.9	59081.4	Si

Verifica di stabilità per pressoflessione SLD §C.4.2.4.1.3.3.1 NTC18

X	Comb.	Sfruttamento	Classe	NEd	MxEq,Ed	MyEq,Ed	Area	Wx	Wy	χ,min	λ adim. x/m	λ adim. y/n	N,crit x/m	N,crit y/n	Verifica
0	SLD 5	0.042	1	-1410.7	1273	0	32.19	227.8	51.9	0.422	0.34	1.224	764699.9	59081.4	Si

Verifica di stabilità a taglio anima Y §4.2.4.1.2.4 [4.2.27] NTC18

η	hw	tw	hw/tw max	Verifica
1.2	17.2	0.9	55.46	Si

Verifica di stabilità a taglio anima Y SLD §4.2.4.1.2.4 [4.2.27] NTC18

η	hw	tw	hw/tw max	Verifica
1.2	17.2	0.9	55.46	Si

Verifiche a deformabilità

Mensola X: No; Mensola Y: No.

Frecce lungo X

Ascissa freccia	Combinazione	Freccia	Luce	L/f	L/f,min	Tipo	Verifica
136.6	SLE RA 1	0	227.6	10000	250	Totale	Si
204.8	SLE RA 31	0	227.6	10000	250	Totale	Si
136.6	SLE RA 30	0	227.6	10000	250	Totale	Si
204.8	SLE RA 29	0	227.6	10000	250	Totale	Si
136.6	SLE RA 28	0	227.6	10000	250	Totale	Si
204.8	SLE RA 2	0	227.6	10000	350	Variabile	Si

Ascissa freccia	Combinazione	Freccia	Luce	L/f	L/f,min	Tipo	Verifica
204.8	SLE RA 31	0	227.6	10000	350	Variabile	Si
212.4	SLE RA 30	0	227.6	10000	350	Variabile	Si
204.8	SLE RA 29	0	227.6	10000	350	Variabile	Si
151.7	SLE RA 28	0	227.6	10000	350	Variabile	Si

Frecce lungo Y

Ascissa freccia	Combinazione	Freccia	Luce	L/f	L/f,min	Tipo	Verifica
113.8	SLE RA 18	0.033	227.6	6841.6	250	Totale	Si
113.8	SLE RA 6	0.033	227.6	6841.6	250	Totale	Si
113.8	SLE RA 7	0.033	227.6	6841.6	250	Totale	Si
113.8	SLE RA 19	0.033	227.6	6841.6	250	Totale	Si
113.8	SLE RA 2	0.031	227.6	7267.4	250	Totale	Si
113.8	SLE RA 6	0.031	227.6	7297.9	350	Variabile	Si
113.8	SLE RA 18	0.031	227.6	7297.9	350	Variabile	Si
113.8	SLE RA 7	0.031	227.6	7297.9	350	Variabile	Si
113.8	SLE RA 19	0.031	227.6	7297.9	350	Variabile	Si
113.8	SLE RA 2	0.029	227.6	7784.4	350	Variabile	Si

Superelemento in acciaio composto dall'asta 259

Caratteristiche del materiale

Acciaio: S275, fyk = 2750

Caratteristiche geometriche

Lunghezza: 227.6
Nodo iniziale: 17 Nodo finale: 52
Cerniera iniziale: Svincolo: M2, M3 Cerniera finale: Svincolo: M2, M3
Sovraresistenza: 0% Sisma Z: No

Caratteristiche della sezione

Sezione	Rotazione	Area	Jx	Jy	ix	iy	Wx	Wy	Wplx	Wply
UPN200	0	32.19	1911.41	147.68	7.71	2.14	191.14	26.92	227.82	51.87

Verifiche di resistenza

Verifiche a forza assiale §4.2.4.1.2.1 - §4.2.4.1.2.2 NTC18

X	Comb.	Sfruttamento	Classe	NEd	Nc,Rd	Nt,Rd	Riduzione da taglio	ρx	ρy	Verifica
0	SLU 106	0.079	1	-6634.4	84315.5		1	0	0	Si

Verifiche a forza assiale SLD §4.2.4.1.2.1 - §4.2.4.1.2.2 NTC18

X	Comb.	Sfruttamento	Classe	NEd	Nc,Rd	Nt,Rd	Riduzione da taglio	ρx	ρy	Verifica
0	SLD 8	0.017	1	-1447.1	84315.5		1	0	0	Si

Verifica a taglio Y §4.2.4.1.2.4 NTC18

X	Comb.	Sfruttamento	VEd	Vc,Rd	Av	Interazione taglio-torsione	Riduzione torsione	Verifica
0	SLU 85	0.026	670.6	26045.7	17.24	Considerata	1	Si

Verifica a taglio Y SLD §4.2.4.1.2.4 NTC18

X	Comb.	Sfruttamento	VEd	Vc,Rd	Av	Interazione taglio-torsione	Riduzione torsione	Verifica
227.6	SLD 9	0.001	-25.8	26039.4	17.24	Considerata	1	Si

Verifica a torsione §4.2.4.1.2.5 NTC18

X	Comb.	Sfruttamento torsione	TEd	TRd	Riduzione taglio resistente	Sfruttamento taglio-torsione	τEd,totale	τRd	Verifica
220	SLV 10	0.008	119.9	14125.9	Considerata				Si

Verifica a torsione SLD §4.2.4.1.2.5 NTC18

X	Comb.	Sfruttamento torsione	TEd	TRd	Riduzione taglio resistente	Sfruttamento taglio-torsione	τEd,totale	τRd	Verifica
15.2	SLD 9	0.003	46.3	14125.9	Considerata				Si

Verifica a presso/tenso flessione retta X §§ 4.2.4.1.2.3 - 4.2.4.1.2.6 - 4.2.4.1.2.7 - 4.2.4.1.2.8 NTC18

Verifiche eseguite utilizzando la formula conservativa (6.2) §6.2.1 EN 1993-1-1:2005.

X	Comb.	Sfruttamento	Classe	NEd	NRd	Rid. NRd da VEd	Mx,Ed	Mx,Rd	Rid. Mx,Rd da VEd	Rid. Mx,Rd da NEd	ρx	ρy	Verifica
98.6	SLU 106	0.133	1	-6322.3	84315.5	1	-34665	596667	1		0	0	Si

Verifica a presso/tenso flessione retta X SLD §§ 4.2.4.1.2.3 - 4.2.4.1.2.6 - 4.2.4.1.2.7 - 4.2.4.1.2.8 NTC18

Verifiche eseguite utilizzando la formula conservativa (6.2) §6.2.1 EN 1993-1-1:2005.

X	Comb.	Sfruttamento	Classe	NEd	NRd	Rid. NRd da VEd	Mx,Ed	Mx,Rd	Rid. Mx,Rd da VEd	Rid. Mx,Rd da NEd	ρx	ρy	Verifica
113.8	SLD 8	0.019	1	-1434.5	84315.5	1	-1470	596667	1		0	0	Si

Verifiche ad instabilità

Caratteristiche iniziali

Membratura principale per controllo snellezza; Calcolo di snellezze ed N critici condotti secondo gli assi principali;
Curva X: c; Curva Y: c;
Svergolamento: Nessuno; la verifica a instabilità flesso-torsionale (svergolamento) non verrà eseguita.

Dati per instabilità attorno a x

Numero rit.	Presente	Ascissa	Campata	βx/m	Vincolo a entrambi estremi	λx/m	λVer
1	Si	0					
			1-2	1	Si	29.5	Si, (<200)
2	Si	227.6					

Dati per instabilità attorno a y

Numero rit.	Presente	Ascissa	Campata	βy/n	k,LT	kw,LT	Vincolo a entrambi estremi
1	Si	0					
			1-2	1	Si	106.3	Si, (<200)
2	Si	227.6					

Verifica di stabilità per pressoflessione §C.4.2.4.1.3.3.1 NTC18

X	Comb.	Sfruttamento	Classe	NEd	MxEq,Ed	MyEq,Ed	Area	Wx	Wy	χ,min	λ adim. x/m	λ adim. y/n	N,crit x/m	N,crit y/n	Verifica
0	SLU 73	0.238	1	-6634.4	-30467	0	32.19	227.8	51.9	0.422	0.34	1.224	764699.9	59081.4	Si

Verifica di stabilità per pressoflessione SLD §C.4.2.4.1.3.3.1 NTC18

X	Comb.	Sfruttamento	Classe	NEd	MxEq,Ed	MyEq,Ed	Area	Wx	Wy	χ,min	λ adim. x/m	λ adim. y/n	N,crit x/m	N,crit y/n	Verifica
0	SLD 8	0.043	1	-1447.1	-1273	0	32.19	227.8	51.9	0.422	0.34	1.224	764699.9	59081.4	Si

Verifica di stabilità a taglio anima Y §4.2.4.1.2.4 [4.2.27] NTC18

η	hw	tw	hw/tw max	Verifica
1.2	17.2	0.9	55.46	Si

Verifica di stabilità a taglio anima Y SLD §4.2.4.1.2.4 [4.2.27] NTC18

η	hw	tw	hw/tw max	Verifica
1.2	17.2	0.9	55.46	Si

Verifiche a deformabilità

Mensola X: No; Mensola Y: No.

Frecce lungo X

Ascissa freccia	Combinazione	Freccia	Luce	L/f	L/f,min	Tipo	Verifica
220	SLE RA 1	0	227.6	10000	250	Totale	Si
151.7	SLE RA 31	0	227.6	10000	250	Totale	Si
220	SLE RA 30	0	227.6	10000	250	Totale	Si
151.7	SLE RA 29	0	227.6	10000	250	Totale	Si
220	SLE RA 28	0	227.6	10000	250	Totale	Si
151.7	SLE RA 2	0	227.6	10000	350	Variabile	Si
151.7	SLE RA 31	0	227.6	10000	350	Variabile	Si
220	SLE RA 30	0	227.6	10000	350	Variabile	Si
151.7	SLE RA 29	0	227.6	10000	350	Variabile	Si
204.8	SLE RA 28	0	227.6	10000	350	Variabile	Si

Frecce lungo Y

Ascissa freccia	Combinazione	Freccia	Luce	L/f	L/f,min	Tipo	Verifica
113.8	SLE RA 19	-0.033	227.6	6841.6	250	Totale	Si
113.8	SLE RA 18	-0.033	227.6	6841.6	250	Totale	Si
113.8	SLE RA 6	-0.033	227.6	6841.6	250	Totale	Si
113.8	SLE RA 7	-0.033	227.6	6841.6	250	Totale	Si
113.8	SLE RA 14	-0.031	227.6	7267.4	250	Totale	Si
113.8	SLE RA 6	-0.031	227.6	7297.9	350	Variabile	Si
113.8	SLE RA 7	-0.031	227.6	7297.9	350	Variabile	Si
113.8	SLE RA 19	-0.031	227.6	7297.9	350	Variabile	Si
113.8	SLE RA 18	-0.031	227.6	7297.9	350	Variabile	Si
113.8	SLE RA 2	-0.029	227.6	7784.4	350	Variabile	Si

Superelemento in acciaio composto dall'asta 260

Caratteristiche del materiale

Acciaio: S275, fyk = 2750

Caratteristiche geometriche

Lunghezza: 227.6
Nodo iniziale: 15 Nodo finale: 56
Cerniera iniziale: Svincolo: M2, M3 Cerniera finale: Svincolo: M2, M3
Sovraresistenza: 0% Sisma Z: No

Caratteristiche della sezione

Sezione	Rotazione	Area	Jx	Jy	ix	iy	Wx	Wy	Wplx	Wply
UPN200	180	32.19	1911.41	147.68	7.71	2.14	191.14	26.92	227.82	51.87

Verifiche di resistenza

Verifiche a forza assiale §4.2.4.1.2.1 - §4.2.4.1.2.2 NTC18

X	Comb.	Sfruttamento	Classe	NEd	Nc,Rd	Nt,Rd	Riduzione da taglio	ρx	ρy	Verifica
0	SLU 118	0.051	1	-4277.3	84315.5		1	0	0	Si

Verifiche a forza assiale SLD §4.2.4.1.2.1 - §4.2.4.1.2.2 NTC18

X	Comb.	Sfruttamento	Classe	NEd	Nc,Rd	Nt,Rd	Riduzione da taglio	ρx	ρy	Verifica
0	SLD 5	0.016	1	-1364.3	84315.5		1	0	0	Si

Verifica a taglio Y §4.2.4.1.2.4 NTC18

X	Comb.	Sfruttamento	VEd	Vc,Rd	Av	Interazione taglio-torsione	Riduzione torsione	Verifica
0	SLU 118	0.026	-670.6	26035.8	17.24	Considerata	1	Si

Verifica a taglio Y SLD §4.2.4.1.2.4 NTC18

X	Comb.	Sfruttamento	VEd	Vc,Rd	Av	Interazione taglio-torsione	Riduzione torsione	Verifica
227.6	SLD 12	0.001	25.8	26039.2	17.24	Considerata	1	Si

Verifica a torsione §4.2.4.1.2.5 NTC18

X	Comb.	Sfruttamento torsione	TEd	TRd	Riduzione taglio resistente	Sfruttamento taglio-torsione	τEd,totale	τRd	Verifica
220	SLV 11	0.009	-120.2	14125.9	Considerata				Si

Verifica a torsione SLD §4.2.4.1.2.5 NTC18

X	Comb.	Sfruttamento torsione	TEd	TRd	Riduzione taglio resistente	Sfruttamento taglio-torsione	τEd,totale	τRd	Verifica
106.2	SLD 12	0.003	-46.5	14125.9	Considerata				Si

Verifica a presso/tenso flessione retta X §§ 4.2.4.1.2.3 - 4.2.4.1.2.6 - 4.2.4.1.2.7 - 4.2.4.1.2.8 NTC18

Verifiche eseguite utilizzando la formula conservativa (6.2) §6.2.1 EN 1993-1-1:2005.

X	Comb.	Sfruttamento	Classe	NEd	NRd	Rid. NRd da VEd	Mx,Ed	Mx,Rd	Rid. Mx,Rd da VEd	Rid. Mx,Rd da NEd	ρx	ρy	Verifica
98.6	SLU 85	0.105	1	-3965.1	84315.5	1	34665	596667	1		0	0	Si

Verifica a presso/tenso flessione retta X SLD §§ 4.2.4.1.2.3 - 4.2.4.1.2.6 - 4.2.4.1.2.7 - 4.2.4.1.2.8 NTC18

Verifiche eseguite utilizzando la formula conservativa (6.2) §6.2.1 EN 1993-1-1:2005.

X	Comb.	Sfruttamento	Classe	NEd	NRd	Rid. NRd da VEd	Mx,Ed	Mx,Rd	Rid. Mx,Rd da VEd	Rid. Mx,Rd da NEd	ρx	ρy	Verifica
113.8	SLD 5	0.018	1	-1351.7	84315.5	1	1470	596667	1		0	0	Si

Verifiche ad instabilità

Caratteristiche iniziali

Membratura principale per controllo snellezza; Calcolo di snellezze ed N critici condotti secondo gli assi principali;
Curva X: c; Curva Y: c;
Svergolamento: Nessuno; la verifica a instabilità flesso-torsionale (svergolamento) non verrà eseguita.

Dati per instabilità attorno a x

Numero rit.	Presente	Ascissa	Campata	βx/m	Vincolo a entrambi estremi	λx/m	λVer
1	Si	0					
			1-2	1	Si	29.5	Si, (<200)
2	Si	227.6					

Dati per instabilità attorno a y

Numero rit.	Presente	Ascissa	Campata	βy/n	k,LT	kw,LT	Vincolo a entrambi estremi
1	Si	0					
			1-2	1	Si	106.3	Si, (<200)
2	Si	227.6					

Verifica di stabilità per pressoflessione §C.4.2.4.1.3.3.1 NTC18

X	Comb.	Sfruttamento	Classe	NEd	MxEq,Ed	MyEq,Ed	Area	Wx	Wy	χ,min	λ adim. x/m	λ adim. y/n	N,crit x/m	N,crit y/n	Verifica
0	SLU 85	0.171	1	-4277.3	30467	0	32.19	227.8	51.9	0.422	0.34	1.224	764699.9	59081.4	Si

Verifica di stabilità per pressoflessione SLD §C.4.2.4.1.3.3.1 NTC18

X	Comb.	Sfruttamento	Classe	NEd	MxEq,Ed	MyEq,Ed	Area	Wx	Wy	χ,min	λ adim. x/m	λ adim. y/n	N,crit x/m	N,crit y/n	Verifica
0	SLD 5	0.04	1	-1364.3	1273	0	32.19	227.8	51.9	0.422	0.34	1.224	764699.9	59081.4	Si

Verifica di stabilità a taglio anima Y §4.2.4.1.2.4 [4.2.27] NTC18

η	hw	tw	hw/tw max	Verifica
1.2	17.2	0.9	55.46	Si

Verifica di stabilità a taglio anima Y SLD §4.2.4.1.2.4 [4.2.27] NTC18

η	hw	tw	hw/tw max	Verifica
1.2	17.2	0.9	55.46	Si

Verifiche a deformabilità

Mensola X: No; Mensola Y: No.

Frecce lungo X

Ascissa freccia	Combinazione	Freccia	Luce	L/f	L/f,min	Tipo	Verifica
212.4	SLE RA 1	0	227.6	10000	250	Totale	Si
204.8	SLE RA 31	0	227.6	10000	250	Totale	Si
174.5	SLE RA 30	0	227.6	10000	250	Totale	Si
204.8	SLE RA 29	0	227.6	10000	250	Totale	Si
212.4	SLE RA 28	0	227.6	10000	250	Totale	Si
204.8	SLE RA 2	0	227.6	10000	350	Variabile	Si
204.8	SLE RA 31	0	227.6	10000	350	Variabile	Si
212.4	SLE RA 30	0	227.6	10000	350	Variabile	Si
204.8	SLE RA 29	0	227.6	10000	350	Variabile	Si
189.7	SLE RA 28	0	227.6	10000	350	Variabile	Si

Frecce lungo Y

Ascissa freccia	Combinazione	Freccia	Luce	L/f	L/f,min	Tipo	Verifica
113.8	SLE RA 18	0.033	227.6	6841.6	250	Totale	Si
113.8	SLE RA 6	0.033	227.6	6841.6	250	Totale	Si
113.8	SLE RA 7	0.033	227.6	6841.6	250	Totale	Si
113.8	SLE RA 19	0.033	227.6	6841.6	250	Totale	Si

Ascissa freccia	Combinazione	Freccia	Luce	L/f	L/f,min	Tipo	Verifica
113.8	SLE RA 2	0.031	227.6	7267.4	250	Totale	Si
113.8	SLE RA 6	0.031	227.6	7297.9	350	Variabile	Si
113.8	SLE RA 19	0.031	227.6	7297.9	350	Variabile	Si
113.8	SLE RA 18	0.031	227.6	7297.9	350	Variabile	Si
113.8	SLE RA 7	0.031	227.6	7297.9	350	Variabile	Si
113.8	SLE RA 2	0.029	227.6	7784.4	350	Variabile	Si

Superelemento in acciaio composto dall'asta 261

Caratteristiche del materiale

Acciaio: S275, fyk = 2750

Caratteristiche geometriche

Lunghezza: 227.6
Nodo iniziale: 19 Nodo finale: 56
Cerniera iniziale: Svincolo: M2, M3 Cerniera finale: Svincolo: M2, M3
Sovraresistenza: 0% Sisma Z: No

Caratteristiche della sezione

Sezione	Rotazione	Area	Jx	Jy	ix	iy	Wx	Wy	Wplx	Wply
UPN200	0	32.19	1911.41	147.68	7.71	2.14	191.14	26.92	227.82	51.87

Verifiche di resistenza

Verifiche a forza assiale §4.2.4.1.2.1 - §4.2.4.1.2.2 NTC18

X	Comb.	Sfruttamento	Classe	NEd	Nc,Rd	Nt,Rd	Riduzione da taglio	ρx	ρy	Verifica
0	SLU 85	0.049	1	-4152.9	84315.5		1	0	0	Si

Verifiche a forza assiale SLD §4.2.4.1.2.1 - §4.2.4.1.2.2 NTC18

X	Comb.	Sfruttamento	Classe	NEd	Nc,Rd	Nt,Rd	Riduzione da taglio	ρx	ρy	Verifica
0	SLD 8	0.017	1	-1462	84315.5		1	0	0	Si

Verifica a taglio Y §4.2.4.1.2.4 NTC18

X	Comb.	Sfruttamento	VEd	Vc,Rd	Av	Interazione taglio-torsione	Riduzione torsione	Verifica
0	SLU 132	0.009	239.4	26064	17.24	Considerata	1	Si

Verifica a taglio Y SLD §4.2.4.1.2.4 NTC18

X	Comb.	Sfruttamento	VEd	Vc,Rd	Av	Interazione taglio-torsione	Riduzione torsione	Verifica
227.6	SLD 9	0.001	-25.8	26037.7	17.24	Considerata	1	Si

Verifica a torsione §4.2.4.1.2.5 NTC18

X	Comb.	Sfruttamento torsione	TEd	TRd	Riduzione taglio resistente	Sfruttamento taglio-torsione	τEd,totale	τRd	Verifica
220	SLV 10	0.009	121.1	14125.9	Considerata				Si

Verifica a torsione SLD §4.2.4.1.2.5 NTC18

X	Comb.	Sfruttamento torsione	TEd	TRd	Riduzione taglio resistente	Sfruttamento taglio-torsione	τEd,totale	τRd	Verifica
7.6	SLD 9	0.003	48.5	14125.9	Considerata				Si

Verifica a presso/tenso flessione retta X §§ 4.2.4.1.2.3 - 4.2.4.1.2.6 - 4.2.4.1.2.7 - 4.2.4.1.2.8 NTC18

Verifiche eseguite utilizzando la formula conservativa (6.2) §6.2.1 EN 1993-1-1:2005.

X	Comb.	Sfruttamento	Classe	NEd	NRd	Rid. NRd da VEd	Mx,Ed	Mx,Rd	Rid. Mx,Rd da VEd	Rid. Mx,Rd da NEd	ρx	ρy	Verifica
98.6	SLU 99	0.063	1	-3579.6	84315.5	1	-12508	596667	1		0	0	Si

Verifica a presso/tenso flessione retta X SLD §§ 4.2.4.1.2.3 - 4.2.4.1.2.6 - 4.2.4.1.2.7 - 4.2.4.1.2.8 NTC18

Verifiche eseguite utilizzando la formula conservativa (6.2) §6.2.1 EN 1993-1-1:2005.

X	Comb.	Sfruttamento	Classe	NEd	NRd	Rid. NRd da VEd	Mx,Ed	Mx,Rd	Rid. Mx,Rd da VEd	Rid. Mx,Rd da NEd	ρx	ρy	Verifica
113.8	SLD 7	0.02	1	-1449.3	84315.5	1	-1470	596667	1		0	0	Si

Verifiche ad instabilità

Caratteristiche iniziali

Membratura principale per controllo snellezza; Calcolo di snellezze ed N critici condotti secondo gli assi principali;
Curva X: c; Curva Y: c;
Svergolamento: Nessuno; la verifica a instabilità flesso-torsionale (svergolamento) non verrà eseguita.

Dati per instabilità attorno a x

Numero rit.	Presente	Ascissa	Campata	βx/m	Vincolo a entrambi estremi	λx/m	λVer
1	Si	0					
			1-2	1	Si	29.5	Si, (<200)
2	Si	227.6					

Dati per instabilità attorno a y

Numero rit.	Presente	Ascissa	Campata	βy/n	k,LT	kw,LT	Vincolo a entrambi estremi
1	Si	0					
			1-2	1	Si	106.3	Si, (<200)

Numero rit.	Presente	Ascissa	Campata	βy/n	k,LT	kw,LT	Vincolo a entrambi estremi
2	Si	227.6					

Verifica di stabilità per pressoflessione §C.4.2.4.1.3.3.1 NTC18

X	Comb.	Sfruttamento	Classe	NEd	MxEq,Ed	MyEq,Ed	Area	Wx	Wy	χ,min	λ adim. x/m	λ adim. y/n	N,crit x/m	N,crit y/n	Verifica
0	SLU 118	0.128	1	-4152.9	-6473	0	32.19	227.8	51.9	0.422	0.34	1.224	764699.9	59081.4	Si

Verifica di stabilità per pressoflessione SLD §C.4.2.4.1.3.3.1 NTC18

X	Comb.	Sfruttamento	Classe	NEd	MxEq,Ed	MyEq,Ed	Area	Wx	Wy	χ,min	λ adim. x/m	λ adim. y/n	N,crit x/m	N,crit y/n	Verifica
0	SLD 8	0.043	1	-1462	-1273	0	32.19	227.8	51.9	0.422	0.34	1.224	764699.9	59081.4	Si

Verifica di stabilità a taglio anima Y §4.2.4.1.2.4 [4.2.27] NTC18

η	hw	tw	hw/tw max	Verifica
1.2	17.2	0.9	55.46	Si

Verifica di stabilità a taglio anima Y SLD §4.2.4.1.2.4 [4.2.27] NTC18

η	hw	tw	hw/tw max	Verifica
1.2	17.2	0.9	55.46	Si

Verifiche a deformabilità

Mensola X: No; Mensola Y: No.

Frecce lungo X

Ascissa freccia	Combinazione	Freccia	Luce	L/f	L/f,min	Tipo	Verifica
189.7	SLE RA 1	0	227.6	10000	250	Totale	Si
151.7	SLE RA 31	0	227.6	10000	250	Totale	Si
189.7	SLE RA 30	0	227.6	10000	250	Totale	Si
151.7	SLE RA 29	0	227.6	10000	250	Totale	Si
189.7	SLE RA 28	0	227.6	10000	250	Totale	Si
151.7	SLE RA 2	0	227.6	10000	350	Variabile	Si
151.7	SLE RA 31	0	227.6	10000	350	Variabile	Si
212.4	SLE RA 30	0	227.6	10000	350	Variabile	Si
151.7	SLE RA 29	0	227.6	10000	350	Variabile	Si
220	SLE RA 28	0	227.6	10000	350	Variabile	Si

Frecce lungo Y

Ascissa freccia	Combinazione	Freccia	Luce	L/f	L/f,min	Tipo	Verifica
113.8	SLE RA 1	-0.002	227.6	10000	250	Totale	Si
113.8	SLE RA 31	-0.012	227.6	10000	250	Totale	Si
113.8	SLE RA 30	-0.012	227.6	10000	250	Totale	Si
113.8	SLE RA 29	-0.01	227.6	10000	250	Totale	Si
113.8	SLE RA 28	-0.01	227.6	10000	250	Totale	Si
204.8	SLE RA 2	0	227.6	10000	350	Variabile	Si
113.8	SLE RA 31	-0.01	227.6	10000	350	Variabile	Si
113.8	SLE RA 30	-0.01	227.6	10000	350	Variabile	Si
113.8	SLE RA 29	-0.008	227.6	10000	350	Variabile	Si
113.8	SLE RA 28	-0.008	227.6	10000	350	Variabile	Si

Superelemento in acciaio composto dall'asta 262

Caratteristiche del materiale

Acciaio: S275, fyk = 2750

Caratteristiche geometriche

Lunghezza: 227.6
Nodo iniziale: 17 Nodo finale: 60
Cerniera iniziale: Svincolo: M2, M3 Cerniera finale: Svincolo: M2, M3
Sovraresistenza: 0% Sisma Z: No

Caratteristiche della sezione

Sezione	Rotazione	Area	Jx	Jy	ix	iy	Wx	Wy	Wplx	Wply
UPN200	180	32.19	1911.41	147.68	7.71	2.14	191.14	26.92	227.82	51.87

Verifiche di resistenza

Verifiche a forza assiale §4.2.4.1.2.1 - §4.2.4.1.2.2 NTC18

X	Comb.	Sfruttamento	Classe	NEd	Nc,Rd	Nt,Rd	Riduzione da taglio	ρx	ρy	Verifica
0	SLU 131	0.043	1	-3622.5	84315.5		1	0	0	Si

Verifiche a forza assiale SLD §4.2.4.1.2.1 - §4.2.4.1.2.2 NTC18

X	Comb.	Sfruttamento	Classe	NEd	Nc,Rd	Nt,Rd	Riduzione da taglio	ρx	ρy	Verifica
0	SLD 5	0.028	1	-2351.7	84315.5		1	0	0	Si

Verifica a taglio Y §4.2.4.1.2.4 NTC18

X	Comb.	Sfruttamento	VEd	Vc,Rd	Av	Interazione taglio-torsione	Riduzione torsione	Verifica
0	SLU 131	0.009	-238.3	26064.8	17.24	Considerata	1	Si

Verifica a taglio Y SLD §4.2.4.1.2.4 NTC18

X	Comb.	Sfruttamento	VEd	Vc,Rd	Av	Interazione taglio-torsione	Riduzione torsione	Verifica
227.6	SLD 9	0.001	25.8	26029.8	17.24	Considerata	1	Si

Verifica a torsione §4.2.4.1.2.5 NTC18

X	Comb.	Sfruttamento torsione	TEd	TRd	Riduzione taglio resistente	Sfruttamento taglio-torsione	τEd,totale	τRd	Verifica
227.6	SLV 9	0.01	141.4	14125.9	Considerata				Si

Verifica a torsione SLD §4.2.4.1.2.5 NTC18

X	Comb.	Sfruttamento torsione	TEd	TRd	Riduzione taglio resistente	Sfruttamento taglio-torsione	τEd,totale	τRd	Verifica
227.6	SLD 9	0.004	59.2	14125.9	Considerata				Si

Verifica a presso/tenso flessione retta X §§ 4.2.4.1.2.3 - 4.2.4.1.2.6 - 4.2.4.1.2.7 - 4.2.4.1.2.8 NTC18

Verifiche eseguite utilizzando la formula conservativa (6.2) §6.2.1 EN 1993-1-1:2005.

X	Comb.	Sfruttamento	Classe	NEd	NRd	Rid. NRd da VEd	Mx,Ed	Mx,Rd	Rid. Mx,Rd da VEd	Rid. Mx,Rd da NEd	ρx	ρy	Verifica
98.6	SLU 98	0.062	1	-3512.3	84315.5	1	12395	596667	1		0	0	Si

Verifica a presso/tenso flessione retta X SLD §§ 4.2.4.1.2.3 - 4.2.4.1.2.6 - 4.2.4.1.2.7 - 4.2.4.1.2.8 NTC18

Verifiche eseguite utilizzando la formula conservativa (6.2) §6.2.1 EN 1993-1-1:2005.

X	Comb.	Sfruttamento	Classe	NEd	NRd	Rid. NRd da VEd	Mx,Ed	Mx,Rd	Rid. Mx,Rd da VEd	Rid. Mx,Rd da NEd	ρx	ρy	Verifica
113.8	SLD 6	0.03	1	-2339.1	84315.5	1	1470	596667	1		0	0	Si

Verifiche ad instabilità

Caratteristiche iniziali

Membratura principale per controllo snellezza; Calcolo di snellezze ed N critici condotti secondo gli assi principali;
Curva X: c; Curva Y: c;
Svergolamento: Nessuno; la verifica a instabilità flesso-torsionale (svergolamento) non verrà eseguita.

Dati per instabilità attorno a x

Numero rit.	Presente	Ascissa	Campata	βx/m	Vincolo a entrambi estremi	λx/m	λVer
1	Si	0					
			1-2	1	Si	29.5	Si, (<200)
2	Si	227.6					

Dati per instabilità attorno a y

Numero rit.	Presente	Ascissa	Campata	βy/n	k,LT	kw,LT	Vincolo a entrambi estremi
1	Si	0					
			1-2	1	Si	106.3	Si, (<200)
2	Si	227.6					

Verifica di stabilità per pressoflessione §C.4.2.4.1.3.3.1 NTC18

X	Comb.	Sfruttamento	Classe	NEd	MxEq,Ed	MyEq,Ed	Area	Wx	Wy	χ,min	λ adim. x/m	λ adim. y/n	N,crit x/m	N,crit y/n	Verifica
0	SLU 131	0.12	1	-3622.5	10831	0	32.19	227.8	51.9	0.422	0.34	1.224	764699.9	59081.4	Si

Verifica di stabilità per pressoflessione SLD §C.4.2.4.1.3.3.1 NTC18

X	Comb.	Sfruttamento	Classe	NEd	MxEq,Ed	MyEq,Ed	Area	Wx	Wy	χ,min	λ adim. x/m	λ adim. y/n	N,crit x/m	N,crit y/n	Verifica
0	SLD 5	0.068	1	-2351.7	1273	0	32.19	227.8	51.9	0.422	0.34	1.224	764699.9	59081.4	Si

Verifica di stabilità a taglio anima Y §4.2.4.1.2.4 [4.2.27] NTC18

η	hw	tw	hw/tw max	Verifica
1.2	17.2	0.9	55.46	Si

Verifica di stabilità a taglio anima Y SLD §4.2.4.1.2.4 [4.2.27] NTC18

η	hw	tw	hw/tw max	Verifica
1.2	17.2	0.9	55.46	Si

Verifiche a deformabilità

Mensola X: No; Mensola Y: No.

Frecce lungo X

Ascissa freccia	Combinazione	Freccia	Luce	L/f	L/f,min	Tipo	Verifica
166.9	SLE RA 1	0	227.6	10000	250	Totale	Si
166.9	SLE RA 31	0	227.6	10000	250	Totale	Si
166.9	SLE RA 30	0	227.6	10000	250	Totale	Si
166.9	SLE RA 29	0	227.6	10000	250	Totale	Si
166.9	SLE RA 28	0	227.6	10000	250	Totale	Si
174.5	SLE RA 2	0	227.6	10000	350	Variabile	Si
182.1	SLE RA 31	0	227.6	10000	350	Variabile	Si
182.1	SLE RA 30	0	227.6	10000	350	Variabile	Si
182.1	SLE RA 29	0	227.6	10000	350	Variabile	Si
182.1	SLE RA 28	0	227.6	10000	350	Variabile	Si

Frecce lungo Y

Ascissa freccia	Combinazione	Freccia	Luce	L/f	L/f,min	Tipo	Verifica
113.8	SLE RA 1	0.002	227.6	10000	250	Totale	Si
113.8	SLE RA 31	0.012	227.6	10000	250	Totale	Si
113.8	SLE RA 30	0.012	227.6	10000	250	Totale	Si
113.8	SLE RA 29	0.01	227.6	10000	250	Totale	Si
113.8	SLE RA 28	0.01	227.6	10000	250	Totale	Si
182.1	SLE RA 2	0	227.6	10000	350	Variabile	Si
113.8	SLE RA 31	0.01	227.6	10000	350	Variabile	Si
113.8	SLE RA 30	0.01	227.6	10000	350	Variabile	Si
113.8	SLE RA 29	0.008	227.6	10000	350	Variabile	Si
113.8	SLE RA 28	0.008	227.6	10000	350	Variabile	Si

Superelemento in acciaio composto dall'asta 263

Caratteristiche del materiale

Acciaio: S275, fyk = 2750

Caratteristiche geometriche

Lunghezza: 227.6
Nodo iniziale: 21 Nodo finale: 60
Cerniera iniziale: Svincolo: M2, M3 Cerniera finale: Svincolo: M2, M3
Sovraresistenza: 0% Sisma Z: No

Caratteristiche della sezione

Sezione	Rotazione	Area	Jx	Jy	ix	iy	Wx	Wy	Wplx	Wply
UPN200	0	32.19	1911.41	147.68	7.71	2.14	191.14	26.92	227.82	51.87

Verifiche di resistenza

Verifiche a forza assiale §4.2.4.1.2.1 - §4.2.4.1.2.2 NTC18

X	Comb.	Sfruttamento	Classe	NEd	Nc,Rd	Nt,Rd	Riduzione da taglio	ρx	ρy	Verifica
0	SLU 99	0.048	1	-4068.3	84315.5		1	0	0	Si

Verifiche a forza assiale SLD §4.2.4.1.2.1 - §4.2.4.1.2.2 NTC18

X	Comb.	Sfruttamento	Classe	NEd	Nc,Rd	Nt,Rd	Riduzione da taglio	ρx	ρy	Verifica
0	SLD 8	0.032	1	-2661.4	84315.5		1	0	0	Si

Verifica a taglio Y §4.2.4.1.2.4 NTC18

X	Comb.	Sfruttamento	VEd	Vc,Rd	Av	Interazione taglio-torsione	Riduzione torsione	Verifica
0	SLU 96	0.009	238.3	26073.6	17.24	Considerata	1	Si

Verifica a taglio Y SLD §4.2.4.1.2.4 NTC18

X	Comb.	Sfruttamento	VEd	Vc,Rd	Av	Interazione taglio-torsione	Riduzione torsione	Verifica
227.6	SLD 8	0.001	-25.8	26039.5	17.24	Considerata	1	Si

Verifica a torsione §4.2.4.1.2.5 NTC18

X	Comb.	Sfruttamento torsione	TEd	TRd	Riduzione taglio resistente	Sfruttamento taglio-torsione	τEd,totale	τRd	Verifica
227.6	SLV 8	0.008	-110.8	14125.9	Considerata				Si

Verifica a torsione SLD §4.2.4.1.2.5 NTC18

X	Comb.	Sfruttamento torsione	TEd	TRd	Riduzione taglio resistente	Sfruttamento taglio-torsione	τEd,totale	τRd	Verifica
227.6	SLD 8	0.003	-46	14125.9	Considerata				Si

Verifica a presso/tenso flessione retta X §§ 4.2.4.1.2.3 - 4.2.4.1.2.6 - 4.2.4.1.2.7 - 4.2.4.1.2.8 NTC18

Verifiche eseguite utilizzando la formula conservativa (6.2) §6.2.1 EN 1993-1-1:2005.

X	Comb.	Sfruttamento	Classe	NEd	NRd	Rid. NRd da VEd	Mx,Ed	Mx,Rd	Rid. Mx,Rd da VEd	Rid. Mx,Rd da NEd	ρx	ρy	Verifica
98.6	SLU 132	0.068	1	-3958	84315.5	1	-12395	596667	1		0	0	Si

Verifica a presso/tenso flessione retta X SLD §§ 4.2.4.1.2.3 - 4.2.4.1.2.6 - 4.2.4.1.2.7 - 4.2.4.1.2.8 NTC18

Verifiche eseguite utilizzando la formula conservativa (6.2) §6.2.1 EN 1993-1-1:2005.

X	Comb.	Sfruttamento	Classe	NEd	NRd	Rid. NRd da VEd	Mx,Ed	Mx,Rd	Rid. Mx,Rd da VEd	Rid. Mx,Rd da NEd	ρx	ρy	Verifica
113.8	SLD 8	0.034	1	-2648.7	84315.5	1	-1470	596667	1		0	0	Si

Verifiche ad instabilità

Caratteristiche iniziali

Membratura principale per controllo snellezza; Calcolo di snellezze ed N critici condotti secondo gli assi principali;
Curva X: c; Curva Y: c;
Svergolamento: Nessuno; la verifica a instabilità flesso-torsionale (svergolamento) non verrà eseguita.

Dati per instabilità attorno a x

Numero rit.	Presente	Ascissa	Campata	βx/m	Vincolo a entrambi estremi	λx/m	λVer
1	Si	0					
			1-2	1	Si	29.5	Si, (<200)
2	Si	227.6					

Dati per instabilità attorno a y

Numero rit.	Presente	Ascissa	Campata	βy/n	k,LT	kw,LT	Vincolo a entrambi estremi
1	Si	0					
			1-2	1	Si	106.3	Si, (<200)
2	Si	227.6					

Verifica di stabilità per pressoflessione §C.4.2.4.1.3.3.1 NTC18

X	Comb.	Sfruttamento	Classe	NEd	MxEq,Ed	MyEq,Ed	Area	Wx	Wy	χ,min	λ adim. x/m	λ adim. y/n	N,crit x/m	N,crit y/n	Verifica
0	SLU 99	0.132	1	-4068.3	-10831	0	32.19	227.8	51.9	0.422	0.34	1.224	764699.9	59081.4	Si

Verifica di stabilità per pressoflessione SLD §C.4.2.4.1.3.3.1 NTC18

X	Comb.	Sfruttamento	Classe	NEd	MxEq,Ed	MyEq,Ed	Area	Wx	Wy	χ,min	λ adim. x/m	λ adim. y/n	N,crit x/m	N,crit y/n	Verifica
0	SLD 8	0.077	1	-2661.4	-1273	0	32.19	227.8	51.9	0.422	0.34	1.224	764699.9	59081.4	Si

Verifica di stabilità a taglio anima Y §4.2.4.1.2.4 [4.2.27] NTC18

η	hw	tw	hw/tw max	Verifica
1.2	17.2	0.9	55.46	Si

Verifica di stabilità a taglio anima Y SLD §4.2.4.1.2.4 [4.2.27] NTC18

η	hw	tw	hw/tw max	Verifica
1.2	17.2	0.9	55.46	Si

Verifiche a deformabilità

Mensola X: No; Mensola Y: No.

Frecce lungo X

Ascissa freccia	Combinazione	Freccia	Luce	L/f	L/f,min	Tipo	Verifica
220	SLE RA 1	0	227.6	10000	250	Totale	Si
220	SLE RA 31	0	227.6	10000	250	Totale	Si
220	SLE RA 30	0	227.6	10000	250	Totale	Si
220	SLE RA 29	0	227.6	10000	250	Totale	Si
220	SLE RA 28	0	227.6	10000	250	Totale	Si
182.1	SLE RA 2	0	227.6	10000	350	Variabile	Si
182.1	SLE RA 31	0	227.6	10000	350	Variabile	Si
182.1	SLE RA 30	0	227.6	10000	350	Variabile	Si
189.7	SLE RA 29	0	227.6	10000	350	Variabile	Si
189.7	SLE RA 28	0	227.6	10000	350	Variabile	Si

Frecce lungo Y

Ascissa freccia	Combinazione	Freccia	Luce	L/f	L/f,min	Tipo	Verifica
113.8	SLE RA 1	-0.002	227.6	10000	250	Totale	Si
113.8	SLE RA 31	-0.012	227.6	10000	250	Totale	Si
113.8	SLE RA 30	-0.012	227.6	10000	250	Totale	Si
113.8	SLE RA 29	-0.01	227.6	10000	250	Totale	Si
113.8	SLE RA 28	-0.01	227.6	10000	250	Totale	Si
151.7	SLE RA 2	0	227.6	10000	350	Variabile	Si
113.8	SLE RA 31	-0.01	227.6	10000	350	Variabile	Si
113.8	SLE RA 30	-0.01	227.6	10000	350	Variabile	Si
113.8	SLE RA 29	-0.008	227.6	10000	350	Variabile	Si
113.8	SLE RA 28	-0.008	227.6	10000	350	Variabile	Si

Superelemento in acciaio composto dall'asta 264

Caratteristiche del materiale

Acciaio: S275, fyk = 2750

Caratteristiche geometriche

Lunghezza: 227.6
Nodo iniziale: 19 Nodo finale: 64
Cerniera iniziale: Svincolo: M2, M3 Cerniera finale: Svincolo: M2, M3
Sovraresistenza: 0% Sisma Z: No

Caratteristiche della sezione

Sezione	Rotazione	Area	Jx	Jy	ix	iy	Wx	Wy	Wplx	Wply
UPN200	180	32.19	1911.41	147.68	7.71	2.14	191.14	26.92	227.82	51.87

Verifiche di resistenza

Verifiche a forza assiale §4.2.4.1.2.1 - §4.2.4.1.2.2 NTC18

X	Comb.	Sfruttamento	Classe	NEd	Nc,Rd	Nt,Rd	Riduzione da taglio	ρx	ρy	Verifica
0	SLU 131	0.038	1	-3224.6	84315.5		1	0	0	Si

Verifiche a forza assiale SLD §4.2.4.1.2.1 - §4.2.4.1.2.2 NTC18

X	Comb.	Sfruttamento	Classe	NEd	Nc,Rd	Nt,Rd	Riduzione da taglio	ρx	ρy	Verifica
0	SLD 5	0.025	1	-2068.6	84315.5		1	0	0	Si

Verifica a taglio Y §4.2.4.1.2.4 NTC18

X	Comb.	Sfruttamento	VEd	Vc,Rd	Av	Interazione taglio-torsione	Riduzione torsione	Verifica
0	SLU 97	0.009	-239.4	26073.6	17.24	Considerata	1	Si

Verifica a taglio Y SLD §4.2.4.1.2.4 NTC18

X	Comb.	Sfruttamento	VEd	Vc,Rd	Av	Interazione taglio-torsione	Riduzione torsione	Verifica
227.6	SLD 5	0.001	25.8	26039.5	17.24	Considerata	1	Si

Verifica a torsione §4.2.4.1.2.5 NTC18

X	Comb.	Sfruttamento torsione	TEd	TRd	Riduzione taglio resistente	Sfruttamento taglio-torsione	τEd,totale	τRd	Verifica
121.4	SLV 5	0.008	111.5	14125.9	Considerata				Si

Verifica a torsione SLD §4.2.4.1.2.5 NTC18

X	Comb.	Sfruttamento torsione	TEd	TRd	Riduzione taglio resistente	Sfruttamento taglio-torsione	τEd,totale	τRd	Verifica
227.6	SLD 6	0.003	46.1	14125.9	Considerata				Si

Verifica a presso/tenso flessione retta X §§ 4.2.4.1.2.3 - 4.2.4.1.2.6 - 4.2.4.1.2.7 - 4.2.4.1.2.8 NTC18

Verifiche eseguite utilizzando la formula conservativa (6.2) §6.2.1 EN 1993-1-1:2005.

X	Comb.	Sfruttamento	Classe	NEd	NRd	Rid. NRd da VEd	Mx,Ed	Mx,Rd	Rid. Mx,Rd da VEd	Rid. Mx,Rd da NEd	ρx	ρy	Verifica
98.6	SLU 131	0.058	1	-3114.3	84315.5	1	12507	596667	1		0	0	Si

Verifica a presso/tenso flessione retta X SLD §§ 4.2.4.1.2.3 - 4.2.4.1.2.6 - 4.2.4.1.2.7 - 4.2.4.1.2.8 NTC18

Verifiche eseguite utilizzando la formula conservativa (6.2) §6.2.1 EN 1993-1-1:2005.

X	Comb.	Sfruttamento	Classe	NEd	NRd	Rid. NRd da VEd	Mx,Ed	Mx,Rd	Rid. Mx,Rd da VEd	Rid. Mx,Rd da NEd	ρx	ρy	Verifica
113.8	SLD 6	0.027	1	-2055.9	84315.5	1	1470	596667	1		0	0	Si

Verifiche ad instabilità

Caratteristiche iniziali

Membratura principale per controllo snellezza; Calcolo di snellezze ed N critici condotti secondo gli assi principali;
Curva X: c; Curva Y: c;
Svergolamento: Nessuno; la verifica a instabilità flesso-torsionale (svergolamento) non verrà eseguita.

Dati per instabilità attorno a x

Numero rit.	Presente	Ascissa	Campata	βx/m	Vincolo a entrambi estremi	λx/m	λVer
1	Si	0					
			1-2	1	Si	29.5	Si, (<200)
2	Si	227.6					

Dati per instabilità attorno a y

Numero rit.	Presente	Ascissa	Campata	βy/n	k,LT	kw,LT	Vincolo a entrambi estremi
1	Si	0					
			1-2	1	Si	106.3	Si, (<200)
2	Si	227.6					

Verifica di stabilità per pressoflessione §C.4.2.4.1.3.3.1 NTC18

X	Comb.	Sfruttamento	Classe	NEd	MxEq,Ed	MyEq,Ed	Area	Wx	Wy	χ,min	λ adim. x/m	λ adim. y/n	N,crit x/m	N,crit y/n	Verifica
0	SLU 98	0.109	1	-3224.6	10988	0	32.19	227.8	51.9	0.422	0.34	1.224	764699.9	59081.4	Si

Verifica di stabilità per pressoflessione SLD §C.4.2.4.1.3.3.1 NTC18

X	Comb.	Sfruttamento	Classe	NEd	MxEq,Ed	MyEq,Ed	Area	Wx	Wy	χ,min	λ adim. x/m	λ adim. y/n	N,crit x/m	N,crit y/n	Verifica
0	SLD 5	0.06	1	-2068.6	1273	0	32.19	227.8	51.9	0.422	0.34	1.224	764699.9	59081.4	Si

Verifica di stabilità a taglio anima Y §4.2.4.1.2.4 [4.2.27] NTC18

η	hw	tw	hw/tw max	Verifica
1.2	17.2	0.9	55.46	Si

Verifica di stabilità a taglio anima Y SLD §4.2.4.1.2.4 [4.2.27] NTC18

η	hw	tw	hw/tw max	Verifica
1.2	17.2	0.9	55.46	Si

Verifiche a deformabilità

Mensola X: No; Mensola Y: No.

Frecce lungo X

Ascissa freccia	Combinazione	Freccia	Luce	L/f	L/f,min	Tipo	Verifica
212.4	SLE RA 1	0	227.6	10000	250	Totale	Si
212.4	SLE RA 31	0	227.6	10000	250	Totale	Si
212.4	SLE RA 30	0	227.6	10000	250	Totale	Si
212.4	SLE RA 29	0	227.6	10000	250	Totale	Si
212.4	SLE RA 28	0	227.6	10000	250	Totale	Si
212.4	SLE RA 2	0	227.6	10000	350	Variabile	Si
204.8	SLE RA 31	0	227.6	10000	350	Variabile	Si
204.8	SLE RA 30	0	227.6	10000	350	Variabile	Si
204.8	SLE RA 29	0	227.6	10000	350	Variabile	Si
204.8	SLE RA 28	0	227.6	10000	350	Variabile	Si

Frecce lungo Y

Ascissa freccia	Combinazione	Freccia	Luce	L/f	L/f,min	Tipo	Verifica
113.8	SLE RA 1	0.002	227.6	10000	250	Totale	Si
113.8	SLE RA 31	0.012	227.6	10000	250	Totale	Si
113.8	SLE RA 30	0.012	227.6	10000	250	Totale	Si
113.8	SLE RA 29	0.01	227.6	10000	250	Totale	Si
113.8	SLE RA 28	0.01	227.6	10000	250	Totale	Si
136.6	SLE RA 2	0	227.6	10000	350	Variabile	Si
113.8	SLE RA 31	0.01	227.6	10000	350	Variabile	Si
113.8	SLE RA 30	0.01	227.6	10000	350	Variabile	Si
113.8	SLE RA 29	0.008	227.6	10000	350	Variabile	Si
113.8	SLE RA 28	0.008	227.6	10000	350	Variabile	Si

Superelemento in acciaio composto dall'asta 265

Caratteristiche del materiale

Acciaio: S275, fyk = 2750

Caratteristiche geometriche

Lunghezza: 227.6

Nodo iniziale: 23 Nodo finale: 64
Cerniera iniziale: Svincolo: M2, M3 Cerniera finale: Svincolo: M2, M3
Sovraresistenza: 0% Sisma Z: No

Caratteristiche della sezione

Sezione	Rotazione	Area	Jx	Jy	ix	iy	Wx	Wy	Wplx	Wply
UPN200	0	32.19	1911.41	147.68	7.71	2.14	191.14	26.92	227.82	51.87

Verifiche di resistenza

Verifiche a forza assiale §4.2.4.1.2.1 - §4.2.4.1.2.2 NTC18

X	Comb.	Sfruttamento	Classe	NEd	Nc,Rd	Nt,Rd	Riduzione da taglio	ρx	ρy	Verifica
0	SLU 99	0.053	1	-4479.6	84315.5		1	0	0	Si

Verifiche a forza assiale SLD §4.2.4.1.2.1 - §4.2.4.1.2.2 NTC18

X	Comb.	Sfruttamento	Classe	NEd	Nc,Rd	Nt,Rd	Riduzione da taglio	ρx	ρy	Verifica
0	SLD 8	0.035	1	-2939.1	84315.5		1	0	0	Si

Verifica a taglio Y §4.2.4.1.2.4 NTC18

X	Comb.	Sfruttamento	VEd	Vc,Rd	Av	Interazione taglio-torsione	Riduzione torsione	Verifica
0	SLU 98	0.009	239.4	26065.9	17.24	Considerata	1	Si

Verifica a taglio Y SLD §4.2.4.1.2.4 NTC18

X	Comb.	Sfruttamento	VEd	Vc,Rd	Av	Interazione taglio-torsione	Riduzione torsione	Verifica
227.6	SLD 8	0.001	-25.8	26036.7	17.24	Considerata	1	Si

Verifica a torsione §4.2.4.1.2.5 NTC18

X	Comb.	Sfruttamento torsione	TEd	TRd	Riduzione taglio resistente	Sfruttamento taglio-torsione	τEd,totale	τRd	Verifica
0	SLV 7	0.008	-119.6	14125.9	Considerata				Si

Verifica a torsione SLD §4.2.4.1.2.5 NTC18

X	Comb.	Sfruttamento torsione	TEd	TRd	Riduzione taglio resistente	Sfruttamento taglio-torsione	τEd,totale	τRd	Verifica
227.6	SLD 8	0.004	-49.9	14125.9	Considerata				Si

Verifica a presso/tenso flessione retta X §§ 4.2.4.1.2.3 - 4.2.4.1.2.6 - 4.2.4.1.2.7 - 4.2.4.1.2.8 NTC18

Verifiche eseguite utilizzando la formula conservativa (6.2) §6.2.1 EN 1993-1-1:2005.

X	Comb.	Sfruttamento	Classe	NEd	NRd	Rid. NRd da VEd	Mx,Ed	Mx,Rd	Rid. Mx,Rd da VEd	Rid. Mx,Rd da NEd	ρx	ρy	Verifica
98.6	SLU 99	0.073	1	-4369.3	84315.5	1	-12507	596667	1		0	0	Si

Verifica a presso/tenso flessione retta X SLD §§ 4.2.4.1.2.3 - 4.2.4.1.2.6 - 4.2.4.1.2.7 - 4.2.4.1.2.8 NTC18

Verifiche eseguite utilizzando la formula conservativa (6.2) §6.2.1 EN 1993-1-1:2005.

X	Comb.	Sfruttamento	Classe	NEd	NRd	Rid. NRd da VEd	Mx,Ed	Mx,Rd	Rid. Mx,Rd da VEd	Rid. Mx,Rd da NEd	ρx	ρy	Verifica
113.8	SLD 8	0.037	1	-2926.5	84315.5	1	-1470	596667	1		0	0	Si

Verifiche ad instabilità

Caratteristiche iniziali

Membratura principale per controllo snellezza; Calcolo di snellezze ed N critici condotti secondo gli assi principali;
Curva X: c; Curva Y: c;
Svergolamento: Nessuno; la verifica a instabilità flesso-torsionale (svergolamento) non verrà eseguita.

Dati per instabilità attorno a x

Numero rit.	Presente	Ascissa	Campata	βx/m	Vincolo a entrambi estremi	λx/m	λVer
1	Si	0					
			1-2	1	Si	29.5	Si, (<200)
2	Si	227.6					

Dati per instabilità attorno a y

Numero rit.	Presente	Ascissa	Campata	βy/n	k,LT	kw,LT	Vincolo a entrambi estremi
1	Si	0					
			1-2	1	Si	106.3	Si, (<200)
2	Si	227.6					

Verifica di stabilità per pressoflessione §C.4.2.4.1.3.3.1 NTC18

X	Comb.	Sfruttamento	Classe	NEd	MxEq,Ed	MyEq,Ed	Area	Wx	Wy	χ,min	λ adim. x/m	λ adim. y/n	N,crit x/m	N,crit y/n	Verifica
0	SLU 99	0.144	1	-4479.6	-10988	0	32.19	227.8	51.9	0.422	0.34	1.224	764699.9	59081.4	Si

Verifica di stabilità per pressoflessione SLD §C.4.2.4.1.3.3.1 NTC18

X	Comb.	Sfruttamento	Classe	NEd	MxEq,Ed	MyEq,Ed	Area	Wx	Wy	χ,min	λ adim. x/m	λ adim. y/n	N,crit x/m	N,crit y/n	Verifica
0	SLD 8	0.085	1	-2939.1	-1273	0	32.19	227.8	51.9	0.422	0.34	1.224	764699.9	59081.4	Si

Verifica di stabilità a taglio anima Y §4.2.4.1.2.4 [4.2.27] NTC18

η	hw	tw	hw/tw max	Verifica
1.2	17.2	0.9	55.46	Si

Verifica di stabilità a taglio anima Y SLD §4.2.4.1.2.4 [4.2.27] NTC18

η	hw	tw	hw/tw max	Verifica
1.2	17.2	0.9	55.46	Si

Verifiche a deformabilità

Mensola X: No; Mensola Y: No.

Frecce lungo X

Ascissa freccia	Combinazione	Freccia	Luce	L/f	L/f,min	Tipo	Verifica
212.4	SLE RA 1	0	227.6	10000	250	Totale	Si
212.4	SLE RA 31	0	227.6	10000	250	Totale	Si
212.4	SLE RA 30	0	227.6	10000	250	Totale	Si
212.4	SLE RA 29	0	227.6	10000	250	Totale	Si
212.4	SLE RA 28	0	227.6	10000	250	Totale	Si
220	SLE RA 2	0	227.6	10000	350	Variabile	Si
220	SLE RA 31	0	227.6	10000	350	Variabile	Si
220	SLE RA 30	0	227.6	10000	350	Variabile	Si
220	SLE RA 29	0	227.6	10000	350	Variabile	Si
220	SLE RA 28	0	227.6	10000	350	Variabile	Si

Frecce lungo Y

Ascissa freccia	Combinazione	Freccia	Luce	L/f	L/f,min	Tipo	Verifica
113.8	SLE RA 1	-0.002	227.6	10000	250	Totale	Si
113.8	SLE RA 31	-0.012	227.6	10000	250	Totale	Si
113.8	SLE RA 30	-0.012	227.6	10000	250	Totale	Si
113.8	SLE RA 29	-0.01	227.6	10000	250	Totale	Si
113.8	SLE RA 28	-0.01	227.6	10000	250	Totale	Si
212.4	SLE RA 2	0	227.6	10000	350	Variabile	Si
113.8	SLE RA 31	-0.01	227.6	10000	350	Variabile	Si
113.8	SLE RA 30	-0.01	227.6	10000	350	Variabile	Si
113.8	SLE RA 29	-0.008	227.6	10000	350	Variabile	Si
113.8	SLE RA 28	-0.008	227.6	10000	350	Variabile	Si

Superelemento in acciaio composto dall'asta 266

Caratteristiche del materiale

Acciaio: S275, fyk = 2750

Caratteristiche geometriche

Lunghezza: 227.6
Nodo iniziale: 21 Nodo finale: 68
Cerniera iniziale: Svincolo: M2, M3 Cerniera finale: Svincolo: M2, M3
Sovraresistenza: 0% Sisma Z: No

Caratteristiche della sezione

Sezione	Rotazione	Area	Jx	Jy	ix	iy	Wx	Wy	Wplx	Wply
UPN200	180	32.19	1911.41	147.68	7.71	2.14	191.14	26.92	227.82	51.87

Verifiche di resistenza

Verifiche a forza assiale §4.2.4.1.2.1 - §4.2.4.1.2.2 NTC18

X	Comb.	Sfruttamento	Classe	NEd	Nc,Rd	Nt,Rd	Riduzione da taglio	ρx	ρy	Verifica
0	SLU 131	0.025	1	-2103.2	84315.5		1	0	0	Si

Verifiche a forza assiale SLD §4.2.4.1.2.1 - §4.2.4.1.2.2 NTC18

X	Comb.	Sfruttamento	Classe	NEd	Nc,Rd	Nt,Rd	Riduzione da taglio	ρx	ρy	Verifica
0	SLD 5	0.018	1	-1545.5	84315.5		1	0	0	Si

Verifica a taglio Y §4.2.4.1.2.4 NTC18

X	Comb.	Sfruttamento	VEd	Vc,Rd	Av	Interazione taglio-torsione	Riduzione torsione	Verifica
0	SLU 97	0.009	-238.3	26073.6	17.24	Considerata	1	Si

Verifica a taglio Y SLD §4.2.4.1.2.4 NTC18

X	Comb.	Sfruttamento	VEd	Vc,Rd	Av	Interazione taglio-torsione	Riduzione torsione	Verifica
227.6	SLD 5	0.001	25.8	26038.1	17.24	Considerata	1	Si

Verifica a torsione §4.2.4.1.2.5 NTC18

X	Comb.	Sfruttamento torsione	TEd	TRd	Riduzione taglio resistente	Sfruttamento taglio-torsione	τEd,totale	τRd	Verifica
220	SLV 6	0.008	112.8	14125.9	Considerata				Si

Verifica a torsione SLD §4.2.4.1.2.5 NTC18

X	Comb.	Sfruttamento torsione	TEd	TRd	Riduzione taglio resistente	Sfruttamento taglio-torsione	τEd,totale	τRd	Verifica
227.6	SLD 6	0.003	48	14125.9	Considerata				Si

Verifica a presso/tenso flessione retta X §§ 4.2.4.1.2.3 - 4.2.4.1.2.6 - 4.2.4.1.2.7 - 4.2.4.1.2.8 NTC18

Verifiche eseguite utilizzando la formula conservativa (6.2) §6.2.1 EN 1993-1-1:2005.

X	Comb.	Sfruttamento	Classe	NEd	NRd	Rid. NRd da VEd	Mx,Ed	Mx,Rd	Rid. Mx,Rd da VEd	Rid. Mx,Rd da NEd	ρx	ρy	Verifica
98.6	SLU 98	0.044	1	-1992.9	84315.5	1	12395	596667	1		0	0	Si

Verifica a presso/tenso flessione retta X SLD §§ 4.2.4.1.2.3 - 4.2.4.1.2.6 - 4.2.4.1.2.7 - 4.2.4.1.2.8 NTC18

Verifiche eseguite utilizzando la formula conservativa (6.2) §6.2.1 EN 1993-1-1:2005.

X	Comb.	Sfruttamento	Classe	NEd	NRd	Rid. NRd da VEd	Mx,Ed	Mx,Rd	Rid. Mx,Rd da VEd	Rid. Mx,Rd da NEd	ρx	ρy	Verifica
113.8	SLD 5	0.021	1	-1532.8	84315.5	1	1470	596667	1		0	0	Si

Verifiche ad instabilità

Caratteristiche iniziali

Membratura principale per controllo snellezza; Calcolo di snellezze ed N critici condotti secondo gli assi principali;
Curva X: c; Curva Y: c;
Svergolamento: Nessuno; la verifica a instabilità flesso-torsionale (svergolamento) non verrà eseguita.

Dati per instabilità attorno a x

Numero rit.	Presente	Ascissa	Campata	βx/m	Vincolo a entrambi estremi	λx/m	λVer
1	Si	0					
			1-2	1	Si	29.5	Si, (<200)
2	Si	227.6					

Dati per instabilità attorno a y

Numero rit.	Presente	Ascissa	Campata	βy/n	k,LT	kw,LT	Vincolo a entrambi estremi
1	Si	0					
			1-2	1	Si	106.3	Si, (<200)
2	Si	227.6					

Verifica di stabilità per pressoflessione §C.4.2.4.1.3.3.1 NTC18

X	Comb.	Sfruttamento	Classe	NEd	MxEq,Ed	MyEq,Ed	Area	Wx	Wy	χ,min	λ adim. x/m	λ adim. y/n	N,crit x/m	N,crit y/n	Verifica
0	SLU 98	0.077	1	-2103.2	10831	0	32.19	227.8	51.9	0.422	0.34	1.224	764699.9	59081.4	Si

Verifica di stabilità per pressoflessione SLD §C.4.2.4.1.3.3.1 NTC18

X	Comb.	Sfruttamento	Classe	NEd	MxEq,Ed	MyEq,Ed	Area	Wx	Wy	χ,min	λ adim. x/m	λ adim. y/n	N,crit x/m	N,crit y/n	Verifica
0	SLD 5	0.046	1	-1545.5	1273	0	32.19	227.8	51.9	0.422	0.34	1.224	764699.9	59081.4	Si

Verifica di stabilità a taglio anima Y §4.2.4.1.2.4 [4.2.27] NTC18

η	hw	tw	hw/tw max	Verifica
1.2	17.2	0.9	55.46	Si

Verifica di stabilità a taglio anima Y SLD §4.2.4.1.2.4 [4.2.27] NTC18

η	hw	tw	hw/tw max	Verifica
1.2	17.2	0.9	55.46	Si

Verifiche a deformabilità

Mensola X: No; Mensola Y: No.

Frecce lungo X

Ascissa freccia	Combinazione	Freccia	Luce	L/f	L/f,min	Tipo	Verifica
212.4	SLE RA 1	0	227.6	10000	250	Totale	Si
189.7	SLE RA 31	0	227.6	10000	250	Totale	Si
212.4	SLE RA 30	0	227.6	10000	250	Totale	Si
212.4	SLE RA 29	0	227.6	10000	250	Totale	Si
212.4	SLE RA 28	0	227.6	10000	250	Totale	Si
220	SLE RA 2	0	227.6	10000	350	Variabile	Si
182.1	SLE RA 31	0	227.6	10000	350	Variabile	Si
182.1	SLE RA 30	0	227.6	10000	350	Variabile	Si
182.1	SLE RA 29	0	227.6	10000	350	Variabile	Si
182.1	SLE RA 28	0	227.6	10000	350	Variabile	Si

Frecce lungo Y

Ascissa freccia	Combinazione	Freccia	Luce	L/f	L/f,min	Tipo	Verifica
113.8	SLE RA 1	0.002	227.6	10000	250	Totale	Si
113.8	SLE RA 31	0.012	227.6	10000	250	Totale	Si
113.8	SLE RA 30	0.012	227.6	10000	250	Totale	Si
113.8	SLE RA 29	0.01	227.6	10000	250	Totale	Si
113.8	SLE RA 28	0.01	227.6	10000	250	Totale	Si
129	SLE RA 2	0	227.6	10000	350	Variabile	Si
113.8	SLE RA 31	0.01	227.6	10000	350	Variabile	Si
113.8	SLE RA 30	0.01	227.6	10000	350	Variabile	Si
113.8	SLE RA 29	0.008	227.6	10000	350	Variabile	Si
113.8	SLE RA 28	0.008	227.6	10000	350	Variabile	Si

Superelemento in acciaio composto dall'asta 267

Caratteristiche del materiale

Acciaio: S275, fyk = 2750

Caratteristiche geometriche

Lunghezza: 227.6
Nodo iniziale: 22 Nodo finale: 61
Cerniera iniziale: Svincolo: M2, M3 Cerniera finale: Svincolo: M2, M3
Sovraresistenza: 0% Sisma Z: No

Caratteristiche della sezione

Sezione	Rotazione	Area	Jx	Jy	ix	iy	Wx	Wy	Wplx	Wply
UPN200	180	32.19	1911.41	147.68	7.71	2.14	191.14	26.92	227.82	51.87

Verifiche di resistenza

Verifiche a forza assiale §4.2.4.1.2.1 - §4.2.4.1.2.2 NTC18

X	Comb.	Sfruttamento	Classe	NEd	Nc,Rd	Nt,Rd	Riduzione da taglio	ρx	ρy	Verifica
0	SLU 99	0.053	1	-4482.5	84315.5		1	0	0	Si

Verifiche a forza assiale SLD §4.2.4.1.2.1 - §4.2.4.1.2.2 NTC18

X	Comb.	Sfruttamento	Classe	NEd	Nc,Rd	Nt,Rd	Riduzione da taglio	ρx	ρy	Verifica
0	SLD 11	0.035	1	-2939.1	84315.5		1	0	0	Si

Verifica a taglio Y §4.2.4.1.2.4 NTC18

X	Comb.	Sfruttamento	VEd	Vc,Rd	Av	Interazione taglio-torsione	Riduzione torsione	Verifica
0	SLU 131	0.009	-239.4	26065.9	17.24	Considerata	1	Si

Verifica a taglio Y SLD §4.2.4.1.2.4 NTC18

X	Comb.	Sfruttamento	VEd	Vc,Rd	Av	Interazione taglio-torsione	Riduzione torsione	Verifica
227.6	SLD 12	0.001	25.8	26036.7	17.24	Considerata	1	Si

Verifica a torsione §4.2.4.1.2.5 NTC18

X	Comb.	Sfruttamento torsione	TEd	TRd	Riduzione taglio resistente	Sfruttamento taglio-torsione	τEd,totale	τRd	Verifica
227.6	SLV 12	0.008	119.6	14125.9	Considerata				Si

Verifica a torsione SLD §4.2.4.1.2.5 NTC18

X	Comb.	Sfruttamento torsione	TEd	TRd	Riduzione taglio resistente	Sfruttamento taglio-torsione	τEd,totale	τRd	Verifica
212.4	SLD 12	0.004	49.9	14125.9	Considerata				Si

Verifica a presso/tenso flessione retta X §§ 4.2.4.1.2.3 - 4.2.4.1.2.6 - 4.2.4.1.2.7 - 4.2.4.1.2.8 NTC18

Verifiche eseguite utilizzando la formula conservativa (6.2) §6.2.1 EN 1993-1-1:2005.

X	Comb.	Sfruttamento	Classe	NEd	NRd	Rid. NRd da VEd	Mx,Ed	Mx,Rd	Rid. Mx,Rd da VEd	Rid. Mx,Rd da NEd	ρx	ρy	Verifica
98.6	SLU 132	0.073	1	-4372.3	84315.5	1	12507	596667	1		0	0	Si

Verifica a presso/tenso flessione retta X SLD §§ 4.2.4.1.2.3 - 4.2.4.1.2.6 - 4.2.4.1.2.7 - 4.2.4.1.2.8 NTC18

Verifiche eseguite utilizzando la formula conservativa (6.2) §6.2.1 EN 1993-1-1:2005.

X	Comb.	Sfruttamento	Classe	NEd	NRd	Rid. NRd da VEd	Mx,Ed	Mx,Rd	Rid. Mx,Rd da VEd	Rid. Mx,Rd da NEd	ρx	ρy	Verifica
113.8	SLD 11	0.037	1	-2926.5	84315.5	1	1470	596667	1		0	0	Si

Verifiche ad instabilità

Caratteristiche iniziali

Membratura principale per controllo snellezza; Calcolo di snellezze ed N critici condotti secondo gli assi principali;
Curva X: c; Curva Y: c;
Svergolamento: Nessuno; la verifica a instabilità flesso-torsionale (svergolamento) non verrà eseguita.

Dati per instabilità attorno a x

Numero rit.	Presente	Ascissa	Campata	βx/m	Vincolo a entrambi estremi	λx/m	λVer
1	Si	0					
			1-2	1	Si	29.5	Si, (<200)
2	Si	227.6					

Dati per instabilità attorno a y

Numero rit.	Presente	Ascissa	Campata	βy/n	k,LT	kw,LT	Vincolo a entrambi estremi
1	Si	0					
			1-2	1	Si	106.3	Si, (<200)
2	Si	227.6					

Verifica di stabilità per pressoflessione §C.4.2.4.1.3.3.1 NTC18

X	Comb.	Sfruttamento	Classe	NEd	MxEq,Ed	MyEq,Ed	Area	Wx	Wy	χ,min	λ adim. x/m	λ adim. y/n	N,crit x/m	N,crit y/n	Verifica
0	SLU 99	0.144	1	-4482.5	10988	0	32.19	227.8	51.9	0.422	0.34	1.224	764699.9	59081.4	Si

Verifica di stabilità per pressoflessione SLD §C.4.2.4.1.3.3.1 NTC18

X	Comb.	Sfruttamento	Classe	NEd	MxEq,Ed	MyEq,Ed	Area	Wx	Wy	χ,min	λ adim. x/m	λ adim. y/n	N,crit x/m	N,crit y/n	Verifica
0	SLD 11	0.085	1	-2939.1	1273	0	32.19	227.8	51.9	0.422	0.34	1.224	764699.9	59081.4	Si

Verifica di stabilità a taglio anima Y §4.2.4.1.2.4 [4.2.27] NTC18

η	hw	tw	hw/tw max	Verifica
1.2	17.2	0.9	55.46	Si

Verifica di stabilità a taglio anima Y SLD §4.2.4.1.2.4 [4.2.27] NTC18

η	hw	tw	hw/tw max	Verifica
1.2	17.2	0.9	55.46	Si

Verifiche a deformabilità

Mensola X: No; Mensola Y: No.

Frecce lungo X

Ascissa freccia	Combinazione	Freccia	Luce	L/f	L/f,min	Tipo	Verifica
212.4	SLE RA 1	0	227.6	10000	250	Totale	Si
212.4	SLE RA 31	0	227.6	10000	250	Totale	Si
212.4	SLE RA 30	0	227.6	10000	250	Totale	Si
212.4	SLE RA 29	0	227.6	10000	250	Totale	Si
212.4	SLE RA 28	0	227.6	10000	250	Totale	Si
220	SLE RA 2	0	227.6	10000	350	Variabile	Si

Ascissa freccia	Combinazione	Freccia	Luce	L/f	L/f,min	Tipo	Verifica
212.4	SLE RA 31	0	227.6	10000	350	Variabile	Si
212.4	SLE RA 30	0	227.6	10000	350	Variabile	Si
212.4	SLE RA 29	0	227.6	10000	350	Variabile	Si
212.4	SLE RA 28	0	227.6	10000	350	Variabile	Si

Frecce lungo Y

Ascissa freccia	Combinazione	Freccia	Luce	L/f	L/f,min	Tipo	Verifica
113.8	SLE RA 1	0.002	227.6	10000	250	Totale	Si
113.8	SLE RA 31	0.012	227.6	10000	250	Totale	Si
113.8	SLE RA 30	0.012	227.6	10000	250	Totale	Si
113.8	SLE RA 29	0.01	227.6	10000	250	Totale	Si
113.8	SLE RA 28	0.01	227.6	10000	250	Totale	Si
212.4	SLE RA 2	0	227.6	10000	350	Variabile	Si
113.8	SLE RA 31	0.01	227.6	10000	350	Variabile	Si
113.8	SLE RA 30	0.01	227.6	10000	350	Variabile	Si
113.8	SLE RA 29	0.008	227.6	10000	350	Variabile	Si
113.8	SLE RA 28	0.008	227.6	10000	350	Variabile	Si

Superelemento in acciaio composto dall'asta 268

Caratteristiche del materiale

Acciaio: S275, fyk = 2750

Caratteristiche geometriche

Lunghezza: 227.6
Nodo iniziale: 20 Nodo finale: 65
Cerniera iniziale: Svincolo: M2, M3 Cerniera finale: Svincolo: M2, M3
Sovraresistenza: 0% Sisma Z: No

Caratteristiche della sezione

Sezione	Rotazione	Area	Jx	Jy	ix	iy	Wx	Wy	Wplx	Wply
UPN200	0	32.19	1911.41	147.68	7.71	2.14	191.14	26.92	227.82	51.87

Verifiche di resistenza

Verifiche a forza assiale §4.2.4.1.2.1 - §4.2.4.1.2.2 NTC18

X	Comb.	Sfruttamento	Classe	NEd	Nc,Rd	Nt,Rd	Riduzione da taglio	ρx	ρy	Verifica
0	SLU 131	0.025	1	-2106.3	84315.5		1	0	0	Si

Verifiche a forza assiale SLD §4.2.4.1.2.1 - §4.2.4.1.2.2 NTC18

X	Comb.	Sfruttamento	Classe	NEd	Nc,Rd	Nt,Rd	Riduzione da taglio	ρx	ρy	Verifica
0	SLD 9	0.018	1	-1545.5	84315.5		1	0	0	Si

Verifica a taglio Y §4.2.4.1.2.4 NTC18

X	Comb.	Sfruttamento	VEd	Vc,Rd	Av	Interazione taglio-torsione	Riduzione torsione	Verifica
0	SLU 131	0.009	239.4	26073.6	17.24	Considerata	1	Si

Verifica a taglio Y SLD §4.2.4.1.2.4 NTC18

X	Comb.	Sfruttamento	VEd	Vc,Rd	Av	Interazione taglio-torsione	Riduzione torsione	Verifica
227.6	SLD 10	0.001	-25.8	26038.1	17.24	Considerata	1	Si

Verifica a torsione §4.2.4.1.2.5 NTC18

X	Comb.	Sfruttamento torsione	TEd	TRd	Riduzione taglio resistente	Sfruttamento taglio-torsione	τEd,totale	τRd	Verifica
220	SLV 9	0.008	-112.8	14125.9	Considerata				Si

Verifica a torsione SLD §4.2.4.1.2.5 NTC18

X	Comb.	Sfruttamento torsione	TEd	TRd	Riduzione taglio resistente	Sfruttamento taglio-torsione	τEd,totale	τRd	Verifica
121.4	SLD 9	0.003	-48	14125.9	Considerata				Si

Verifica a presso/tenso flessione retta X §§ 4.2.4.1.2.3 - 4.2.4.1.2.6 - 4.2.4.1.2.7 - 4.2.4.1.2.8 NTC18

Verifiche eseguite utilizzando la formula conservativa (6.2) §6.2.1 EN 1993-1-1:2005.

X	Comb.	Sfruttamento	Classe	NEd	NRd	Rid. NRd da VEd	Mx,Ed	Mx,Rd	Rid. Mx,Rd da VEd	Rid. Mx,Rd da NEd	ρx	ρy	Verifica
98.6	SLU 98	0.045	1	-1996	84315.5	1	-12507	596667	1		0	0	Si

Verifica a presso/tenso flessione retta X SLD §§ 4.2.4.1.2.3 - 4.2.4.1.2.6 - 4.2.4.1.2.7 - 4.2.4.1.2.8 NTC18

Verifiche eseguite utilizzando la formula conservativa (6.2) §6.2.1 EN 1993-1-1:2005.

X	Comb.	Sfruttamento	Classe	NEd	NRd	Rid. NRd da VEd	Mx,Ed	Mx,Rd	Rid. Mx,Rd da VEd	Rid. Mx,Rd da NEd	ρx	ρy	Verifica
113.8	SLD 10	0.021	1	-1532.8	84315.5	1	-1470	596667	1		0	0	Si

Verifiche ad instabilità

Caratteristiche iniziali

Membratura principale per controllo snellezza; Calcolo di snellezze ed N critici condotti secondo gli assi principali;
Curva X: c; Curva Y: c;
Svergolamento: Nessuno; la verifica a instabilità flesso-torsionale (svergolamento) non verrà eseguita.

Dati per instabilità attorno a x

Numero rit.	Presente	Ascissa	Campata	βx/m	Vincolo a entrambi estremi	λx/m	λVer
1	Si	0					
			1-2	1	Si	29.5	Si, (<200)
2	Si	227.6					

Dati per instabilità attorno a y

Numero rit.	Presente	Ascissa	Campata	βy/n	k,LT	kw,LT	Vincolo a entrambi estremi
1	Si	0					
			1-2	1	Si	106.3	Si, (<200)
2	Si	227.6					

Verifica di stabilità per pressoflessione §C.4.2.4.1.3.3.1 NTC18

X	Comb.	Sfruttamento	Classe	NEd	MxEq,Ed	MyEq,Ed	Area	Wx	Wy	χ,min	λ adim. x/m	λ adim. y/n	N,crit x/m	N,crit y/n	Verifica
0	SLU 98	0.078	1	-2106.3	-10988	0	32.19	227.8	51.9	0.422	0.34	1.224	764699.9	59081.4	Si

Verifica di stabilità per pressoflessione SLD §C.4.2.4.1.3.3.1 NTC18

X	Comb.	Sfruttamento	Classe	NEd	MxEq,Ed	MyEq,Ed	Area	Wx	Wy	χ,min	λ adim. x/m	λ adim. y/n	N,crit x/m	N,crit y/n	Verifica
0	SLD 9	0.046	1	-1545.5	-1273	0	32.19	227.8	51.9	0.422	0.34	1.224	764699.9	59081.4	Si

Verifica di stabilità a taglio anima Y §4.2.4.1.2.4 [4.2.27] NTC18

η	hw	tw	hw/tw max	Verifica
1.2	17.2	0.9	55.46	Si

Verifica di stabilità a taglio anima Y SLD §4.2.4.1.2.4 [4.2.27] NTC18

η	hw	tw	hw/tw max	Verifica
1.2	17.2	0.9	55.46	Si

Verifiche a deformabilità

Mensola X: No; Mensola Y: No.

Frecce lungo X

Ascissa freccia	Combinazione	Freccia	Luce	L/f	L/f,min	Tipo	Verifica
212.4	SLE RA 1	0	227.6	10000	250	Totale	Si
212.4	SLE RA 31	0	227.6	10000	250	Totale	Si
212.4	SLE RA 30	0	227.6	10000	250	Totale	Si
212.4	SLE RA 29	0	227.6	10000	250	Totale	Si
212.4	SLE RA 28	0	227.6	10000	250	Totale	Si
220	SLE RA 2	0	227.6	10000	350	Variabile	Si
220	SLE RA 31	0	227.6	10000	350	Variabile	Si
220	SLE RA 30	0	227.6	10000	350	Variabile	Si
212.4	SLE RA 29	0	227.6	10000	350	Variabile	Si
212.4	SLE RA 28	0	227.6	10000	350	Variabile	Si

Frecce lungo Y

Ascissa freccia	Combinazione	Freccia	Luce	L/f	L/f,min	Tipo	Verifica
113.8	SLE RA 1	-0.002	227.6	10000	250	Totale	Si
113.8	SLE RA 31	-0.012	227.6	10000	250	Totale	Si
113.8	SLE RA 30	-0.012	227.6	10000	250	Totale	Si
113.8	SLE RA 29	-0.01	227.6	10000	250	Totale	Si
113.8	SLE RA 28	-0.01	227.6	10000	250	Totale	Si
136.6	SLE RA 2	0	227.6	10000	350	Variabile	Si
113.8	SLE RA 31	-0.01	227.6	10000	350	Variabile	Si
113.8	SLE RA 30	-0.01	227.6	10000	350	Variabile	Si
113.8	SLE RA 29	-0.008	227.6	10000	350	Variabile	Si
113.8	SLE RA 28	-0.008	227.6	10000	350	Variabile	Si

Superelemento in acciaio composto dall'asta 269

Caratteristiche del materiale

Acciaio: S275, fyk = 2750

Caratteristiche geometriche

Lunghezza: 227.6
Nodo iniziale: 20 Nodo finale: 57
Cerniera iniziale: Svincolo: M2, M3 Cerniera finale: Svincolo: M2, M3
Sovraresistenza: 0% Sisma Z: No

Caratteristiche della sezione

Sezione	Rotazione	Area	Jx	Jy	ix	iy	Wx	Wy	Wplx	Wply
UPN200	180	32.19	1911.41	147.68	7.71	2.14	191.14	26.92	227.82	51.87

Verifiche di resistenza

Verifiche a forza assiale §4.2.4.1.2.1 - §4.2.4.1.2.2 NTC18

X	Comb.	Sfruttamento	Classe	NEd	Nc,Rd	Nt,Rd	Riduzione da taglio	ρx	ρy	Verifica
0	SLU 132	0.048	1	-4077.8	84315.5		1	0	0	Si

Verifiche a forza assiale SLD §4.2.4.1.2.1 - §4.2.4.1.2.2 NTC18

X	Comb.	Sfruttamento	Classe	NEd	Nc,Rd	Nt,Rd	Riduzione da taglio	ρx	ρy	Verifica
0	SLD 11	0.032	1	-2661.4	84315.5		1	0	0	Si

Verifica a taglio Y §4.2.4.1.2.4 NTC18

X	Comb.	Sfruttamento	VEd	Vc,Rd	Av	Interazione taglio-torsione	Riduzione torsione	Verifica
0	SLU 96	0.009	-239.5	26073.6	17.24	Considerata	1	Si

Verifica a taglio Y SLD §4.2.4.1.2.4 NTC18

X	Comb.	Sfruttamento	VEd	Vc,Rd	Av	Interazione taglio-torsione	Riduzione torsione	Verifica
227.6	SLD 12	0.001	25.8	26039.5	17.24	Considerata	1	Si

Verifica a torsione §4.2.4.1.2.5 NTC18

X	Comb.	Sfruttamento torsione	TEd	TRd	Riduzione taglio resistente	Sfruttamento taglio-torsione	τEd,totale	τRd	Verifica
106.2	SLV 12	0.008	110.8	14125.9	Considerata				Si

Verifica a torsione SLD §4.2.4.1.2.5 NTC18

X	Comb.	Sfruttamento torsione	TEd	TRd	Riduzione taglio resistente	Sfruttamento taglio-torsione	τEd,totale	τRd	Verifica
212.4	SLD 12	0.003	46	14125.9	Considerata				Si

Verifica a presso/tenso flessione retta X §§ 4.2.4.1.2.3 - 4.2.4.1.2.6 - 4.2.4.1.2.7 - 4.2.4.1.2.8 NTC18

Verifiche eseguite utilizzando la formula conservativa (6.2) §6.2.1 EN 1993-1-1:2005.

X	Comb.	Sfruttamento	Classe	NEd	NRd	Rid. NRd da VEd	Mx,Ed	Mx,Rd	Rid. Mx,Rd da VEd	Rid. Mx,Rd da NEd	ρx	ρy	Verifica
98.6	SLU 132	0.068	1	-3967.5	84315.5	1	12516	596667	1		0	0	Si

Verifica a presso/tenso flessione retta X SLD §§ 4.2.4.1.2.3 - 4.2.4.1.2.6 - 4.2.4.1.2.7 - 4.2.4.1.2.8 NTC18

Verifiche eseguite utilizzando la formula conservativa (6.2) §6.2.1 EN 1993-1-1:2005.

X	Comb.	Sfruttamento	Classe	NEd	NRd	Rid. NRd da VEd	Mx,Ed	Mx,Rd	Rid. Mx,Rd da VEd	Rid. Mx,Rd da NEd	ρx	ρy	Verifica
113.8	SLD 12	0.034	1	-2648.7	84315.5	1	1470	596667	1		0	0	Si

Verifiche ad instabilità

Caratteristiche iniziali

Membratura principale per controllo snellezza; Calcolo di snellezze ed N critici condotti secondo gli assi principali;
Curva X: c; Curva Y: c;
Svergolamento: Nessuno; la verifica a instabilità flesso-torsionale (svergolamento) non verrà eseguita.

Dati per instabilità attorno a x

Numero rit.	Presente	Ascissa	Campata	βx/m	Vincolo a entrambi estremi	λx/m	λVer
1	Si	0					
			1-2	1	Si	29.5	Si, (<200)
2	Si	227.6					

Dati per instabilità attorno a y

Numero rit.	Presente	Ascissa	Campata	βy/n	k,LT	kw,LT	Vincolo a entrambi estremi
1	Si	0					
			1-2	1	Si	106.3	Si, (<200)
2	Si	227.6					

Verifica di stabilità per pressoflessione §C.4.2.4.1.3.3.1 NTC18

X	Comb.	Sfruttamento	Classe	NEd	MxEq,Ed	MyEq,Ed	Area	Wx	Wy	χ,min	λ adim. x/m	λ adim. y/n	N,crit x/m	N,crit y/n	Verifica
0	SLU 99	0.133	1	-4077.8	11000	0	32.19	227.8	51.9	0.422	0.34	1.224	764699.9	59081.4	Si

Verifica di stabilità per pressoflessione SLD §C.4.2.4.1.3.3.1 NTC18

X	Comb.	Sfruttamento	Classe	NEd	MxEq,Ed	MyEq,Ed	Area	Wx	Wy	χ,min	λ adim. x/m	λ adim. y/n	N,crit x/m	N,crit y/n	Verifica
0	SLD 11	0.077	1	-2661.4	1273	0	32.19	227.8	51.9	0.422	0.34	1.224	764699.9	59081.4	Si

Verifica di stabilità a taglio anima Y §4.2.4.1.2.4 [4.2.27] NTC18

η	hw	tw	hw/tw max	Verifica
1.2	17.2	0.9	55.46	Si

Verifica di stabilità a taglio anima Y SLD §4.2.4.1.2.4 [4.2.27] NTC18

η	hw	tw	hw/tw max	Verifica
1.2	17.2	0.9	55.46	Si

Verifiche a deformabilità

Mensola X: No; Mensola Y: No.

Frecce lungo X

Ascissa freccia	Combinazione	Freccia	Luce	L/f	L/f,min	Tipo	Verifica
220	SLE RA 1	0	227.6	10000	250	Totale	Si
220	SLE RA 31	0	227.6	10000	250	Totale	Si
220	SLE RA 30	0	227.6	10000	250	Totale	Si
220	SLE RA 29	0	227.6	10000	250	Totale	Si
220	SLE RA 28	0	227.6	10000	250	Totale	Si
182.1	SLE RA 2	0	227.6	10000	350	Variabile	Si
174.5	SLE RA 31	0	227.6	10000	350	Variabile	Si
174.5	SLE RA 30	0	227.6	10000	350	Variabile	Si
174.5	SLE RA 29	0	227.6	10000	350	Variabile	Si
174.5	SLE RA 28	0	227.6	10000	350	Variabile	Si

Frecce lungo Y

Ascissa freccia	Combinazione	Freccia	Luce	L/f	L/f,min	Tipo	Verifica
113.8	SLE RA 1	0.002	227.6	10000	250	Totale	Si
113.8	SLE RA 31	0.012	227.6	10000	250	Totale	Si
113.8	SLE RA 30	0.012	227.6	10000	250	Totale	Si
113.8	SLE RA 29	0.01	227.6	10000	250	Totale	Si

Ascissa freccia	Combinazione	Freccia	Luce	L/f	L/f,min	Tipo	Verifica
113.8	SLE RA 28	0.01	227.6	10000	250	Totale	Si
151.7	SLE RA 2	0	227.6	10000	350	Variabile	Si
113.8	SLE RA 31	0.01	227.6	10000	350	Variabile	Si
113.8	SLE RA 30	0.01	227.6	10000	350	Variabile	Si
113.8	SLE RA 29	0.008	227.6	10000	350	Variabile	Si
113.8	SLE RA 28	0.008	227.6	10000	350	Variabile	Si

Superelemento in acciaio composto dall'asta 270

Caratteristiche del materiale

Acciaio: S275, fyk = 2750

Caratteristiche geometriche

Lunghezza: 227.6
Nodo iniziale: 18 Nodo finale: 61
Cerniera iniziale: Svincolo: M2, M3 Cerniera finale: Svincolo: M2, M3
Sovraresistenza: 0% Sisma Z: No

Caratteristiche della sezione

Sezione	Rotazione	Area	Jx	Jy	ix	iy	Wx	Wy	Wplx	Wply
UPN200	0	32.19	1911.41	147.68	7.71	2.14	191.14	26.92	227.82	51.87

Verifiche di resistenza

Verifiche a forza assiale §4.2.4.1.2.1 - §4.2.4.1.2.2 NTC18

X	Comb.	Sfruttamento	Classe	NEd	Nc,Rd	Nt,Rd	Riduzione da taglio	ρx	ρy	Verifica
0	SLU 98	0.038	1	-3225.9	84315.5		1	0	0	Si

Verifiche a forza assiale SLD §4.2.4.1.2.1 - §4.2.4.1.2.2 NTC18

X	Comb.	Sfruttamento	Classe	NEd	Nc,Rd	Nt,Rd	Riduzione da taglio	ρx	ρy	Verifica
0	SLD 9	0.025	1	-2068.6	84315.5		1	0	0	Si

Verifica a taglio Y §4.2.4.1.2.4 NTC18

X	Comb.	Sfruttamento	VEd	Vc,Rd	Av	Interazione taglio-torsione	Riduzione torsione	Verifica
0	SLU 132	0.009	239.4	26073.6	17.24	Considerata	1	Si

Verifica a taglio Y SLD §4.2.4.1.2.4 NTC18

X	Comb.	Sfruttamento	VEd	Vc,Rd	Av	Interazione taglio-torsione	Riduzione torsione	Verifica
227.6	SLD 10	0.001	-25.8	26039.5	17.24	Considerata	1	Si

Verifica a torsione §4.2.4.1.2.5 NTC18

X	Comb.	Sfruttamento torsione	TEd	TRd	Riduzione taglio resistente	Sfruttamento taglio-torsione	τEd,totale	τRd	Verifica
15.2	SLV 9	0.008	-111.5	14125.9	Considerata				Si

Verifica a torsione SLD §4.2.4.1.2.5 NTC18

X	Comb.	Sfruttamento torsione	TEd	TRd	Riduzione taglio resistente	Sfruttamento taglio-torsione	τEd,totale	τRd	Verifica
212.4	SLD 10	0.003	-46.1	14125.9	Considerata				Si

Verifica a presso/tenso flessione retta X §§ 4.2.4.1.2.3 - 4.2.4.1.2.6 - 4.2.4.1.2.7 - 4.2.4.1.2.8 NTC18

Verifiche eseguite utilizzando la formula conservativa (6.2) §6.2.1 EN 1993-1-1:2005.

X	Comb.	Sfruttamento	Classe	NEd	NRd	Rid. NRd da VEd	Mx,Ed	Mx,Rd	Rid. Mx,Rd da VEd	Rid. Mx,Rd da NEd	ρx	ρy	Verifica
98.6	SLU 131	0.058	1	-3115.7	84315.5	1	-12501	596667	1		0	0	Si

Verifica a presso/tenso flessione retta X SLD §§ 4.2.4.1.2.3 - 4.2.4.1.2.6 - 4.2.4.1.2.7 - 4.2.4.1.2.8 NTC18

Verifiche eseguite utilizzando la formula conservativa (6.2) §6.2.1 EN 1993-1-1:2005.

X	Comb.	Sfruttamento	Classe	NEd	NRd	Rid. NRd da VEd	Mx,Ed	Mx,Rd	Rid. Mx,Rd da VEd	Rid. Mx,Rd da NEd	ρx	ρy	Verifica
113.8	SLD 9	0.027	1	-2055.9	84315.5	1	-1470	596667	1		0	0	Si

Verifiche ad instabilità

Caratteristiche iniziali

Membratura principale per controllo snellezza; Calcolo di snellezze ed N critici condotti secondo gli assi principali;
Curva X: c; Curva Y: c;
Svergolamento: Nessuno; la verifica a instabilità flesso-torsionale (svergolamento) non verrà eseguita.

Dati per instabilità attorno a x

Numero rit.	Presente	Ascissa	Campata	βx/m	Vincolo a entrambi estremi	λx/m	λVer
1	Si	0					
			1-2	1	Si	29.5	Si, (<200)
2	Si	227.6					

Dati per instabilità attorno a y

Numero rit.	Presente	Ascissa	Campata	βy/n	k,LT	kw,LT	Vincolo a entrambi estremi
1	Si	0					
			1-2	1	Si	106.3	Si, (<200)

Numero rit.	Presente	Ascissa	Campata	βy/n	k,LT	kw,LT	Vincolo a entrambi estremi
2	Si	227.6					

Verifica di stabilità per pressoflessione §C.4.2.4.1.3.3.1 NTC18

X	Comb.	Sfruttamento	Classe	NEd	MxEq,Ed	MyEq,Ed	Area	Wx	Wy	χ,min	λ adim. x/m	λ adim. y/n	N,crit x/m	N,crit y/n	Verifica
0	SLU 131	0.109	1	-3225.9	-10979	0	32.19	227.8	51.9	0.422	0.34	1.224	764699.9	59081.4	Si

Verifica di stabilità per pressoflessione SLD §C.4.2.4.1.3.3.1 NTC18

X	Comb.	Sfruttamento	Classe	NEd	MxEq,Ed	MyEq,Ed	Area	Wx	Wy	χ,min	λ adim. x/m	λ adim. y/n	N,crit x/m	N,crit y/n	Verifica
0	SLD 9	0.06	1	-2068.6	-1273	0	32.19	227.8	51.9	0.422	0.34	1.224	764699.9	59081.4	Si

Verifica di stabilità a taglio anima Y §4.2.4.1.2.4 [4.2.27] NTC18

η	hw	tw	hw/tw max	Verifica
1.2	17.2	0.9	55.46	Si

Verifica di stabilità a taglio anima Y SLD §4.2.4.1.2.4 [4.2.27] NTC18

η	hw	tw	hw/tw max	Verifica
1.2	17.2	0.9	55.46	Si

Verifiche a deformabilità

Mensola X: No; Mensola Y: No.

Frecce lungo X

Ascissa freccia	Combinazione	Freccia	Luce	L/f	L/f,min	Tipo	Verifica
212.4	SLE RA 1	0	227.6	10000	250	Totale	Si
212.4	SLE RA 31	0	227.6	10000	250	Totale	Si
212.4	SLE RA 30	0	227.6	10000	250	Totale	Si
212.4	SLE RA 29	0	227.6	10000	250	Totale	Si
212.4	SLE RA 28	0	227.6	10000	250	Totale	Si
212.4	SLE RA 2	0	227.6	10000	350	Variabile	Si
197.3	SLE RA 31	0	227.6	10000	350	Variabile	Si
197.3	SLE RA 30	0	227.6	10000	350	Variabile	Si
182.1	SLE RA 29	0	227.6	10000	350	Variabile	Si
166.9	SLE RA 28	0	227.6	10000	350	Variabile	Si

Frecce lungo Y

Ascissa freccia	Combinazione	Freccia	Luce	L/f	L/f,min	Tipo	Verifica
113.8	SLE RA 1	-0.002	227.6	10000	250	Totale	Si
113.8	SLE RA 31	-0.012	227.6	10000	250	Totale	Si
113.8	SLE RA 30	-0.012	227.6	10000	250	Totale	Si
113.8	SLE RA 29	-0.01	227.6	10000	250	Totale	Si
113.8	SLE RA 28	-0.01	227.6	10000	250	Totale	Si
136.6	SLE RA 2	0	227.6	10000	350	Variabile	Si
113.8	SLE RA 31	-0.01	227.6	10000	350	Variabile	Si
113.8	SLE RA 30	-0.01	227.6	10000	350	Variabile	Si
113.8	SLE RA 29	-0.008	227.6	10000	350	Variabile	Si
113.8	SLE RA 28	-0.008	227.6	10000	350	Variabile	Si

Superelemento in acciaio composto dall'asta 271

Caratteristiche del materiale

Acciaio: S275, fyk = 2750

Caratteristiche geometriche

Lunghezza: 227.6
Nodo iniziale: 18 Nodo finale: 53
Cerniera iniziale: Svincolo: M2, M3 Cerniera finale: Svincolo: M2, M3
Sovraresistenza: 0% Sisma Z: No

Caratteristiche della sezione

Sezione	Rotazione	Area	Jx	Jy	ix	iy	Wx	Wy	Wplx	Wply
UPN200	180	32.19	1911.41	147.68	7.71	2.14	191.14	26.92	227.82	51.87

Verifiche di resistenza

Verifiche a forza assiale §4.2.4.1.2.1 - §4.2.4.1.2.2 NTC18

X	Comb.	Sfruttamento	Classe	NEd	Nc,Rd	Nt,Rd	Riduzione da taglio	ρx	ρy	Verifica
0	SLU 118	0.049	1	-4153.3	84315.5		1	0	0	Si

Verifiche a forza assiale SLD §4.2.4.1.2.1 - §4.2.4.1.2.2 NTC18

X	Comb.	Sfruttamento	Classe	NEd	Nc,Rd	Nt,Rd	Riduzione da taglio	ρx	ρy	Verifica
0	SLD 11	0.017	1	-1462	84315.5		1	0	0	Si

Verifica a taglio Y §4.2.4.1.2.4 NTC18

X	Comb.	Sfruttamento	VEd	Vc,Rd	Av	Interazione taglio-torsione	Riduzione torsione	Verifica
0	SLU 132	0.009	-239.4	26064.4	17.24	Considerata	1	Si

Verifica a taglio Y SLD §4.2.4.1.2.4 NTC18

X	Comb.	Sfruttamento	VEd	Vc,Rd	Av	Interazione taglio-torsione	Riduzione torsione	Verifica
227.6	SLD 5	0.001	25.8	26037.7	17.24	Considerata	1	Si

Verifica a torsione §4.2.4.1.2.5 NTC18

X	Comb.	Sfruttamento torsione	TEd	TRd	Riduzione taglio resistente	Sfruttamento taglio-torsione	τEd,totale	τRd	Verifica
220	SLV 6	0.009	-121.1	14125.9	Considerata				Si

Verifica a torsione SLD §4.2.4.1.2.5 NTC18

X	Comb.	Sfruttamento torsione	TEd	TRd	Riduzione taglio resistente	Sfruttamento taglio-torsione	τEd,totale	τRd	Verifica
220	SLD 5	0.003	-48.5	14125.9	Considerata				Si

Verifica a presso/tenso flessione retta X §§ 4.2.4.1.2.3 - 4.2.4.1.2.6 - 4.2.4.1.2.7 - 4.2.4.1.2.8 NTC18

Verifiche eseguite utilizzando la formula conservativa (6.2) §6.2.1 EN 1993-1-1:2005.

X	Comb.	Sfruttamento	Classe	NEd	NRd	Rid. NRd da VEd	Mx,Ed	Mx,Rd	Rid. Mx,Rd da VEd	Rid. Mx,Rd da NEd	ρx	ρy	Verifica
98.6	SLU 99	0.063	1	-3580.5	84315.5	1	12508	596667	1		0	0	Si

Verifica a presso/tenso flessione retta X SLD §§ 4.2.4.1.2.3 - 4.2.4.1.2.6 - 4.2.4.1.2.7 - 4.2.4.1.2.8 NTC18

Verifiche eseguite utilizzando la formula conservativa (6.2) §6.2.1 EN 1993-1-1:2005.

X	Comb.	Sfruttamento	Classe	NEd	NRd	Rid. NRd da VEd	Mx,Ed	Mx,Rd	Rid. Mx,Rd da VEd	Rid. Mx,Rd da NEd	ρx	ρy	Verifica
113.8	SLD 12	0.02	1	-1449.3	84315.5	1	1470	596667	1		0	0	Si

Verifiche ad instabilità

Caratteristiche iniziali

Membratura principale per controllo snellezza; Calcolo di snellezze ed N critici condotti secondo gli assi principali;
Curva X: c; Curva Y: c;
Svergolamento: Nessuno; la verifica a instabilità flesso-torsionale (svergolamento) non verrà eseguita.

Dati per instabilità attorno a x

Numero rit.	Presente	Ascissa	Campata	βx/m	Vincolo a entrambi estremi	λx/m	λVer
1	Si	0					
			1-2	1	Si	29.5	Si, (<200)
2	Si	227.6					

Dati per instabilità attorno a y

Numero rit.	Presente	Ascissa	Campata	βy/n	k,LT	kw,LT	Vincolo a entrambi estremi
1	Si	0					
			1-2	1	Si	106.3	Si, (<200)
2	Si	227.6					

Verifica di stabilità per pressoflessione §C.4.2.4.1.3.3.1 NTC18

X	Comb.	Sfruttamento	Classe	NEd	MxEq,Ed	MyEq,Ed	Area	Wx	Wy	χ,min	λ adim. x/m	λ adim. y/n	N,crit x/m	N,crit y/n	Verifica
0	SLU 85	0.128	1	-4153.3	6473	0	32.19	227.8	51.9	0.422	0.34	1.224	764699.9	59081.4	Si

Verifica di stabilità per pressoflessione SLD §C.4.2.4.1.3.3.1 NTC18

X	Comb.	Sfruttamento	Classe	NEd	MxEq,Ed	MyEq,Ed	Area	Wx	Wy	χ,min	λ adim. x/m	λ adim. y/n	N,crit x/m	N,crit y/n	Verifica
0	SLD 11	0.043	1	-1462	1273	0	32.19	227.8	51.9	0.422	0.34	1.224	764699.9	59081.4	Si

Verifica di stabilità a taglio anima Y §4.2.4.1.2.4 [4.2.27] NTC18

η	hw	tw	hw/tw max	Verifica
1.2	17.2	0.9	55.46	Si

Verifica di stabilità a taglio anima Y SLD §4.2.4.1.2.4 [4.2.27] NTC18

η	hw	tw	hw/tw max	Verifica
1.2	17.2	0.9	55.46	Si

Verifiche a deformabilità

Mensola X: No; Mensola Y: No.

Frecce lungo X

Ascissa freccia	Combinazione	Freccia	Luce	L/f	L/f,min	Tipo	Verifica
189.7	SLE RA 1	0	227.6	10000	250	Totale	Si
151.7	SLE RA 31	0	227.6	10000	250	Totale	Si
189.7	SLE RA 30	0	227.6	10000	250	Totale	Si
151.7	SLE RA 29	0	227.6	10000	250	Totale	Si
189.7	SLE RA 28	0	227.6	10000	250	Totale	Si
151.7	SLE RA 2	0	227.6	10000	350	Variabile	Si
151.7	SLE RA 31	0	227.6	10000	350	Variabile	Si
212.4	SLE RA 30	0	227.6	10000	350	Variabile	Si
151.7	SLE RA 29	0	227.6	10000	350	Variabile	Si
204.8	SLE RA 28	0	227.6	10000	350	Variabile	Si

Frecce lungo Y

Ascissa freccia	Combinazione	Freccia	Luce	L/f	L/f,min	Tipo	Verifica
113.8	SLE RA 1	0.002	227.6	10000	250	Totale	Si
113.8	SLE RA 31	0.012	227.6	10000	250	Totale	Si
113.8	SLE RA 30	0.012	227.6	10000	250	Totale	Si
113.8	SLE RA 29	0.01	227.6	10000	250	Totale	Si
113.8	SLE RA 28	0.01	227.6	10000	250	Totale	Si
204.8	SLE RA 2	0	227.6	10000	350	Variabile	Si
113.8	SLE RA 31	0.01	227.6	10000	350	Variabile	Si
113.8	SLE RA 30	0.01	227.6	10000	350	Variabile	Si
113.8	SLE RA 29	0.008	227.6	10000	350	Variabile	Si
113.8	SLE RA 28	0.008	227.6	10000	350	Variabile	Si

Superelemento in acciaio composto dall'asta 272

Caratteristiche del materiale

Acciaio: S275, fyk = 2750

Caratteristiche geometriche

Lunghezza: 227.6
Nodo iniziale: 16 Nodo finale: 57
Cerniera iniziale: Svincolo: M2, M3 Cerniera finale: Svincolo: M2, M3
Sovraresistenza: 0% Sisma Z: No

Caratteristiche della sezione

Sezione	Rotazione	Area	Jx	Jy	ix	iy	Wx	Wy	Wplx	Wply
UPN200	0	32.19	1911.41	147.68	7.71	2.14	191.14	26.92	227.82	51.87

Verifiche di resistenza

Verifiche a forza assiale §4.2.4.1.2.1 - §4.2.4.1.2.2 NTC18

X	Comb.	Sfruttamento	Classe	NEd	Nc,Rd	Nt,Rd	Riduzione da taglio	ρx	ρy	Verifica
0	SLU 131	0.043	1	-3631.4	84315.5		1	0	0	Si

Verifiche a forza assiale SLD §4.2.4.1.2.1 - §4.2.4.1.2.2 NTC18

X	Comb.	Sfruttamento	Classe	NEd	Nc,Rd	Nt,Rd	Riduzione da taglio	ρx	ρy	Verifica
0	SLD 9	0.028	1	-2351.7	84315.5		1	0	0	Si

Verifica a taglio Y §4.2.4.1.2.4 NTC18

X	Comb.	Sfruttamento	VEd	Vc,Rd	Av	Interazione taglio-torsione	Riduzione torsione	Verifica
0	SLU 98	0.009	239.5	26065.2	17.24	Considerata	1	Si

Verifica a taglio Y SLD §4.2.4.1.2.4 NTC18

X	Comb.	Sfruttamento	VEd	Vc,Rd	Av	Interazione taglio-torsione	Riduzione torsione	Verifica
227.6	SLD 5	0.001	-25.8	26029.8	17.24	Considerata	1	Si

Verifica a torsione §4.2.4.1.2.5 NTC18

X	Comb.	Sfruttamento torsione	TEd	TRd	Riduzione taglio resistente	Sfruttamento taglio-torsione	τEd,totale	τRd	Verifica
0	SLV 5	0.01	-141.4	14125.9	Considerata				Si

Verifica a torsione SLD §4.2.4.1.2.5 NTC18

X	Comb.	Sfruttamento torsione	TEd	TRd	Riduzione taglio resistente	Sfruttamento taglio-torsione	τEd,totale	τRd	Verifica
227.6	SLD 6	0.004	-59.2	14125.9	Considerata				Si

Verifica a presso/tenso flessione retta X §§ 4.2.4.1.2.3 - 4.2.4.1.2.6 - 4.2.4.1.2.7 - 4.2.4.1.2.8 NTC18

Verifiche eseguite utilizzando la formula conservativa (6.2) §6.2.1 EN 1993-1-1:2005.

X	Comb.	Sfruttamento	Classe	NEd	NRd	Rid. NRd da VEd	Mx,Ed	Mx,Rd	Rid. Mx,Rd da VEd	Rid. Mx,Rd da NEd	ρx	ρy	Verifica
98.6	SLU 131	0.063	1	-3521.2	84315.5	1	-12510	596667	1		0	0	Si

Verifica a presso/tenso flessione retta X SLD §§ 4.2.4.1.2.3 - 4.2.4.1.2.6 - 4.2.4.1.2.7 - 4.2.4.1.2.8 NTC18

Verifiche eseguite utilizzando la formula conservativa (6.2) §6.2.1 EN 1993-1-1:2005.

X	Comb.	Sfruttamento	Classe	NEd	NRd	Rid. NRd da VEd	Mx,Ed	Mx,Rd	Rid. Mx,Rd da VEd	Rid. Mx,Rd da NEd	ρx	ρy	Verifica
113.8	SLD 10	0.03	1	-2339.1	84315.5	1	-1470	596667	1		0	0	Si

Verifiche ad instabilità

Caratteristiche iniziali

Membratura principale per controllo snellezza; Calcolo di snellezze ed N critici condotti secondo gli assi principali;
Curva X: c; Curva Y: c;
Svergolamento: Nessuno; la verifica a instabilità flesso-torsionale (svergolamento) non verrà eseguita.

Dati per instabilità attorno a x

Numero rit.	Presente	Ascissa	Campata	βx/m	Vincolo a entrambi estremi	λx/m	λVer
1	Si	0					
			1-2	1	Si	29.5	Si, (<200)
2	Si	227.6					

Dati per instabilità attorno a y

Numero rit.	Presente	Ascissa	Campata	βy/n	k,LT	kw,LT	Vincolo a entrambi estremi
1	Si	0					
			1-2	1	Si	106.3	Si, (<200)
2	Si	227.6					

Verifica di stabilità per pressoflessione §C.4.2.4.1.3.3.1 NTC18

X	Comb.	Sfruttamento	Classe	NEd	MxEq,Ed	MyEq,Ed	Area	Wx	Wy	χ,min	λ adim. x/m	λ adim. y/n	N,crit x/m	N,crit y/n	Verifica
0	SLU 98	0.12	1	-3631.4	-10991	0	32.19	227.8	51.9	0.422	0.34	1.224	764699.9	59081.4	Si

Verifica di stabilità per pressoflessione SLD §C.4.2.4.1.3.3.1 NTC18

X	Comb.	Sfruttamento	Classe	NEd	MxEq,Ed	MyEq,Ed	Area	Wx	Wy	χ,min	λ adim. x/m	λ adim. y/n	N,crit x/m	N,crit y/n	Verifica
0	SLD 9	0.068	1	-2351.7	-1273	0	32.19	227.8	51.9	0.422	0.34	1.224	764699.9	59081.4	Si

Verifica di stabilità a taglio anima Y §4.2.4.1.2.4 [4.2.27] NTC18

η	hw	tw	hw/tw max	Verifica
1.2	17.2	0.9	55.46	Si

Verifica di stabilità a taglio anima Y SLD §4.2.4.1.2.4 [4.2.27] NTC18

η	hw	tw	hw/tw max	Verifica
1.2	17.2	0.9	55.46	Si

Verifiche a deformabilità

Mensola X: No; Mensola Y: No.

Frecce lungo X

Ascissa freccia	Combinazione	Freccia	Luce	L/f	L/f,min	Tipo	Verifica
166.9	SLE RA 1	0	227.6	10000	250	Totale	Si
166.9	SLE RA 31	0	227.6	10000	250	Totale	Si
166.9	SLE RA 30	0	227.6	10000	250	Totale	Si
166.9	SLE RA 29	0	227.6	10000	250	Totale	Si
166.9	SLE RA 28	0	227.6	10000	250	Totale	Si
174.5	SLE RA 2	0	227.6	10000	350	Variabile	Si
220	SLE RA 31	0	227.6	10000	350	Variabile	Si
220	SLE RA 30	0	227.6	10000	350	Variabile	Si
189.7	SLE RA 29	0	227.6	10000	350	Variabile	Si
189.7	SLE RA 28	0	227.6	10000	350	Variabile	Si

Frecce lungo Y

Ascissa freccia	Combinazione	Freccia	Luce	L/f	L/f,min	Tipo	Verifica
113.8	SLE RA 1	-0.002	227.6	10000	250	Totale	Si
113.8	SLE RA 31	-0.012	227.6	10000	250	Totale	Si
113.8	SLE RA 30	-0.012	227.6	10000	250	Totale	Si
113.8	SLE RA 29	-0.01	227.6	10000	250	Totale	Si
113.8	SLE RA 28	-0.01	227.6	10000	250	Totale	Si
182.1	SLE RA 2	0	227.6	10000	350	Variabile	Si
113.8	SLE RA 31	-0.01	227.6	10000	350	Variabile	Si
113.8	SLE RA 30	-0.01	227.6	10000	350	Variabile	Si
113.8	SLE RA 29	-0.008	227.6	10000	350	Variabile	Si
113.8	SLE RA 28	-0.008	227.6	10000	350	Variabile	Si

Superelemento in acciaio composto dall'asta 273

Caratteristiche del materiale

Acciaio: S275, fyk = 2750

Caratteristiche geometriche

Lunghezza: 227.6
Nodo iniziale: 16 Nodo finale: 49
Cerniera iniziale: Svincolo: M2, M3 Cerniera finale: Svincolo: M2, M3
Sovraresistenza: 0% Sisma Z: No

Caratteristiche della sezione

Sezione	Rotazione	Area	Jx	Jy	ix	iy	Wx	Wy	Wplx	Wply
UPN200	180	32.19	1911.41	147.68	7.71	2.14	191.14	26.92	227.82	51.87

Verifiche di resistenza

Verifiche a forza assiale §4.2.4.1.2.1 - §4.2.4.1.2.2 NTC18

X	Comb.	Sfruttamento	Classe	NEd	Nc,Rd	Nt,Rd	Riduzione da taglio	ρx	ρy	Verifica
0	SLU 106	0.079	1	-6634.4	84315.5		1	0	0	Si

Verifiche a forza assiale SLD §4.2.4.1.2.1 - §4.2.4.1.2.2 NTC18

X	Comb.	Sfruttamento	Classe	NEd	Nc,Rd	Nt,Rd	Riduzione da taglio	ρx	ρy	Verifica
0	SLD 11	0.017	1	-1447.1	84315.5		1	0	0	Si

Verifica a taglio Y §4.2.4.1.2.4 NTC18

X	Comb.	Sfruttamento	VEd	Vc,Rd	Av	Interazione taglio-torsione	Riduzione torsione	Verifica
0	SLU 118	0.026	-670.6	26045.7	17.24	Considerata	1	Si

Verifica a taglio Y SLD §4.2.4.1.2.4 NTC18

X	Comb.	Sfruttamento	VEd	Vc,Rd	Av	Interazione taglio-torsione	Riduzione torsione	Verifica
227.6	SLD 5	0.001	25.8	26039.4	17.24	Considerata	1	Si

Verifica a torsione §4.2.4.1.2.5 NTC18

X	Comb.	Sfruttamento torsione	TEd	TRd	Riduzione taglio resistente	Sfruttamento taglio-torsione	τEd,totale	τRd	Verifica
0	SLV 5	0.008	-119.9	14125.9	Considerata				Si

Verifica a torsione SLD §4.2.4.1.2.5 NTC18

X	Comb.	Sfruttamento torsione	TEd	TRd	Riduzione taglio resistente	Sfruttamento taglio-torsione	τEd,totale	τRd	Verifica
121.4	SLD 5	0.003	-46.3	14125.9	Considerata				Si

Verifica a presso/tenso flessione retta X §§ 4.2.4.1.2.3 - 4.2.4.1.2.6 - 4.2.4.1.2.7 - 4.2.4.1.2.8 NTC18

Verifiche eseguite utilizzando la formula conservativa (6.2) §6.2.1 EN 1993-1-1:2005.

X	Comb.	Sfruttamento	Classe	NEd	NRd	Rid. NRd da VEd	Mx,Ed	Mx,Rd	Rid. Mx,Rd da VEd	Rid. Mx,Rd da NEd	ρx	ρy	Verifica
98.6	SLU 73	0.133	1	-6322.3	84315.5	1	34665	596667	1		0	0	Si

Verifica a presso/tenso flessione retta X SLD §§ 4.2.4.1.2.3 - 4.2.4.1.2.6 - 4.2.4.1.2.7 - 4.2.4.1.2.8 NTC18

Verifiche eseguite utilizzando la formula conservativa (6.2) §6.2.1 EN 1993-1-1:2005.

X	Comb.	Sfruttamento	Classe	NEd	NRd	Rid. NRd da VEd	Mx,Ed	Mx,Rd	Rid. Mx,Rd da VEd	Rid. Mx,Rd da NEd	ρx	ρy	Verifica
113.8	SLD 11	0.019	1	-1434.5	84315.5	1	1470	596667	1		0	0	Si

Verifiche ad instabilità

Caratteristiche iniziali

Membratura principale per controllo snellezza; Calcolo di snellezze ed N critici condotti secondo gli assi principali;
Curva X: c; Curva Y: c;
Svergolamento: Nessuno; la verifica a instabilità flesso-torsionale (svergolamento) non verrà eseguita.

Dati per instabilità attorno a x

Numero rit.	Presente	Ascissa	Campata	βx/m	Vincolo a entrambi estremi	λx/m	λVer
1	Si	0					
			1-2	1	Si	29.5	Si, (<200)
2	Si	227.6					

Dati per instabilità attorno a y

Numero rit.	Presente	Ascissa	Campata	βy/n	k,LT	kw,LT	Vincolo a entrambi estremi
1	Si	0					
			1-2	1	Si	106.3	Si, (<200)
2	Si	227.6					

Verifica di stabilità per pressoflessione §C.4.2.4.1.3.3.1 NTC18

X	Comb.	Sfruttamento	Classe	NEd	MxEq,Ed	MyEq,Ed	Area	Wx	Wy	χ,min	λ adim. x/m	λ adim. y/n	N,crit x/m	N,crit y/n	Verifica
0	SLU 73	0.238	1	-6634.4	30467	0	32.19	227.8	51.9	0.422	0.34	1.224	764699.9	59081.4	Si

Verifica di stabilità per pressoflessione SLD §C.4.2.4.1.3.3.1 NTC18

X	Comb.	Sfruttamento	Classe	NEd	MxEq,Ed	MyEq,Ed	Area	Wx	Wy	χ,min	λ adim. x/m	λ adim. y/n	N,crit x/m	N,crit y/n	Verifica
0	SLD 11	0.043	1	-1447.1	1273	0	32.19	227.8	51.9	0.422	0.34	1.224	764699.9	59081.4	Si

Verifica di stabilità a taglio anima Y §4.2.4.1.2.4 [4.2.27] NTC18

η	hw	tw	hw/tw max	Verifica
1.2	17.2	0.9	55.46	Si

Verifica di stabilità a taglio anima Y SLD §4.2.4.1.2.4 [4.2.27] NTC18

η	hw	tw	hw/tw max	Verifica
1.2	17.2	0.9	55.46	Si

Verifiche a deformabilità

Mensola X: No; Mensola Y: No.

Frecce lungo X

Ascissa freccia	Combinazione	Freccia	Luce	L/f	L/f,min	Tipo	Verifica
220	SLE RA 1	0	227.6	10000	250	Totale	Si
151.7	SLE RA 31	0	227.6	10000	250	Totale	Si
220	SLE RA 30	0	227.6	10000	250	Totale	Si
151.7	SLE RA 29	0	227.6	10000	250	Totale	Si
220	SLE RA 28	0	227.6	10000	250	Totale	Si
151.7	SLE RA 2	0	227.6	10000	350	Variabile	Si
151.7	SLE RA 31	0	227.6	10000	350	Variabile	Si
212.4	SLE RA 30	0	227.6	10000	350	Variabile	Si
151.7	SLE RA 29	0	227.6	10000	350	Variabile	Si
182.1	SLE RA 28	0	227.6	10000	350	Variabile	Si

Frecce lungo Y

Ascissa freccia	Combinazione	Freccia	Luce	L/f	L/f,min	Tipo	Verifica
113.8	SLE RA 18	0.033	227.6	6841.6	250	Totale	Si
113.8	SLE RA 6	0.033	227.6	6841.6	250	Totale	Si
113.8	SLE RA 7	0.033	227.6	6841.6	250	Totale	Si
113.8	SLE RA 19	0.033	227.6	6841.6	250	Totale	Si
113.8	SLE RA 2	0.031	227.6	7267.4	250	Totale	Si
113.8	SLE RA 6	0.031	227.6	7297.9	350	Variabile	Si
113.8	SLE RA 7	0.031	227.6	7297.9	350	Variabile	Si
113.8	SLE RA 19	0.031	227.6	7297.9	350	Variabile	Si
113.8	SLE RA 18	0.031	227.6	7297.9	350	Variabile	Si
113.8	SLE RA 2	0.029	227.6	7784.4	350	Variabile	Si

Superelemento in acciaio composto dall'asta 274

Caratteristiche del materiale

Acciaio: S275, fyk = 2750

Caratteristiche geometriche

Lunghezza: 227.6

Nodo iniziale: 14 Nodo finale: 53
Cerniera iniziale: Svincolo: M2, M3 Cerniera finale: Svincolo: M2, M3
Sovraresistenza: 0% Sisma Z: No

Caratteristiche della sezione

Sezione	Rotazione	Area	Jx	Jy	ix	iy	Wx	Wy	Wplx	Wply
UPN200	0	32.19	1911.41	147.68	7.71	2.14	191.14	26.92	227.82	51.87

Verifiche di resistenza

Verifiche a forza assiale §4.2.4.1.2.1 - §4.2.4.1.2.2 NTC18

X	Comb.	Sfruttamento	Classe	NEd	Nc,Rd	Nt,Rd	Riduzione da taglio	ρx	ρy	Verifica
0	SLU 118	0.051	1	-4277.6	84315.5		1	0	0	Si

Verifiche a forza assiale SLD §4.2.4.1.2.1 - §4.2.4.1.2.2 NTC18

X	Comb.	Sfruttamento	Classe	NEd	Nc,Rd	Nt,Rd	Riduzione da taglio	ρx	ρy	Verifica
0	SLD 9	0.016	1	-1364.3	84315.5		1	0	0	Si

Verifica a taglio Y §4.2.4.1.2.4 NTC18

X	Comb.	Sfruttamento	VEd	Vc,Rd	Av	Interazione taglio-torsione	Riduzione torsione	Verifica
0	SLU 85	0.026	670.6	26035.8	17.24	Considerata	1	Si

Verifica a taglio Y SLD §4.2.4.1.2.4 NTC18

X	Comb.	Sfruttamento	VEd	Vc,Rd	Av	Interazione taglio-torsione	Riduzione torsione	Verifica
227.6	SLD 8	0.001	-25.8	26039.2	17.24	Considerata	1	Si

Verifica a torsione §4.2.4.1.2.5 NTC18

X	Comb.	Sfruttamento torsione	TEd	TRd	Riduzione taglio resistente	Sfruttamento taglio-torsione	τEd,totale	τRd	Verifica
0	SLV 8	0.009	120.2	14125.9	Considerata				Si

Verifica a torsione SLD §4.2.4.1.2.5 NTC18

X	Comb.	Sfruttamento torsione	TEd	TRd	Riduzione taglio resistente	Sfruttamento taglio-torsione	τEd,totale	τRd	Verifica
227.6	SLD 8	0.003	46.5	14125.9	Considerata				Si

Verifica a presso/tenso flessione retta X §§ 4.2.4.1.2.3 - 4.2.4.1.2.6 - 4.2.4.1.2.7 - 4.2.4.1.2.8 NTC18

Verifiche eseguite utilizzando la formula conservativa (6.2) §6.2.1 EN 1993-1-1:2005.

X	Comb.	Sfruttamento	Classe	NEd	NRd	Rid. NRd da VEd	Mx,Ed	Mx,Rd	Rid. Mx,Rd da VEd	Rid. Mx,Rd da NEd	ρx	ρy	Verifica
98.6	SLU 85	0.105	1	-3965.5	84315.5	1	-34665	596667	1		0	0	Si

Verifica a presso/tenso flessione retta X SLD §§ 4.2.4.1.2.3 - 4.2.4.1.2.6 - 4.2.4.1.2.7 - 4.2.4.1.2.8 NTC18

Verifiche eseguite utilizzando la formula conservativa (6.2) §6.2.1 EN 1993-1-1:2005.

X	Comb.	Sfruttamento	Classe	NEd	NRd	Rid. NRd da VEd	Mx,Ed	Mx,Rd	Rid. Mx,Rd da VEd	Rid. Mx,Rd da NEd	ρx	ρy	Verifica
113.8	SLD 10	0.018	1	-1351.7	84315.5	1	-1470	596667	1		0	0	Si

Verifiche ad instabilità

Caratteristiche iniziali

Membratura principale per controllo snellezza; Calcolo di snellezze ed N critici condotti secondo gli assi principali;
Curva X: c; Curva Y: c;
Svergolamento: Nessuno; la verifica a instabilità flesso-torsionale (svergolamento) non verrà eseguita.

Dati per instabilità attorno a x

Numero rit.	Presente	Ascissa	Campata	βx/m	Vincolo a entrambi estremi	λx/m	λVer
1	Si	0					
			1-2	1	Si	29.5	Si, (<200)
2	Si	227.6					

Dati per instabilità attorno a y

Numero rit.	Presente	Ascissa	Campata	βy/n	k,LT	kw,LT	Vincolo a entrambi estremi
1	Si	0					
			1-2	1	Si	106.3	Si, (<200)
2	Si	227.6					

Verifica di stabilità per pressoflessione §C.4.2.4.1.3.3.1 NTC18

X	Comb.	Sfruttamento	Classe	NEd	MxEq,Ed	MyEq,Ed	Area	Wx	Wy	χ,min	λ adim. x/m	λ adim. y/n	N,crit x/m	N,crit y/n	Verifica
0	SLU 85	0.171	1	-4277.6	-30467	0	32.19	227.8	51.9	0.422	0.34	1.224	764699.9	59081.4	Si

Verifica di stabilità per pressoflessione SLD §C.4.2.4.1.3.3.1 NTC18

X	Comb.	Sfruttamento	Classe	NEd	MxEq,Ed	MyEq,Ed	Area	Wx	Wy	χ,min	λ adim. x/m	λ adim. y/n	N,crit x/m	N,crit y/n	Verifica
0	SLD 9	0.04	1	-1364.3	-1273	0	32.19	227.8	51.9	0.422	0.34	1.224	764699.9	59081.4	Si

Verifica di stabilità a taglio anima Y §4.2.4.1.2.4 [4.2.27] NTC18

η	hw	tw	hw/tw max	Verifica
1.2	17.2	0.9	55.46	Si

Verifica di stabilità a taglio anima Y SLD §4.2.4.1.2.4 [4.2.27] NTC18

η	hw	tw	hw/tw max	Verifica
1.2	17.2	0.9	55.46	Si

Verifiche a deformabilità

Mensola X: No; Mensola Y: No.

Frecce lungo X

Ascissa freccia	Combinazione	Freccia	Luce	L/f	L/f,min	Tipo	Verifica
212.4	SLE RA 1	0	227.6	10000	250	Totale	Si
204.8	SLE RA 31	0	227.6	10000	250	Totale	Si
212.4	SLE RA 30	0	227.6	10000	250	Totale	Si
204.8	SLE RA 29	0	227.6	10000	250	Totale	Si
212.4	SLE RA 28	0	227.6	10000	250	Totale	Si
204.8	SLE RA 2	0	227.6	10000	350	Variabile	Si
204.8	SLE RA 31	0	227.6	10000	350	Variabile	Si
189.7	SLE RA 30	0	227.6	10000	350	Variabile	Si
204.8	SLE RA 29	0	227.6	10000	350	Variabile	Si
189.7	SLE RA 28	0	227.6	10000	350	Variabile	Si

Frecce lungo Y

Ascissa freccia	Combinazione	Freccia	Luce	L/f	L/f,min	Tipo	Verifica
113.8	SLE RA 18	-0.033	227.6	6841.6	250	Totale	Si
113.8	SLE RA 6	-0.033	227.6	6841.6	250	Totale	Si
113.8	SLE RA 7	-0.033	227.6	6841.6	250	Totale	Si
113.8	SLE RA 19	-0.033	227.6	6841.6	250	Totale	Si
113.8	SLE RA 2	-0.031	227.6	7267.4	250	Totale	Si
113.8	SLE RA 6	-0.031	227.6	7297.9	350	Variabile	Si
113.8	SLE RA 19	-0.031	227.6	7297.9	350	Variabile	Si
113.8	SLE RA 18	-0.031	227.6	7297.9	350	Variabile	Si
113.8	SLE RA 7	-0.031	227.6	7297.9	350	Variabile	Si
113.8	SLE RA 2	-0.029	227.6	7784.4	350	Variabile	Si

Superelemento in acciaio composto dall'asta 275

Caratteristiche del materiale

Acciaio: S275, fyk = 2750

Caratteristiche geometriche

Lunghezza: 227.6
Nodo iniziale: 14 Nodo finale: 45
Cerniera iniziale: Svincolo: M2, M3 Cerniera finale: Svincolo: M2, M3
Sovraresistenza: 0% Sisma Z: No

Caratteristiche della sezione

Sezione	Rotazione	Area	Jx	Jy	ix	iy	Wx	Wy	Wplx	Wply
UPN200	180	32.19	1911.41	147.68	7.71	2.14	191.14	26.92	227.82	51.87

Verifiche di resistenza

Verifiche a forza assiale §4.2.4.1.2.1 - §4.2.4.1.2.2 NTC18

X	Comb.	Sfruttamento	Classe	NEd	Nc,Rd	Nt,Rd	Riduzione da taglio	ρx	ρy	Verifica
0	SLU 85	0.066	1	-5605.9	84315.5		1	0	0	Si

Verifiche a forza assiale SLD §4.2.4.1.2.1 - §4.2.4.1.2.2 NTC18

X	Comb.	Sfruttamento	Classe	NEd	Nc,Rd	Nt,Rd	Riduzione da taglio	ρx	ρy	Verifica
0	SLD 11	0.017	1	-1431.6	84315.5		1	0	0	Si

Verifica a taglio Y §4.2.4.1.2.4 NTC18

X	Comb.	Sfruttamento	VEd	Vc,Rd	Av	Interazione taglio-torsione	Riduzione torsione	Verifica
0	SLU 118	0.026	-670.6	26032.8	17.24	Considerata	1	Si

Verifica a taglio Y SLD §4.2.4.1.2.4 NTC18

X	Comb.	Sfruttamento	VEd	Vc,Rd	Av	Interazione taglio-torsione	Riduzione torsione	Verifica
227.6	SLD 5	0.001	25.8	26039.2	17.24	Considerata	1	Si

Verifica a torsione §4.2.4.1.2.5 NTC18

X	Comb.	Sfruttamento torsione	TEd	TRd	Riduzione taglio resistente	Sfruttamento taglio-torsione	τEd,totale	τRd	Verifica
227.6	SLV 5	0.009	-120.1	14125.9	Considerata				Si

Verifica a torsione SLD §4.2.4.1.2.5 NTC18

X	Comb.	Sfruttamento torsione	TEd	TRd	Riduzione taglio resistente	Sfruttamento taglio-torsione	τEd,totale	τRd	Verifica
121.4	SLD 5	0.003	-46.6	14125.9	Considerata				Si

Verifica a presso/tenso flessione retta X §§ 4.2.4.1.2.3 - 4.2.4.1.2.6 - 4.2.4.1.2.7 - 4.2.4.1.2.8 NTC18

Verifiche eseguite utilizzando la formula conservativa (6.2) §6.2.1 EN 1993-1-1:2005.

X	Comb.	Sfruttamento	Classe	NEd	NRd	Rid. NRd da VEd	Mx,Ed	Mx,Rd	Rid. Mx,Rd da VEd	Rid. Mx,Rd da NEd	ρx	ρy	Verifica
98.6	SLU 118	0.121	1	-5293.8	84315.5	1	34665	596667	1		0	0	Si

Verifica a presso/tenso flessione retta X SLD §§ 4.2.4.1.2.3 - 4.2.4.1.2.6 - 4.2.4.1.2.7 - 4.2.4.1.2.8 NTC18

Verifiche eseguite utilizzando la formula conservativa (6.2) §6.2.1 EN 1993-1-1:2005.

X	Comb.	Sfruttamento	Classe	NEd	NRd	Rid. NRd da VEd	Mx,Ed	Mx,Rd	Rid. Mx,Rd da VEd	Rid. Mx,Rd da NEd	ρx	ρy	Verifica
113.8	SLD 12	0.019	1	-1419	84315.5	1	1470	596667	1		0	0	Si

Verifiche ad instabilità

Caratteristiche iniziali

Membratura principale per controllo snellezza; Calcolo di snellezze ed N critici condotti secondo gli assi principali;
Curva X: c; Curva Y: c;
Svergolamento: Nessuno; la verifica a instabilità flesso-torsionale (svergolamento) non verrà eseguita.

Dati per instabilità attorno a x

Numero rit.	Presente	Ascissa	Campata	βx/m	Vincolo a entrambi estremi	λx/m	λVer
1	Si	0					
			1-2	1	Si	29.5	Si, (<200)
2	Si	227.6					

Dati per instabilità attorno a y

Numero rit.	Presente	Ascissa	Campata	βy/n	k,LT	kw,LT	Vincolo a entrambi estremi
1	Si	0					
			1-2	1	Si	106.3	Si, (<200)
2	Si	227.6					

Verifica di stabilità per pressoflessione §C.4.2.4.1.3.3.1 NTC18

X	Comb.	Sfruttamento	Classe	NEd	MxEq,Ed	MyEq,Ed	Area	Wx	Wy	χ,min	λ adim. x/m	λ adim. y/n	N,crit x/m	N,crit y/n	Verifica
0	SLU 118	0.209	1	-5605.9	30467	0	32.19	227.8	51.9	0.422	0.34	1.224	764699.9	59081.4	Si

Verifica di stabilità per pressoflessione SLD §C.4.2.4.1.3.3.1 NTC18

X	Comb.	Sfruttamento	Classe	NEd	MxEq,Ed	MyEq,Ed	Area	Wx	Wy	χ,min	λ adim. x/m	λ adim. y/n	N,crit x/m	N,crit y/n	Verifica
0	SLD 11	0.042	1	-1431.6	1273	0	32.19	227.8	51.9	0.422	0.34	1.224	764699.9	59081.4	Si

Verifica di stabilità a taglio anima Y §4.2.4.1.2.4 [4.2.27] NTC18

η	hw	tw	hw/tw max	Verifica
1.2	17.2	0.9	55.46	Si

Verifica di stabilità a taglio anima Y SLD §4.2.4.1.2.4 [4.2.27] NTC18

η	hw	tw	hw/tw max	Verifica
1.2	17.2	0.9	55.46	Si

Verifiche a deformabilità

Mensola X: No; Mensola Y: No.

Frecce lungo X

Ascissa freccia	Combinazione	Freccia	Luce	L/f	L/f,min	Tipo	Verifica
204.8	SLE RA 1	0	227.6	10000	250	Totale	Si
159.3	SLE RA 31	0	227.6	10000	250	Totale	Si
204.8	SLE RA 30	0	227.6	10000	250	Totale	Si
129	SLE RA 29	0	227.6	10000	250	Totale	Si
204.8	SLE RA 28	0	227.6	10000	250	Totale	Si
129	SLE RA 2	0	227.6	10000	350	Variabile	Si
220	SLE RA 31	0	227.6	10000	350	Variabile	Si
220	SLE RA 30	0	227.6	10000	350	Variabile	Si
144.2	SLE RA 29	0	227.6	10000	350	Variabile	Si
144.2	SLE RA 28	0	227.6	10000	350	Variabile	Si

Frecce lungo Y

Ascissa freccia	Combinazione	Freccia	Luce	L/f	L/f,min	Tipo	Verifica
113.8	SLE RA 19	0.033	227.6	6841.6	250	Totale	Si
113.8	SLE RA 18	0.033	227.6	6841.6	250	Totale	Si
113.8	SLE RA 6	0.033	227.6	6841.6	250	Totale	Si
113.8	SLE RA 7	0.033	227.6	6841.6	250	Totale	Si
113.8	SLE RA 15	0.031	227.6	7267.4	250	Totale	Si
113.8	SLE RA 7	0.031	227.6	7297.9	350	Variabile	Si
113.8	SLE RA 19	0.031	227.6	7297.9	350	Variabile	Si
113.8	SLE RA 18	0.031	227.6	7297.9	350	Variabile	Si
113.8	SLE RA 6	0.031	227.6	7297.9	350	Variabile	Si
113.8	SLE RA 3	0.029	227.6	7784.4	350	Variabile	Si

Superelemento in acciaio composto dall'asta 276

Caratteristiche del materiale

Acciaio: S275, fyk = 2750

Caratteristiche geometriche

Lunghezza: 227.6
Nodo iniziale: 12 Nodo finale: 49
Cerniera iniziale: Svincolo: M2, M3 Cerniera finale: Svincolo: M2, M3
Sovraresistenza: 0% Sisma Z: No

Caratteristiche della sezione

Sezione	Rotazione	Area	Jx	Jy	ix	iy	Wx	Wy	Wplx	Wply
UPN200	0	32.19	1911.41	147.68	7.71	2.14	191.14	26.92	227.82	51.87

Verifiche di resistenza

Verifiche a forza assiale §4.2.4.1.2.1 - §4.2.4.1.2.2 NTC18

X	Comb.	Sfruttamento	Classe	NEd	Nc,Rd	Nt,Rd	Riduzione da taglio	ρx	ρy	Verifica
0	SLU 84	0.078	1	-6585.4	84315.5		1	0	0	Si

Verifiche a forza assiale SLD §4.2.4.1.2.1 - §4.2.4.1.2.2 NTC18

X	Comb.	Sfruttamento	Classe	NEd	Nc,Rd	Nt,Rd	Riduzione da taglio	ρx	ρy	Verifica
0	SLD 9	0.017	1	-1410.7	84315.5		1	0	0	Si

Verifica a taglio Y §4.2.4.1.2.4 NTC18

X	Comb.	Sfruttamento	VEd	Vc,Rd	Av	Interazione taglio-torsione	Riduzione torsione	Verifica
0	SLU 85	0.026	670.6	26035.8	17.24	Considerata	1	Si

Verifica a taglio Y SLD §4.2.4.1.2.4 NTC18

X	Comb.	Sfruttamento	VEd	Vc,Rd	Av	Interazione taglio-torsione	Riduzione torsione	Verifica
227.6	SLD 8	0.001	-25.8	26039.2	17.24	Considerata	1	Si

Verifica a torsione §4.2.4.1.2.5 NTC18

X	Comb.	Sfruttamento torsione	TEd	TRd	Riduzione taglio resistente	Sfruttamento taglio-torsione	τEd,totale	τRd	Verifica
0	SLV 8	0.009	120.1	14125.9	Considerata				Si

Verifica a torsione SLD §4.2.4.1.2.5 NTC18

X	Comb.	Sfruttamento torsione	TEd	TRd	Riduzione taglio resistente	Sfruttamento taglio-torsione	τEd,totale	τRd	Verifica
227.6	SLD 8	0.003	46.6	14125.9	Considerata				Si

Verifica a presso/tenso flessione retta X §§ 4.2.4.1.2.3 - 4.2.4.1.2.6 - 4.2.4.1.2.7 - 4.2.4.1.2.8 NTC18

Verifiche eseguite utilizzando la formula conservativa (6.2) §6.2.1 EN 1993-1-1:2005.

X	Comb.	Sfruttamento	Classe	NEd	NRd	Rid. NRd da VEd	Mx,Ed	Mx,Rd	Rid. Mx,Rd da VEd	Rid. Mx,Rd da NEd	ρx	ρy	Verifica
98.6	SLU 84	0.132	1	-6273.3	84315.5	1	-34665	596667	1		0	0	Si

Verifica a presso/tenso flessione retta X SLD §§ 4.2.4.1.2.3 - 4.2.4.1.2.6 - 4.2.4.1.2.7 - 4.2.4.1.2.8 NTC18

Verifiche eseguite utilizzando la formula conservativa (6.2) §6.2.1 EN 1993-1-1:2005.

X	Comb.	Sfruttamento	Classe	NEd	NRd	Rid. NRd da VEd	Mx,Ed	Mx,Rd	Rid. Mx,Rd da VEd	Rid. Mx,Rd da NEd	ρx	ρy	Verifica
113.8	SLD 9	0.019	1	-1398.1	84315.5	1	-1470	596667	1		0	0	Si

Verifiche ad instabilità

Caratteristiche iniziali

Membratura principale per controllo snellezza; Calcolo di snellezze ed N critici condotti secondo gli assi principali;
Curva X: c; Curva Y: c;
Svergolamento: Nessuno; la verifica a instabilità flesso-torsionale (svergolamento) non verrà eseguita.

Dati per instabilità attorno a x

Numero rit.	Presente	Ascissa	Campata	βx/m	Vincolo a entrambi estremi	λx/m	λVer
1	Si	0					
			1-2	1	Si	29.5	Si, (<200)
2	Si	227.6					

Dati per instabilità attorno a y

Numero rit.	Presente	Ascissa	Campata	βy/n	k,LT	kw,LT	Vincolo a entrambi estremi
1	Si	0					
			1-2	1	Si	106.3	Si, (<200)
2	Si	227.6					

Verifica di stabilità per pressoflessione §C.4.2.4.1.3.3.1 NTC18

X	Comb.	Sfruttamento	Classe	NEd	MxEq,Ed	MyEq,Ed	Area	Wx	Wy	χ,min	λ adim. x/m	λ adim. y/n	N,crit x/m	N,crit y/n	Verifica
0	SLU 84	0.236	1	-6585.4	-30467	0	32.19	227.8	51.9	0.422	0.34	1.224	764699.9	59081.4	Si

Verifica di stabilità per pressoflessione SLD §C.4.2.4.1.3.3.1 NTC18

X	Comb.	Sfruttamento	Classe	NEd	MxEq,Ed	MyEq,Ed	Area	Wx	Wy	χ,min	λ adim. x/m	λ adim. y/n	N,crit x/m	N,crit y/n	Verifica
0	SLD 9	0.042	1	-1410.7	-1273	0	32.19	227.8	51.9	0.422	0.34	1.224	764699.9	59081.4	Si

Verifica di stabilità a taglio anima Y §4.2.4.1.2.4 [4.2.27] NTC18

η	hw	tw	hw/tw max	Verifica
1.2	17.2	0.9	55.46	Si

Verifica di stabilità a taglio anima Y SLD §4.2.4.1.2.4 [4.2.27] NTC18

η	hw	tw	hw/tw max	Verifica
1.2	17.2	0.9	55.46	Si

Verifiche a deformabilità

Mensola X: No; Mensola Y: No.

Frecce lungo X

Ascissa freccia	Combinazione	Freccia	Luce	L/f	L/f,min	Tipo	Verifica
136.6	SLE RA 1	0	227.6	10000	250	Totale	Si
204.8	SLE RA 31	0	227.6	10000	250	Totale	Si
174.5	SLE RA 30	0	227.6	10000	250	Totale	Si
204.8	SLE RA 29	0	227.6	10000	250	Totale	Si
136.6	SLE RA 28	0	227.6	10000	250	Totale	Si
204.8	SLE RA 2	0	227.6	10000	350	Variabile	Si

Ascissa freccia	Combinazione	Freccia	Luce	L/f	L/f,min	Tipo	Verifica
204.8	SLE RA 31	0	227.6	10000	350	Variabile	Si
220	SLE RA 30	0	227.6	10000	350	Variabile	Si
204.8	SLE RA 29	0	227.6	10000	350	Variabile	Si
197.3	SLE RA 28	0	227.6	10000	350	Variabile	Si

Frecce lungo Y

Ascissa freccia	Combinazione	Freccia	Luce	L/f	L/f,min	Tipo	Verifica
113.8	SLE RA 6	-0.033	227.6	6841.6	250	Totale	Si
113.8	SLE RA 7	-0.033	227.6	6841.6	250	Totale	Si
113.8	SLE RA 19	-0.033	227.6	6841.6	250	Totale	Si
113.8	SLE RA 18	-0.033	227.6	6841.6	250	Totale	Si
113.8	SLE RA 2	-0.031	227.6	7267.4	250	Totale	Si
113.8	SLE RA 6	-0.031	227.6	7297.9	350	Variabile	Si
113.8	SLE RA 19	-0.031	227.6	7297.9	350	Variabile	Si
113.8	SLE RA 18	-0.031	227.6	7297.9	350	Variabile	Si
113.8	SLE RA 7	-0.031	227.6	7297.9	350	Variabile	Si
113.8	SLE RA 2	-0.029	227.6	7784.4	350	Variabile	Si

Superelemento in acciaio composto dall'asta 277

Caratteristiche del materiale

Acciaio: S275, fyk = 2750

Caratteristiche geometriche

Lunghezza: 227.6
Nodo iniziale: 12 Nodo finale: 41
Cerniera iniziale: Svincolo: M2, M3 Cerniera finale: Svincolo: M2, M3
Sovraresistenza: 0% Sisma Z: No

Caratteristiche della sezione

Sezione	Rotazione	Area	Jx	Jy	ix	iy	Wx	Wy	Wplx	Wply
UPN200	180	32.19	1911.41	147.68	7.71	2.14	191.14	26.92	227.82	51.87

Verifiche di resistenza

Verifiche a forza assiale §4.2.4.1.2.1 - §4.2.4.1.2.2 NTC18

X	Comb.	Sfruttamento	Classe	NEd	Nc,Rd	Nt,Rd	Riduzione da taglio	ρx	ρy	Verifica
0	SLU 85	0.051	1	-4311	84315.5		1	0	0	Si

Verifiche a forza assiale SLD §4.2.4.1.2.1 - §4.2.4.1.2.2 NTC18

X	Comb.	Sfruttamento	Classe	NEd	Nc,Rd	Nt,Rd	Riduzione da taglio	ρx	ρy	Verifica
0	SLD 11	0.017	1	-1410.7	84315.5		1	0	0	Si

Verifica a taglio Y §4.2.4.1.2.4 NTC18

X	Comb.	Sfruttamento	VEd	Vc,Rd	Av	Interazione taglio-torsione	Riduzione torsione	Verifica
0	SLU 97	0.009	-239.3	26048	17.24	Considerata	1	Si

Verifica a taglio Y SLD §4.2.4.1.2.4 NTC18

X	Comb.	Sfruttamento	VEd	Vc,Rd	Av	Interazione taglio-torsione	Riduzione torsione	Verifica
227.6	SLD 5	0.001	25.8	26039.2	17.24	Considerata	1	Si

Verifica a torsione §4.2.4.1.2.5 NTC18

X	Comb.	Sfruttamento torsione	TEd	TRd	Riduzione taglio resistente	Sfruttamento taglio-torsione	τEd,totale	τRd	Verifica
220	SLV 5	0.009	-120.1	14125.9	Considerata				Si

Verifica a torsione SLD §4.2.4.1.2.5 NTC18

X	Comb.	Sfruttamento torsione	TEd	TRd	Riduzione taglio resistente	Sfruttamento taglio-torsione	τEd,totale	τRd	Verifica
121.4	SLD 5	0.003	-46.6	14125.9	Considerata				Si

Verifica a presso/tenso flessione retta X §§ 4.2.4.1.2.3 - 4.2.4.1.2.6 - 4.2.4.1.2.7 - 4.2.4.1.2.8 NTC18

Verifiche eseguite utilizzando la formula conservativa (6.2) §6.2.1 EN 1993-1-1:2005.

X	Comb.	Sfruttamento	Classe	NEd	NRd	Rid. NRd da VEd	Mx,Ed	Mx,Rd	Rid. Mx,Rd da VEd	Rid. Mx,Rd da NEd	ρx	ρy	Verifica
98.6	SLU 99	0.065	1	-3687.2	84315.5	1	12465	596667	1		0	0	Si

Verifica a presso/tenso flessione retta X SLD §§ 4.2.4.1.2.3 - 4.2.4.1.2.6 - 4.2.4.1.2.7 - 4.2.4.1.2.8 NTC18

Verifiche eseguite utilizzando la formula conservativa (6.2) §6.2.1 EN 1993-1-1:2005.

X	Comb.	Sfruttamento	Classe	NEd	NRd	Rid. NRd da VEd	Mx,Ed	Mx,Rd	Rid. Mx,Rd da VEd	Rid. Mx,Rd da NEd	ρx	ρy	Verifica
113.8	SLD 11	0.019	1	-1398.1	84315.5	1	1470	596667	1		0	0	Si

Verifiche ad instabilità

Caratteristiche iniziali

Membratura principale per controllo snellezza; Calcolo di snellezze ed N critici condotti secondo gli assi principali;
Curva X: c; Curva Y: c;
Svergolamento: Nessuno; la verifica a instabilità flesso-torsionale (svergolamento) non verrà eseguita.

Dati per instabilità attorno a x

Numero rit.	Presente	Ascissa	Campata	βx/m	Vincolo a entrambi estremi	λx/m	λVer
1	Si	0					
			1-2	1	Si	29.5	Si, (<200)
2	Si	227.6					

Dati per instabilità attorno a y

Numero rit.	Presente	Ascissa	Campata	βy/n	k,LT	kw,LT	Vincolo a entrambi estremi
1	Si	0					
			1-2	1	Si	106.3	Si, (<200)
2	Si	227.6					

Verifica di stabilità per pressoflessione §C.4.2.4.1.3.3.1 NTC18

X	Comb.	Sfruttamento	Classe	NEd	MxEq,Ed	MyEq,Ed	Area	Wx	Wy	χ,min	λ adim. x/m	λ adim. y/n	N,crit x/m	N,crit y/n	Verifica
0	SLU 118	0.132	1	-4311	6457	0	32.19	227.8	51.9	0.422	0.34	1.224	764699.9	59081.4	Si

Verifica di stabilità per pressoflessione SLD §C.4.2.4.1.3.3.1 NTC18

X	Comb.	Sfruttamento	Classe	NEd	MxEq,Ed	MyEq,Ed	Area	Wx	Wy	χ,min	λ adim. x/m	λ adim. y/n	N,crit x/m	N,crit y/n	Verifica
0	SLD 11	0.042	1	-1410.7	1273	0	32.19	227.8	51.9	0.422	0.34	1.224	764699.9	59081.4	Si

Verifica di stabilità a taglio anima Y §4.2.4.1.2.4 [4.2.27] NTC18

η	hw	tw	hw/tw max	Verifica
1.2	17.2	0.9	55.46	Si

Verifica di stabilità a taglio anima Y SLD §4.2.4.1.2.4 [4.2.27] NTC18

η	hw	tw	hw/tw max	Verifica
1.2	17.2	0.9	55.46	Si

Verifiche a deformabilità

Mensola X: No; Mensola Y: No.

Frecce lungo X

Ascissa freccia	Combinazione	Freccia	Luce	L/f	L/f,min	Tipo	Verifica
136.6	SLE RA 1	0	227.6	10000	250	Totale	Si
189.7	SLE RA 31	0	227.6	10000	250	Totale	Si
174.5	SLE RA 30	0	227.6	10000	250	Totale	Si
189.7	SLE RA 29	0	227.6	10000	250	Totale	Si
136.6	SLE RA 28	0	227.6	10000	250	Totale	Si
189.7	SLE RA 2	0	227.6	10000	350	Variabile	Si
189.7	SLE RA 31	0	227.6	10000	350	Variabile	Si
204.8	SLE RA 30	0	227.6	10000	350	Variabile	Si
189.7	SLE RA 29	0	227.6	10000	350	Variabile	Si
204.8	SLE RA 28	0	227.6	10000	350	Variabile	Si

Frecce lungo Y

Ascissa freccia	Combinazione	Freccia	Luce	L/f	L/f,min	Tipo	Verifica
113.8	SLE RA 1	0.002	227.6	10000	250	Totale	Si
113.8	SLE RA 31	0.012	227.6	10000	250	Totale	Si
113.8	SLE RA 30	0.012	227.6	10000	250	Totale	Si
113.8	SLE RA 29	0.01	227.6	10000	250	Totale	Si
113.8	SLE RA 28	0.01	227.6	10000	250	Totale	Si
220	SLE RA 2	0	227.6	10000	350	Variabile	Si
113.8	SLE RA 31	0.01	227.6	10000	350	Variabile	Si
113.8	SLE RA 30	0.01	227.6	10000	350	Variabile	Si
113.8	SLE RA 29	0.008	227.6	10000	350	Variabile	Si
113.8	SLE RA 28	0.008	227.6	10000	350	Variabile	Si

Superelemento in acciaio composto dall'asta 278

Caratteristiche del materiale

Acciaio: S275, fyk = 2750

Caratteristiche geometriche

Lunghezza: 227.6
Nodo iniziale: 10 Nodo finale: 45
Cerniera iniziale: Svincolo: M2, M3 Cerniera finale: Svincolo: M2, M3
Sovraresistenza: 0% Sisma Z: No

Caratteristiche della sezione

Sezione	Rotazione	Area	Jx	Jy	ix	iy	Wx	Wy	Wplx	Wply
UPN200	0	32.19	1911.41	147.68	7.71	2.14	191.14	26.92	227.82	51.87

Verifiche di resistenza

Verifiche a forza assiale §4.2.4.1.2.1 - §4.2.4.1.2.2 NTC18

X	Comb.	Sfruttamento	Classe	NEd	Nc,Rd	Nt,Rd	Riduzione da taglio	ρx	ρy	Verifica
0	SLU 117	0.063	1	-5350	84315.5		1	0	0	Si

Verifiche a forza assiale SLD §4.2.4.1.2.1 - §4.2.4.1.2.2 NTC18

X	Comb.	Sfruttamento	Classe	NEd	Nc,Rd	Nt,Rd	Riduzione da taglio	ρx	ρy	Verifica
0	SLD 9	0.017	1	-1431.6	84315.5		1	0	0	Si

Verifica a taglio Y §4.2.4.1.2.4 NTC18

X	Comb.	Sfruttamento	VEd	Vc,Rd	Av	Interazione taglio-torsione	Riduzione torsione	Verifica
0	SLU 99	0.009	239.3	26050.8	17.24	Considerata	1	Si

Verifica a taglio Y SLD §4.2.4.1.2.4 NTC18

X	Comb.	Sfruttamento	VEd	Vc,Rd	Av	Interazione taglio-torsione	Riduzione torsione	Verifica
227.6	SLD 8	0.001	-25.8	26039.2	17.24	Considerata	1	Si

Verifica a torsione §4.2.4.1.2.5 NTC18

X	Comb.	Sfruttamento torsione	TEd	TRd	Riduzione taglio resistente	Sfruttamento taglio-torsione	τEd,totale	τRd	Verifica
220	SLV 8	0.009	120.1	14125.9	Considerata				Si

Verifica a torsione SLD §4.2.4.1.2.5 NTC18

X	Comb.	Sfruttamento torsione	TEd	TRd	Riduzione taglio resistente	Sfruttamento taglio-torsione	τEd,totale	τRd	Verifica
227.6	SLD 8	0.003	46.6	14125.9	Considerata				Si

Verifica a presso/tenso flessione retta X §§ 4.2.4.1.2.3 - 4.2.4.1.2.6 - 4.2.4.1.2.7 - 4.2.4.1.2.8 NTC18

Verifiche eseguite utilizzando la formula conservativa (6.2) §6.2.1 EN 1993-1-1:2005.

X	Comb.	Sfruttamento	Classe	NEd	NRd	Rid. NRd da VEd	Mx,Ed	Mx,Rd	Rid. Mx,Rd da VEd	Rid. Mx,Rd da NEd	ρx	ρy	Verifica
98.6	SLU 117	0.075	1	-5286.1	84315.5	1	-7342	596667	1		0	0	Si

Verifica a presso/tenso flessione retta X SLD §§ 4.2.4.1.2.3 - 4.2.4.1.2.6 - 4.2.4.1.2.7 - 4.2.4.1.2.8 NTC18

Verifiche eseguite utilizzando la formula conservativa (6.2) §6.2.1 EN 1993-1-1:2005.

X	Comb.	Sfruttamento	Classe	NEd	NRd	Rid. NRd da VEd	Mx,Ed	Mx,Rd	Rid. Mx,Rd da VEd	Rid. Mx,Rd da NEd	ρx	ρy	Verifica
113.8	SLD 9	0.019	1	-1419	84315.5	1	-1470	596667	1		0	0	Si

Verifiche ad instabilità

Caratteristiche iniziali

Membratura principale per controllo snellezza; Calcolo di snellezze ed N critici condotti secondo gli assi principali;
Curva X: c; Curva Y: c;
Svergolamento: Nessuno; la verifica a instabilità flesso-torsionale (svergolamento) non verrà eseguita.

Dati per instabilità attorno a x

Numero rit.	Presente	Ascissa	Campata	βx/m	Vincolo a entrambi estremi	λx/m	λVer
1	Si	0					
			1-2	1	Si	29.5	Si, (<200)
2	Si	227.6					

Dati per instabilità attorno a y

Numero rit.	Presente	Ascissa	Campata	βy/n	k,LT	kw,LT	Vincolo a entrambi estremi
1	Si	0					
			1-2	1	Si	106.3	Si, (<200)
2	Si	227.6					

Verifica di stabilità per pressoflessione §C.4.2.4.1.3.3.1 NTC18

X	Comb.	Sfruttamento	Classe	NEd	MxEq,Ed	MyEq,Ed	Area	Wx	Wy	χ,min	λ adim. x/m	λ adim. y/n	N,crit x/m	N,crit y/n	Verifica
0	SLU 117	0.161	1	-5350	-6457	0	32.19	227.8	51.9	0.422	0.34	1.224	764699.9	59081.4	Si

Verifica di stabilità per pressoflessione SLD §C.4.2.4.1.3.3.1 NTC18

X	Comb.	Sfruttamento	Classe	NEd	MxEq,Ed	MyEq,Ed	Area	Wx	Wy	χ,min	λ adim. x/m	λ adim. y/n	N,crit x/m	N,crit y/n	Verifica
0	SLD 9	0.042	1	-1431.6	-1273	0	32.19	227.8	51.9	0.422	0.34	1.224	764699.9	59081.4	Si

Verifica di stabilità a taglio anima Y §4.2.4.1.2.4 [4.2.27] NTC18

η	hw	tw	hw/tw max	Verifica
1.2	17.2	0.9	55.46	Si

Verifica di stabilità a taglio anima Y SLD §4.2.4.1.2.4 [4.2.27] NTC18

η	hw	tw	hw/tw max	Verifica
1.2	17.2	0.9	55.46	Si

Verifiche a deformabilità

Mensola X: No; Mensola Y: No.

Frecce lungo X

Ascissa freccia	Combinazione	Freccia	Luce	L/f	L/f,min	Tipo	Verifica
204.8	SLE RA 1	0	227.6	10000	250	Totale	Si
204.8	SLE RA 31	0	227.6	10000	250	Totale	Si
204.8	SLE RA 30	0	227.6	10000	250	Totale	Si
204.8	SLE RA 29	0	227.6	10000	250	Totale	Si
204.8	SLE RA 28	0	227.6	10000	250	Totale	Si
220	SLE RA 2	0	227.6	10000	350	Variabile	Si
204.8	SLE RA 31	0	227.6	10000	350	Variabile	Si
182.1	SLE RA 30	0	227.6	10000	350	Variabile	Si
204.8	SLE RA 29	0	227.6	10000	350	Variabile	Si
182.1	SLE RA 28	0	227.6	10000	350	Variabile	Si

Frecce lungo Y

Ascissa freccia	Combinazione	Freccia	Luce	L/f	L/f,min	Tipo	Verifica
113.8	SLE RA 1	-0.002	227.6	10000	250	Totale	Si
113.8	SLE RA 31	-0.012	227.6	10000	250	Totale	Si
113.8	SLE RA 30	-0.012	227.6	10000	250	Totale	Si
113.8	SLE RA 29	-0.01	227.6	10000	250	Totale	Si

Ascissa freccia	Combinazione	Freccia	Luce	L/f	L/f,min	Tipo	Verifica
113.8	SLE RA 28	-0.01	227.6	10000	250	Totale	Si
204.8	SLE RA 2	0	227.6	10000	350	Variabile	Si
113.8	SLE RA 31	-0.01	227.6	10000	350	Variabile	Si
113.8	SLE RA 30	-0.01	227.6	10000	350	Variabile	Si
113.8	SLE RA 29	-0.008	227.6	10000	350	Variabile	Si
113.8	SLE RA 28	-0.008	227.6	10000	350	Variabile	Si

Superelemento in acciaio composto dall'asta 279

Caratteristiche del materiale

Acciaio: S275, fyk = 2750

Caratteristiche geometriche

Lunghezza: 227.6
Nodo iniziale: 10 Nodo finale: 37
Cerniera iniziale: Svincolo: M2, M3 Cerniera finale: Svincolo: M2, M3
Sovraresistenza: 0% Sisma Z: No

Caratteristiche della sezione

Sezione	Rotazione	Area	Jx	Jy	ix	iy	Wx	Wy	Wplx	Wply
UPN200	180	32.19	1911.41	147.68	7.71	2.14	191.14	26.92	227.82	51.87

Verifiche di resistenza

Verifiche a forza assiale §4.2.4.1.2.1 - §4.2.4.1.2.2 NTC18

X	Comb.	Sfruttamento	Classe	NEd	Nc,Rd	Nt,Rd	Riduzione da taglio	ρx	ρy	Verifica
0	SLU 85	0.035	1	-2982.4	84315.5		1	0	0	Si

Verifiche a forza assiale SLD §4.2.4.1.2.1 - §4.2.4.1.2.2 NTC18

X	Comb.	Sfruttamento	Classe	NEd	Nc,Rd	Nt,Rd	Riduzione da taglio	ρx	ρy	Verifica
0	SLD 11	0.016	1	-1364.3	84315.5		1	0	0	Si

Verifica a taglio Y §4.2.4.1.2.4 NTC18

X	Comb.	Sfruttamento	VEd	Vc,Rd	Av	Interazione taglio-torsione	Riduzione torsione	Verifica
0	SLU 130	0.009	-239.3	26054.7	17.24	Considerata	1	Si

Verifica a taglio Y SLD §4.2.4.1.2.4 NTC18

X	Comb.	Sfruttamento	VEd	Vc,Rd	Av	Interazione taglio-torsione	Riduzione torsione	Verifica
227.6	SLD 5	0.001	25.8	26039.2	17.24	Considerata	1	Si

Verifica a torsione §4.2.4.1.2.5 NTC18

X	Comb.	Sfruttamento torsione	TEd	TRd	Riduzione taglio resistente	Sfruttamento taglio-torsione	τEd,totale	τRd	Verifica
220	SLV 5	0.009	-120.2	14125.9	Considerata				Si

Verifica a torsione SLD §4.2.4.1.2.5 NTC18

X	Comb.	Sfruttamento torsione	TEd	TRd	Riduzione taglio resistente	Sfruttamento taglio-torsione	τEd,totale	τRd	Verifica
121.4	SLD 5	0.003	-46.5	14125.9	Considerata				Si

Verifica a presso/tenso flessione retta X §§ 4.2.4.1.2.3 - 4.2.4.1.2.6 - 4.2.4.1.2.7 - 4.2.4.1.2.8 NTC18

Verifiche eseguite utilizzando la formula conservativa (6.2) §6.2.1 EN 1993-1-1:2005.

X	Comb.	Sfruttamento	Classe	NEd	NRd	Rid. NRd da VEd	Mx,Ed	Mx,Rd	Rid. Mx,Rd da VEd	Rid. Mx,Rd da NEd	ρx	ρy	Verifica
98.6	SLU 99	0.053	1	-2688.9	84315.5	1	12465	596667	1		0	0	Si

Verifica a presso/tenso flessione retta X SLD §§ 4.2.4.1.2.3 - 4.2.4.1.2.6 - 4.2.4.1.2.7 - 4.2.4.1.2.8 NTC18

Verifiche eseguite utilizzando la formula conservativa (6.2) §6.2.1 EN 1993-1-1:2005.

X	Comb.	Sfruttamento	Classe	NEd	NRd	Rid. NRd da VEd	Mx,Ed	Mx,Rd	Rid. Mx,Rd da VEd	Rid. Mx,Rd da NEd	ρx	ρy	Verifica
113.8	SLD 11	0.018	1	-1351.7	84315.5	1	1470	596667	1		0	0	Si

Verifiche ad instabilità

Caratteristiche iniziali

Membratura principale per controllo snellezza; Calcolo di snellezze ed N critici condotti secondo gli assi principali;
Curva X: c; Curva Y: c;
Svergolamento: Nessuno; la verifica a instabilità flesso-torsionale (svergolamento) non verrà eseguita.

Dati per instabilità attorno a x

Numero rit.	Presente	Ascissa	Campata	βx/m	Vincolo a entrambi estremi	λx/m	λVer
1	Si	0					
			1-2	1	Si	29.5	Si, (<200)
2	Si	227.6					

Dati per instabilità attorno a y

Numero rit.	Presente	Ascissa	Campata	βy/n	k,LT	kw,LT	Vincolo a entrambi estremi
1	Si	0					
			1-2	1	Si	106.3	Si, (<200)

Numero rit.	Presente	Ascissa	Campata	βy/n	k,LT	kw,LT	Vincolo a entrambi estremi
2	Si	227.6					

Verifica di stabilità per pressoflessione §C.4.2.4.1.3.3.1 NTC18

X	Comb.	Sfruttamento	Classe	NEd	MxEq,Ed	MyEq,Ed	Area	Wx	Wy	χ,min	λ adim. x/m	λ adim. y/n	N,crit x/m	N,crit y/n	Verifica
0	SLU 99	0.097	1	-2799.3	10959	0	32.19	227.8	51.9	0.422	0.34	1.224	764699.9	59081.4	Si

Verifica di stabilità per pressoflessione SLD §C.4.2.4.1.3.3.1 NTC18

X	Comb.	Sfruttamento	Classe	NEd	MxEq,Ed	MyEq,Ed	Area	Wx	Wy	χ,min	λ adim. x/m	λ adim. y/n	N,crit x/m	N,crit y/n	Verifica
0	SLD 11	0.04	1	-1364.3	1273	0	32.19	227.8	51.9	0.422	0.34	1.224	764699.9	59081.4	Si

Verifica di stabilità a taglio anima Y §4.2.4.1.2.4 [4.2.27] NTC18

η	hw	tw	hw/tw max	Verifica
1.2	17.2	0.9	55.46	Si

Verifica di stabilità a taglio anima Y SLD §4.2.4.1.2.4 [4.2.27] NTC18

η	hw	tw	hw/tw max	Verifica
1.2	17.2	0.9	55.46	Si

Verifiche a deformabilità

Mensola X: No; Mensola Y: No.

Frecce lungo X

Ascissa freccia	Combinazione	Freccia	Luce	L/f	L/f,min	Tipo	Verifica
212.4	SLE RA 1	0	227.6	10000	250	Totale	Si
129	SLE RA 31	0	227.6	10000	250	Totale	Si
212.4	SLE RA 30	0	227.6	10000	250	Totale	Si
129	SLE RA 29	0	227.6	10000	250	Totale	Si
212.4	SLE RA 28	0	227.6	10000	250	Totale	Si
166.9	SLE RA 2	0	227.6	10000	350	Variabile	Si
220	SLE RA 31	0	227.6	10000	350	Variabile	Si
159.3	SLE RA 30	0	227.6	10000	350	Variabile	Si
189.7	SLE RA 29	0	227.6	10000	350	Variabile	Si
159.3	SLE RA 28	0	227.6	10000	350	Variabile	Si

Frecce lungo Y

Ascissa freccia	Combinazione	Freccia	Luce	L/f	L/f,min	Tipo	Verifica
113.8	SLE RA 1	0.002	227.6	10000	250	Totale	Si
113.8	SLE RA 31	0.012	227.6	10000	250	Totale	Si
113.8	SLE RA 30	0.012	227.6	10000	250	Totale	Si
113.8	SLE RA 29	0.01	227.6	10000	250	Totale	Si
113.8	SLE RA 28	0.01	227.6	10000	250	Totale	Si
189.7	SLE RA 2	0	227.6	10000	350	Variabile	Si
113.8	SLE RA 31	0.01	227.6	10000	350	Variabile	Si
113.8	SLE RA 30	0.01	227.6	10000	350	Variabile	Si
113.8	SLE RA 29	0.008	227.6	10000	350	Variabile	Si
113.8	SLE RA 28	0.008	227.6	10000	350	Variabile	Si

Superelemento in acciaio composto dall'asta 280

Caratteristiche del materiale

Acciaio: S275, fyk = 2750

Caratteristiche geometriche

Lunghezza: 227.6
Nodo iniziale: 8 Nodo finale: 41
Cerniera iniziale: Svincolo: M2, M3 Cerniera finale: Svincolo: M2, M3
Sovraresistenza: 0% Sisma Z: No

Caratteristiche della sezione

Sezione	Rotazione	Area	Jx	Jy	ix	iy	Wx	Wy	Wplx	Wply
UPN200	0	32.19	1911.41	147.68	7.71	2.14	191.14	26.92	227.82	51.87

Verifiche di resistenza

Verifiche a forza assiale §4.2.4.1.2.1 - §4.2.4.1.2.2 NTC18

X	Comb.	Sfruttamento	Classe	NEd	Nc,Rd	Nt,Rd	Riduzione da taglio	ρx	ρy	Verifica
0	SLU 84	0.052	1	-4369.3	84315.5		1	0	0	Si

Verifiche a forza assiale SLD §4.2.4.1.2.1 - §4.2.4.1.2.2 NTC18

X	Comb.	Sfruttamento	Classe	NEd	Nc,Rd	Nt,Rd	Riduzione da taglio	ρx	ρy	Verifica
0	SLD 9	0.017	1	-1447.1	84315.5		1	0	0	Si

Verifica a taglio Y §4.2.4.1.2.4 NTC18

X	Comb.	Sfruttamento	VEd	Vc,Rd	Av	Interazione taglio-torsione	Riduzione torsione	Verifica
0	SLU 132	0.009	239.3	26060.2	17.24	Considerata	1	Si

Verifica a taglio Y SLD §4.2.4.1.2.4 NTC18

X	Comb.	Sfruttamento	VEd	Vc,Rd	Av	Interazione taglio-torsione	Riduzione torsione	Verifica
227.6	SLD 8	0.001	-25.8	26039.4	17.24	Considerata	1	Si

Verifica a torsione §4.2.4.1.2.5 NTC18

X	Comb.	Sfruttamento torsione	TEd	TRd	Riduzione taglio resistente	Sfruttamento taglio-torsione	τEd,totale	τRd	Verifica
212.4	SLV 7	0.008	119.9	14125.9	Considerata				Si

Verifica a torsione SLD §4.2.4.1.2.5 NTC18

X	Comb.	Sfruttamento torsione	TEd	TRd	Riduzione taglio resistente	Sfruttamento taglio-torsione	τEd,totale	τRd	Verifica
227.6	SLD 8	0.003	46.3	14125.9	Considerata				Si

Verifica a presso/tenso flessione retta X §§ 4.2.4.1.2.3 - 4.2.4.1.2.6 - 4.2.4.1.2.7 - 4.2.4.1.2.8 NTC18

Verifiche eseguite utilizzando la formula conservativa (6.2) §6.2.1 EN 1993-1-1:2005.

X	Comb.	Sfruttamento	Classe	NEd	NRd	Rid. NRd da VEd	Mx,Ed	Mx,Rd	Rid. Mx,Rd da VEd	Rid. Mx,Rd da NEd	ρx	ρy	Verifica
98.6	SLU 130	0.065	1	-3759.2	84315.5	1	-12465	596667	1		0	0	Si

Verifica a presso/tenso flessione retta X SLD §§ 4.2.4.1.2.3 - 4.2.4.1.2.6 - 4.2.4.1.2.7 - 4.2.4.1.2.8 NTC18

Verifiche eseguite utilizzando la formula conservativa (6.2) §6.2.1 EN 1993-1-1:2005.

X	Comb.	Sfruttamento	Classe	NEd	NRd	Rid. NRd da VEd	Mx,Ed	Mx,Rd	Rid. Mx,Rd da VEd	Rid. Mx,Rd da NEd	ρx	ρy	Verifica
113.8	SLD 9	0.019	1	-1434.5	84315.5	1	-1470	596667	1		0	0	Si

Verifiche ad instabilità

Caratteristiche iniziali

Membratura principale per controllo snellezza; Calcolo di snellezze ed N critici condotti secondo gli assi principali;
Curva X: c; Curva Y: c;
Svergolamento: Nessuno; la verifica a instabilità flesso-torsionale (svergolamento) non verrà eseguita.

Dati per instabilità attorno a x

Numero rit.	Presente	Ascissa	Campata	βx/m	Vincolo a entrambi estremi	λx/m	λVer
1	Si	0					
			1-2	1	Si	29.5	Si, (<200)
2	Si	227.6					

Dati per instabilità attorno a y

Numero rit.	Presente	Ascissa	Campata	βy/n	k,LT	kw,LT	Vincolo a entrambi estremi
1	Si	0					
			1-2	1	Si	106.3	Si, (<200)
2	Si	227.6					

Verifica di stabilità per pressoflessione §C.4.2.4.1.3.3.1 NTC18

X	Comb.	Sfruttamento	Classe	NEd	MxEq,Ed	MyEq,Ed	Area	Wx	Wy	χ,min	λ adim. x/m	λ adim. y/n	N,crit x/m	N,crit y/n	Verifica
0	SLU 84	0.134	1	-4369.3	-6457	0	32.19	227.8	51.9	0.422	0.34	1.224	764699.9	59081.4	Si

Verifica di stabilità per pressoflessione SLD §C.4.2.4.1.3.3.1 NTC18

X	Comb.	Sfruttamento	Classe	NEd	MxEq,Ed	MyEq,Ed	Area	Wx	Wy	χ,min	λ adim. x/m	λ adim. y/n	N,crit x/m	N,crit y/n	Verifica
0	SLD 9	0.043	1	-1447.1	-1273	0	32.19	227.8	51.9	0.422	0.34	1.224	764699.9	59081.4	Si

Verifica di stabilità a taglio anima Y §4.2.4.1.2.4 [4.2.27] NTC18

η	hw	tw	hw/tw max	Verifica
1.2	17.2	0.9	55.46	Si

Verifica di stabilità a taglio anima Y SLD §4.2.4.1.2.4 [4.2.27] NTC18

η	hw	tw	hw/tw max	Verifica
1.2	17.2	0.9	55.46	Si

Verifiche a deformabilità

Mensola X: No; Mensola Y: No.

Frecce lungo X

Ascissa freccia	Combinazione	Freccia	Luce	L/f	L/f,min	Tipo	Verifica
220	SLE RA 1	0	227.6	10000	250	Totale	Si
174.5	SLE RA 31	0	227.6	10000	250	Totale	Si
189.7	SLE RA 30	0	227.6	10000	250	Totale	Si
174.5	SLE RA 29	0	227.6	10000	250	Totale	Si
220	SLE RA 28	0	227.6	10000	250	Totale	Si
212.4	SLE RA 2	0	227.6	10000	350	Variabile	Si
174.5	SLE RA 31	0	227.6	10000	350	Variabile	Si
220	SLE RA 30	0	227.6	10000	350	Variabile	Si
212.4	SLE RA 29	0	227.6	10000	350	Variabile	Si
220	SLE RA 28	0	227.6	10000	350	Variabile	Si

Frecce lungo Y

Ascissa freccia	Combinazione	Freccia	Luce	L/f	L/f,min	Tipo	Verifica
113.8	SLE RA 1	-0.002	227.6	10000	250	Totale	Si
113.8	SLE RA 31	-0.012	227.6	10000	250	Totale	Si
113.8	SLE RA 30	-0.012	227.6	10000	250	Totale	Si
113.8	SLE RA 29	-0.01	227.6	10000	250	Totale	Si
113.8	SLE RA 28	-0.01	227.6	10000	250	Totale	Si
212.4	SLE RA 2	0	227.6	10000	350	Variabile	Si
113.8	SLE RA 31	-0.01	227.6	10000	350	Variabile	Si
113.8	SLE RA 30	-0.01	227.6	10000	350	Variabile	Si
113.8	SLE RA 29	-0.008	227.6	10000	350	Variabile	Si
113.8	SLE RA 28	-0.008	227.6	10000	350	Variabile	Si

Superelemento in acciaio composto dall'asta 281

Caratteristiche del materiale

Acciaio: S275, fyk = 2750

Caratteristiche geometriche

Lunghezza: 227.6
Nodo iniziale: 8 Nodo finale: 33
Cerniera iniziale: Svincolo: M2, M3 Cerniera finale: Svincolo: M2, M3
Sovraresistenza: 0% Sisma Z: No

Caratteristiche della sezione

Sezione	Rotazione	Area	Jx	Jy	ix	iy	Wx	Wy	Wplx	Wply
UPN200	180	32.19	1911.41	147.68	7.71	2.14	191.14	26.92	227.82	51.87

Verifiche di resistenza

Verifiche a forza assiale §4.2.4.1.2.1 - §4.2.4.1.2.2 NTC18

X	Comb.	Sfruttamento	Classe	NEd	Nc,Rd	Nt,Rd	Riduzione da taglio	ρx	ρy	Verifica
0	SLU 98	0.053	1	-4446.4	84315.5		1	0	0	Si

Verifiche a forza assiale SLD §4.2.4.1.2.1 - §4.2.4.1.2.2 NTC18

X	Comb.	Sfruttamento	Classe	NEd	Nc,Rd	Nt,Rd	Riduzione da taglio	ρx	ρy	Verifica
0	SLD 11	0.028	1	-2351.7	84315.5		1	0	0	Si

Verifica a taglio Y §4.2.4.1.2.4 NTC18

X	Comb.	Sfruttamento	VEd	Vc,Rd	Av	Interazione taglio-torsione	Riduzione torsione	Verifica
0	SLU 98	0.009	-239.4	26059.5	17.24	Considerata	1	Si

Verifica a taglio Y SLD §4.2.4.1.2.4 NTC18

X	Comb.	Sfruttamento	VEd	Vc,Rd	Av	Interazione taglio-torsione	Riduzione torsione	Verifica
227.6	SLD 8	0.001	25.8	26029.8	17.24	Considerata	1	Si

Verifica a torsione §4.2.4.1.2.5 NTC18

X	Comb.	Sfruttamento torsione	TEd	TRd	Riduzione taglio resistente	Sfruttamento taglio-torsione	τEd,totale	τRd	Verifica
0	SLV 7	0.01	141.4	14125.9	Considerata				Si

Verifica a torsione SLD §4.2.4.1.2.5 NTC18

X	Comb.	Sfruttamento torsione	TEd	TRd	Riduzione taglio resistente	Sfruttamento taglio-torsione	τEd,totale	τRd	Verifica
227.6	SLD 7	0.004	59.2	14125.9	Considerata				Si

Verifica a presso/tenso flessione retta X §§ 4.2.4.1.2.3 - 4.2.4.1.2.6 - 4.2.4.1.2.7 - 4.2.4.1.2.8 NTC18

Verifiche eseguite utilizzando la formula conservativa (6.2) §6.2.1 EN 1993-1-1:2005.

X	Comb.	Sfruttamento	Classe	NEd	NRd	Rid. NRd da VEd	Mx,Ed	Mx,Rd	Rid. Mx,Rd da VEd	Rid. Mx,Rd da NEd	ρx	ρy	Verifica
98.6	SLU 98	0.072	1	-4336.1	84315.5	1	12501	596667	1		0	0	Si

Verifica a presso/tenso flessione retta X SLD §§ 4.2.4.1.2.3 - 4.2.4.1.2.6 - 4.2.4.1.2.7 - 4.2.4.1.2.8 NTC18

Verifiche eseguite utilizzando la formula conservativa (6.2) §6.2.1 EN 1993-1-1:2005.

X	Comb.	Sfruttamento	Classe	NEd	NRd	Rid. NRd da VEd	Mx,Ed	Mx,Rd	Rid. Mx,Rd da VEd	Rid. Mx,Rd da NEd	ρx	ρy	Verifica
113.8	SLD 12	0.03	1	-2339.1	84315.5	1	1470	596667	1		0	0	Si

Verifiche ad instabilità

Caratteristiche iniziali

Membratura principale per controllo snellezza; Calcolo di snellezze ed N critici condotti secondo gli assi principali;
Curva X: c; Curva Y: c;
Svergolamento: Nessuno; la verifica a instabilità flesso-torsionale (svergolamento) non verrà eseguita.

Dati per instabilità attorno a x

Numero rit.	Presente	Ascissa	Campata	βx/m	Vincolo a entrambi estremi	λx/m	λVer
1	Si	0					
			1-2	1	Si	29.5	Si, (<200)
2	Si	227.6					

Dati per instabilità attorno a y

Numero rit.	Presente	Ascissa	Campata	βy/n	k,LT	kw,LT	Vincolo a entrambi estremi
1	Si	0					
			1-2	1	Si	106.3	Si, (<200)
2	Si	227.6					

Verifica di stabilità per pressoflessione §C.4.2.4.1.3.3.1 NTC18

X	Comb.	Sfruttamento	Classe	NEd	MxEq,Ed	MyEq,Ed	Area	Wx	Wy	χ,min	λ adim. x/m	λ adim. y/n	N,crit x/m	N,crit y/n	Verifica
0	SLU 98	0.143	1	-4446.4	10979	0	32.19	227.8	51.9	0.422	0.34	1.224	764699.9	59081.4	Si

Verifica di stabilità per pressoflessione SLD §C.4.2.4.1.3.3.1 NTC18

X	Comb.	Sfruttamento	Classe	NEd	MxEq,Ed	MyEq,Ed	Area	Wx	Wy	χ,min	λ adim. x/m	λ adim. y/n	N,crit x/m	N,crit y/n	Verifica
0	SLD 11	0.068	1	-2351.7	1273	0	32.19	227.8	51.9	0.422	0.34	1.224	764699.9	59081.4	Si

Verifica di stabilità a taglio anima Y §4.2.4.1.2.4 [4.2.27] NTC18

η	hw	tw	hw/tw max	Verifica
1.2	17.2	0.9	55.46	Si

Verifica di stabilità a taglio anima Y SLD §4.2.4.1.2.4 [4.2.27] NTC18

η	hw	tw	hw/tw max	Verifica
1.2	17.2	0.9	55.46	Si

Verifiche a deformabilità

Mensola X: No; Mensola Y: No.

Frecce lungo X

Ascissa freccia	Combinazione	Freccia	Luce	L/f	L/f,min	Tipo	Verifica
166.9	SLE RA 1	0	227.6	10000	250	Totale	Si
166.9	SLE RA 31	0	227.6	10000	250	Totale	Si
166.9	SLE RA 30	0	227.6	10000	250	Totale	Si
166.9	SLE RA 29	0	227.6	10000	250	Totale	Si
166.9	SLE RA 28	0	227.6	10000	250	Totale	Si
212.4	SLE RA 2	0	227.6	10000	350	Variabile	Si
151.7	SLE RA 31	0	227.6	10000	350	Variabile	Si
151.7	SLE RA 30	0	227.6	10000	350	Variabile	Si
151.7	SLE RA 29	0	227.6	10000	350	Variabile	Si
151.7	SLE RA 28	0	227.6	10000	350	Variabile	Si

Frecce lungo Y

Ascissa freccia	Combinazione	Freccia	Luce	L/f	L/f,min	Tipo	Verifica
113.8	SLE RA 1	0.002	227.6	10000	250	Totale	Si
113.8	SLE RA 31	0.012	227.6	10000	250	Totale	Si
113.8	SLE RA 30	0.012	227.6	10000	250	Totale	Si
113.8	SLE RA 29	0.01	227.6	10000	250	Totale	Si
113.8	SLE RA 28	0.01	227.6	10000	250	Totale	Si
121.4	SLE RA 2	0	227.6	10000	350	Variabile	Si
113.8	SLE RA 31	0.01	227.6	10000	350	Variabile	Si
113.8	SLE RA 30	0.01	227.6	10000	350	Variabile	Si
113.8	SLE RA 29	0.008	227.6	10000	350	Variabile	Si
113.8	SLE RA 28	0.008	227.6	10000	350	Variabile	Si

Superelemento in acciaio composto dall'asta 282

Caratteristiche del materiale

Acciaio: S275, fyk = 2750

Caratteristiche geometriche

Lunghezza: 227.6
Nodo iniziale: 6 Nodo finale: 37
Cerniera iniziale: Svincolo: M2, M3 Cerniera finale: Svincolo: M2, M3
Sovraresistenza: 0% Sisma Z: No

Caratteristiche della sezione

Sezione	Rotazione	Area	Jx	Jy	ix	iy	Wx	Wy	Wplx	Wply
UPN200	0	32.19	1911.41	147.68	7.71	2.14	191.14	26.92	227.82	51.87

Verifiche di resistenza

Verifiche a forza assiale §4.2.4.1.2.1 - §4.2.4.1.2.2 NTC18

X	Comb.	Sfruttamento	Classe	NEd	Nc,Rd	Nt,Rd	Riduzione da taglio	ρx	ρy	Verifica
0	SLU 117	0.037	1	-3134.2	84315.5		1	0	0	Si

Verifiche a forza assiale SLD §4.2.4.1.2.1 - §4.2.4.1.2.2 NTC18

X	Comb.	Sfruttamento	Classe	NEd	Nc,Rd	Nt,Rd	Riduzione da taglio	ρx	ρy	Verifica
0	SLD 9	0.017	1	-1462	84315.5		1	0	0	Si

Verifica a taglio Y §4.2.4.1.2.4 NTC18

X	Comb.	Sfruttamento	VEd	Vc,Rd	Av	Interazione taglio-torsione	Riduzione torsione	Verifica
0	SLU 99	0.009	239.4	26060.5	17.24	Considerata	1	Si

Verifica a taglio Y SLD §4.2.4.1.2.4 NTC18

X	Comb.	Sfruttamento	VEd	Vc,Rd	Av	Interazione taglio-torsione	Riduzione torsione	Verifica
227.6	SLD 8	0.001	-25.8	26037.7	17.24	Considerata	1	Si

Verifica a torsione §4.2.4.1.2.5 NTC18

X	Comb.	Sfruttamento torsione	TEd	TRd	Riduzione taglio resistente	Sfruttamento taglio-torsione	τEd,totale	τRd	Verifica
220	SLV 8	0.009	121.1	14125.9	Considerata				Si

Verifica a torsione SLD §4.2.4.1.2.5 NTC18

X	Comb.	Sfruttamento torsione	TEd	TRd	Riduzione taglio resistente	Sfruttamento taglio-torsione	τEd,totale	τRd	Verifica
227.6	SLD 8	0.003	48.5	14125.9	Considerata				Si

Verifica a presso/tenso flessione retta X §§ 4.2.4.1.2.3 - 4.2.4.1.2.6 - 4.2.4.1.2.7 - 4.2.4.1.2.8 NTC18

Verifiche eseguite utilizzando la formula conservativa (6.2) §6.2.1 EN 1993-1-1:2005.

X	Comb.	Sfruttamento	Classe	NEd	NRd	Rid. NRd da VEd	Mx,Ed	Mx,Rd	Rid. Mx,Rd da VEd	Rid. Mx,Rd da NEd	ρx	ρy	Verifica
98.6	SLU 130	0.055	1	-2872.2	84315.5	1	-12508	596667	1		0	0	Si

Verifica a presso/tenso flessione retta X SLD §§ 4.2.4.1.2.3 - 4.2.4.1.2.6 - 4.2.4.1.2.7 - 4.2.4.1.2.8 NTC18

Verifiche eseguite utilizzando la formula conservativa (6.2) §6.2.1 EN 1993-1-1:2005.

X	Comb.	Sfruttamento	Classe	NEd	NRd	Rid. NRd da VEd	Mx,Ed	Mx,Rd	Rid. Mx,Rd da VEd	Rid. Mx,Rd da NEd	ρx	ρy	Verifica
113.8	SLD 10	0.02	1	-1449.3	84315.5	1	-1470	596667	1		0	0	Si

Verifiche ad instabilità

Caratteristiche iniziali

Membratura principale per controllo snellezza; Calcolo di snellezze ed N critici condotti secondo gli assi principali;
Curva X: c; Curva Y: c;
Svergolamento: Nessuno; la verifica a instabilità flesso-torsionale (svergolamento) non verrà eseguita.

Dati per instabilità attorno a x

Numero rit.	Presente	Ascissa	Campata	βx/m	Vincolo a entrambi estremi	λx/m	λVer
1	Si	0					
			1-2	1	Si	29.5	Si, (<200)
2	Si	227.6					

Dati per instabilità attorno a y

Numero rit.	Presente	Ascissa	Campata	βy/n	k,LT	kw,LT	Vincolo a entrambi estremi
1	Si	0					
			1-2	1	Si	106.3	Si, (<200)
2	Si	227.6					

Verifica di stabilità per pressoflessione §C.4.2.4.1.3.3.1 NTC18

X	Comb.	Sfruttamento	Classe	NEd	MxEq,Ed	MyEq,Ed	Area	Wx	Wy	χ,min	λ adim. x/m	λ adim. y/n	N,crit x/m	N,crit y/n	Verifica
0	SLU 97	0.102	1	-2982.5	-10989	0	32.19	227.8	51.9	0.422	0.34	1.224	764699.9	59081.4	Si

Verifica di stabilità per pressoflessione SLD §C.4.2.4.1.3.3.1 NTC18

X	Comb.	Sfruttamento	Classe	NEd	MxEq,Ed	MyEq,Ed	Area	Wx	Wy	χ,min	λ adim. x/m	λ adim. y/n	N,crit x/m	N,crit y/n	Verifica
0	SLD 9	0.043	1	-1462	-1273	0	32.19	227.8	51.9	0.422	0.34	1.224	764699.9	59081.4	Si

Verifica di stabilità a taglio anima Y §4.2.4.1.2.4 [4.2.27] NTC18

η	hw	tw	hw/tw max	Verifica
1.2	17.2	0.9	55.46	Si

Verifica di stabilità a taglio anima Y SLD §4.2.4.1.2.4 [4.2.27] NTC18

η	hw	tw	hw/tw max	Verifica
1.2	17.2	0.9	55.46	Si

Verifiche a deformabilità

Mensola X: No; Mensola Y: No.

Frecce lungo X

Ascissa freccia	Combinazione	Freccia	Luce	L/f	L/f,min	Tipo	Verifica
189.7	SLE RA 1	0	227.6	10000	250	Totale	Si
174.5	SLE RA 31	0	227.6	10000	250	Totale	Si
189.7	SLE RA 30	0	227.6	10000	250	Totale	Si
174.5	SLE RA 29	0	227.6	10000	250	Totale	Si
189.7	SLE RA 28	0	227.6	10000	250	Totale	Si
174.5	SLE RA 2	0	227.6	10000	350	Variabile	Si
166.9	SLE RA 31	0	227.6	10000	350	Variabile	Si
182.1	SLE RA 30	0	227.6	10000	350	Variabile	Si
166.9	SLE RA 29	0	227.6	10000	350	Variabile	Si
182.1	SLE RA 28	0	227.6	10000	350	Variabile	Si

Frecce lungo Y

Ascissa freccia	Combinazione	Freccia	Luce	L/f	L/f,min	Tipo	Verifica
113.8	SLE RA 1	-0.002	227.6	10000	250	Totale	Si
113.8	SLE RA 31	-0.012	227.6	10000	250	Totale	Si
113.8	SLE RA 30	-0.012	227.6	10000	250	Totale	Si
113.8	SLE RA 29	-0.01	227.6	10000	250	Totale	Si
113.8	SLE RA 28	-0.01	227.6	10000	250	Totale	Si
174.5	SLE RA 2	0	227.6	10000	350	Variabile	Si
113.8	SLE RA 31	-0.01	227.6	10000	350	Variabile	Si
113.8	SLE RA 30	-0.01	227.6	10000	350	Variabile	Si
113.8	SLE RA 29	-0.008	227.6	10000	350	Variabile	Si
113.8	SLE RA 28	-0.008	227.6	10000	350	Variabile	Si

Superelemento in acciaio composto dall'asta 283

Caratteristiche del materiale

Acciaio: S275, fyk = 2750

Caratteristiche geometriche

Lunghezza: 227.6

Nodo iniziale: 6 Nodo finale: 29
Cerniera iniziale: Svincolo: M2, M3 Cerniera finale: Svincolo: M2, M3
Sovraresistenza: 0% Sisma Z: No

Caratteristiche della sezione

Sezione	Rotazione	Area	Jx	Jy	ix	iy	Wx	Wy	Wplx	Wply
UPN200	180	32.19	1911.41	147.68	7.71	2.14	191.14	26.92	227.82	51.87

Verifiche di resistenza

Verifiche a forza assiale §4.2.4.1.2.1 - §4.2.4.1.2.2 NTC18

X	Comb.	Sfruttamento	Classe	NEd	Nc,Rd	Nt,Rd	Riduzione da taglio	ρx	ρy	Verifica
0	SLU 131	0.058	1	-4930.6	84315.5		1	0	0	Si

Verifiche a forza assiale SLD §4.2.4.1.2.1 - §4.2.4.1.2.2 NTC18

X	Comb.	Sfruttamento	Classe	NEd	Nc,Rd	Nt,Rd	Riduzione da taglio	ρx	ρy	Verifica
0	SLD 11	0.025	1	-2068.6	84315.5		1	0	0	Si

Verifica a taglio Y §4.2.4.1.2.4 NTC18

X	Comb.	Sfruttamento	VEd	Vc,Rd	Av	Interazione taglio-torsione	Riduzione torsione	Verifica
0	SLU 98	0.009	-239.4	26064.2	17.24	Considerata	1	Si

Verifica a taglio Y SLD §4.2.4.1.2.4 NTC18

X	Comb.	Sfruttamento	VEd	Vc,Rd	Av	Interazione taglio-torsione	Riduzione torsione	Verifica
227.6	SLD 12	0.001	25.8	26039.5	17.24	Considerata	1	Si

Verifica a torsione §4.2.4.1.2.5 NTC18

X	Comb.	Sfruttamento torsione	TEd	TRd	Riduzione taglio resistente	Sfruttamento taglio-torsione	τEd,totale	τRd	Verifica
220	SLV 12	0.008	111.5	14125.9	Considerata				Si

Verifica a torsione SLD §4.2.4.1.2.5 NTC18

X	Comb.	Sfruttamento torsione	TEd	TRd	Riduzione taglio resistente	Sfruttamento taglio-torsione	τEd,totale	τRd	Verifica
106.2	SLD 12	0.003	46.1	14125.9	Considerata				Si

Verifica a presso/tenso flessione retta X §§ 4.2.4.1.2.3 - 4.2.4.1.2.6 - 4.2.4.1.2.7 - 4.2.4.1.2.8 NTC18

Verifiche eseguite utilizzando la formula conservativa (6.2) §6.2.1 EN 1993-1-1:2005.

X	Comb.	Sfruttamento	Classe	NEd	NRd	Rid. NRd da VEd	Mx,Ed	Mx,Rd	Rid. Mx,Rd da VEd	Rid. Mx,Rd da NEd	ρx	ρy	Verifica
98.6	SLU 98	0.078	1	-4820.3	84315.5	1	12507	596667	1		0	0	Si

Verifica a presso/tenso flessione retta X SLD §§ 4.2.4.1.2.3 - 4.2.4.1.2.6 - 4.2.4.1.2.7 - 4.2.4.1.2.8 NTC18

Verifiche eseguite utilizzando la formula conservativa (6.2) §6.2.1 EN 1993-1-1:2005.

X	Comb.	Sfruttamento	Classe	NEd	NRd	Rid. NRd da VEd	Mx,Ed	Mx,Rd	Rid. Mx,Rd da VEd	Rid. Mx,Rd da NEd	ρx	ρy	Verifica
113.8	SLD 12	0.027	1	-2055.9	84315.5	1	1470	596667	1		0	0	Si

Verifiche ad instabilità

Caratteristiche iniziali

Membratura principale per controllo snellezza; Calcolo di snellezze ed N critici condotti secondo gli assi principali;
Curva X: c; Curva Y: c;
Svergolamento: Nessuno; la verifica a instabilità flesso-torsionale (svergolamento) non verrà eseguita.

Dati per instabilità attorno a x

Numero rit.	Presente	Ascissa	Campata	βx/m	Vincolo a entrambi estremi	λx/m	λVer
1	Si	0					
			1-2	1	Si	29.5	Si, (<200)
2	Si	227.6					

Dati per instabilità attorno a y

Numero rit.	Presente	Ascissa	Campata	βy/n	k,LT	kw,LT	Vincolo a entrambi estremi
1	Si	0					
			1-2	1	Si	106.3	Si, (<200)
2	Si	227.6					

Verifica di stabilità per pressoflessione §C.4.2.4.1.3.3.1 NTC18

X	Comb.	Sfruttamento	Classe	NEd	MxEq,Ed	MyEq,Ed	Area	Wx	Wy	χ,min	λ adim. x/m	λ adim. y/n	N,crit x/m	N,crit y/n	Verifica
0	SLU 98	0.157	1	-4930.6	10988	0	32.19	227.8	51.9	0.422	0.34	1.224	764699.9	59081.4	Si

Verifica di stabilità per pressoflessione SLD §C.4.2.4.1.3.3.1 NTC18

X	Comb.	Sfruttamento	Classe	NEd	MxEq,Ed	MyEq,Ed	Area	Wx	Wy	χ,min	λ adim. x/m	λ adim. y/n	N,crit x/m	N,crit y/n	Verifica
0	SLD 11	0.06	1	-2068.6	1273	0	32.19	227.8	51.9	0.422	0.34	1.224	764699.9	59081.4	Si

Verifica di stabilità a taglio anima Y §4.2.4.1.2.4 [4.2.27] NTC18

η	hw	tw	hw/tw max	Verifica
1.2	17.2	0.9	55.46	Si

Verifica di stabilità a taglio anima Y SLD §4.2.4.1.2.4 [4.2.27] NTC18

η	hw	tw	hw/tw max	Verifica
1.2	17.2	0.9	55.46	Si

Verifiche a deformabilità

Mensola X: No; Mensola Y: No.

Frecce lungo X

Ascissa freccia	Combinazione	Freccia	Luce	L/f	L/f,min	Tipo	Verifica
212.4	SLE RA 1	0	227.6	10000	250	Totale	Si
212.4	SLE RA 31	0	227.6	10000	250	Totale	Si
212.4	SLE RA 30	0	227.6	10000	250	Totale	Si
212.4	SLE RA 29	0	227.6	10000	250	Totale	Si
212.4	SLE RA 28	0	227.6	10000	250	Totale	Si
204.8	SLE RA 2	0	227.6	10000	350	Variabile	Si
189.7	SLE RA 31	0	227.6	10000	350	Variabile	Si
189.7	SLE RA 30	0	227.6	10000	350	Variabile	Si
189.7	SLE RA 29	0	227.6	10000	350	Variabile	Si
189.7	SLE RA 28	0	227.6	10000	350	Variabile	Si

Frecce lungo Y

Ascissa freccia	Combinazione	Freccia	Luce	L/f	L/f,min	Tipo	Verifica
113.8	SLE RA 1	0.002	227.6	10000	250	Totale	Si
113.8	SLE RA 31	0.012	227.6	10000	250	Totale	Si
113.8	SLE RA 30	0.012	227.6	10000	250	Totale	Si
113.8	SLE RA 29	0.01	227.6	10000	250	Totale	Si
113.8	SLE RA 28	0.01	227.6	10000	250	Totale	Si
204.8	SLE RA 2	0	227.6	10000	350	Variabile	Si
113.8	SLE RA 31	0.01	227.6	10000	350	Variabile	Si
113.8	SLE RA 30	0.01	227.6	10000	350	Variabile	Si
113.8	SLE RA 29	0.008	227.6	10000	350	Variabile	Si
113.8	SLE RA 28	0.008	227.6	10000	350	Variabile	Si

Superelemento in acciaio composto dall'asta 284

Caratteristiche del materiale

Acciaio: S275, fyk = 2750

Caratteristiche geometriche

Lunghezza: 227.6
Nodo iniziale: 4 Nodo finale: 33
Cerniera iniziale: Svincolo: M2, M3 Cerniera finale: Svincolo: M2, M3
Sovraresistenza: 0% Sisma Z: No

Caratteristiche della sezione

Sezione	Rotazione	Area	Jx	Jy	ix	iy	Wx	Wy	Wplx	Wply
UPN200	0	32.19	1911.41	147.68	7.71	2.14	191.14	26.92	227.82	51.87

Verifiche di resistenza

Verifiche a forza assiale §4.2.4.1.2.1 - §4.2.4.1.2.2 NTC18

X	Comb.	Sfruttamento	Classe	NEd	Nc,Rd	Nt,Rd	Riduzione da taglio	ρx	ρy	Verifica
0	SLU 97	0.06	1	-5019.1	84315.5		1	0	0	Si

Verifiche a forza assiale SLD §4.2.4.1.2.1 - §4.2.4.1.2.2 NTC18

X	Comb.	Sfruttamento	Classe	NEd	Nc,Rd	Nt,Rd	Riduzione da taglio	ρx	ρy	Verifica
0	SLD 9	0.032	1	-2661.4	84315.5		1	0	0	Si

Verifica a taglio Y §4.2.4.1.2.4 NTC18

X	Comb.	Sfruttamento	VEd	Vc,Rd	Av	Interazione taglio-torsione	Riduzione torsione	Verifica
0	SLU 132	0.009	239.4	26073.6	17.24	Considerata	1	Si

Verifica a taglio Y SLD §4.2.4.1.2.4 NTC18

X	Comb.	Sfruttamento	VEd	Vc,Rd	Av	Interazione taglio-torsione	Riduzione torsione	Verifica
227.6	SLD 10	0.001	-25.8	26039.5	17.24	Considerata	1	Si

Verifica a torsione §4.2.4.1.2.5 NTC18

X	Comb.	Sfruttamento torsione	TEd	TRd	Riduzione taglio resistente	Sfruttamento taglio-torsione	τEd,totale	τRd	Verifica
227.6	SLV 10	0.008	-110.8	14125.9	Considerata				Si

Verifica a torsione SLD §4.2.4.1.2.5 NTC18

X	Comb.	Sfruttamento torsione	TEd	TRd	Riduzione taglio resistente	Sfruttamento taglio-torsione	τEd,totale	τRd	Verifica
121.4	SLD 9	0.003	-46	14125.9	Considerata				Si

Verifica a presso/tenso flessione retta X §§ 4.2.4.1.2.3 - 4.2.4.1.2.6 - 4.2.4.1.2.7 - 4.2.4.1.2.8 NTC18

Verifiche eseguite utilizzando la formula conservativa (6.2) §6.2.1 EN 1993-1-1:2005.

X	Comb.	Sfruttamento	Classe	NEd	NRd	Rid. NRd da VEd	Mx,Ed	Mx,Rd	Rid. Mx,Rd da VEd	Rid. Mx,Rd da NEd	ρx	ρy	Verifica
98.6	SLU 97	0.079	1	-4908.9	84315.5	1	-12501	596667	1		0	0	Si

Verifica a presso/tenso flessione retta X SLD §§ 4.2.4.1.2.3 - 4.2.4.1.2.6 - 4.2.4.1.2.7 - 4.2.4.1.2.8 NTC18

Verifiche eseguite utilizzando la formula conservativa (6.2) §6.2.1 EN 1993-1-1:2005.

X	Comb.	Sfruttamento	Classe	NEd	NRd	Rid. NRd da VEd	Mx,Ed	Mx,Rd	Rid. Mx,Rd da VEd	Rid. Mx,Rd da NEd	ρx	ρy	Verifica
113.8	SLD 9	0.034	1	-2648.7	84315.5	1	-1470	596667	1		0	0	Si

Verifiche ad instabilità

Caratteristiche iniziali

Membratura principale per controllo snellezza; Calcolo di snellezze ed N critici condotti secondo gli assi principali;
Curva X: c; Curva Y: c;
Svergolamento: Nessuno; la verifica a instabilità flesso-torsionale (svergolamento) non verrà eseguita.

Dati per instabilità attorno a x

Numero rit.	Presente	Ascissa	Campata	βx/m	Vincolo a entrambi estremi	λx/m	λVer
1	Si	0					
			1-2	1	Si	29.5	Si, (<200)
2	Si	227.6					

Dati per instabilità attorno a y

Numero rit.	Presente	Ascissa	Campata	βy/n	k,LT	kw,LT	Vincolo a entrambi estremi
1	Si	0					
			1-2	1	Si	106.3	Si, (<200)
2	Si	227.6					

Verifica di stabilità per pressoflessione §C.4.2.4.1.3.3.1 NTC18

X	Comb.	Sfruttamento	Classe	NEd	MxEq,Ed	MyEq,Ed	Area	Wx	Wy	χ,min	λ adim. x/m	λ adim. y/n	N,crit x/m	N,crit y/n	Verifica
0	SLU 130	0.159	1	-5019.1	-10979	0	32.19	227.8	51.9	0.422	0.34	1.224	764699.9	59081.4	Si

Verifica di stabilità per pressoflessione SLD §C.4.2.4.1.3.3.1 NTC18

X	Comb.	Sfruttamento	Classe	NEd	MxEq,Ed	MyEq,Ed	Area	Wx	Wy	χ,min	λ adim. x/m	λ adim. y/n	N,crit x/m	N,crit y/n	Verifica
0	SLD 9	0.077	1	-2661.4	-1273	0	32.19	227.8	51.9	0.422	0.34	1.224	764699.9	59081.4	Si

Verifica di stabilità a taglio anima Y §4.2.4.1.2.4 [4.2.27] NTC18

η	hw	tw	hw/tw max	Verifica
1.2	17.2	0.9	55.46	Si

Verifica di stabilità a taglio anima Y SLD §4.2.4.1.2.4 [4.2.27] NTC18

η	hw	tw	hw/tw max	Verifica
1.2	17.2	0.9	55.46	Si

Verifiche a deformabilità

Mensola X: No; Mensola Y: No.

Frecce lungo X

Ascissa freccia	Combinazione	Freccia	Luce	L/f	L/f,min	Tipo	Verifica
220	SLE RA 1	0	227.6	10000	250	Totale	Si
189.7	SLE RA 31	0	227.6	10000	250	Totale	Si
189.7	SLE RA 30	0	227.6	10000	250	Totale	Si
189.7	SLE RA 29	0	227.6	10000	250	Totale	Si
189.7	SLE RA 28	0	227.6	10000	250	Totale	Si
197.3	SLE RA 2	0	227.6	10000	350	Variabile	Si
197.3	SLE RA 31	0	227.6	10000	350	Variabile	Si
197.3	SLE RA 30	0	227.6	10000	350	Variabile	Si
197.3	SLE RA 29	0	227.6	10000	350	Variabile	Si
197.3	SLE RA 28	0	227.6	10000	350	Variabile	Si

Frecce lungo Y

Ascissa freccia	Combinazione	Freccia	Luce	L/f	L/f,min	Tipo	Verifica
113.8	SLE RA 1	-0.002	227.6	10000	250	Totale	Si
113.8	SLE RA 31	-0.012	227.6	10000	250	Totale	Si
113.8	SLE RA 30	-0.012	227.6	10000	250	Totale	Si
113.8	SLE RA 29	-0.01	227.6	10000	250	Totale	Si
113.8	SLE RA 28	-0.01	227.6	10000	250	Totale	Si
220	SLE RA 2	0	227.6	10000	350	Variabile	Si
113.8	SLE RA 31	-0.01	227.6	10000	350	Variabile	Si
113.8	SLE RA 30	-0.01	227.6	10000	350	Variabile	Si
113.8	SLE RA 29	-0.008	227.6	10000	350	Variabile	Si
113.8	SLE RA 28	-0.008	227.6	10000	350	Variabile	Si

Superelemento in acciaio composto dall'asta 285

Caratteristiche del materiale

Acciaio: S275, fyk = 2750

Caratteristiche geometriche

Lunghezza: 227.6
Nodo iniziale: 4 Nodo finale: 24
Cerniera iniziale: Svincolo: M2, M3 Cerniera finale: Svincolo: M2, M3
Sovraresistenza: 0% Sisma Z: No

Caratteristiche della sezione

Sezione	Rotazione	Area	Jx	Jy	ix	iy	Wx	Wy	Wplx	Wply
UPN200	180	32.19	1911.41	147.68	7.71	2.14	191.14	26.92	227.82	51.87

Verifiche di resistenza

Verifiche a forza assiale §4.2.4.1.2.1 - §4.2.4.1.2.2 NTC18

X	Comb.	Sfruttamento	Classe	NEd	Nc,Rd	Nt,Rd	Riduzione da taglio	ρx	ρy	Verifica
0	SLU 98	0.032	1	-2660.1	84315.5		1	0	0	Si

Verifiche a forza assiale SLD §4.2.4.1.2.1 - §4.2.4.1.2.2 NTC18

X	Comb.	Sfruttamento	Classe	NEd	Nc,Rd	Nt,Rd	Riduzione da taglio	ρx	ρy	Verifica
0	SLD 12	0.018	1	-1545.5	84315.5		1	0	0	Si

Verifica a taglio Y §4.2.4.1.2.4 NTC18

X	Comb.	Sfruttamento	VEd	Vc,Rd	Av	Interazione taglio-torsione	Riduzione torsione	Verifica
0	SLU 96	0.009	-239.5	26073.6	17.24	Considerata	1	Si

Verifica a taglio Y SLD §4.2.4.1.2.4 NTC18

X	Comb.	Sfruttamento	VEd	Vc,Rd	Av	Interazione taglio-torsione	Riduzione torsione	Verifica
227.6	SLD 12	0.001	25.8	26038.1	17.24	Considerata	1	Si

Verifica a torsione §4.2.4.1.2.5 NTC18

X	Comb.	Sfruttamento torsione	TEd	TRd	Riduzione taglio resistente	Sfruttamento taglio-torsione	τEd,totale	τRd	Verifica
113.8	SLV 12	0.008	112.8	14125.9	Considerata				Si

Verifica a torsione SLD §4.2.4.1.2.5 NTC18

X	Comb.	Sfruttamento torsione	TEd	TRd	Riduzione taglio resistente	Sfruttamento taglio-torsione	τEd,totale	τRd	Verifica
212.4	SLD 12	0.003	48	14125.9	Considerata				Si

Verifica a presso/tenso flessione retta X §§ 4.2.4.1.2.3 - 4.2.4.1.2.6 - 4.2.4.1.2.7 - 4.2.4.1.2.8 NTC18

Verifiche eseguite utilizzando la formula conservativa (6.2) §6.2.1 EN 1993-1-1:2005.

X	Comb.	Sfruttamento	Classe	NEd	NRd	Rid. NRd da VEd	Mx,Ed	Mx,Rd	Rid. Mx,Rd da VEd	Rid. Mx,Rd da NEd	ρx	ρy	Verifica
98.6	SLU 98	0.051	1	-2549.9	84315.5	1	12510	596667	1		0	0	Si

Verifica a presso/tenso flessione retta X SLD §§ 4.2.4.1.2.3 - 4.2.4.1.2.6 - 4.2.4.1.2.7 - 4.2.4.1.2.8 NTC18

Verifiche eseguite utilizzando la formula conservativa (6.2) §6.2.1 EN 1993-1-1:2005.

X	Comb.	Sfruttamento	Classe	NEd	NRd	Rid. NRd da VEd	Mx,Ed	Mx,Rd	Rid. Mx,Rd da VEd	Rid. Mx,Rd da NEd	ρx	ρy	Verifica
113.8	SLD 12	0.021	1	-1532.8	84315.5	1	1470	596667	1		0	0	Si

Verifiche ad instabilità

Caratteristiche iniziali

Membratura principale per controllo snellezza; Calcolo di snellezze ed N critici condotti secondo gli assi principali;
Curva X: c; Curva Y: c;
Svergolamento: Nessuno; la verifica a instabilità flesso-torsionale (svergolamento) non verrà eseguita.

Dati per instabilità attorno a x

Numero rit.	Presente	Ascissa	Campata	βx/m	Vincolo a entrambi estremi	λx/m	λVer
1	Si	0					
			1-2	1	Si	29.5	Si, (<200)
2	Si	227.6					

Dati per instabilità attorno a y

Numero rit.	Presente	Ascissa	Campata	βy/n	k,LT	kw,LT	Vincolo a entrambi estremi
1	Si	0					
			1-2	1	Si	106.3	Si, (<200)
2	Si	227.6					

Verifica di stabilità per pressoflessione §C.4.2.4.1.3.3.1 NTC18

X	Comb.	Sfruttamento	Classe	NEd	MxEq,Ed	MyEq,Ed	Area	Wx	Wy	χ,min	λ adim. x/m	λ adim. y/n	N,crit x/m	N,crit y/n	Verifica
0	SLU 98	0.093	1	-2660.1	10991	0	32.19	227.8	51.9	0.422	0.34	1.224	764699.9	59081.4	Si

Verifica di stabilità per pressoflessione SLD §C.4.2.4.1.3.3.1 NTC18

X	Comb.	Sfruttamento	Classe	NEd	MxEq,Ed	MyEq,Ed	Area	Wx	Wy	χ,min	λ adim. x/m	λ adim. y/n	N,crit x/m	N,crit y/n	Verifica
0	SLD 12	0.046	1	-1545.5	1273	0	32.19	227.8	51.9	0.422	0.34	1.224	764699.9	59081.4	Si

Verifica di stabilità a taglio anima Y §4.2.4.1.2.4 [4.2.27] NTC18

η	hw	tw	hw/tw max	Verifica
1.2	17.2	0.9	55.46	Si

Verifica di stabilità a taglio anima Y SLD §4.2.4.1.2.4 [4.2.27] NTC18

η	hw	tw	hw/tw max	Verifica
1.2	17.2	0.9	55.46	Si

Verifiche a deformabilità

Mensola X: No; Mensola Y: No.

Frecce lungo X

Ascissa freccia	Combinazione	Freccia	Luce	L/f	L/f,min	Tipo	Verifica
212.4	SLE RA 1	0	227.6	10000	250	Totale	Si
182.1	SLE RA 31	0	227.6	10000	250	Totale	Si
182.1	SLE RA 30	0	227.6	10000	250	Totale	Si
182.1	SLE RA 29	0	227.6	10000	250	Totale	Si
182.1	SLE RA 28	0	227.6	10000	250	Totale	Si
159.3	SLE RA 2	0	227.6	10000	350	Variabile	Si

Ascissa freccia	Combinazione	Freccia	Luce	L/f	L/f,min	Tipo	Verifica
197.3	SLE RA 31	0	227.6	10000	350	Variabile	Si
197.3	SLE RA 30	0	227.6	10000	350	Variabile	Si
197.3	SLE RA 29	0	227.6	10000	350	Variabile	Si
197.3	SLE RA 28	0	227.6	10000	350	Variabile	Si

Frecce lungo Y

Ascissa freccia	Combinazione	Freccia	Luce	L/f	L/f,min	Tipo	Verifica
113.8	SLE RA 1	0.002	227.6	10000	250	Totale	Si
113.8	SLE RA 31	0.012	227.6	10000	250	Totale	Si
113.8	SLE RA 30	0.012	227.6	10000	250	Totale	Si
113.8	SLE RA 29	0.01	227.6	10000	250	Totale	Si
113.8	SLE RA 28	0.01	227.6	10000	250	Totale	Si
220	SLE RA 2	0	227.6	10000	350	Variabile	Si
113.8	SLE RA 31	0.01	227.6	10000	350	Variabile	Si
113.8	SLE RA 30	0.01	227.6	10000	350	Variabile	Si
113.8	SLE RA 29	0.008	227.6	10000	350	Variabile	Si
113.8	SLE RA 28	0.008	227.6	10000	350	Variabile	Si

Superelemento in acciaio composto dall'asta 286

Caratteristiche del materiale

Acciaio: S275, fyk = 2750

Caratteristiche geometriche

Lunghezza: 227.6
Nodo iniziale: 2 Nodo finale: 29
Cerniera iniziale: Svincolo: M2, M3 Cerniera finale: Svincolo: M2, M3
Sovraresistenza: 0% Sisma Z: No

Caratteristiche della sezione

Sezione	Rotazione	Area	Jx	Jy	ix	iy	Wx	Wy	Wplx	Wply
UPN200	0	32.19	1911.41	147.68	7.71	2.14	191.14	26.92	227.82	51.87

Verifiche di resistenza

Verifiche a forza assiale §4.2.4.1.2.1 - §4.2.4.1.2.2 NTC18

X	Comb.	Sfruttamento	Classe	NEd	Nc,Rd	Nt,Rd	Riduzione da taglio	ρx	ρy	Verifica
0	SLU 130	0.078	1	-6538.7	84315.5		1	0	0	Si

Verifiche a forza assiale SLD §4.2.4.1.2.1 - §4.2.4.1.2.2 NTC18

X	Comb.	Sfruttamento	Classe	NEd	Nc,Rd	Nt,Rd	Riduzione da taglio	ρx	ρy	Verifica
0	SLD 9	0.035	1	-2939.1	84315.5		1	0	0	Si

Verifica a taglio Y §4.2.4.1.2.4 NTC18

X	Comb.	Sfruttamento	VEd	Vc,Rd	Av	Interazione taglio-torsione	Riduzione torsione	Verifica
0	SLU 129	0.009	239.4	26061	17.24	Considerata	1	Si

Verifica a taglio Y SLD §4.2.4.1.2.4 NTC18

X	Comb.	Sfruttamento	VEd	Vc,Rd	Av	Interazione taglio-torsione	Riduzione torsione	Verifica
227.6	SLD 10	0.001	-25.8	26036.7	17.24	Considerata	1	Si

Verifica a torsione §4.2.4.1.2.5 NTC18

X	Comb.	Sfruttamento torsione	TEd	TRd	Riduzione taglio resistente	Sfruttamento taglio-torsione	τEd,totale	τRd	Verifica
0	SLV 10	0.008	-119.6	14125.9	Considerata				Si

Verifica a torsione SLD §4.2.4.1.2.5 NTC18

X	Comb.	Sfruttamento torsione	TEd	TRd	Riduzione taglio resistente	Sfruttamento taglio-torsione	τEd,totale	τRd	Verifica
121.4	SLD 9	0.004	-49.9	14125.9	Considerata				Si

Verifica a presso/tenso flessione retta X §§ 4.2.4.1.2.3 - 4.2.4.1.2.6 - 4.2.4.1.2.7 - 4.2.4.1.2.8 NTC18

Verifiche eseguite utilizzando la formula conservativa (6.2) §6.2.1 EN 1993-1-1:2005.

X	Comb.	Sfruttamento	Classe	NEd	NRd	Rid. NRd da VEd	Mx,Ed	Mx,Rd	Rid. Mx,Rd da VEd	Rid. Mx,Rd da NEd	ρx	ρy	Verifica
98.6	SLU 130	0.097	1	-6428.4	84315.5	1	-12507	596667	1		0	0	Si

Verifica a presso/tenso flessione retta X SLD §§ 4.2.4.1.2.3 - 4.2.4.1.2.6 - 4.2.4.1.2.7 - 4.2.4.1.2.8 NTC18

Verifiche eseguite utilizzando la formula conservativa (6.2) §6.2.1 EN 1993-1-1:2005.

X	Comb.	Sfruttamento	Classe	NEd	NRd	Rid. NRd da VEd	Mx,Ed	Mx,Rd	Rid. Mx,Rd da VEd	Rid. Mx,Rd da NEd	ρx	ρy	Verifica
113.8	SLD 9	0.037	1	-2926.5	84315.5	1	-1470	596667	1		0	0	Si

Verifiche ad instabilità

Caratteristiche iniziali

Membratura principale per controllo snellezza; Calcolo di snellezze ed N critici condotti secondo gli assi principali;
Curva X: c; Curva Y: c;
Svergolamento: Nessuno; la verifica a instabilità flesso-torsionale (svergolamento) non verrà eseguita.

Dati per instabilità attorno a x

Numero rit.	Presente	Ascissa	Campata	βx/m	Vincolo a entrambi estremi	λx/m	λVer
1	Si	0					
			1-2	1	Si	29.5	Si, (<200)
2	Si	227.6					

Dati per instabilità attorno a y

Numero rit.	Presente	Ascissa	Campata	βy/n	k,LT	kw,LT	Vincolo a entrambi estremi
1	Si	0					
			1-2	1	Si	106.3	Si, (<200)
2	Si	227.6					

Verifica di stabilità per pressoflessione §C.4.2.4.1.3.3.1 NTC18

X	Comb.	Sfruttamento	Classe	NEd	MxEq,Ed	MyEq,Ed	Area	Wx	Wy	χ,min	λ adim. x/m	λ adim. y/n	N,crit x/m	N,crit y/n	Verifica
0	SLU 130	0.202	1	-6538.7	-10988	0	32.19	227.8	51.9	0.422	0.34	1.224	764699.9	59081.4	Si

Verifica di stabilità per pressoflessione SLD §C.4.2.4.1.3.3.1 NTC18

X	Comb.	Sfruttamento	Classe	NEd	MxEq,Ed	MyEq,Ed	Area	Wx	Wy	χ,min	λ adim. x/m	λ adim. y/n	N,crit x/m	N,crit y/n	Verifica
0	SLD 9	0.085	1	-2939.1	-1273	0	32.19	227.8	51.9	0.422	0.34	1.224	764699.9	59081.4	Si

Verifica di stabilità a taglio anima Y §4.2.4.1.2.4 [4.2.27] NTC18

η	hw	tw	hw/tw max	Verifica
1.2	17.2	0.9	55.46	Si

Verifica di stabilità a taglio anima Y SLD §4.2.4.1.2.4 [4.2.27] NTC18

η	hw	tw	hw/tw max	Verifica
1.2	17.2	0.9	55.46	Si

Verifiche a deformabilità

Mensola X: No; Mensola Y: No.

Frecce lungo X

Ascissa freccia	Combinazione	Freccia	Luce	L/f	L/f,min	Tipo	Verifica
212.4	SLE RA 1	0	227.6	10000	250	Totale	Si
197.3	SLE RA 31	0	227.6	10000	250	Totale	Si
197.3	SLE RA 30	0	227.6	10000	250	Totale	Si
197.3	SLE RA 29	0	227.6	10000	250	Totale	Si
197.3	SLE RA 28	0	227.6	10000	250	Totale	Si
166.9	SLE RA 2	0	227.6	10000	350	Variabile	Si
220	SLE RA 31	0	227.6	10000	350	Variabile	Si
220	SLE RA 30	0	227.6	10000	350	Variabile	Si
220	SLE RA 29	0	227.6	10000	350	Variabile	Si
220	SLE RA 28	0	227.6	10000	350	Variabile	Si

Frecce lungo Y

Ascissa freccia	Combinazione	Freccia	Luce	L/f	L/f,min	Tipo	Verifica
113.8	SLE RA 1	-0.002	227.6	10000	250	Totale	Si
113.8	SLE RA 31	-0.012	227.6	10000	250	Totale	Si
113.8	SLE RA 30	-0.012	227.6	10000	250	Totale	Si
113.8	SLE RA 29	-0.01	227.6	10000	250	Totale	Si
113.8	SLE RA 28	-0.01	227.6	10000	250	Totale	Si
182.1	SLE RA 2	0	227.6	10000	350	Variabile	Si
113.8	SLE RA 31	-0.01	227.6	10000	350	Variabile	Si
113.8	SLE RA 30	-0.01	227.6	10000	350	Variabile	Si
113.8	SLE RA 29	-0.008	227.6	10000	350	Variabile	Si
113.8	SLE RA 28	-0.008	227.6	10000	350	Variabile	Si